ADVANCED
PNEUMATIC
INDUSTRIES

GENERAL CATALOGUE

2024



Proudly made in **Italy**

api-pneumatic.com

ADVANCED
PNEUMATIC
INDUSTRIES

Company with certified quality system

UNI EN ISO 9001 : 2015

is a registered trademark owned by A.P.I. S.r.l.



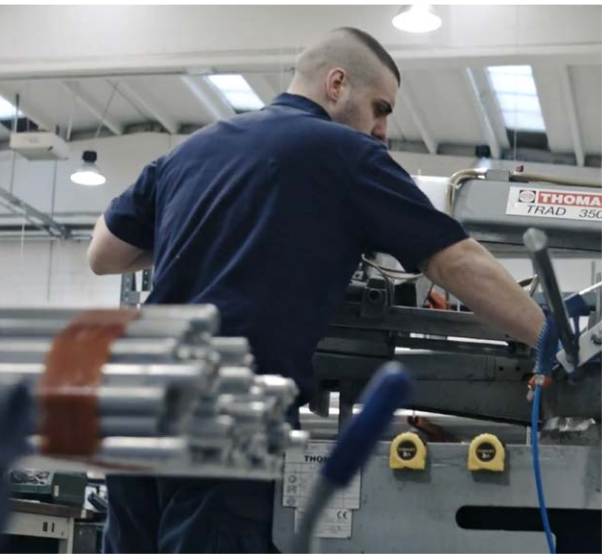



MANUFACTURED TO BE

BOLD
DECISIVE
UNIQUE





Proudly made in **Italy**



AIR POWER CONTROL

IL CONTROLLO DELL'ARIA È POTERE

A.P.I. is an Italian company specialised in the design and production of industrial pneumatic components.
Since our start in 1987, company was built with a distinctive international printing and gained an increasingly important role in the market.
The innovation, design and technology of our products guarantee our customers not just with a product but excellence in the industry. We provide solutions to specific needs and offer customised products tailored to each application area.

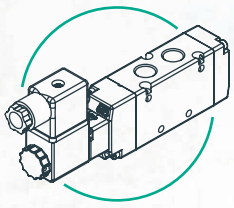

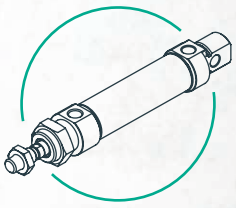

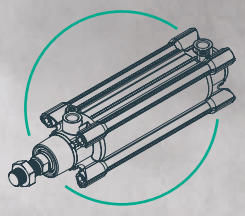

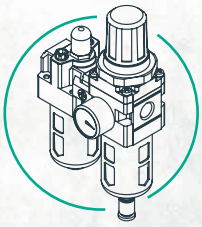

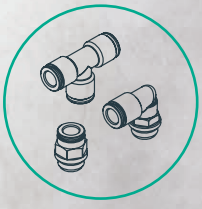


API
TM
api-pneumatic.com

Introduction
General index

Introduction	
General index	from page I.1
General technical information	from page II.1
2014/34/EU ATEX Directive	from page III.1
Key products	from page V.1



Cylinders	da pag. I.1
General informations	from page 1.1.1
Cylinders conforming to standards	from page 1.2.1
Cylinders not conforming to standards	from page 1.10.1
Rotary cylinders and actuators	from page 1.40.1
Hand grips	from page 1.60.1
Accessories for cylinders	from page 1.70.1
Mounting for cylinders	from page 1.94.1



Valves	da pag. 2.I
General informations	from page 2.1.1
Solenoid and air operated valves	from page 2.5.1
Manual and mechanical operated valves	from page 2.150.1
Ancillary valves	from page 2.250.1
Coils and connectors	from page 2.315.1
Actuators, valves and accessories	from page 2.400.1

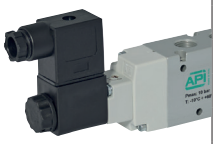

Air treatment	da pag. 3.I
General informations	from page 3.1.1
Modular units	from page 3.2.1
F-R-L units 1-1/2" and 2"	from page 3.6.1
Microregulators	from page 3.10.1
Pressure-gauges, vacuum-gauges and pressure switches	from page 3.30.1
End-of-line components	from page 3.40.1
Mounting accessories	from page 3.90.1



Accessories	da pag. 4.I
Fittings and couplings	from page 4.2.1
System accessories	from page 4.55.1
Air-reservoirs	from page 4.70.1
Flow and exhaust regulators	from page 4.90.1
Accessories with integrated function	from page 4.120.1
Silencers	from page 4.150.1
Exhaust conveyors	from page 4.170.1



Stainless Steel components	da pag. 5.I
Stainless Steel cylinders	from page 5.2.1
Stainless Steel rod accessories for cylinders	from page 5.50.1
Stainless Steel mountings for cylinders	from page 5.70.1
Stainless Steel valves	from page 5.102.1
Stainless Steel modular units	from page 5.202.1
Stainless Steel fittings and couplings	from page 5.302.1
Stainless Steel air-reservoirs	from page 5.350.1
Stainless Steel flow and exhaust regulators	from page 5.370.1
Stainless Steel accessories with integrated functions	from page 5.380.1
Stainless Steel silencers	from page 5.390.1



Physical magnitudes and data

The pneumatic components use compressed air. Pressure is a force that is applied per unit of area. The pressure can be measured with an instrument - the manometer - is called manometric or relative to the atmospheric pressure in which the instrument is placed. Absolute pressure is obtained by adding atmospheric pressure to the manometric pressure.

Units of measurement - International System (SI)

The SI units were introduced in the majority of Countries on the basis of international conventions. The aim is to achieve sole units of measurement in order to avoid the difficult conversions from one system of measurement to another.

The SI system consider seven fundamental physical magnitudes with their respective units of measurement. All the other units are derived from these.

The fundamental units are:

length in meters [m], mass in kilograms [Kg], time in seconds [s], electrical current in amperes [A], temperature in degrees Kelvin [°K], molecular quantity in moles [mol], luminous intensity in candelas [cd].

Forces are derived magnitudes and are expressed in Newtons [N]. According to the fundamental law of dynamics, one Newton is the force required to accelerate a mass of 1 Kg to 1 m/s^2. As 1 Kp is the force required to give a mass of 1 Kg the acceleration of gravity, which is equivalent to 9.81 m/s^2, it follows that 1 Kp = 9.81 N = 10 N (approximately).

Indeed, the latter value is assumed in order to avoid an excessive precision of calculation. Pressure is thus measured in N/m2, a unit known as the Pascal [Pa]. The unit of measurement that is equivalent to 100x103 Pa [bar] is still accepted. We can write 1 bar = 100 KPa.

SI units

Magnitude	Symbol of formula	SI units			Accepted measurement units		Conversion factors
		Name	Unit	Multiple	Name	Unit	
Lenght	l	Meter	m	km cm mm	-	-	-
Area	A	Square meter	m^2	cm^2 mm^2	Are Hectare	a ha	1 a = 102 m^2 1 ha = 104 m^2 (used only for land)
Volume	V	Cubic meter	m^3	cm^3 mm^3	Litre	l	1 l = dm^3 = 0,001 m^3
Mass	m	Kilogram	kg	Mg g mg	Ton	t	1 t = 1000 kg = 1 Mg
Time	t	Second	s	-	Minute Hour Day	min h d	1 min = 60 s 1 h = 60 min = 3600 s 1 d = 24 h = 86400 s
Numbers of revolutions	n	Revs per second	1/s s^{-1}	-	Revs per second	1/min min^{-1}	1/min = $\frac{1}{60}$ s
Speed	v	Meter per second	m/s	-	Kilometre per hour	km/h	1 km/h = $\frac{1}{3,6}$ m/s
Flow	V	Cubic meter per second	m^3/s	m^3/h l/min l/s	-	-	1 m^3/h = 16,67 l/min = 0,28 l/s 1 m^3/s = 60.000 l/min
Force	F	Newton	N	-	-	-	1 N = 1 kg m/s^2 1 kp = 9,81 N = 10 N 1 kp = 1 da N
Pressure	P	Newton per square meter Pascal	N/m^2 Pa	-	Bar	bar	1 N/m^2 = 1 Pa 1 bar = 105 Pa
Energy Work Quantity of calories	W	Joule	J	-	Kilowatt-hour	kWh	1 J = 1 Nm = 1 Ws = 1 kg m^2/s^2 1 kWh = 3,6 Mj
Momentum, torque	M	Newton-meter	Nm	-	-	-	1 kpm = 9,81 Nm
Pressure Energy absorption Heat absorption	P	Watt	W	-	-	-	1 W = 1 J/s = 1 Nm/s 1 kpm/s = 9,81 W
Dynamic viscosity	η (μ)	Pascal-second	Pas	-	-	-	1 Pas = 1 Ns/m^2 = 1000 mPas 1 cp = 1 mPas
Kinetic viscosity	υ	Square meter per second	m^2/s	-	-	-	1 cST = 10^{-6} m^2/s 1 cSt = 1 mm^2/s
Temperature	-	Kelvin degree	°k	-	Centrigrade degree	°C	-
Frequency	f	Hertz	Hz	-	-	-	-

Volume in normal conditions

The following are considered normal conditions of the fluid: temperature °K = 273 + 20°C, pressure = 1 bar.

For the following considerations, the equation of state of perfect gases is also accepted as valid for the actual air gas.

This is: PV = nRT where P = absolute pressure of the gas [bar]

V = volume [m^3],

T = absolute temperature [°K],

Assuming that we wish to bring a given volume of air V1, subject to pressure P1 and temperature T1 back to the normal conditions P0, V0, T0.

We can say that the situation will pass from P1V1 = nRT1 to P0V0 = nRT0.

Therefore, P1V1/T1 = P0V0/T0, from which it follows that:

V0 = (P1/P0) x (TO/T1)

In normal conditions volume is directly proportional to the pressure ratio and inversely the temperature ratio. As the latter are expressed as 273 + °C, the influence of their ratio is negligible, consequently we normally consider:

V0 = (P1/P0) x V1 [Nm^3].

Table of symbols

Symbol	Meaning
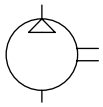	Compressor
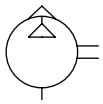	Vacuum pump
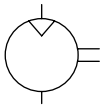	Pneumatic motor with one direction of rotation
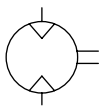	Pneumatic motor with two direction of rotation
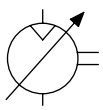	Pneumatic motor with one direction of rotation and variable displacement volume
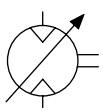	Pneumatic motor with two direction of rotation and variable displacement volume
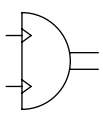	Rotary cylinder
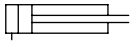	Single acting cylinder with return by external force

Symbol	Meaning
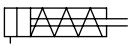	Single acting cylinde spring return
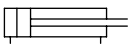	Double acting cylinder
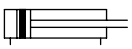	Double acting cylinder with permanent magnet
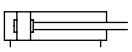	Double acting cylinder with dampers at both ends
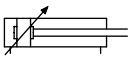	Double acting cylinder with adjustable cushionings at both ends
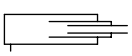	Single acting telescopic cylinder
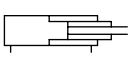	Double acting telescopic cylinder
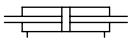	Double acting cylinder with through rod

Symbol	Meaning
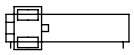	Double acting magnetic cylinder (piston - mobile equipment)
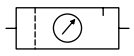	Conditioning unit F.R.L. (filter, regulator, lubricator)
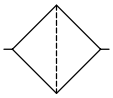	Filter
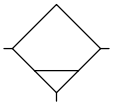	Manually operated water separator
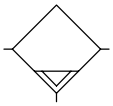	Water separator with automatic drain
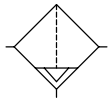	Filter with water separator (with automatic drain)
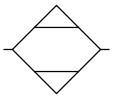	Air dryer
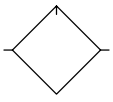	Lubricator

Table of symbols

Symbol	Meaning
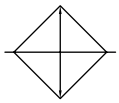	Cooler (with representation of the cooling pipes)
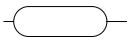	Vessel (air-reservoir)
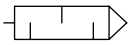	Silencer
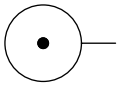	Pressure source
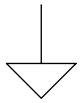	Exhaust
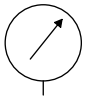	Pressure gauge
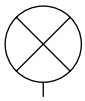	Visual display
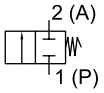	2/2-way valve N.C. (two ports, closed in neutral position)
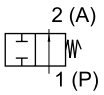	2/2-way valve N.O. (two ports, flow in neutral position)
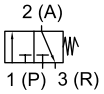	3/2-way valve N.C. (in 1st switch position inlet is closed)
	3/2-way valve N.O. (in the 2nd position air is exhausted or the return flow line is closed)
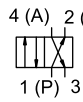	4/2-way valve (with two open positions and one exhaust)
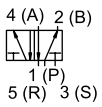	5/2-way valve (with two open positions and two exhausts)

Symbol	Meaning
	3/3-way valve with closed neutral position
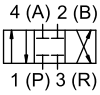	4/3-way valve with closed neutral position
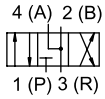	4/3-way valve exhausting in neutral position
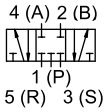	5/3-way valve with closed neutral position
	5/3-way valve with exhausting neutral position
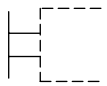	General manual operation (without specifying type of control)
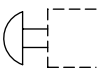	Manual operation by pushbutton
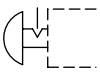	Manual operation by pushbutton with mechanical grip
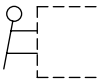	Manual operation by lever
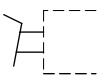	Manual operation by pedal
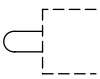	Mechanical operation by stem or key
	Mechanical operation by spring
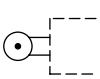	Mechanical operation by roller

Symbol	Meaning
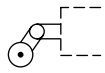	Mechanical operation by uni-directional roller
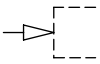	Pneumatic operation with pressure
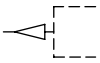	Pneumatic operation with pressure exhaust
	Pneumatic operation by different control surfaces (in the symbol the larger rectangle represents the larger control surface)
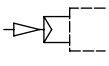	Pneumatic operation with pressure to the pilot
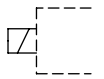	Electrical operation
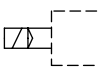	Combined operation by solenoid and pilot valve
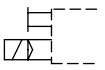	Combined operation: by solenoid, pilot valve and generic manual
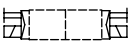	Generically electrical and manual operation and piloted at both ends: two stable positions
	Generically electric and manual operation and piloted for three position valve
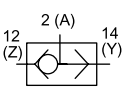	Shuttle valve ("OR" type)
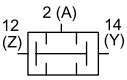	Two pressure valve ("AND" type)
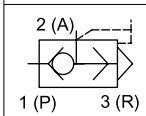	Quick-exhaust valve

Table of symbols

Symbol	Meaning
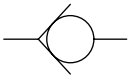	Non-return valve without spring
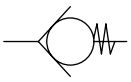	Non-return valve with spring
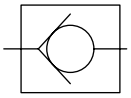	Piloted non-return valve
	Flow restrictor with constant section
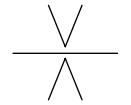	Diaphragm flow restrictor with constant section
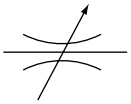	Adjustable flow control valve
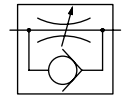	Flow control valve with unidirectional adjustement
	Connected quick-lock couplings without valve
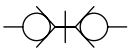	Connected quick-lock couplings with valve
	Uncoupled (with open end) quick-lock couplings without valve
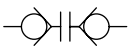	Uncoupled quick-lock couplings with ends blocked by valve
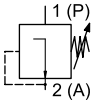	Regulator without relieving
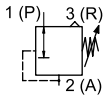	Regulator with relieving

Symbol	Meaning
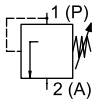	Sequence valve (priority valve)
	Shut off valve
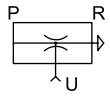	Vacuum generator (for venturi effect)
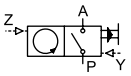	Pneumatic counter
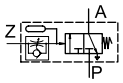	Pneumatic timer delayed energising, with valve 3/2 N.C.
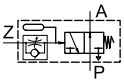	Pneumatic timer delayed energising, with valve 3/2 N.O.
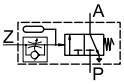	Pneumatic timer delayed de-energising, with valve 3/2 N.C.
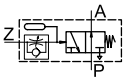	Pneumatic timer delayed de-energising, with valve 3/2 N.O.
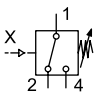	Pressure switch (adjustable)
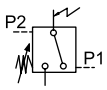	Pneumatic-electrical converter
	Reflex sensor
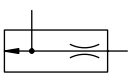	Back pressure end stop

Symbol	Meaning
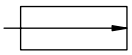	Air barrier sender (emitter)
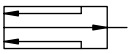	Air barrier receiver
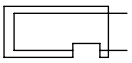	Gap sensor
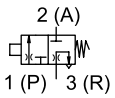	Magnetically operated pneumatic reed switch

The Directive

The 2014/34/EU Directive was adopted by the European Union to regulate the market for products suitable for use in potentially explosive atmospheres, harmonizing their technical characteristics and application standards.

The 2014/34/EU Directive came into force on the 30th of March 2014 and repeals Directive 94/9/EC with effect from 20th of April 2016; it imposes ATEX certification on all products marketed in the European Union, no matter of manufacture place and regulations in force there, if installed in potentially explosive environments.

Criteria for classifying equipment groups into categories

Group **I** includes equipment intended for underground work in mines and their surface installations (category **M1** and **M2**).

Group **II** includes equipment intended for use in other locations liable to be endangered by explosive atmospheres (categories **1**, **2**, **3**).

Products classified in the two groups may have different modes of explosion protection depending on the area in which the equipment is to be used.

For further information on Group II and its classification, please see the table on page III.2

Equipment Protection Level (EPL)

The EN 60079-14 standard introduced a method for risk assessment that takes into account equipment protection levels, called EPL, which indicates the ignition risk inherent within the equipment, regardless the protection mode adopted.
The Atex Category letters "**G**" and "**D**" define whether the equipment can be used in areas containing hazardous gas (**G**) or dust (**D**). In the EPL classification, categories 1, 2 and 3 were replaced by the letters **a**, **b** and **c**.

The meaning of the markings is as follows:

- For Gases:
Ga identifies equipment for use in explosive atmospheres due to the presence of gas, with a "very high" level of protection that is not a source of ignition during normal operation or when subject to expected failure or when subject to rare failure;
Gb identifies equipment for use in explosive gas atmospheres, with a "high" level of protection, which is not a source of ignition during normal operation or when subject to anticipated malfunction, although not on a regular basis;
Gc identifies equipment for use in explosive gas atmospheres, with an "increased" level of protection, which is not a source of ignition during normal operation and which has some additional protective measures to ensure that it remains an inactive ignition source when subject to regularly expected events (e.g. lamp failure).

- For Dusts:
Da identifies equipment for explosive atmospheres due to the presence of combustible dusts, with a "very high" level of protection and which is not a source of ignition in normal operation or when subject to rare failures;
Db identifies equipment for explosive atmospheres due to the presence of combustible dusts, with a "high" level of protection and which is not a source of ignition in normal operation or when subject to expected, but not frequent, failures;
Dc identifies equipment for explosive atmospheres due to the presence of dust, with an "increased" level of protection, which is not a source of ignition in normal operation and which may have additional protections to ensure that it remains inactive as an ignition source in the event of regular and expected failures.

Gas and Dust groups

The ATEX regulation proposes a classification of explosion-hazardous gases and dusts against which the user can protect himself by using a product with an appropriate protection system.

For Group **II** materials, the hazardousness of gases and dust covered by the product increases from subdivision **IIA-IIIA**, the least hazardous, to subdivision **IIC-IIIC**, the most hazardous.

To determine the gases and dust potentially present and their subdivisions, please refer to the subdivision table for Group II on page III.2

Temperature classes for gases and dusts

The housing of the appliance must not have any flash points on its outer surface which could cause spontaneous combustion.

Different substances can ignite at different temperatures. The lower the flash point temperature, the more dangerous the substance. Consequently, any equipment used in an explosive atmosphere is classified according to the maximum surface temperature it generates.

The maximum surface temperature of the material must always be well below the auto-ignition temperature of the dusts and gases present.

For more information on the corresponding temperature classes and maximum surface temperatures, see the relevant table on page III.2

Classification and labeling of areas at risk of explosion

Flammable subjects	Hazardous environments (Presence of Potentially Explosive Atomospheres)	Explosion risk areas (Partition)	Device classification			Equipment Protection Level (EPL)		
			Group	Category				
Gases Steams Mists	Continuously, for long periods or frequently	Zone 0	II	1G		Ga		
	Occasionally	Zone 1	II		2G		Gb	
	Rarely or for very short periods	Zone 2	II			3G		Gc
Dusts	Continuously, for long periods or frequently	Zone 20	II	1D		Da		
	Occasionally	Zone 21	II		2D		Db	
	Rarely or for very short periods	Zone 22	II			3D		Dc

Subdivision and differentiation of gases, mists and steams

Explosion group	Most common gases in reference to explosion group and temperature classes					
IIA	Ammonia Methane Ethane Propane	Ethanol Cyclohex. n-Butane	Gasoline Diesel n-Hexane	Acetaldeh.		
IIB	Smog Acrylic Nitrile	Ethylene Ethylene oxide	Ethylene glycol Hydrogen sulphide	Ethyl ether		
IIC	Coal hydrogen	Acetylene				Disulfide

T1 < 450°C
T2 < 300°C
T3 < 200°C
T4 < 135°C
T5 < 100°C
T6 < 85°C

Marking

Community mark of conformity to safety requirements

Specific marking for protection from explosions

CE Ex

II 2G Ex ia IIC T6 Gb

II 2D Ex tb IIIC T80°C Db X IP 6 5

Device	Protection principle	Protection type	Marking		Use zone	Symbol	Standard
Electric	Containment	Explosion proof	Ex d	-	-		EN60079-1
				b	1		
				c	2		
	Prevention	Increased Safety	Ex e	-	-		EN60079-7
				b	1		
				c	2		
	Prevention	Intrinsic Safety	Ex i	a	0, 20		EN60079-11
				b	1, 21		
				c	2, 22		
	Segregation	Pressurization	Ex p	x	-		EN60079-2
				y	1, 21		
				z	2, 22		
	Segregation	Encapsulation	Ex m	a	0, 20		EN60079-18
				b	1, 21		
				c	2, 22		
	Segregation	Oil immersion	Ex o	-	-		EN60079-6
				b	1		
				c	2		
	Segregation	Sand filling	Ex q	-	-		EN60079-5
					1		
				b	2		
	Prevention Containment Segregation	Ignition proof	Ex n	A	2		EN60079-15
				C			
				R			
	Segregation	Dustproof	Ex t	a	20		EN60079-31
				b	21		
				c	22		
Mechanical	Prevention Containment	Control of ignition sources	Ex h	c	0, 20		EN80079-37
					1, 21		
					2, 22		
	Prevention Containment	Constructive safety		b	0, 20		
					1, 21		
					2, 22		
	Prevention Containment Segregation	Liquid immersion		k	0, 20		
					1, 21		
					2, 22		

Principle and type of protection

Group	Classification
IIIA	Volatile combustible substances (fibers)
IIIB	Non-conductive powders
IIIC	Conductive powders

Dust classification

Information	Suffix
No limitations	-
Some conditions must be met	X
To be used only in a complete system	U

Additional information

Solid and dust protection		Liquids protections	
0	not protected	0	not protected
1	solids > 50 mm	1	vertical rain
2	solids > 12,5 mm	2	cross rain (up to 15°)
3	solids > 2,5 mm	3	cross rain (fino a 60°)
4	solids > 1 mm	4	splashing water from every direction
5	dusts (limited access)	5	water sprays from all direction
6	dusts (full protection)	6	high pressure water sprays from all directions
7	-	7	temporary immersion (max.1 m for 30')
8	-	8	continuous immersion (>1 m for 60')

IP class protection

API & ATEX

For more than 50 series of components in the catalogue, API offer the ATEX version on request, while some specific types of products are supplied as standard in accordance with Directive 2014/34/EU, in different classifications.

Below is an overview of the components concerned, with indications of the classifications that can be adopted.

For further information, please refer to the data sheets of the single products.

Cylinders

Cylinders ISO 6432	from page 1.2.1
Cylinders ISO 15552	from page 1.5.1
Round cylinders	from page 1.10.1
CNOMO cylinders	from page 1.14.1
Compact cylinders ISO 21287	from page 1.16.1
Compact cylinders UNITOP	from page 1.17.1
Short stroke cylinders	from page 1.20.1
Compact cylinders CL	from page 1.21.1
Compact guided cylinders	from page 1.23.1
Slide units for ISO cylinders	from page 1.70.1

On request can be supplied according to 2104/34/EU ATEX Directive in Ex h classification, with the following marking:

II 2G Ex h IIC T5 Gb
II 2D Ex h IIIC T100°C Db



Stainless Steel cylinders

Cylinders ISO 6432	from page 5.2.1
Cylinders ISO 15552	from page 5.5.1
Round cylinders	from page 5.11.1
Compact cylinders ISO 21287	from page 5.20.1

On request can be supplied according to 2104/34/EU ATEX Directive in Ex h classification, with the following marking:

II 2G Ex h IIC T5 Gb
II 2D Ex h IIIC T100°C Db



Magnetic reed switches for cylinders

Magnetic reed switch type MK500A	page 5.113.1
Magnetic reed switch type MK502A	page 5.113.1

Supplied as standard according to 2104/34/EU ATEX Directive with marking:

II 3D Ex tc IIIC T125°C Dc X



Supplied as standard according to 2104/34/EU ATEX Directive with marking:

II 1G Ex ia IIC T4 Ga
II 1D Ex ia IIIC T135°C Da



Valves

Complete valves series XA Matching aluminium valve body: A1E, A1K A1NE ISO..E, ISO..K ISO..EL, ISO..KL	from page 2.320.1	Solenoid valves supplied complete and already assembled, according to 2104/34/EU ATEX Directive, in classification Ex ia, with marking: II 2G Ex ia IIC T6 Gb II 2D Ex tb IIIC T80°C Db X IP65	
Matching stainless steel valve body: AX1E, AX1K AX1NE	from page 5.150.1		
Complete valves series XA1 Matching aluminium valve body: A1E, A1K A1NE ISO..E, ISO..K ISO..EL, ISO..KL	from page 2.320.1	Solenoid valves supplied complete and already assembled, according to 2104/34/EU ATEX Directive, in classification Ex ia, with marking: II 2G Ex ia IIC T4 Gb II 2D Ex tb IIIC T80°C Db X IP65	
Matching stainless steel valve body: AX1E, AX1K AX1NE	from page 5.150.1		
Complete valves series XC Matching aluminium valve body: A1E A1NE	from page 2.320.1	Solenoid valves supplied complete and already assembled, according to 2104/34/EU ATEX Directive, in classification Ex db, with marking: II 2G Ex db IIC T6 Gb	
Matching stainless steel valve body: AX1E AX1NE	from page 5.150.1		
Valve to be configured combining valve body with coil and connector. Matching aluminium valve body: A1EM A1E..MD A1E, A1K A1NE ISO..E, ISO..K ISO..EL, ISO..KL AEF	from page 2.320.1	Valve body to be combined with coil and connector to obtain solenoid valve according to 2104/34/EU ATEX Directive, in classification Ex ec, with marking: II 3G Ex ec IIC T5 Gc II 3D Ex tc IIIC T95°C Dc IP65	
Matching stainless steel valve body: AX1E, AX1K AX1NE	from page 5.150.1		
Valve to be configured combining valve body with coil and connector. Matching aluminium valve body: A1E, A1K A1NE ISO..E, ISO..K ISO..EL, ISO..KL AEF	from page 2.320.1	Valve body to be combined with coil with integrated connector to obtain solenoid valve according to 2104/34/EU ATEX Directive, in classification Ex dm, with marking: II 2G Ex db mb IIC T5 Gb II 2D Ex tb IIIC T95°C Db IP66	
Matching stainless steel valve body: AX1E, AX1K AX1NE	from page 5.150.1		
Valve to be configured combining valve body with coil and connector. Matching aluminium valve body: A1E, A1K A1NE ISO..E, ISO..K ISO..EL, ISO..KL AEF	from page 2.320.1	Valve body to be combined with coil with integrated cabled connector to obtain solenoid valve according to 2104/34/EU ATEX Directive, in classification Ex dm, with marking: II 2G Ex mb IIC T5 Gb II 2D Ex tb IIIC T95°C Db IP66	
Matching stainless steel valve body: AX1E, AX1K AX1NE	from page 5.150.1		

Actuators and accessories

Single acting rotary actuators	from page 2.401.1	Supplied as standard according to 2104/34/EU ATEX Directive, in classification Ex h, with marking: II 2G Ex h IIC T6 Gb II 2D Ex h IIIC T85°C Db	
Double acting rotary actuators	from page 2.403.1		
Brass ball valve with single acting rotary actuators	from page 2.410.1		
Brass ball valve with double acting rotary actuators	from page 2.411.1		
Stainless Steel ball valve with single acting rotary actuators	from page 2.414.1		
Stainless Steel ball valve with double acting rotary actuators	from page 2.415.1		
Limit switch box Ex ia	from page 2.426.1	Supplied as standard according to 2104/34/EU ATEX Directive, in classification Ex ia, with possibility to choose between the following markings: II 1G Ex ia IIC T6/T5 Ga II 1D Ex ia IIIC T135°C Da II 1G Ex ia IIB T6/T5 Ga II 2G Ex ia IIC T6/T5 Gb II 1D Ex ia IIIC T135°C Da	
Limit switch box Ex ec	from page 2.426.1	Supplied as standard according to 2104/34/EU ATEX Directive, in classification Ex ec, with marking: II 3G Ex ec IIC T6 Gc II 3D Ex tc IIIC T85°C Dc	

Stainless Steel modular units for air treatment

F.R.L. modular units	from page 5.202.1	Supplied as standard according to 2104/34/EU ATEX Directive, with marking: II 2G Ex h IIC T6 Gb II 2D Ex h IIIC T85° Db	

Air-reservoirs

Steel Air-reservoirs	from page 4.70.1	On request can be supplied according to 2104/34/EU ATEX Directive in Ex h classification, with the following marking: II 2G Ex h IIC TX Gb II 2D Ex h IIIC TX°C Db	
Stainless Steel Air-reservoirs	from page 5.202.1		

Find out about API Key Products

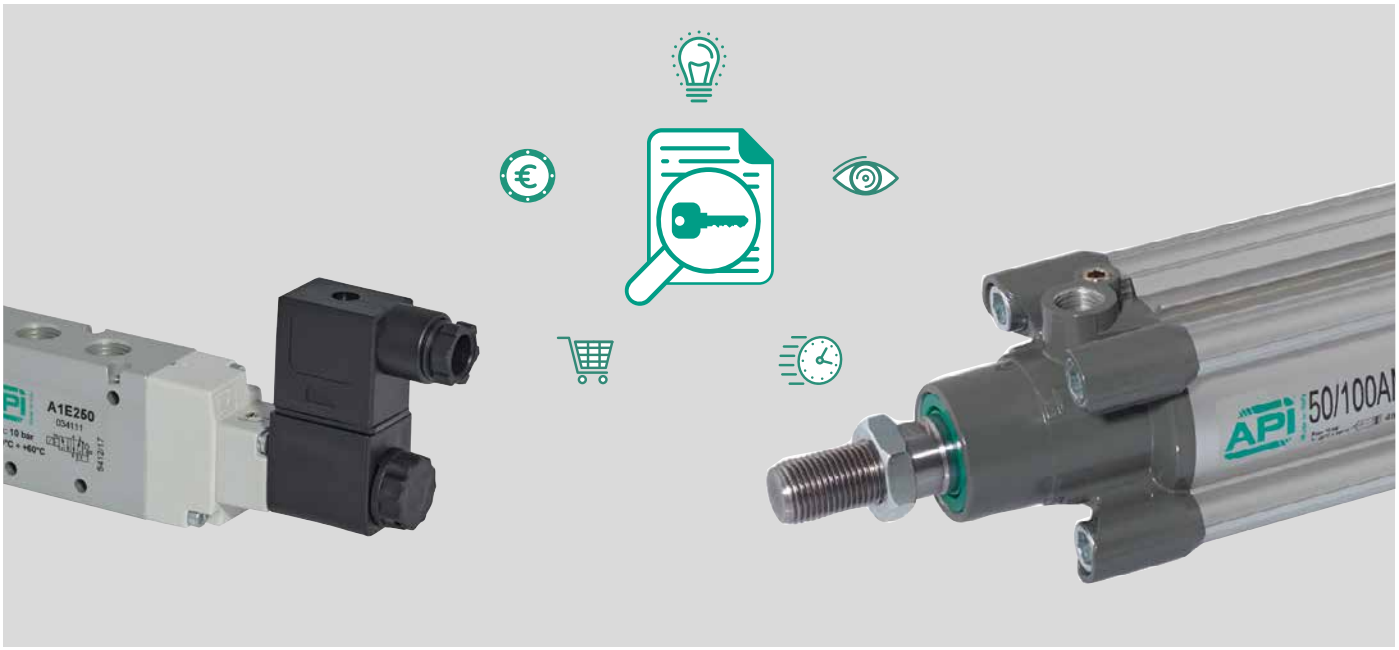

What are the API Key Products

Within API wide range - which include Cylinders, Valves, Air Treatment, Accessories and Stainless Steel Components - API made a selection of products for its Customers, that represent the solution for most industrial applications and are characterised by excellent value for money, wide availability and fast delivery.

Therefore this selection was named "Key Products", and the components that are part of it are immediately identifiable in the API catalogue by the symbol next to the code or article suffix.

Solution for most applications

A careful selection of products suitable for installation in the most popular applications of industrial automation.

Excellent value for money

Competitiveness is now more than ever a very important factor, but is also crucial to install a quality components on applications to guarantee performance, reliability and long lasting lifetime.

Easy and intuitive choice

Is sufficient to recognise the symbol next to the code or article suffix of the component, to know that it is part of the API Key Product selection.

Wide availability

The products offered in the API Key Products selection are in stock (or the company stock the necessary components for their assembly) even in considerable quantities.

Fast delivery

In an increasingly dynamic market, delivery schedules, condition customers' choices, so the products in the API selection are all featured by fast delivery possibility.

Note

CYLINDERS

CHAPTER 1



General informations

Cylinders technical features	Page 1.1.1

Cylinders conforming to standards

Series		Type	Page
ISO 6432		MS, MSM, MD, MDM, MDMA	1.2.1
ISO 15552		AMA, AMT, BMA, BMT	1.5.1
CNOMO		CX, CM	1.14.1
Compact ISO 21287		CIS, CI	1.16.1
Compact UNITOP		CS, CD	1.17.1

Cylinders not conforming to standards

Series		Type	Page
Round		MSM, MDM, MDMA, RS, RD, RMD, RDMA	1.10.1
Compact		DU, DUM	1.18.1
Short stroke		BS, BSM, BD, BDM	1.20.1
Compact CL		CLS, CLD, CLB	1.21.1
Compact guided		GEDB, GEDS, GPB, GPS	1.23.1
Twin-rod		GSB, GSS	1.24.1
Rodless		S1, S2, S3, S4, S5, S6	1.26.1
Cartridge		MCF, MCN	1.55.1

Rotary cylinders and actuators

Series		Type	Page
Rotary cylinders		CRTH, CRTHD, CRTF	1.40.1
Rotary vane cylinders		ARTM, ARTMF	1.50.1
Rotary actuators		ARC, ARP	1.52.1

Hand grips

Series		Type	Page
Angular hand grips		PAB, PAC	1.60.1
Parallel hand grips		PPB, PPC, PPD, PPE	1.60.1

Accessories for cylinders

Description			Page
Slide units		For cylinders ISO 6432 and ISO 15552	1.70.1
Piston rod brake		For cylinders ISO 6432 and ISO 15552	1.75.1
Clevis		Conforming to ISO, DIN and CNOMO standards	1.85.1
Bearings		Bearing heads	1.85.1
Couplings		Self-aligning articulated, axial and angular couplings	1.85.1
Other rod accessories		Nipples e rod nuts	1.85.1
Shock absorbers		DR, DRF	1.105.1
Magnetic reed switches and cables		For T and C grooves, high temperatures and conforming to Atex	1.110.1
Brackets for magnetic reed switches		AFM, AFR, AS	1.110.1

Mountings for cylinders

Page 1.94.1

Description			Page
Mountings for cylinders ISO 6432		In steel	1.95.1
Mountings for round cylinders		In steel	1.96.1
Mountings for cylinders ISO 15552		In aluminium	1.97.1
		In steel	1.98.1
Mountings for cylinders CNOMO		In aluminium	1.99.1
		In steel	1.99.50
Mountings for compact cylinders ISO 21287		In aluminium	1.100.1
		In steel	1.100.50
Mountings for compact cylinders UNITOP		In aluminium	1.100.100
		In steel	1.100.150
Mountings for short stroke cylinders		In aluminium	1.100.200
Mountings for rodless cylinders		In aluminium	1.100.250
Mountings for hand grips		In aluminium	1.100.350
Brackets for slide units		In aluminium	1.100.400
Screws, nuts and growers		In steel	1.101.1

Notes

Definition and main features

The pneumatic cylinder is an engine that uses pneumatic energy, transforming it into mechanical work by means of rectilinear movement.
It is composed of a barrel, closed at the ends by two heads, within which a piston moves, separating two chambers. The piston is equipped with a rod that, when exiting through one or both of the heads, permits the exploitation of the force developed by the cylinder.
The characteristic parameters of a cylinder are:

Bore	=	internal diameter of the [mm]
Stroke	=	working movement to be performed [mm]
Diameter of the piston rod	=	closely correlated to the bore [mm]
Number of actings	=	number of strokes per cycle during which work is performed. These may be either one (single acting); or two (double acting).

Operating pressure range [bar]
Operating temperature range [°C]
Translation velocity [m/s]
Number of adjustable end cushionings
Kinetic energy absorbed by the cushionings [Nm]
Air consumption [nl/min]
Theoretical force [N]

Bore Ø

A finite number of bores are available, all of which are standardized. The range goes from bores measuring just a few millimetres to those of 320 mm

Pressure range P

This value is not very variable, due to technical-economical reasons. It covers the range 5 ÷ 7 bar. A system operating at 6 bar is considered optimized.

Piston rod diameter d

This is standardized for all the available bores.

Stroke c

The most frequently requested strokes are available in our warehouse. Any technically compatible stroke can be supplied in a short time.

It is advisable to choose easily available strokes that are greater than the operating strokes, halting the stoke at the desired value by means of external mechanical stops, in order to obtain mechanical precision and greater durability of the cylinder.

Operating temperature range

Ambient temperature must not be such as to make the cylinder assume values outside the temperature range for which it was constructed. It is possible to construct cylinders that are resistant to very low or very high temperatures, using special materials.
The catalogues always show the operating temperature range.
The cylinder can also reach high temperatures due to particular conditions of use: in general, when the friction between the tube and the mobile apparatus increases greatly (e.g. due to high speeds with insufficient lubrication, the exhaustion of assembly lubrication or excessive compression of the air). The seals of the cylinder are the most short-lived component and those that are most sensitive to temperature.

Translation velocity v

It is advisable to adjust the translation velocity by means of the air discharge.
The movement of the piston is fairly regular even with minimum velocities of 40 mm/s.
The maximum velocity acceptable without additional lubrication to assembly lubrication, is equivalent to 1000 mm/s. Velocities of 2 ÷ 3 m/s can be reached with appropriate lubrication.
For high velocities, as for high masses, the kinetic energy to be reabsorbed is excessive for the air cushionings. It is necessary to use external hydraulic cushionings of an appropriate size.

Theoretical force Ft

The theoretical force generated by a cylinder can be calculated by multiplying the actual area of the piston subjected to pressure by the operating pressure. For cylinders during pushing, the effective area of the piston corresponds to the bore:

$Ft = \pi \Phi^2 p / 40$ [N]

Φ = bore [mm]
P = operating pressure [bar]

N.B.: the formula considers passages from bars to N/m^2 and from mm^2 to m^2.

For cylinders in traction, it is necessary to subtract the area of the rod from that of the piston:

$Ft = \pi (\Phi^2 - d^2) p / 40$ [N]

Motion force F

The available motion force to the piston rod is:
F = Ft - R
Where R represents a force of reaction that comprises numerous factors: friction, form and type of seals, operating pressure, counter-pressure at discharge. The value of R is not easy to quantify as its component factors are not only numerous, but also variable. A cautious estimate for usual applications could be 30% Ft.
As shown by the graph illustrated below, which indicates the progress of the pressure values of delivery and discharge during the uniform movement of a cylinder, the delivery value Pm and the discharge value Ps remain constant during the stroke of the cylinder, if we exclude the brief transitory periods: of acceleration following the switching of the distributing valve and cushion at the end of the stroke.
The cylinder is thus prevalently subject to a motion force F proportional to Pm and the pushing surface, and to a counter-pressure force Fs proportional to the pressure Ps and the section upon which it acts, both of which are constant. The load reaction Fc must be added to these two forces.
In other words, the cylinder, in dynamic equilibrium, will - like all engines in this state - find itself under the action of contrasting forces that balance each other. It will move at a constant speed under the action of a constant force.
Ft - Fs - Fa = Fc Where Fs is the counter-pressure force and Fa is a force that bears in mind the friction and reduction of the operating power, to which Ft is linked, which does not reach the static network pressure, as can be seen in the graph.
During the transitory acceleration period, the force Fs is very low, as the air is being discharged. As the speed of the piston increases, the air being discharged is compressed and the force Fs increases until the state of equilibrium is reached.
For example, we wish to find the cylinder capable of overcoming the load value **Fc = 1200 [N]**
The theoretical force Ft must be at least 30% greater. Let's assume that: **Ft = 1600 [N]**
This gives the following result:

$\Phi = \sqrt{40Ft/\pi p}$ $\Phi = \sqrt{40x1600/3,14x6}$ $\cong 58$ [mm]

The closest standardized bores turn out to be: 50 mm and 63 mm It is advisable to choose the bore Φ = 63 mm, also because it enables a reserve of power to be obtained.
The uniform movement of the cylinder can be obtained by regulating the air at the discharge.
In order to obtain high values, on the other hand, it is necessary to make an appropriate increase in the discharge space in order to obtain accelerated movements, as the equilibrating force of counter-pressure is no longer present.

Peak load

In the case of long strokes, the load that can be applied to the piston rod is reduced due to the decrease in resistance at peak load.
The lifespan of a cylinder depends largely on its mechanical application. Installation must be performed in such a way as to avoid, or at least minimize, bending moments and radial loads on the piston rod (the most onerous kind of anchorage is the hinge type).
If only axial loads need be applied, the piston rod will be subjected to the peak load during pushing.
As the acceptable peak load is proportional to the diameter of the piston rod d (through the elastic modulus and the inertia moment) and inversely proportional to twice the stroke (length of free inflexion), in the case in which it does not allow the application of the required force, it is necessary to increase the diameter of the piston rod, passing to a suitably larger bore.
The choice of the standardized bore that best satisfies the requirements of the application in question is not just linked to the satisfaction of the force to be provided, but also to that of other conditions. These include the need to always have a power reserve (by choosing a larger size) and that of not causing excessive stress to the cushionings.

Air consumption Nl/min

Air consumption air is a working value; it has a significant influence on costs. It is possible to calculate the average air consumption using the following formula:

$Q = \pi \Phi^2 /4x\ 60\ c/t\ x\ (p+p0) / p0\ x\ 10^{-3}\ x\ 10^{-3}$ [nl/min]

Where:
Q = air consumption [nl/min]
Φ = bore [mm]
c = stroke [mm]
t = time taken to perform the stroke [s]
p = atmospheric operating pressure [bar]
p0 = atmospheric pressure: 1 bar

For example, we want to calculate the consumption of the following cylinder:
d = 50 mm; c = 300 mm; t = 0,45 s; p = 6 bar

$Q = 3,14\ x\ 25\ x\ 10^2/4\ x\ (60\ x\ 3\ w\ 10^2/0,45)\ x\ 7\ \ 10^{-3}\ x\ 10^{-3} = 550$ [nl/min]

Piston force F

The piston force (F) can be determined on the basis of the following formulae relating to the area of the piston rod (A), operating pressure (p) and friction (R).

Piston force $F = a \cdot p - R$

(final pressure) $F = p \cdot 10 \frac{d^2 \cdot \pi \cdot 10}{4} - R$

p = bar
d = bore (mm)
R = friction = 10% (N)
A = area of piston rod
F = actual force of piston (N)

Theoretical cylinders force

Pressure range / Piston force (N)

Bore Ø mm	Operating pressure bar									
	1	2	3	4	5	6	7	8	9	10
6	2,5	5,1	7,6	10,2	12,7	15,3	17,8	20,4	22,9	25,4
8	4,5	9,0	13,6	18,1	22,6	27,1	31,7	36,2	40,7	45,2
10	7,1	14,1	21,2	28,3	35,3	42,4	49,5	56,5	63,6	70,7
12	10,2	20,4	30,5	40,7	50,9	61,0	71,3	81,4	91,6	101
16	18,1	36,2	54,3	72,4	90,5	109	127	145	163	181
20	28,3	56,5	84,8	113	141	170	198	226	254	283
25	44,2	88,4	133	177	221	265	309	353	398	442
32	72,3	145	217	290	362	434	507	579	651	724
40	113	226	339	452	565	679	792	905	1020	1130
50	177	353	530	707	884	1060	1240	1410	1590	1770
63	281	561	842	1120	1400	1680	1960	2240	2520	2810
80	452	905	1360	1810	2260	2710	3170	3620	4070	4520
100	707	1410	2120	2830	3530	4240	4950	5650	6360	7070
125	1100	2210	3310	4420	5520	6630	7730	8840	9940	11000
160	1810	3620	5430	7240	9050	10900	12700	14500	16300	18100
200	2830	5650	8480	11300	14100	17000	19800	22600	25400	28300
250	4420	8840	13300	17700	22100	26500	30900	35300	39800	44200
320	7240	14500	21700	29000	36200	43400	50700	57900	65100	72400

Notes

CYLINDERS
ISO 6432



Find out our
key products

- **Solution for most applications**
- **Easy and intuitive choice**
- **Excellent value for money**
- **Wide availability**
- **Fast delivery**

Features and certifications

Series of cylinders conforming to ISO 6432 standards, available in bores from Ø 8 to 25, single or double acting, magnetic or non-magnetic. The heads joined to the barrel through rolling ensure perfect tightening. Supplied as standard in compliance with Reach and RoHS directives, and SIL certificated.
On request, they can be also supplied according to the 2014/34/EU ATEX Directive.

ISO 6432 · SIL · RoHS · REACH compliant · Ex

Type MS Ø 8 ÷ 25

from page 1.2.20



Cylinders conforming to ISO 6432 standards, available in bores from Ø 8 to 25, single acting, non magnetic, the heads joined to the barrel through rolling ensure perfect tightening. Equipped with rubber bumpers to cushion the impact of the piston. Complete with head nut and rod nut.

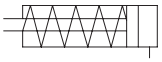

Type MSM Ø 8 ÷ 25

from page 1.2.20



Cylinders conforming to ISO 6432 standards, available in bores from Ø 8 to 25, single acting, magnetic, the heads joined to the barrel through rolling ensure perfect tightening. Equipped with rubber bumpers to cushion the impact of the piston. Possibility of applying one or more magnetic reed switches. Complete with head nut and rod nut.

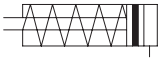

Type MD Ø 8 ÷ 25

from page 1.2.50



Cylinders conforming to ISO 6432 standards, available in bores from Ø 8 to 25, double acting, non magnetic, the heads joined to the barrel through rolling ensure perfect tightening. Equipped with rubber bumpers to cushion the impact of the piston. Complete with head nut and rod nut.

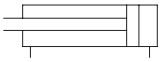

Type MDM Ø 8 ÷ 25

from page 1.2.50



Cylinders conforming to ISO 6432 standards, available in bores from Ø 8 to 25, double acting, magnetic, the heads joined to the barrel through rolling ensure perfect tightening. Equipped with rubber bumpers to cushion the impact of the piston. Possibility of applying one or more magnetic reed switches. Complete with head nut and rod nut.

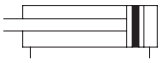

Type MDMA Ø 16 ÷ 25

from page 1.2.70



Cylinders conforming to ISO 6432 standards, available in bores from Ø 16 to 25, double acting, magnetic, the heads joined to the barrel through rolling ensure perfect tightening. Equipped with adjustable air cushioning on both ends. Possibility of applying one or more magnetic reed switches. Complete with head nut and rod nut.

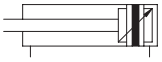

Types MSM, MDM and MDMA Ø 32 ÷ 63

from page 1.10.1



Round cylinders not conforming to standards, available in bores from Ø 32 to 63, magnetic, single acting (type MSM), double acting (type MDM) or double acting with cushions (type MDMA). The heads are joined to the barrel through rolling ensure perfect tightening. Possibility of applying one or more magnetic reed switches. Complete with head nut and rod nut.

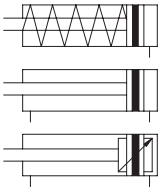

Options

Description	Symbol	Suffix
Through rod (available from Ø 16)	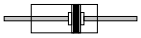	**P**
Rear spring (available only for MS and MSM type, from Ø 16)		**T**
Extended rod in hardened and chrome plated steel suitable for static piston rod brake (available from Ø 20)		**B**
FKM seals -20°C ÷ +150°C	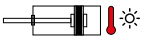	**V**
Anti-rotating hexagonal rod (available from Ø 16)	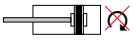	**Q**
ATEX versions on request		**/ATEX**
Special versions on request		**/S**

The options, when this is possible, can be combined with each other. For options matching see page 1.2.4; For code key see page 1.2.5.

Options matching

Series	Bore	Model	Standard options matching					
			P (Ø16÷25)	**T** (Ø16÷25)	**V**	**B** (Ø20÷25)	**Q** (Ø16÷25)	**/ATEX**
MS-MSM	Ø 8 ÷ 25	Standard	●	●	●	●	●	●
	Ø 16 ÷ 25	Through rod (P)		-	●	●	●	●
		Rear spring (T)	-		●	●	●	●
	Ø 20 ÷ 25	Piston rod brake (B)	●	●	●		-	-
	Ø 16 ÷ 25	Anti-rotating rod (Q)	●	●	●	-		●
MD-MDM	Ø 8 ÷ 25	Standard	●	-	●	●	●	●
	Ø 16 ÷ 25	Through rod (P)		-	●	●	●	●
	Ø 20 ÷ 25	Piston rod brake (B)	●	-	●		-	-
	Ø 16 ÷ 25	Anti-rotating rod (Q)	●	-	●	-		●
MDMA	Ø 16 ÷ 25	Standard	●	-	●	●	●	●
		Through rod (P)	-	-	●	●	●	●
	Ø 20 ÷ 25	Piston rod brake (B)	●	-	●	-	-	-
	Ø 16 ÷ 25	Anti-rotating rod (Q)	●	-	●	-		●

Key
● allowed matching; - not allowed matching

Standard materials

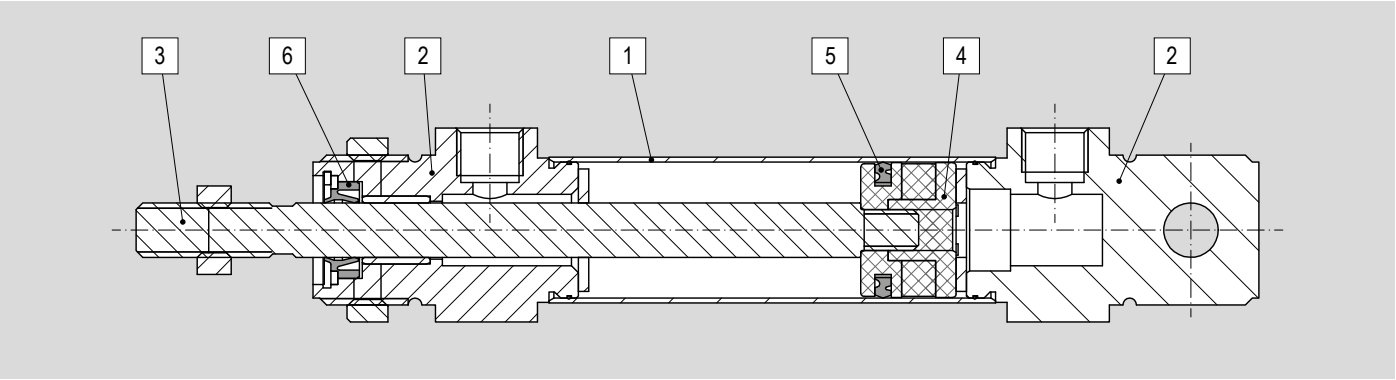

Position	Description	Materials
1	Tube	Stainless Steel AISI 316
2	Heads	Anodised aluminium
3	Rod	Stainless Steel AISI 304
4	Piston	Anodised aluminium
5	Piston seal	NBR
6	Rod seal	Polyurethane (PU)

Code key

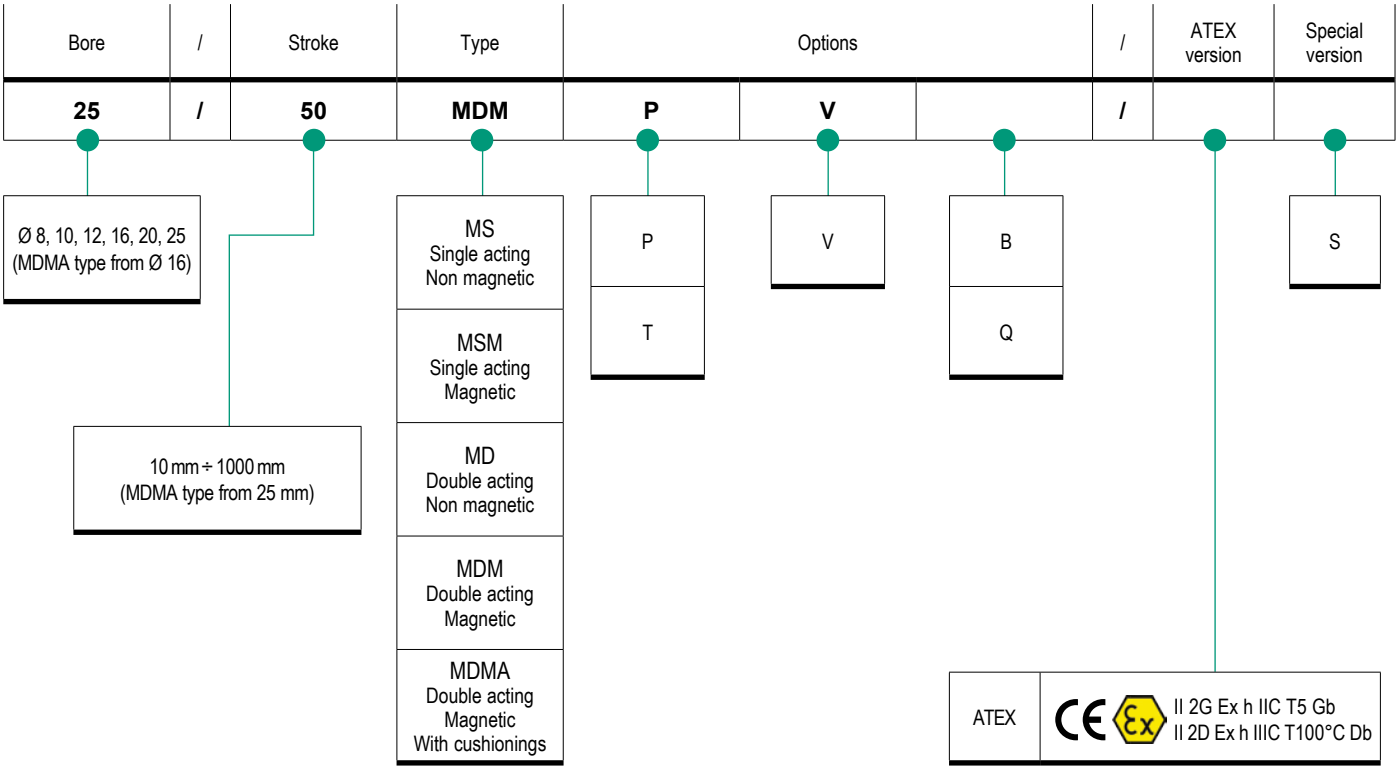

How to order

Bore		Stroke	Type	Options
25	/	50	MDM	P V

Notes

Options in the same grid are alternative to each others.

For further information on options and their matching, see page 1.2.3 and page 1.2.4

For further information on the ATEX 2014/34/EU Directive, on classifications and protections, see from page III.1

Accessories

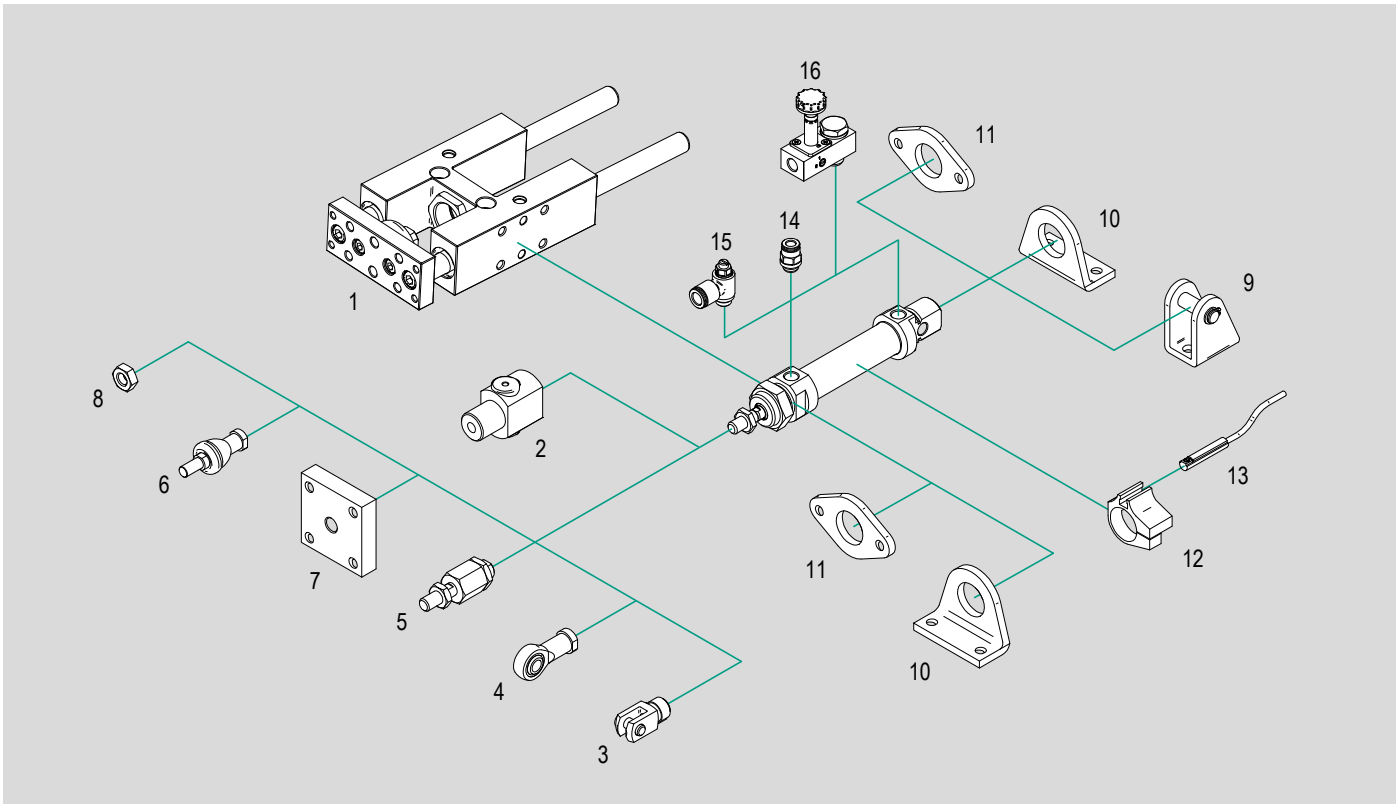

N.	Cylinder bore	Item	Description	Compliance	Matching					Code page	Data sheet page
					MS	MSM	MD	MDM	MDMA		
1	Ø 12 ÷ 25	UGLB	Slide unit U-shaped	-	●	●	●	●	●	1.2.90	1.70.1
		UGPB UGPS	Slide unit H-shaped		●	●	●	●	●		
2	Ø 20 ÷ 25	ABS	Static piston rod brake		●	●	●	●	●		1.75.1
3	Ø 8 ÷ 25	FF..	ISO female clevis with clip	ISO 8140	●	●	●	●	●		1.85.10
		FFP..	ISO female clevis with pin and seeger		●	●	●	●	●		
		FFN..	ISO female clevis (body only)		●	●	●	●	●		1.85.11
4	Ø 8 ÷ 25	RF..SE	Bearing head (DIN 648K) with female thread	ISO 8139	●	●	●	●	●		1.90.1
5	Ø 8 ÷ 25	GB..	Bearing - Self-aligning articulated coupling	-	●	●	●	●	●		1.90.10
6	Ø 12 ÷ 25	RBI..	Bearing - Axial articulated coupling		●	●	●	●	●	1.2.91	1.90.20
		RBL..	Bearing - Angular articulated coupling		●	●	●	●	●		1.90.30
7	Ø 25	GC..	Self-aligning coupling		●	●	●	●	●		1.90.40
8	Ø 8 ÷ 25	D..	Rod nut	UNI 5589	●	●	●	●	●		1.90.70
9	Ø 8 ÷ 25	CF..	Rear clevis	ISO MP3	●	●	●	●	●		1.95.1
10	Ø 8 ÷ 25	P..	High foot	ISO MS3	●	●	●	●	●		
11	Ø 8 ÷ 25	F..	Flange	ISO MF8	●	●	●	●	●		1.95.2
12	Ø 8 ÷ 25	AFM..	Bracket for T type magnetic reed switches	-	-	●	-	●	●		1.120.1
13	Ø 8 ÷ 25	ASV..	Magnetic reed switch T groove		-	●	-	●	●		1.110.10
		MK..	ATEX magnetic reed switch T groove	2014/34/EU	-	●	-	●	●		1.113.1
14	Ø 8 ÷ 25	R..	Push-in fittings	-	●	●	●	●	●	4.2.1	
15	Ø 8 ÷ 25	V..C	Flow controls, for cylinders		●	●	●	●	●	4.94.1	
16	Ø 20 ÷ 25	A1E1..MD	22mm direct mounting solenoid valves		●	●	-	-	-	1.2.90	2.10.1

Key

● matching accessory; - not matching accessory

Main features

8 ÷ 25 — Bores Ø

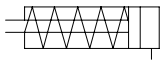

Single acting
Non magnetic

MS — Type

8 ÷ 25 — Bores Ø

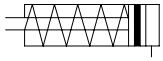

Single acting
Magnetic

MSM — Type



Technical data

Bore Ø mm		8			10			12			16			20			25		
Fluid		Filtered compressed air with or without lubrication. Lubrication, if started, must be continued.																	
Pressure range		1 ÷ 10 bar																	
Temperature range		-20°C ÷ +80°C (standard) -20°C ÷ +150°C (V)																	
Strokes		10 ÷ 50 mm																	
Ports		M5												1/8"					
Rod thread		M4						M6						M8			M10x1,25		
Thrust force at 6 bar (N)		20			35			50			90			148			250		
Traction force (N)	Stroke (mm)	10	25	50	10	25	50	10	25	50	10	25	50	10	25	50	10	25	50
	min.	4,8	4	3,2	4,8	4	3,2	6,3	5,4	3,9	13,1	11,8	9,7	18,1	16,4	13,4	22,9	21,1	17,7
	max.	5,3	5,3	5,3	5,3	5,3	5,3	6,9	6,9	6,9	14	14	14	19,4	19,4	19,4	23,9	23,9	23,9

Standard strokes

Stroke mm	**MS** Bore Ø mm					
	8	10	12	16	20	25
10						
25						
50						

Stroke mm	**MSM** Bore Ø mm					
	8	10	12	16	20	25
10						
25						
50						

Key
Standard stroke

Standard dimensions

Type: **MS - MSM**

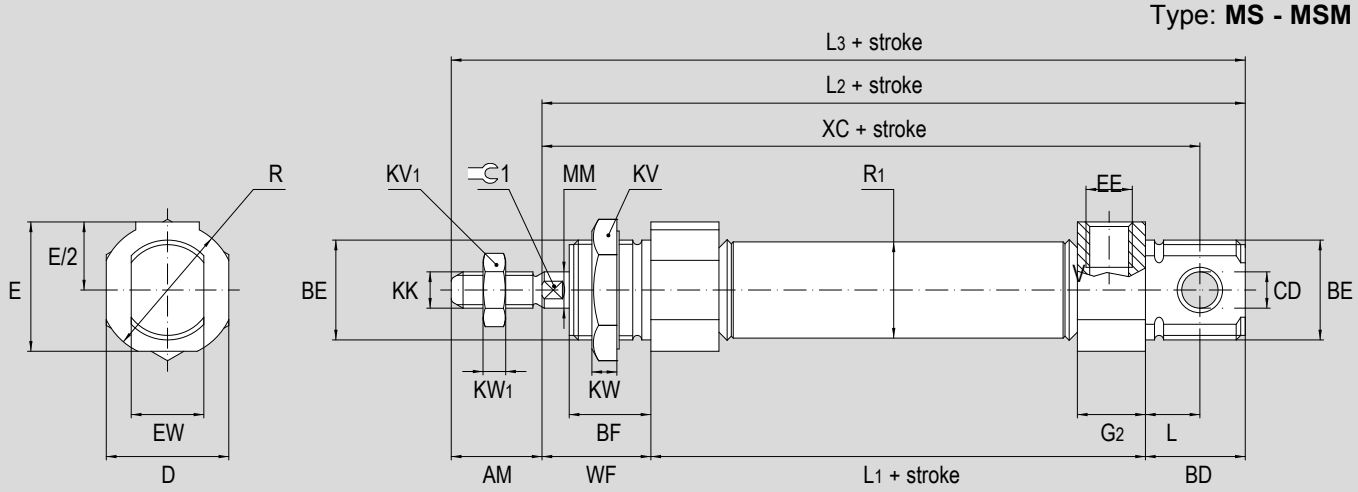

Ø (mm)	KK	MM	BE	R	EW	R_1	E	CD	AM	XC	L_2	L
8	M4x0,7	4	M12x1,25	16	8	9,27	15	4	12	64	74	4
10	M4x0,7	4	M12x1,25	16	8	11,27	15	4	12	64	74	4
12	M6x1	6	M16x1,5	21	12	13,27	18	6	16	75	89	2
16	M6x1	6	M16x1,5	21	12	17,27	19	6	16	82	96	2
20	M8x1,25	8	M22x1.5	30	16	21,27	28,5	8	20	95	105	12
25	M10x1,25	10	M22x1,5	30	16	26,5	28,5	8	22	104	114	12

Ø (mm)	L_1	WF	BF	BD	EE	L_3	D	KW	KW_1	1	KV_1	KV	E/2	G_2
8	46	16	12	12	M5	86	16	7	3	-	7	19	7,5	9
10	46	16	12	12	M5	86	16	7	3	-	7	19	7,5	9
12	51	22	16	16	M5	105	19	8	3,5	5	10	24	10	10
16	58	22	16	16	M5	112	19	8	3,5	5	12	24	10	10
20	59	24	18	22	G1/8"	125	27	6	5	7	14	27	15	15
25	64	28	20	22	G1/8"	136	27	6	6	9	17	27	15	16

Dimensions with options

Type: **...P**

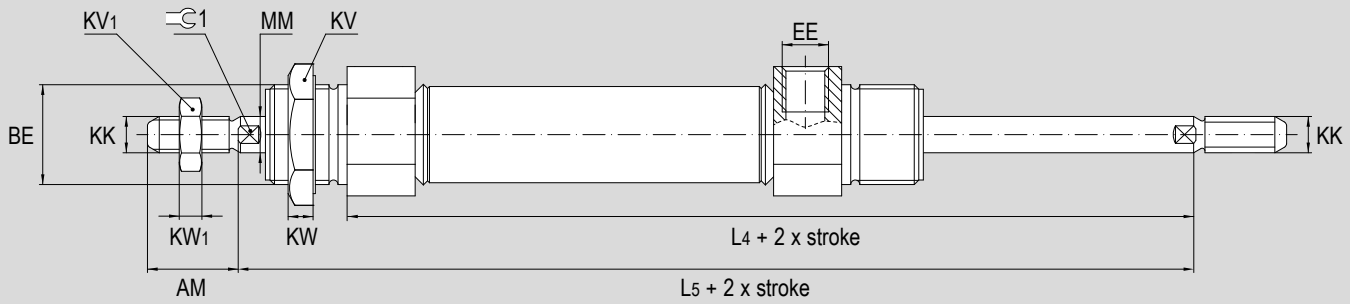

Type: **...B**

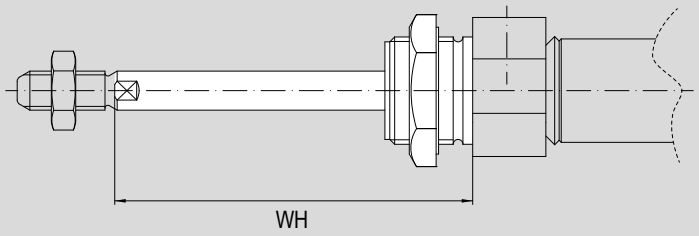

Ø mm	L_4	L_5	EE	BE	KK	KW	KW_1	1	KV_1	KV	MM	AM	WH
16	80	102	M5	M16x1,5	M6x1	8	3,5	5	12	24	6	16	-
20	83	107	G1/8”	M22x1,5	M8x1,25	6	5	7	14	27	8	20	72
25	92	120	G1/8”	M22x1,5	M10x1,25	6	6	9	17	27	10	22	74

Cylinders ISO 6432
Series MD - MDM

Main features

8 ÷ 25 — Bores Ø

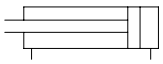

Double acting
Non magnetic

MD — Type

8 ÷ 25 — Bores Ø

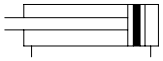

Double acting
Magnetic

MDM — Type



Technical data

Bore Ø mm	8	10	12	16	20	25
Fluid	Filtered compressed air with or without lubrication. Lubrication, if started, must be continued.					
Pressure range	1 ÷ 10 bar					
Temperature range	-20°C ÷ +80°C (standard) -20°C ÷ +150°C (V)					
Strokes	10 ÷ 200 mm		10 ÷ 320 mm	10 ÷ 1000 mm		
Ports	M5				1/8"	
Rod thread	M4		M6		M8	M10x1,25

Standard strokes

Stroke mm	**MD** Bore Ø mm 8	10	12	16	20	25
10						
25						
50						
80						
100						
125						
160						
200						
250						
320						
400						
500						

Stroke mm	**MDM** Bore Ø mm 8	10	12	16	20	25
10						
25						
50						
80						
100						
125						
160						
200						
250						
320						
400						
500						

Key
Standard stroke

Standard dimensions

Type: **MD - MDM**

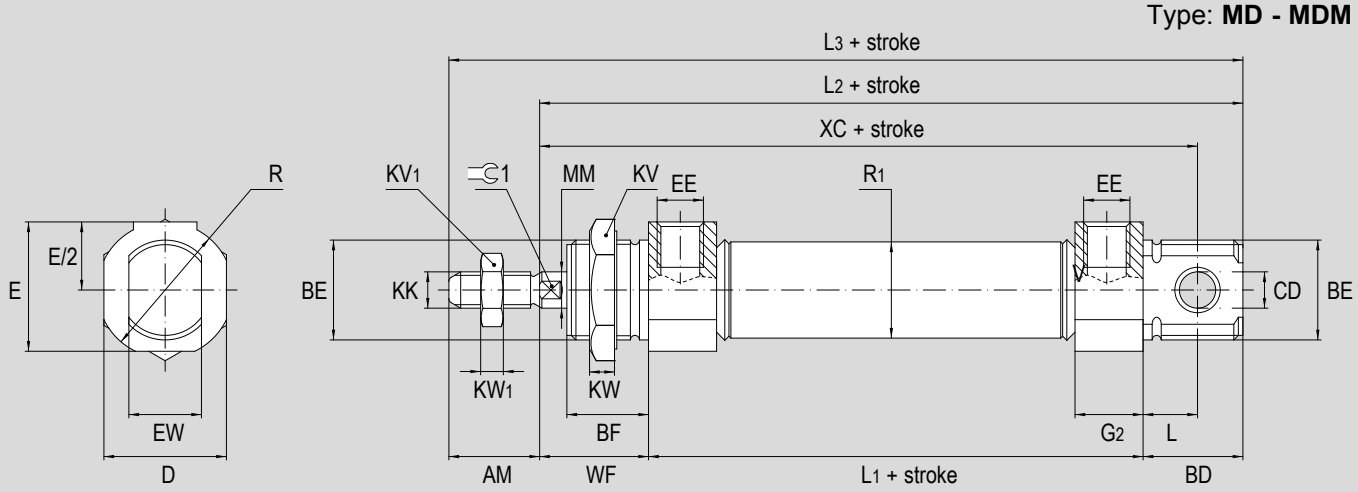

Ø (mm)	KK	MM	BE	R	EW	R_1	E	CD	AM	XC	L_2	L
8	M4x0,7	4	M12x1,25	16	8	9,27	15	4	12	64	74	4
10	M4x0,7	4	M12x1,25	16	8	11,27	15	4	12	64	74	4
12	M6x1	6	M16x1,5	21	12	13,27	18	6	16	75	89	2
16	M6x1	6	M16x1,5	21	12	17,27	19	6	16	82	96	2
20	M8x1,25	8	M22x1.5	30	16	21,27	28,5	8	20	95	105	12
25	M10x1,25	10	M22x1,5	30	16	26,5	28,5	8	22	104	114	12

Ø (mm)	L_1	WF	BF	BD	EE	L_3	D	KW	KW_1	1	KV_1	KV	E/2	G_2
8	46	16	12	12	M5	86	16	7	3	-	7	19	7,5	9
10	46	16	12	12	M5	86	16	7	3	-	7	19	7,5	9
12	51	22	16	16	M5	105	19	8	3,5	5	10	24	10	10
16	58	22	16	16	M5	112	19	8	3,5	5	12	24	10	10
20	59	24	18	22	G1/8”	125	27	6	5	7	14	27	15	15
25	64	28	20	22	G1/8”	136	27	6	6	9	17	27	15	16

Dimensions with options

Type: **...P**

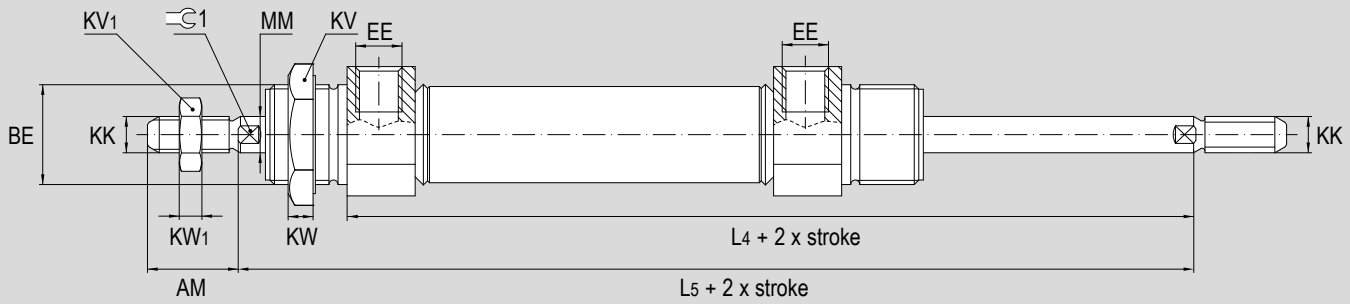

Type: **...B**

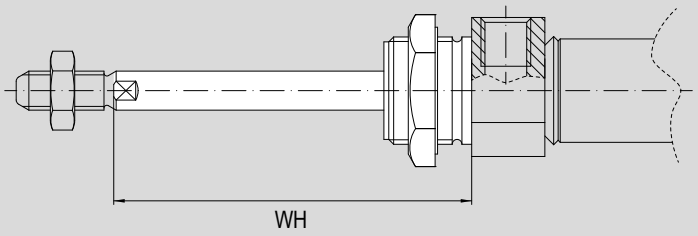

Ø mm	L_4	L_5	EE	BE	KK	KW	KW_1	1	KV_1	KV	MM	AM	WH
16	80	102	M5	M16x1,5	M6x1	8	3,5	5	12	24	6	16	-
20	83	107	G1/8”	M22x1,5	M8x1,25	6	5	7	14	27	8	20	72
25	92	120	G1/8”	M22x1,5	M10x1,25	6	6	9	17	27	10	22	74

Main features

16 ÷ 25

Bores Ø

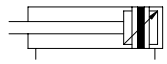

Double acting
Magnetic
With cushioning

MDMA

Type



Technical data

Bore Ø mm	16	20	25
Fluid	Filtered compressed air with or without lubrication. Lubrication, if started, must be continued.		
Pressure range	1 ÷ 10 bar		
Temperature range	-20°C ÷ +80°C (standard) -20°C ÷ +150°C (V)		
Strokes	25 ÷ 1000 mm		
Ports	M5	1/8"	
Rod thread	M6	M8	M10x1,25

Standard strokes

	MDMA Bore Ø mm		
Stroke mm	16	20	25
25	●	●	●
50	●	●	●
80	●	●	●
100	●	●	●
125	●	●	●
160	●	●	●
200	●	●	●
250		●	●
320		●	●
400			
500			

Key
Standard stroke

Standard dimensions

Type: **MDMA**

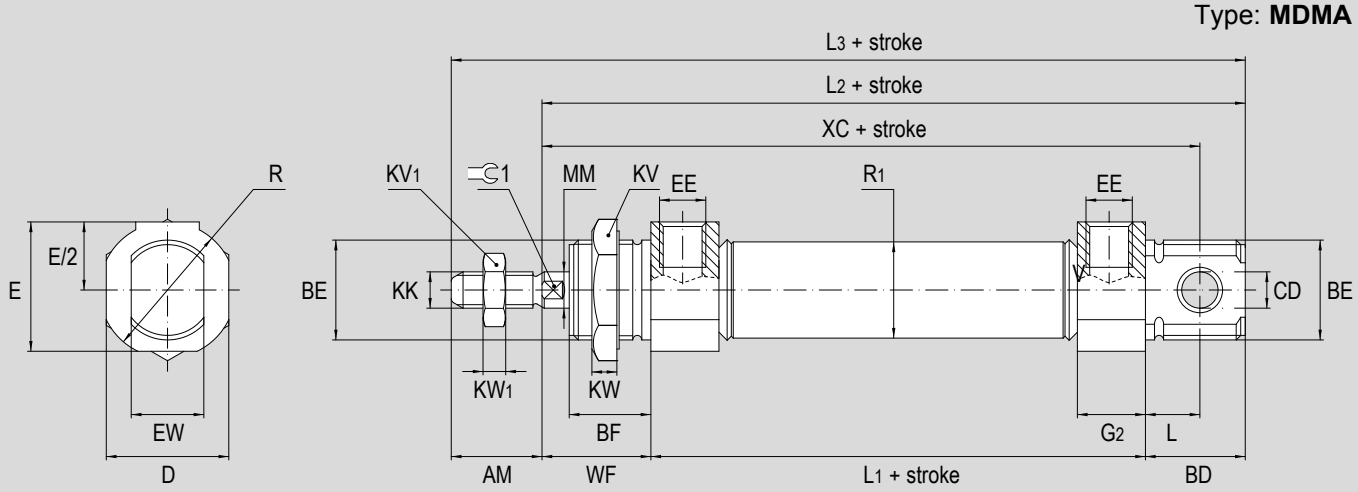

Ø (mm)	KK	MM	BE	R	EW	R_1	E	CD	AM	XC	L_2	L
16	M6x1	6	M16x1,5	21	12	17,27	19	6	16	82	96	2
20	M8x1,25	8	M22x1.5	30	16	21,27	28,5	8	20	95	105	12
25	M10x1,25	10	M22x1,5	30	16	26,5	28,5	8	22	104	114	12

Ø (mm)	L_1	WF	BF	BD	EE	L_3	D	KW	KW_1	1	KV_1	KV	E/2	G_2
16	58	22	16	16	M5	112	19	8	3,5	5	12	24	10	10
20	59	24	18	22	G1/8"	125	27	6	5	7	14	27	15	15
25	64	28	20	22	G1/8"	136	27	6	6	9	17	27	15	16

Dimensions with options

Type: **...P**

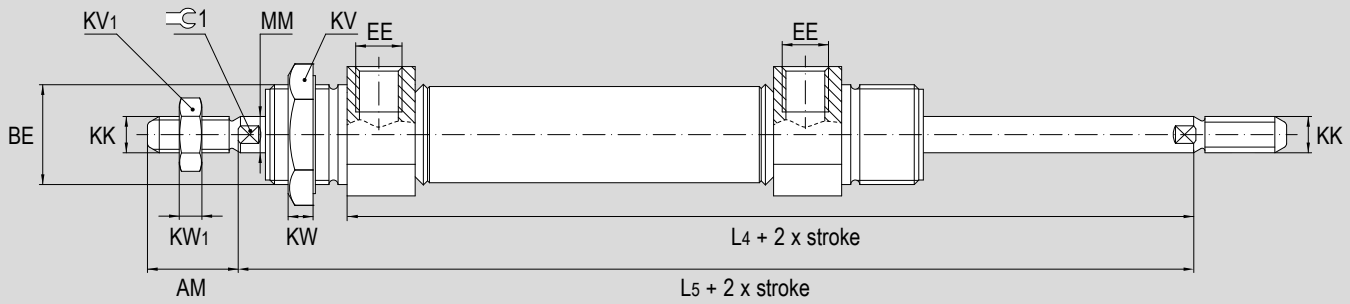

Type: **...B**

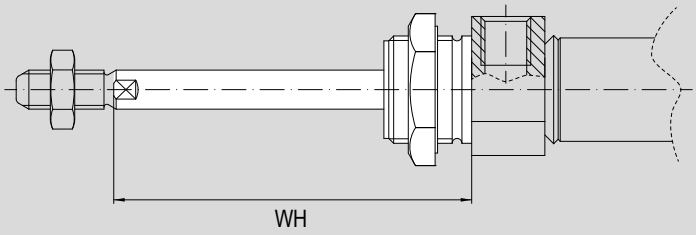

Ø mm	L_4	L_5	EE	BE	KK	KW	KW_1	1	KV_1	KV	MM	AM	WH
16	80	102	M5	M16x1,5	M6x1	8	3,5	5	12	24	6	16	-
20	83	107	G1/8”	M22x1,5	M8x1,25	6	5	7	14	27	8	20	72
25	92	120	G1/8”	M22x1,5	M10x1,25	6	6	9	17	27	10	22	74

Slide unit U-shaped, UGLB..



For cylinder Ø mm	Code	Item	Compliance
12	*	UGLB12/...	-
16	*	UGLB16/...	
20	*	UGLB20/...	
25	*	UGLB25/...	

* for code see page 1.70.3

Slide unit H-shaped, UGPB..



For cylinder Ø mm	Code	Item	Compliance
12	*	UGPB12/...	-
16	*	UGPB16/...	
20	*	UGPB20/...	
25	*	UGPB25/...	

* for code see page 1.70.3

Slide unit H-shaped, UGPS..



For cylinder Ø mm	Code	Item	Compliance
12	*	UGPS12/...	-
16	*	UGPS16/...	
20	*	UGPS20/...	
25	*	UGPS25/...	

* for code see page 1.70.3

Static piston rod brake* normally closed ABS..CRD



For cylinder Ø mm	Code	Item	Compliance
20	042022	ABS020CRD	-
25	042023	ABS025CRD	

Static piston rod brake* normally open ABS..ARD



For cylinder Ø mm	Code	Item	Compliance
20	042032	ABS020ARD	-
25	042033	ABS025ARD	

* option B required

Female clevis with clip FF..ISO



For cylinder Ø mm	Code	Item	Compliance
8-10	041001	FF04ISO/DIN	ISO 8140
12-16	041002	FF06ISO/DIN	
20	041003	FF08ISO/DIN	
25	041004	FF10ISO	

22mm direct mounting solenoid valves A1E1..MD



For cylinder Ø mm	Code	Item	Cylinder matching
20 ÷ 25	034226	A1E130MD	MS MSM

Female clevis with pin and seeger FFP..ISO



For cylinder Ø mm	Code	Item	Compliance
8-10	-	FFP04ISO/DIN	ISO 8140
12-16	-	FFP06ISO/DIN	
20	041049	FFP08ISO/DIN	
25	041051	FFP10ISO	

Female clevis (body only) FFN..ISO



For cylinder Ø mm	Code	Item	Compliance
8-10	041091	FFN04ISO/DIN	ISO 8140
12-16	041011	FFN06ISO/DIN	
20	041018	FFN08ISO/DIN	
25	041014	FFN10ISO	

Bearing heads (DIN 648K) with female thread RF..SE



For cylinder Ø mm	Code	Item	Compliance
8-10	041551	RF5SE	ISO 8139
12-16	041552	RF6SE	
20	041553	RF8SE	
25	041554	RF10SE	

Self-aligning articulated coupling GB..



For cylinder Ø mm	Code	Item	Compliance
8-10	041701	GB008	-
12-16	041702	GB010	
20	041703	GB020	
25	041704	GB040	

Axial articulated coupling RBI..



For cylinder Ø mm	Code	Item	Compliance
12-16	041602	RBI6	-
20	041603	RBI8	
25	041604	RBI10	

Angular articulated coupling RBL..



For cylinder Ø mm	Code	Item	Compliance
12-16	041652	RBL6	-
20	041653	RBL8	
25	041654	RBL10	

Self-aligning coupling GC..

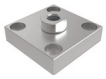

For cylinder Ø mm	Code	Item	Compliance
25	041722	GCM10x1,25	-

Rod nut D..



For cylinder Ø mm	Code	Item	Compliance
8-10	881397	D4x0,7	UNI 5589
12-16	041450	D6x1	
20	041451	D8x1,25ZB	
25	041452	D10x1,25ZB	

Rear clevis in steel with pin and seeger CF..+P



For cylinder Ø mm	Code	Item	Compliance
8-10	040048	CF08-10+P	ISO MP3
12-16	040049	CF12-16+P	
20-25	040050	CF20-25+P	

Kit composed by rear clevis, pin and two seeger.

High foot in steel P..



For cylinder Ø mm	Code	Item	Compliance
8-10	040021	P08-10	ISO MS3
12-16	040022	P12-16	
20-25	040023	P20-25	

Supplied individually.

Flange in steel F..



For cylinder Ø mm	Code	Item	Compliance
8-10	040001	F08-10	ISO MF8
12-16	040002	F12-16	
20-25	040003	F20-25	

Supplied individually.

ATEX magnetic reed switch T groove MK..



For cylinder Ø mm	Code	Item	Compliance	Cylinder matching
8 ÷ 25	071120	MK500A	Ex 3D	MSM* MDM* MDMA*
	071108	MK502A	Ex II1G	

*With bracket type AFM.. for magnetic reed switches T groove

Magnetic reed switch T groove ASV..



For cylinder Ø mm	Code	Item	Cylinder matching
8 ÷ 25	070946	ASV1C525	MSM* MDM* MDMA*
	071863	ASV1C550	
	071864	ASV1C51K	
	071189	ASV1C5M8	
	073639	ASV4D225	
	070246	ASV4D2M8	
	074900	ASV7N225	
	070247	ASV7N2M8	
	070372	ASV7M2M8	
	072918	ASV1H525	

*With bracket type AFM.. for magnetic reed switches T groove

Bracket for magnetic reed switch T groove AFM..



For cylinder Ø mm	Code	Item	Compliance
8	072901	AFM8	-
10	072902	AFM10	
12	072903	AFM12	
16	072904	AFM16	
20	072905	AFM20	
25	072906	AFM25	

Notes

CYLINDERS
ISO 15552



Find out our
key products

- **Solution for most applications**
- **Easy and intuitive choice**
- **Excellent value for money**
- **Wide availability**
- **Fast delivery**

Features and certifications

Series of cylinders conforming to ISO 15552 standards in bores from Ø 32 to 320, double acting, magnetic. The cylinders of these series differ from each other for the heads, light or flat, and the barrel, with profile tube or round tube with tie-rods. Supplied as standard in compliance with Reach and RoHS directives, and SIL certificated. On request, they can be also supplied according to the 2014/34/EU ATEX Directive.
These features, combined with a modern and clean design, and the wide range of applications for which they are suitable place these cylinders among the core products of the company.

ISO 15552 SIL RoHS REACH compliant Ex

Type AMA Ø 32 ÷ 125

from page 1.5.20



Cylinders ISO 15552, available in bores from Ø 32 to 125, double acting magnetic with adjustable cushioning, with profile barrel and two different kind of grooves (T type on the port side, and "C" type on the opposite side), to apply magnetic reed switches directly, and interchange with most competitors.
The design is modern and clean, the heads are light and characterized by powder-coating.

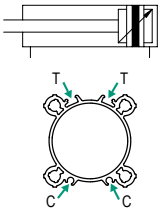

Type AMT Ø 32 ÷ 125

from page 1.5.20



Cylinders ISO 15552, available in bores from Ø 32 to 125, double acting magnetic with adjustable cushioning, made with round tube and tie-rods.
The design is modern and clean, the heads are light and characterized by powder-coating.

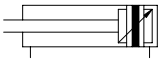

Type BMA Ø 32 ÷ 125

from page 1.5.50



Cylinders ISO 15552, available in bores from Ø 32 to 125, double acting magnetic with adjustable cushioning, with profile barrel and two different kind of grooves (T type on the port side, and "C" type on the opposite side), to apply magnetic reed switches directly, and interchange with most competitors.
The design is modern and clean, the heads are flat.

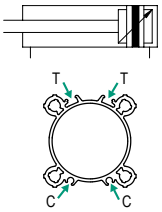

Type BMT Ø 32 ÷ 125

from page 1.5.50



Cylinders ISO 15552, available in bores from Ø 32 to 125, double acting magnetic with adjustable cushioning, made with round tube and tie-rods.
The design is modern and clean, the heads are flat.

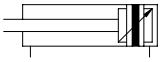

Type AMT Ø 160 ÷ 320

from page 1.5.70



Cylinders ISO 15552, availabe in bores from Ø 160 to 320, double acting magnetic with adjustable cushioning, made with round tube and tie-rods.
The design is characterized by the heads light and powder-coated.

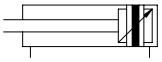

Options

Description	Symbol	Suffix
Through rod	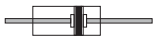	P
Stainless Steel AISI 304 rod	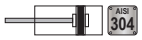	K
Stainless Steel AISI 316 rod	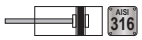	K316
Stainless Steel tie-rods (available only for AMT and BMT type)		K1
Stainless head nuts and rod nut (available only for AMT and BMT type up to Ø 200)	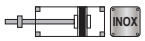	K2
Extended rod in hardened and chrome plated steel suitable for static piston rod brake (available up to Ø 125)	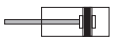	B
Extended rod in hardened and chrome plated steel suitable for dynamic piston rod brake (available up to Ø 100)	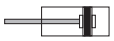	B1
FKM seals -20°C ÷ +150°C	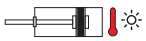	V
FKM rod seal -20°C ÷ +80°C	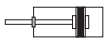	V1
Rod seal scraper in special elastomer for applications in dirty and dusty environment -20°C ÷ +80°C	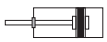	E8
Rod seal scraper in P5600 polyurethane for applications in aggressive environment and for food industry (available up to Ø 200) -20°C ÷ +80°C	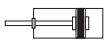	EC
Low temperature seals -40°C ÷ +80°C	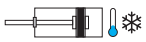	BT
Tandem forward movement piston rods coupled together		TA1
Tandem forward movement piston rods independent		TA2
Tandem back to back	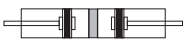	TA3
Tandem front to front	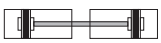	TA4
Extended rod (indicate the requested WH dimension in mm, E.g.: WH=100; for further information please contact the sales department)		WH=..
Without adjustable cushionings	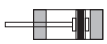	D
Adjustable rear cushioning only	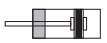	D1
Adjustable front cushioning only	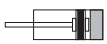	D2
Special male thread (indicate the requested thread. E.g.: R-M 10x1,5; the dimension AM of the special thread will be the same as the standard; cylinder will be supplied without rod nut; for further information please contact the sales department)	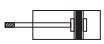	R-M..
Female thread	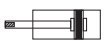	F
With bellow for protection of the rod (in this case the dimension WH should be extended according the stroke of the cylinder; for further information please contact the sales department)	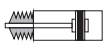	Z
NBR seals -20°C ÷ +80°C	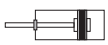	H
NBR rod seal -20°C ÷ +80°C	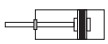	H1
Brass rod scraper (only with H, H1, V, V1 or BT options; for further information please contact the sales department)	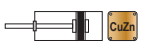	Y
Stainless Steel AISI 316L tube (available only for AMT and BMT type)	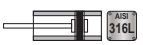	TX
Epoxy coating (RAL 7035)	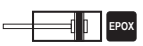	EPX
ATEX versions on request (only with K or K316 options; for further information please contact the sales department)		/ATEX
Special versions on request		/S

The options, when this is possible, can be combined with each other. For options matching see from page 1.5.4; For code key see from page 1.5.6.

Options matching

Series	Bore	Model	Standard options matching											
			P	**K**	**K316**	**K1**	**K2** (Ø32÷200)	**B**	**B1** (Ø32÷100)	**V**	**V1**	**E8**	**EC** (Ø32÷200)	**BT**
AMA-BMA	Ø 32 ÷ 125	Standard	●	●	●	-	-	●	●	●	●	●	●	●
		Through rod (P)		●	●	-	-	●	●	●	●	●	●	●
		Stainless Steel rod (K)	●		-	-	-	-	-	●	●	●	●	●
		Rod brake (B)	●	-	-	-	-		-	●	-	-	-	●
		Female thread (F)	●(7)	●	●	-	-	●	●	●	●	●	●	●
		Bellow (Z)	-	●	●	-	-	-	-	●	●	●	●	●
AMT-BMT	Ø 32 ÷ 125	Standard	●	●	●	●	●	●	●	●	●	●	●	●
		Through rod (P)		●	●	●	●	●	●	●	●	●	●	●
		Stainless Steel rod (K)	●		-	●	●	-	-	●	●	●	●	●
		Rod brake (B)	●	-	-	●	●		-	●	-	-	-	●
		Female thread (F)	●(7)	●	●	●	●	●	●	●	●	●	●	●
		Bellow (Z)	-	●	●	●	●	-	-	●	●	●	●	●
AMT	Ø 160 ÷ 320	Standard	●	●	●	●	●	-	-	●	●	●	●	●
		Through rod (P)		●	●	●	●	-	-	●	●	●	●	●
		Stainless Steel rod (K)	●		-	●	●	-	-	●	●	●	●	●
		Female thread (F)	●(7)	●	●	●	●	-	-	●	●	●	●	●
		Bellow (Z)	-	●	●	●	●	-	-	●	●	●	●	●

Key

● allowed matching; **-** not allowed matching

Options matching notes

(1) Option **WH=..** require to indicate the desired dimension in mm, whereas for some combinations the option **WH=..** should be required or optional. For further information please contact the sales department. If you choose the female thread (option **F**), please indicate the dimension WF=.. and then the actual desired dimension in mm. If combined with through rod option (**P**), the extended rod option (**WH=..**) is applied to one rod side only.

(2) Option **R-M..** require to indicate the desired thread. For further information please contact the sales department.

(3) Option **Y** require that the cylinder mount seals of options **H**, **H1**, **V**, **V1** or **BT**. Not allowed in combination with option **E8** and option **EC**.

(4) In the **/ATEX** versions, is required to mount the stainless steel rod (options **K** or **K316**).

(5) With the options **B** or **B1**, for dimensions S or S1 (WH) please see the table in page 1.5.22 (series AMA and AMT) or page 1.5.52 (series BMA and BMT).

(6) In the models with bellow (option **Z**) should be necessary the extended rod option (**WH=..**) for some bores or strokes. Otherwise the **WH=..** option can be chosen according to the customer's needs. For further information please contact the sales department.

(7) With through rod option (**P**) the option female thread (**F**) and the option special male thread (**R-M..**) are applied on both sides of the rod. While the extended rod option (**WH=..**) is applied to one rod side only.

Standard options matching

TA1	TA2	TA3	TA4	WH=..[1]	D	D1	D2	R-M..[2]	F	Z	H	H1	Y[3]	TX (Ø32÷200)	EPX	/ATEX[4]
●	●	●	●	●	●	●	●	●	●	●	●	●	●	-	●	●
-	-	-	-	●[7]	●	●	-	●[7]	●[7]	-	●	●	●	-	●	●
●	●	●	●	●	●	●	●	●	●	●	●	●	●	-	●	●
-	-	-	-	●[5]	●	●	●	●	●	-	●	●	-	-	-	-
●	●	●	-	●	●	●	●	-		●	●	●	●	-	●	●
-	-	-	-	●[6]	●	●	●	●	●		●	●	-	-	●	●
●	●	●	●	●	●	●	●	●	●	●	●	●	●	●	●	●
-	-	-	-	●[7]	●	●	-	●[7]	●[7]	-	●	●	●	●	●	●
●	●	●	●	●	●	●	●	●	●	●	●	●	●	●	●	●
-	-	-	-	●[5]	●	●	●	●	●	-	●	●	-	●	-	-
●	●	●	-	●	●	●	●	-		●	●	●	●	●	●	●
-	-	-	-	●[6]	●	●	●	●	●		●	●	-	●	●	●
●	●	●	●	●	●	●	●	●	●	●	●	●	●	●	●	●
-	-	-	-	●[7]	●	●	-	●[7]	●[7]	-	●	●	●	●	●	●
●	●	●	●	●	●	●	●	●	●	●	●	●	●	●	●	●
●	●	●	-	●	●	●	●	-		●	●	●	●	●	●	●
-	-	-	-	●[6]	●	●	●	●	●		●	●	-	●	●	●

Code key

Bore	/	Stroke	Type	Options					
63	**/**	**100**	**AMA**	**K**					**V**

- Bore: Ø 32, 40, 50, 63, 80, 100, 125; Ø 160, 200, 250, 320 (AMT tyoe only)
- Stroke: 10 mm ÷ 2800 mm
- Type:

AMA Double acting Magnetic		Ø 32 ÷ 125		
AMT Double acting Magnetic	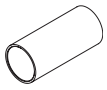	Ø 32 ÷ 125		Ø 160 ÷ 320 
BMA Double acting Magnetic		Ø 32 ÷ 100		Ø 125 
BMT Double acting Magnetic	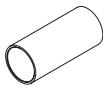	Ø 32 ÷ 100		Ø 125 

- Options:
  - K: K, K316
  - P
  - B: B, B1
  - K1
  - K2
  - V: V, V1, E8, EC, BT, H, H1

How to order

Bore		Stroke	Type	Options
63	**/**	**100**	**AMA**	**K V**

Notes

Options in the same grid are alternative to each others.

For further information on options and their matching, see page 1.5.3 and 1.5.4

For further information on th ATEX 2014/34/EU Directive, on classifications and protections, see from page III.1

Standard* seal kit

Number of components	Description
n. 1	Rod seal
n. 2	Cushioning seal
n. 2	Piston seal
n. 1	Linear rubber ring for piston (damper)
n. 2	Tube-head o-ring
n. 1	Piston guiding ring
n. 2	Adjustment screw o-ring
n. 1	Semipiston o-ring

* For cylinders with options P, H, H1, V, V1 and BT, the kit include further components.

Standard seal kit code key

Cylinder bore	/	Seal kit	/	Cylinder type
63	/	SG	/	AMA

- Cylinder bore: Ø 32, 40, 50, 63, 80, 100, 125, 160*, 200*, 250*, 320* mm
- Seal kit: SG
- Cylinder type: AMA, AMT, BMA, BMT

*AMT type only

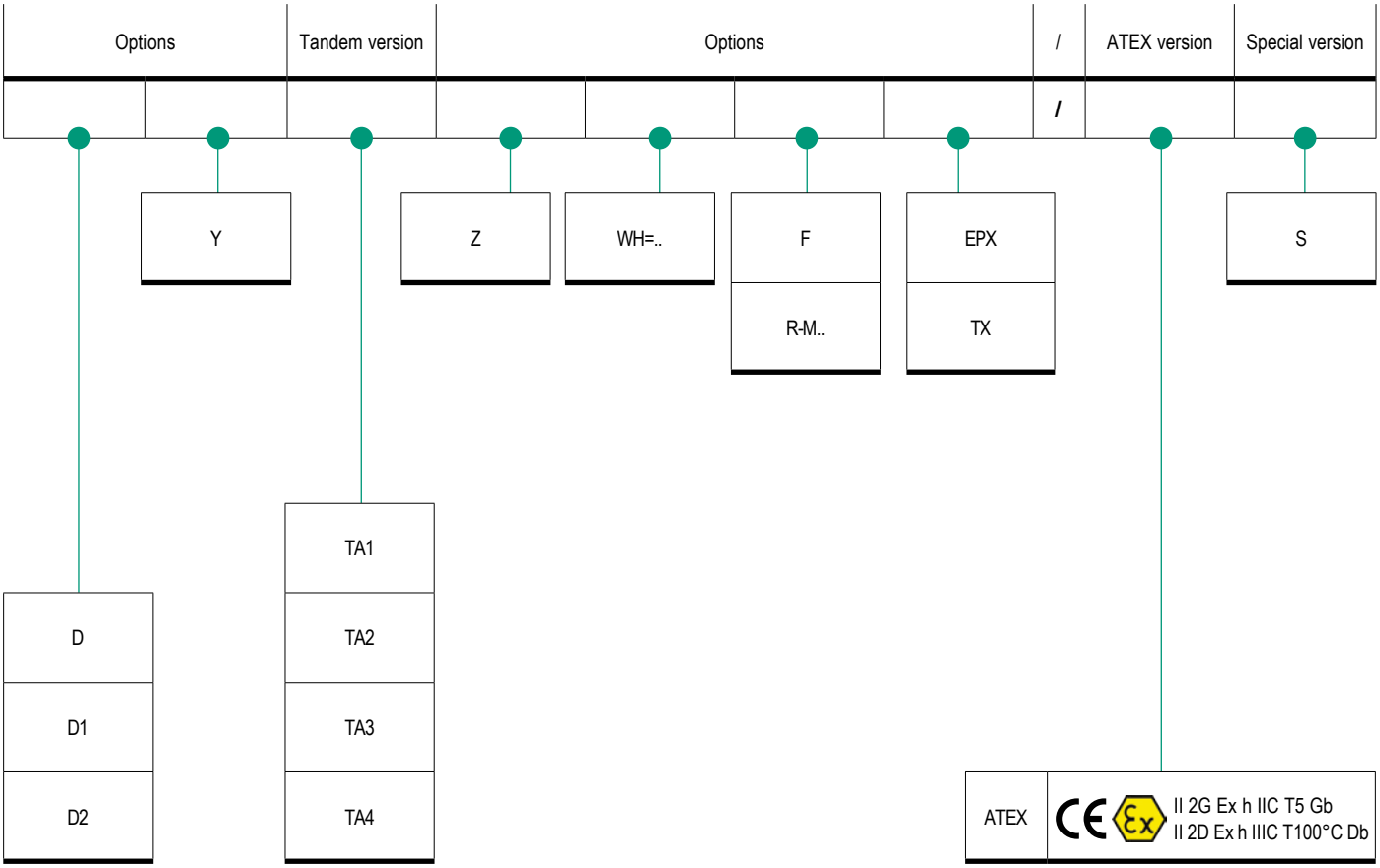

Standard materials

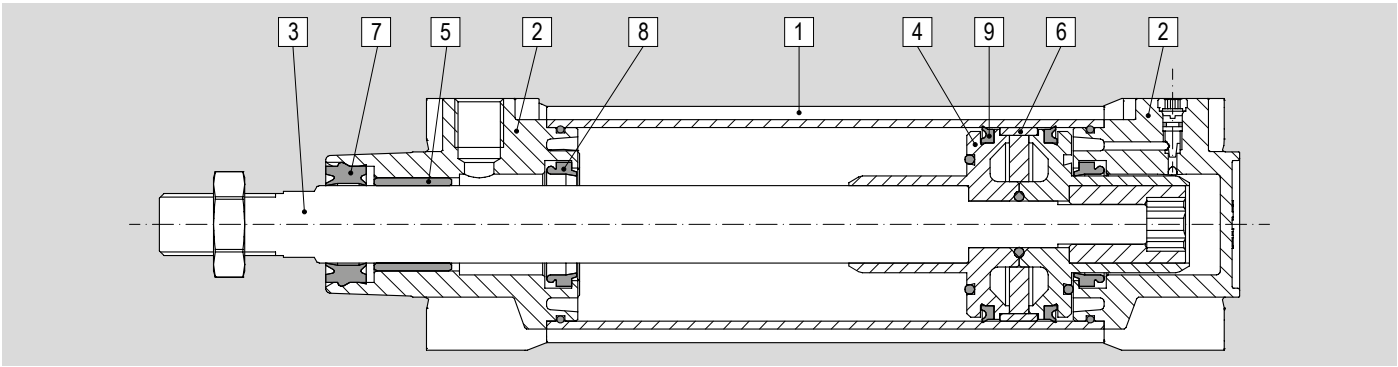

Position	Description	Material	
		Ø 32 ÷ 100	Ø 125 ÷ 320
1	Tube	Anodised aluminium	
2	Heads	Die cast painted aluminium (powder coating for AMA and AMT type, spray for BMA and BMT type)	
3	Rod	Chrome-plated C45 steel	
4	Piston	Die cast painted aluminium	
5	Bushing	Self-lubricating sintered bronze	
6	Guide ring	Acetalic resin (POM)	
7	Rod seals	Polyurethane (PU)	
8	Cushioning seals	Polyurethane (PU)	
9	Piston seals	Polyurethane (PU)	NBR
-	Tie-rods (for type AMT and BMT only)	Zinc-plated steel	
-	Other seals	NBR	

Accessories

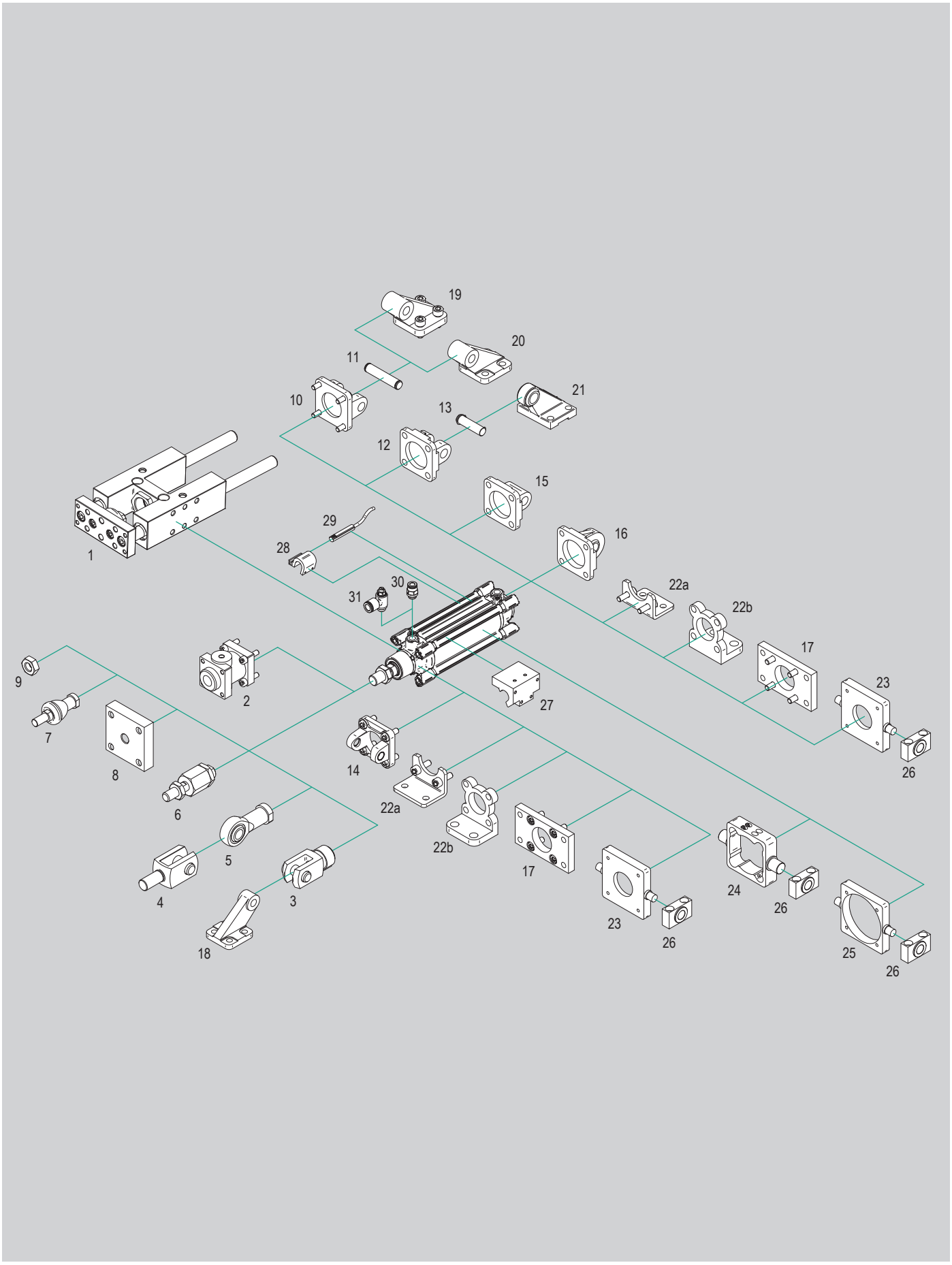

N.	Cylinder bore	Item	Description	Compliance	Matching				Code page	Data sheet page
					AMA	BMA	AMT	BMT		
1	Ø 32 ÷ 100	UGLB	Slide unit U-shaped	-	●	●	●	●	1.5.90	1.70.1
		UGPB UGPS	Slide unit H-shaped		●	●	●	●		
2	Ø 32 ÷ 125	ABS	Static rod brake		●	●	●	●		1.75.1
	Ø 32 ÷ 100	ABK	Dynamic rod brake		●	●	●	●		
3	Ø 32 ÷ 100	FF..ISO	ISO female clevis with clip	ISO 8140	●	●	●	●		1.85.10
	Ø 32 ÷ 320	FFP..ISO	ISO female clevis with pin and seeger		●	●	●	●		
	Ø 32 ÷ 125	FFN..ISO	ISO female clevis (body only)		●	●	●	●	1.5.91	1.85.11
4	-	FEM..	Female clevis with male thread	-	●	●	●	●		1.88.1
5	Ø 32 ÷ 320	RF..SE	Bearing head (DIN 648K) with female thread	ISO 8139	●	●	●	●		1.90.1
6	Ø 32 ÷ 320	GB..	Bearing - Self-aligning articulated coupling	-	●	●	●	●		1.90.10
7	Ø 32 ÷ 100	RBI..	Bearing - Axial articulated coupling		●	●	●	●		1.90.20
		RBL..	Bearing - Angular articulated coupling		●	●	●	●		1.90.30
8	Ø 32 ÷ 200	GC..	Self-aligning coupling		●	●	●	●		1.90.40
9	Ø 32 ÷ 320	D..	Rod nut	UNI 5589	●	●	●	●		1.90.70
10	Ø 32 ÷ 320	CF..ALIS	Rear clevis	ISO MP2	●	●	●	●	1.5.92	1.97.1
		CF..AQIS								1.98.1
11	Ø 32 ÷ 320	SEC..AQIS	Pin with seeger	ISO AA4	●	●	●	●	1.5.95	1.98.5
12	Ø 32 ÷ 250	CFS..ALIS	Narrow rear clevis	ISO AB6	●	●	●	●	1.5.92	1.97.2
	Ø 32 ÷ 125	CFS..AQIS								1.98.1
13	Ø 32 ÷ 250	SEC..ARAQIS	Anti-rotating pin for narrow rear clevis	ISO AA6	●	●	●	●	1.5.95	1.98.5
14	Ø 32 ÷ 200	CFA..	Front clevis	ISO MP7	●	●	●	●	1.5.94	1.97.3
15	Ø 32 ÷ 320	CM..ALIS	Rear eye	ISO MP4	●	●	●	●	1.5.92	
		CM..AQIS								1.98.2
16	Ø 32 ÷ 320	CMS..ALIS	Narrow rear eye with spherical bearing (DIN 648K)	ISO MP6	●	●	●	●		1.97.4
	Ø 32 ÷ 125	CMS..AQIS								1.98.2
17	Ø 32 ÷ 200	FLV..ALIS	Flange	ISO VDMA MF1-MF2	●	●	●	●	1.5.93	1.97.4
	Ø 32 ÷ 320	FLV..AQIS								1.98.4
18	Ø 32 ÷ 250	ASF..ALIS	Clevis hinge	ISO AB7 CETOP RP 107P	●	●	●	●		1.97.5
19	Ø 32 ÷ 250	ASV..ALIS	Rear 90° hinge		●	●	●	●		
	Ø 32 ÷ 125	ASV..AQIS								1.98.3
20	Ø 32 ÷ 200	AS..ALIS		ISO 6431	●	●	●	●	1.5.94	1.97.6
21	Ø 32 ÷ 125	ASS..	Rear 90° hinge with spherical bearing (DIN 648K)	ISO CS7	●	●	●	●		1.98.3
22a	Ø 32 ÷ 320	PB..AQIS	Low foot	ISO MS1	●	●	●	●		1.98.4
22b	Ø 32 ÷ 200	P..ALIS	Foot	ISO MS3	●	●	●	●		1.97.6
23	Ø 32 ÷ 200	CTA..	Center trunnion for heads	ISO MT5/MT6	●	●	●	●		1.98.7
24	Ø 32 ÷ 125	CTS..	Center trunnion (profile barrel)	ISO MT4	●	●	-	-		1.98.6
25	Ø 32 ÷ 320	CTN..	Non adjustable center trunnion (threaded)		-	-	●	●	1.5.93	1.98.7
	Ø 32 ÷ 200	CT..	Adjustable center trunnion (tie-rods)		-	-	●	●		1.98.6
26	Ø 32 ÷ 320	ST..	Support for center trunnion	ISO AT4	●	●	●	●	1.5.94	1.98.8
27	Ø 32 ÷ 200	PSV..	Plate for valves	-	●	●	●	●		2.39.1
28	Ø 32 ÷ 320	AS..	Bracket for T type magnetic reed switches		●	●	●	●	1.5.95	1.120.3
			Bracket for hi-temp. magnetic reed switches							1.120.4
29	Ø 32 ÷ 320	ASV..	Magnetic reed switch T groove		●	●	●	●		1.110.10
		ASC..	Magnetic reed switch C groove		●	●	-	-		1.110.30
		MK..	ATEX magnetic reed switch T groove	2014/34/EU	●	●	●	●		1.113.1
	Ø 32 ÷ 320	ASH..	Hi-temperatures magnetic reed switch	-	●	●	●	●		1.111.1
30	Ø 32 ÷ 320	R..	Push-in fittings		●	●	●	●	4.2.1	
31	Ø 32 ÷ 320	V..C	Flow controls, for cylinders		●	●	●	●	4.94.1	

Key
● matching accessory; - not matching accessory

Main features

32 ÷ 125

Bores Ø

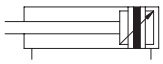

Double acting
Magnetic
With cushioning

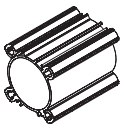

Tube profile

AMA

Type



32 ÷ 125

Bores Ø

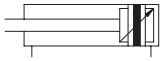

Double acting
Magnetic
With cushioning

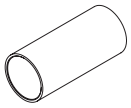

Tube profile

AMT

Type



Technical data

Bore Ø mm			32	40	50	63	80	100	125
Fluid			Filtered compressed air with or without lubrication. Lubrication, if started, must be continued.						
Pressure range			1 ÷ 10 bar						
Temperature range			-20°C ÷ +80°C (standard / V1 / E8 / EC/ H / H1) -20°C ÷ +150°C (V) -40°C ÷ +80°C (BT)						
Strokes			10 ÷ 2800 mm						
Cushion length			20	22	25	25	35	35	35
Port			1/8"	1/4"		3/8"		1/2"	
Rod thread			M10x1,25	M12x1,25	M16x1,5		M20x1,5		M27x2
Weight (g.)	Stroke zero		470	690	1.145	1.483	2.381	3.181	5.284
	Additional 10 mm	AMA	21	29	44	47	69	80	119
		AMT	21	29	44	47	69	80	119

Standard strokes

	AMA Bore Ø mm						
Stroke mm	32	40	50	63	80	100	125
10	●	●	●	●	●		
25	●	●	●	●	●		
50	●	●	●	●	●		
80	●	●	●	●	●		
100	●	●	●	●	●		
125	●	●	●	●	●		
150	●	●	●	●	●		
160	●	●	●	●	●		
200	●	●	●	●	●		
250	●	●	●	●	●		
300	●	●	●	●	●		
320	●	●	●	●	●		
400	●	●	●	●	●		
450	●	●	●	●	●		
500	●	●	●	●	●		

	AMT Bore Ø mm						
Stroke mm	32	40	50	63	80	100	125
10							
25							
50							
80							
100							
125							
150							
160							
200							
250							
300							
320							
400							
450							
500							

Key
Standard stroke

Standard dimensions

Type: **AMA**

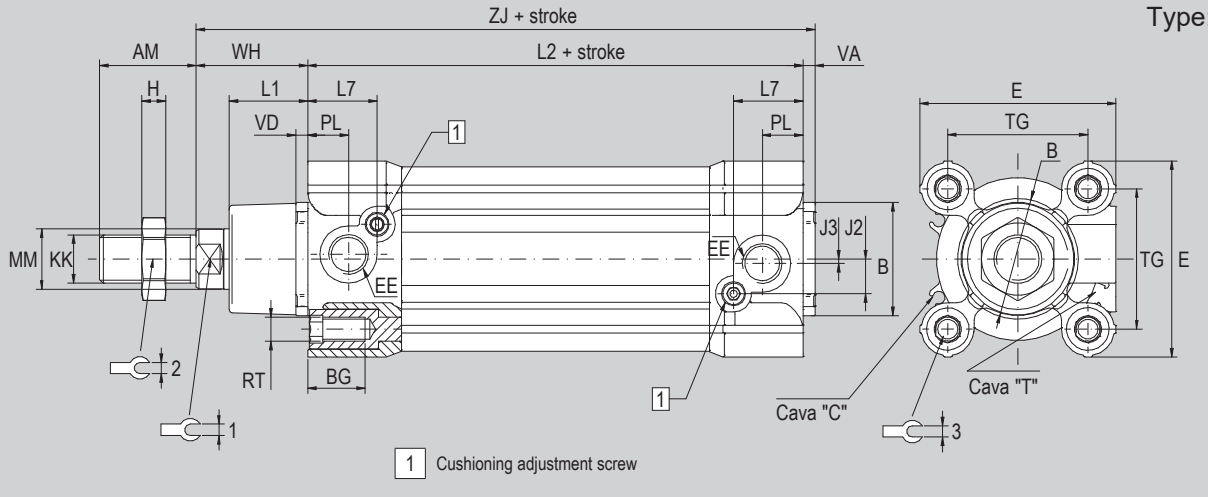

Type: **AMT**

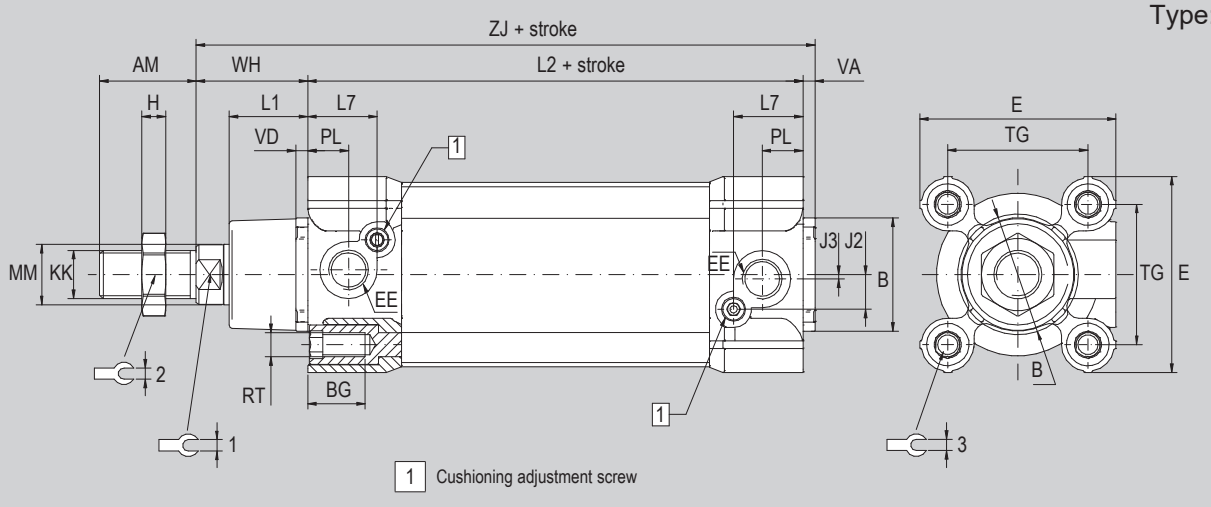

Ø (mm)	AM	ØB d11	BG	E	EE	J2	J3	ØKK	L1	L2	H
32	22	30	15	47	1/8"	7	3,5	M10x1,25	20	94	6
40	24	35	15	52	1/4"	7,5	4	M12x1,25	22	105	7
50	32	40	16	65	1/4"	11,5	1,5	M16x1,5	26	106	8
63	32	45	16	75	3/8"	13,5	1	M16x1,5	25	121	8
80	40	45	17	95	3/8"	13	1	M20x1,5	32	128	9
100	40	55	17	115	1/2"	15	6	M20x1,5	38	138	9
125	54	60	21	140	1/2"	17	8	M27x2	40	160	12

Ø (mm)	L7	ØMM f7	PL	RT	TG	VA	VD	WH	ZJ	1	2	3
32	19,4	12	8,5	M6	32,5	4	4	26	124	10	17	6
40	23	16	10	M6	38	4	4	30	139	13	19	6
50	23	20	13,5	M8	46,5	4	4	37	147	17	24	8
63	23	20	15	M8	56,5	4	4	37	162	17	24	8
80	30	25	21	M10	72	4	4	46	178	22	30	10
100	30,5	25	24	M10	89	4	4	51	193	22	30	10
125	27,5	32	23	M12	110	5	5	65	230	27	41	12

Dimensions with options

Type: **...P**

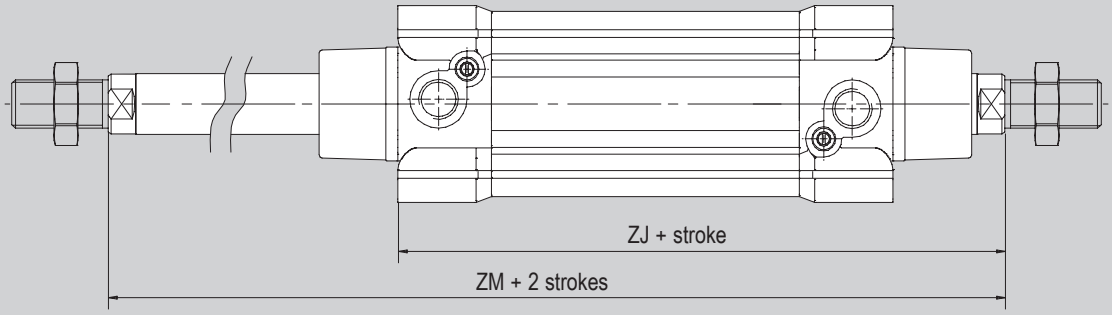

Type: **...B**

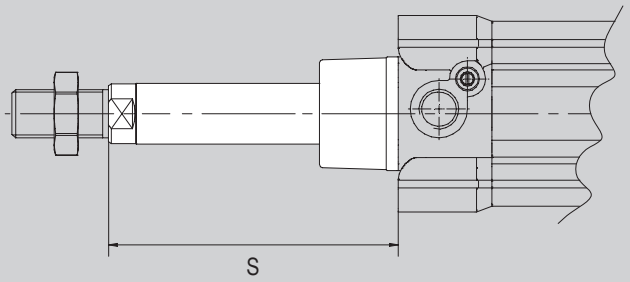

Type: **...B1**

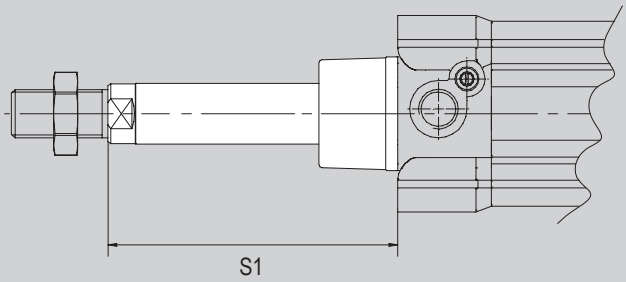

Type: **...F**

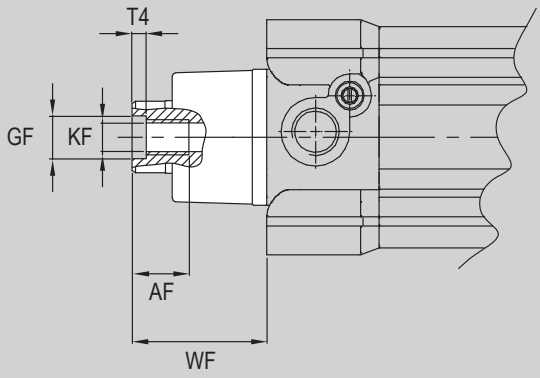

Ø mm	AF	GF	KF	T4	WF	S	S1	ZJ	ZM
32	12	8	M6	2,6	26	74	99	120	146
40	12	10	M8	3,3	30	85	106	135	165
50	16	12	M10	4,7	37	107	127	143	180
63	16	12	M10	4,7	37	107	129	158	195
80	20	14	M12	6,1	46	136	156	174	220
100	20	14	M12	6,1	51	143	181	189	240
125	32	18	M16	8	65	187	-	225	290

Dimensions tandem versions

Type: **...TA1**

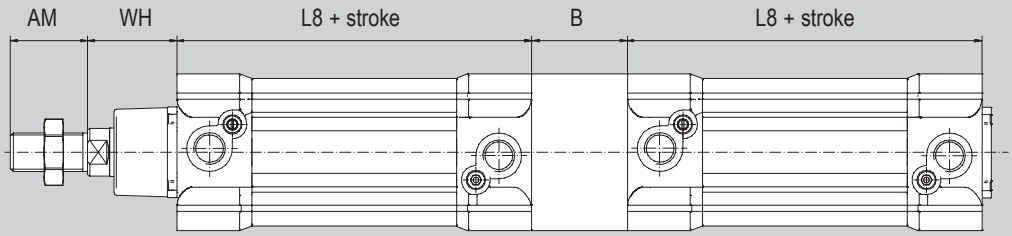

Type: **...TA2**

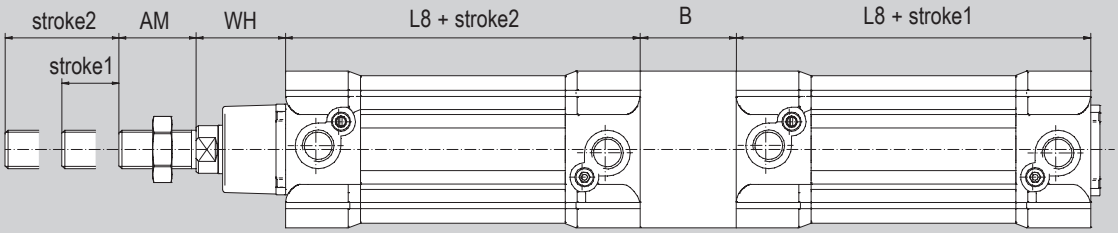

Type: **...TA3**

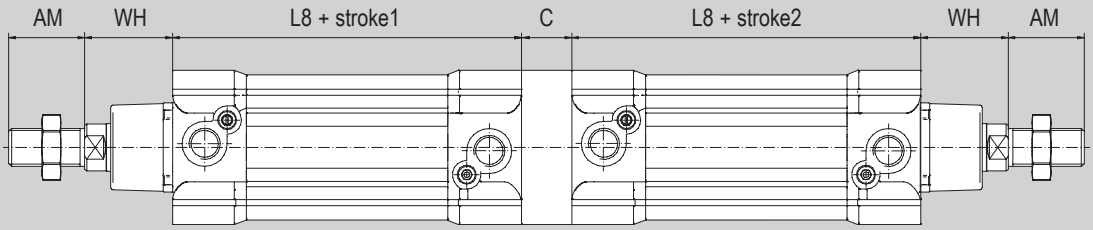

Type: **...TA4**

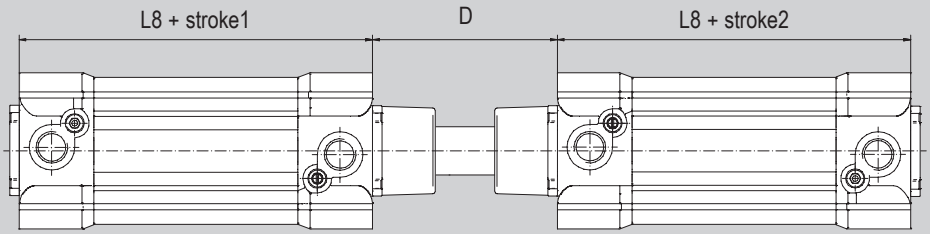

Ø mm	AM	B	C	D	L8	WH
32	22	40	12	48	94	26
40	24	44	12	54	105	30
50	32	52	16	69	106	37
63	32	50	16	69	121	37
80	40	64	20	86	128	46
100	40	76	20	91	138	51
125	54	80	35	120	160	65

Main features

32 ÷ 125	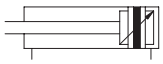	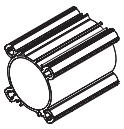	**BMA**
Bores Ø	Double acting Magnetic With cushioning	Tube profile	Type
32 ÷ 125	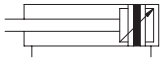	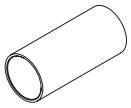	**BMT**
Bores Ø	Double acting Magnetic With cushioning	Tube profile	Type



Technical data

Bore Ø mm			32	40	50	63	80	100	125
Fluid			Filtered compressed air with or without lubrication. Lubrication, if started, must be continued.						
Pressure range			1 ÷ 10 bar						
Temperature range			-20°C ÷ +80°C (standard / V1 / E8 / EC/ H / H1) -20°C ÷ +150°C (V) -40°C ÷ +80°C (BT)						
Strokes			10 ÷ 2800 mm						
Cushion length			20	22	25	25	35	35	35
Port			1/8"	1/4"		3/8"		1/2"	
Rod thread			M10x1,25	M12x1,25	M16x1,5		M20x1,5		M27x2
Weight (g.)	Stroke zero		470	690	1.145	1.483	2.381	3.181	5.284
	Additional 10 mm	AMA	21	29	44	47	69	80	119
		AMT	21	29	44	47	69	80	119

Standard strokes

Stroke mm	**BMA** Bore Ø mm 32	40	50	63	80	100	125
10							
25							
50							
80							
100							
125							
150							
160							
200							
250							
300							
320							
400							
450							
500							

Stroke mm	**BMT** Bore Ø mm 32	40	50	63	80	100	125
10							
25							
50							
80							
100							
125							
150							
160							
200							
250							
300							
320							
400							
450							
500							

Key
Standard stroke

Standard dimensions

Type: **BMA**

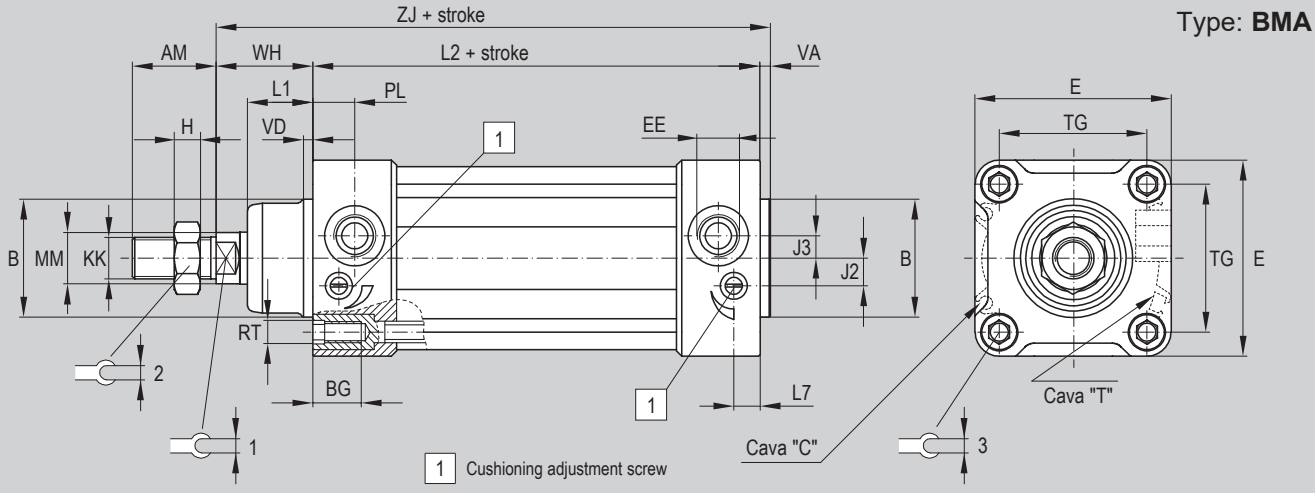

Type: **BMT**

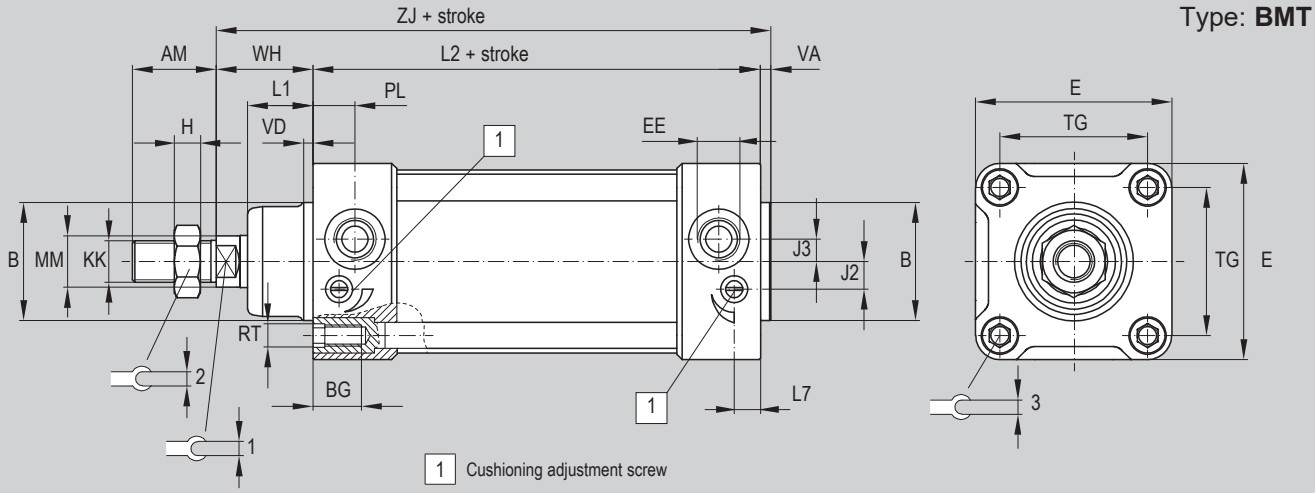

Ø (mm)	AM	ØB d11	BG	E	EE	J2	J3	ØKK	L1	L2	H
32	22	30	15	47	1/8"	5,75	5,25	M10x1,25	20	94	6
40	24	35	15	52	1/4"	8	6	M12x1,25	22	105	7
50	32	40	16	65	1/4"	10,5	6	M16x1,5	26	106	8
63	32	45	16	75	3/8"	10,5	8,5	M16x1,5	25	121	8
80	40	45	17	95	3/8"	14	9,5	M20x1,5	32	128	9
100	40	55	17	115	1/2"	15	10	M20x1,5	38	138	9
125	54	60	21	140	1/2"	20	10	M27x2	40	160	12

Ø (mm)	L7	ØMM f7	PL	RT	TG	VA	VD	WH	ZJ	1	2	3
32	18	12	11	M6	32,5	4	4	26	124	10	17	6
40	20	16	14	M6	38	4	4	30	139	13	19	6
50	20	20	15	M8	46,5	4	4	37	147	17	24	8
63	10	20	16	M8	56,5	4	4	37	162	17	24	8
80	13,5	25	20,5	M10	72	4	4	46	178	22	30	10
100	13	25	20	M10	89	4	4	51	193	22	30	10
125	30	32	25	M12	110	5	5	65	230	27	41	12

Dimensions with options

Type: **...P**

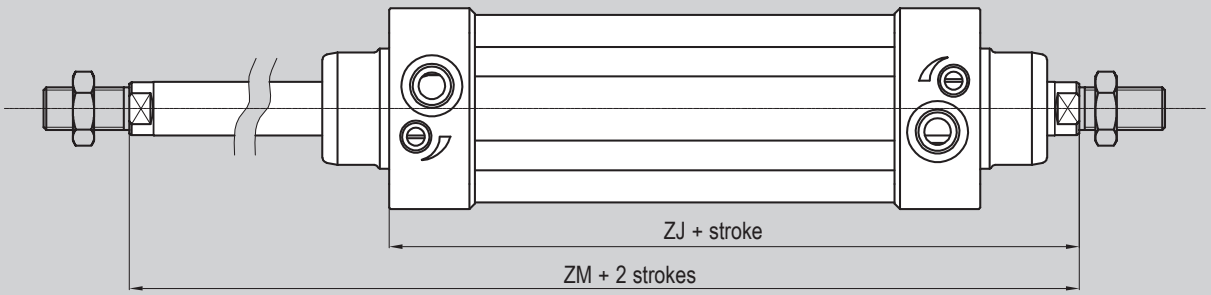

Type: **...B**

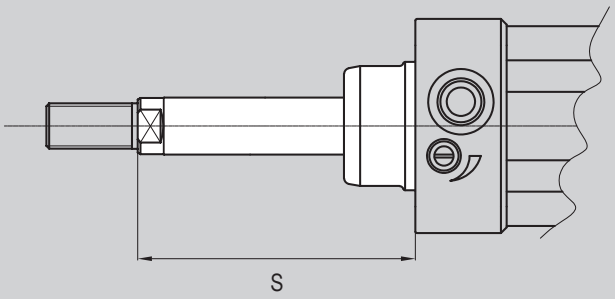

Type: **...B1**

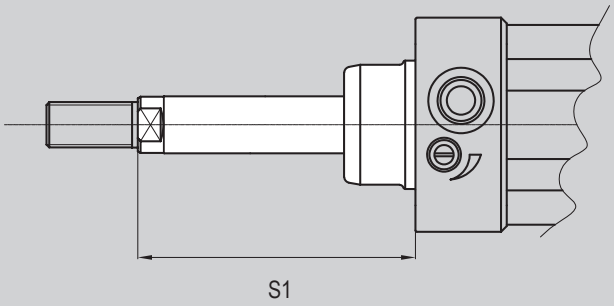

Type: **...F**

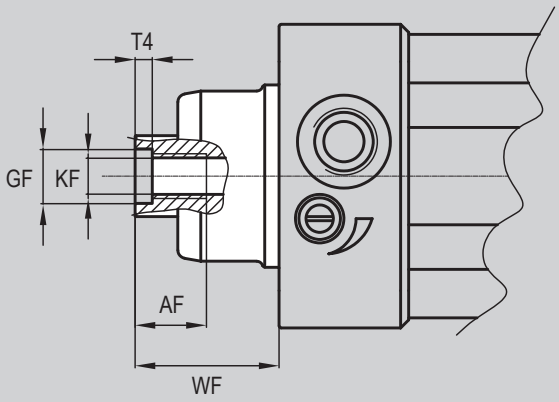

Ø mm	AF	GF	KF	T4	WF	S	S1	ZJ	ZM
32	12	8	M6	2,6	26	74	99	120	146
40	12	10	M8	3,3	30	85	106	135	165
50	16	12	M10	4,7	37	107	127	143	180
63	16	12	M10	4,7	37	107	129	158	195
80	20	14	M12	6,1	46	136	156	174	220
100	20	14	M12	6,1	51	143	181	189	240
125	32	18	M16	8	65	187	-	225	290

Dimensions tandem versions

Type: **...TA1**

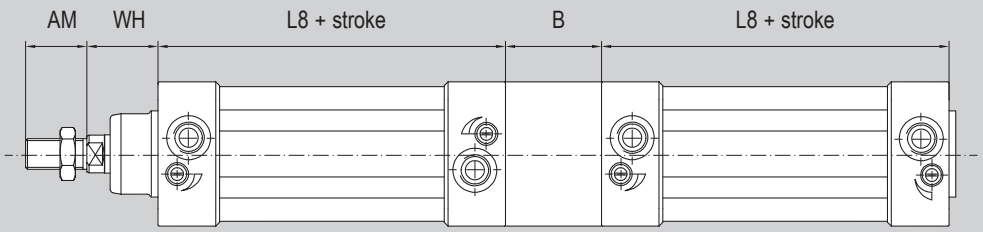

Type: **...TA2**

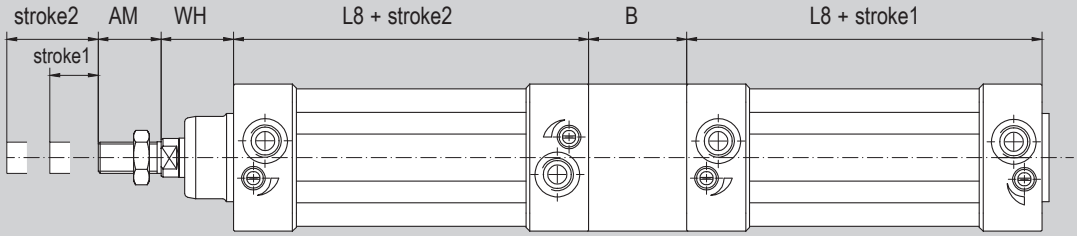

Type: **...TA3**

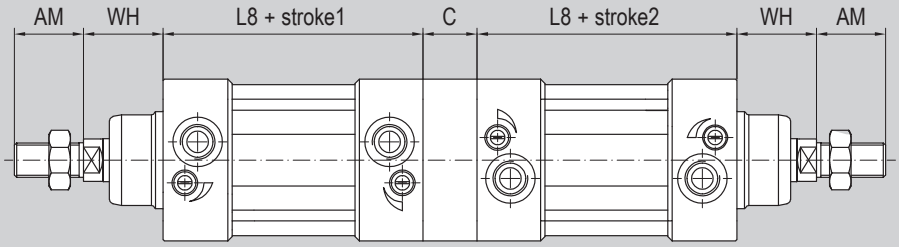

Type: **...TA4**

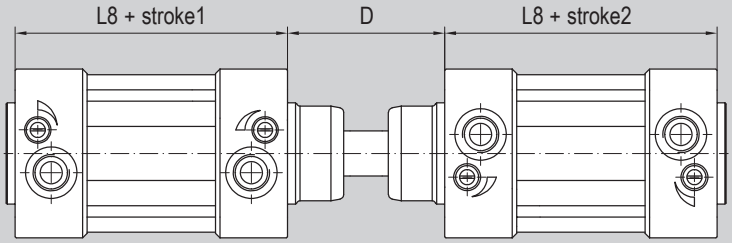

Ø mm	AM	B	C	D	L8	WH
32	22	40	12	48	94	26
40	24	44	12	54	105	30
50	32	52	16	69	106	37
63	32	50	16	69	121	37
80	40	64	20	86	128	46
100	40	76	20	91	138	51
125	54	80	35	120	160	65

Main features

160 ÷ 320
Bores Ø

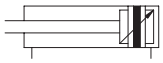
Double acting
Magnetic
With cushioning

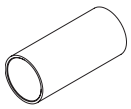
Tube profile

AMT
Type



Technical data

Bore Ø mm		160	200	250	320
Fluid		Filtered compressed air with or without lubrication. Lubrication, if started, must be continued.			
Pressure range		1 ÷ 10 bar			
Temperature range		-20°C ÷ +80°C (standard / V1 / E8 / EC/ H / H1) -20°C ÷ +150°C (V) -40°C ÷ +80°C (BT)			
Strokes		10 ÷ 2800 mm			
Cushion length		46	47	40	40
Port		3/4"		1"	
Rod thread		M36x2		M42x2	M48x2
Weight (g.)	Stroke zero	11.507	14.532	26.811	47.996
	Additional 10 mm	234	250	384	597

Standard strokes

Stroke mm	**AMT** Bore Ø mm			
	160	200	250	320
10				
25				
50				
80				
100				
125				
150				
160				
200				
250				
300				
320				
400				
450				
500				

Key
Standard stroke

Standard dimensions

Type: **AMT**

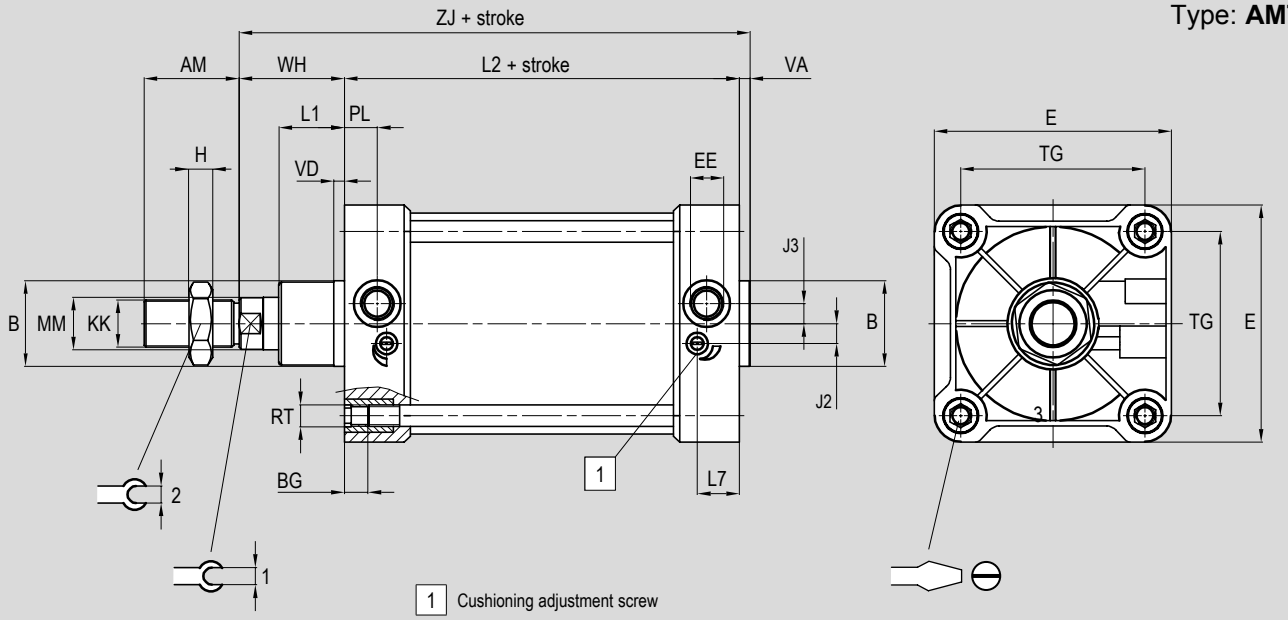

Ø (mm)	AM	ØB d11	BG	E	EE	J2	J3	ØKK	L1	L2	H
160	72	65	24	180	G 3/4	15	15	M36x2	50	180	14
200	72	75	24	220	G 3/4	15	15	M36x2	65	180	14
250	84	90	25	270	G 1	25	25	M42x2	75	200	20
320	96	110	30	350	G 1	35	35	M48x2	90	220	17

Ø (mm)	L7	ØMM f7	PL	RT	TG	VA	VD	WH	ZJ	1	2	⊖
160	32	40	25	M16	140	6	8	80	266	36	55	25x3,7
200	34	40	25	M16	175	6	25	95	281	36	55	25x3,7
250	40	50	30	M20	220	8	25	105	313	46	65	32x5,5
320	45	63	30	M24	270	10	25	120	350	55	75	36x5,5

Dimensions with options

Type: **...P**

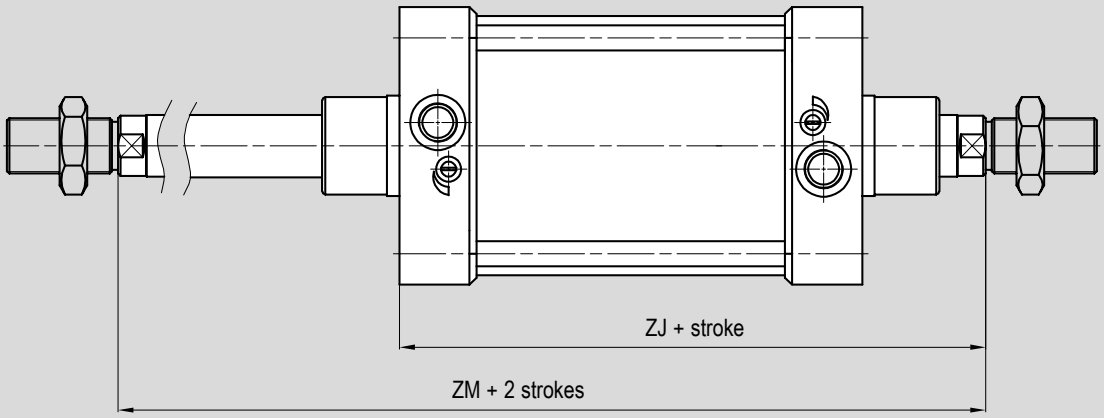

Type: **...F**

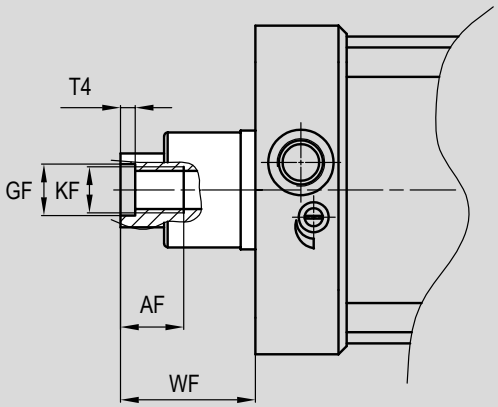

Ø mm	AF	KF	T4	WF	GF	ZJ	ZM
160	36	M20	10	80	22	260	340
200	36	M20	10	95	22	275	370
250	40	M24	12	105	26	305	410
320	50	M30	15	120	32	340	460

Dimensions tandem versions

Type: **...TA1**

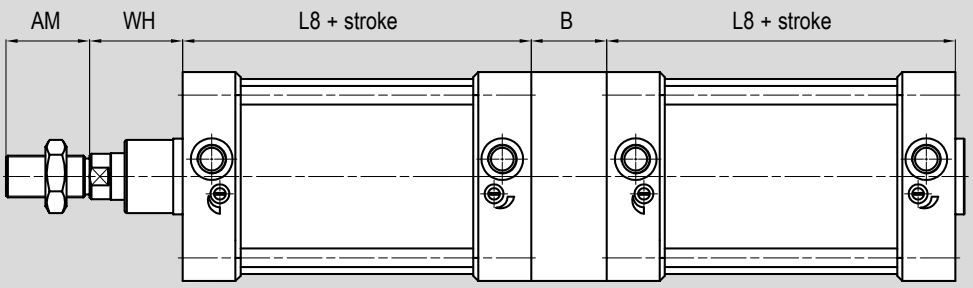

Type: **...TA2**

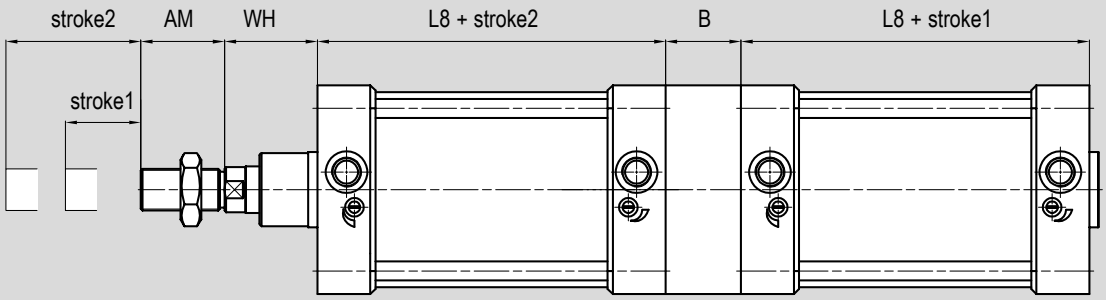

Type: **...TA3**

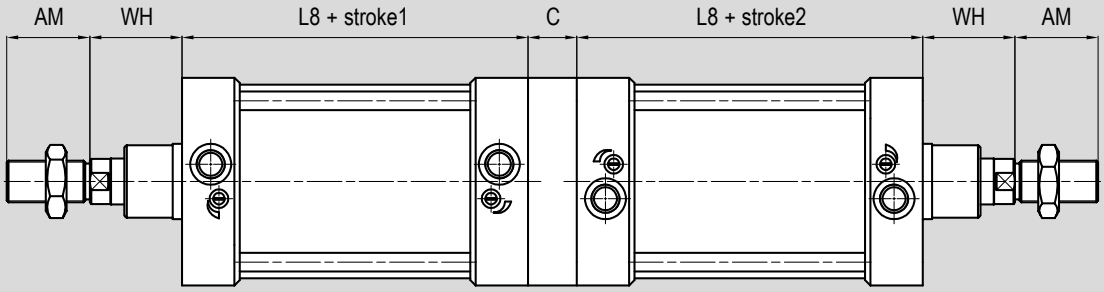

Type: **...TA4**

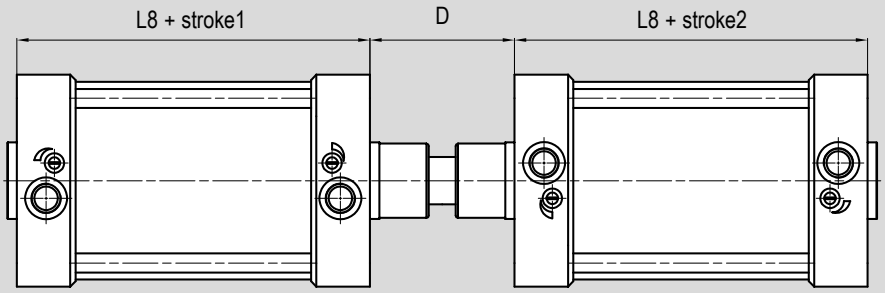

Ø mm	AM	B	C	D	L8	WH
160	72	100	50	152	180	80
200	72	130	50	167	180	95
250	84	150	60	180	200	105
320	96	180	70	200	220	120

Slide unit U-shaped, UGLB..



For cylinder Ø mm	Code	Item	Compliance
32	*	UGLB32/...	-
40	*	UGLB40/...	
50	*	UGLB50/...	
63	*	UGLB63/...	
80	*	UGLB80/...	
100	*	UGLB100/...	

* for code see page 1.70.3

Slide unit H-shaped, UGPB..



For cylinder Ø mm	Code	Item	Compliance
32	*	UGPB32/...	-
40	*	UGPB40/...	
50	*	UGPB50/...	
63	*	UGPB63/...	
80	*	UGPB80/...	
100	*	UGPB100/...	

* for code see page 1.70.3

Slide unit H-shaped, UGPS..



For cylinder Ø mm	Code	Item	Compliance
32	*	UGPS32/...	-
40	*	UGPS40/...	
50	*	UGPS50/...	
63	*	UGPS63/...	
80	*	UGPS80/...	
100	*	UGPS100/...	

* for code see page 1.70.3

Static rod brake* normally closed ABS..CRD



For cylinder Ø mm	Code	Item	Compliance
32	042001	ABS032CRD	-
40	042002	ABS040CRD	
50	042003	ABS050CRD	
63	042004	ABS063CRD	
80	042005	ABS080CRD	
100	042006	ABS100CRD	
125	042007	ABS125CRD	

* option B required

Static rod brake* normally open ABS..ARD



For cylinder Ø mm	Code	Item	Compliance
32	042011	ABS032ARD	-
40	042012	ABS040ARD	
50	042013	ABS050ARD	
63	042014	ABS063ARD	
80	042015	ABS080ARD	
100	042016	ABS100ARD	
125	042017	ABS125ARD	

* option B required

Dynamic rod brake* normally closed ABK..



For cylinder Ø mm	Code	Item	Compliance
32	042035	ABK032	-
40	042036	ABK040	
50	042037	ABK050	
63	042038	ABK063	
80	042039	ABK080	
100	042040	ABK100	

* option B1 required

Female clevis with clip FF..ISO



For cylinder Ø mm	Code	Item	Compliance
32	041004	FF10ISO	ISO 8140
40	041005	FF12ISO	
50-63	041006	FF16ISO	
80-100	041007	FF20ISO	

Female clevis with pin and seeger FFP..ISO



For cylinder Ø mm	Code	Item	Compliance
32	041051	FFP10ISO	ISO 8140
40	041040	FFP12ISO	
50-63	041013	FFP16ISO	
80-100	041017	FFP20ISO	
125	041009	FFP27ISO	
160-200	041010	FFP36ISO	
250	041068	FFP42ISO	
320	041069	FFP48ISO	

Female clevis (body only) FFN..ISO



For cylinder Ø mm	Code	Item	Compliance
32	041014	FFN10ISO	ISO 8140
40	041016	FFN12ISO	
50-63	041012	FFN16ISO	
80-100	041015	FFN20ISO	
125	*	FFN27ISO	
160-200	*	FFN36ISO	
250	*	FFN42ISO	
320	*	FFN48ISO	

* for code please contact the sales department

Female clevis with male thread FEM..



For cylinder Ø mm	Code	Item	Compliance
*	041061	FEM10	-
*	041062	FEM12	
*	041063	FEM16	
*	041064	FEM20	
*	041065	FEM27	

* for matching with bearing heads see page 1.88.1 and page 1.90.1

Bearing heads (DIN 648K) with female thread RF..SE



For cylinder Ø mm	Code	Item	Compliance
32	041554	RF10SE	ISO 8139
40	041555	RF12SE	
50-63	041557	RF16SE	
80-100	041559	RF20SE	
125	041562	RF30SE	
160-200	041563	RF35SE	
250	041571	RF40SE	
320	041572	RF50SE	

Self-aligning articulated coupling GB..



For cylinder Ø mm	Code	Item	Compliance
32	041704	GB040	-
40	041706	GB060	
50-63	041708	GB100	
80-100	041709	GB120	
125	041711	GB130	
160-200	041712	GB160-200	
250	041713	GB250	
320	041714	GB320	

Axial articulated coupling RBI..



For cylinder Ø mm	Code	Item	Compliance
32	041604	RBI10	-
40	041605	RBI12	
50-63	041607	RBI16	
80-100	041609	RBI20	

Angular articulated coupling RBL..



For cylinder Ø mm	Code	Item	Compliance
32	041654	RBL10	-
40	041655	RBL12	
50-63	041657	RBL16	
80-100	041659	RBL20	

Self-aligning coupling GC..



For cylinder Ø mm	Code	Item	Compliance
32	041722	GCM10x1,25	-
40	041723	GCM12x1,25	
50-63	041724	GCM16x1,5	
80-100	041725	GCM20x1,5	
125	041726	GCM27x2	
160-200	041727	GCM36x2	

Rod nut D..



For cylinder Ø mm	Code	Item	Compliance
32	041452	D10x1,25	UNI 5589 DIN 936
40	041454	D12x1,25	
50-63	041455	D16x1,5	
80-100	041456	D20x1,5	
125	041458	D27x2	
160-200	041459	D36x2	
250	041449	D42x2	
320	041477	D48x2	

Rear clevis in aluminium with screws and pin CF..ALIS+VP



For cylinder Ø mm	Code	Item	Compliance
32	042050	CF032ALIS+VP	ISO MP2
40	042051	CF040ALIS+VP	
50	042052	CF050ALIS+VP	
63	042053	CF063ALIS+VP	
80	042054	CF080ALIS+VP	
100	042055	CF100ALIS+VP	
125	042056	CF125ALIS+VP	
160	042057	CF160ALIS+VP	
200	042058	CF200ALIS+VP	
250	042059	CF250ALIS+VP	
320	042060	CF320ALIS+VP	

Rear clevis in aluminium* with screws CF..ALIS+V



For cylinder Ø mm	Code	Item	Compliance
32	040441	CF032ALIS+V	ISO MP2
40	040442	CF040ALIS+V	
50	040443	CF050ALIS+V	
63	040444	CF063ALIS+V	
80	040445	CF080ALIS+V	
100	040446	CF100ALIS+V	
125	040447	CF125ALIS+V	
160	040448	CF160ALIS+V	
200	040449	CF200ALIS+V	
250	040450	CF250ALIS+V	
320	040459	CF320ALIS+V	

* Available also in steel (item CF..AQIS+V) in Ø 32 ÷ 320, see page 1.98.1

Narrow rear clevis in aluminium with screws and pin CFS..ALIS+VP



For cylinder Ø mm	Code	Item	Compliance
32	042110	CFS032ALIS+VP	ISO AB6
40	042111	CFS040ALIS+VP	
50	042112	CFS050ALIS+VP	
63	042113	CFS063ALIS+VP	
80	042114	CFS080ALIS+VP	
100	042115	CFS100ALIS+VP	
125	042116	CFS125ALIS+VP	
160	042117	CFS160ALIS+VP	
200	042118	CFS200ALIS+VP	
250	042148	CFS250ALIS+VP	

Narrow rear clevis in aluminium* with screws CFS..ALIS+V



For cylinder Ø mm	Code	Item	Compliance
32	040451	CFS032ALIS+V	ISO AB6
40	040452	CFS040ALIS+V	
50	040453	CFS050ALIS+V	
63	040454	CFS063ALIS+V	
80	040455	CFS080ALIS+V	
100	040456	CFS100ALIS+V	
125	040457	CFS125ALIS+V	
160	040458	CFS160ALIS+V	
200	040498	CFS200ALIS+V	
250	042499	CFS250ALIS+V	

Available also in steel (item CFS..AQIS+V) in Ø 32 ÷ 125, see page 1.98.1

Rear eye in aluminium* with screws CM..ALIS+V



For cylinder Ø mm	Code	Item	Compliance
32	042061	CM032ALIS+V	ISO MP4
40	042062	CM040ALIS+V	
50	042063	CM050ALIS+V	
63	042064	CM063ALIS+V	
80	042065	CM080ALIS+V	
100	042066	CM100ALIS+V	
125	042067	CM125ALIS+V	
160	042068	CM160ALIS+V	
200	042069	CM200ALIS+V	
250	042070	CM250ALIS+V	
320	042071	CM320ALIS+V	

Available also in steel (item CM..AQIS+V) in Ø 32 ÷ 320, see page 1.98.2

Narrow rear eye with bearing (DIN 648K) in aluminium* with screws CMS..ALIS+V



For cylinder Ø mm	Code	Item	Compliance
32	042101	CMS032ALIS+V	ISO MP6
40	042102	CMS040ALIS+V	
50	042103	CMS050ALIS+V	
63	042104	CMS063ALIS+V	
80	042105	CMS080ALIS+V	
100	042106	CMS100ALIS+V	
125	042107	CMS125ALIS+V	
160	042108	CMS160ALIS+V	
200	042109	CMS200ALIS+V	
250	040160	CMS250ALIS+V	
320	040197	CMS320ALIS+V	

Available also in steel (item CMS..AQIS+V) in Ø 32 ÷ 125, see page 1.98.2

Flange in aluminium with screws FLV..ALIS+V



For cylinder Ø mm	Code	Item	Compliance
32	042150	FLV032ALIS+V	ISO, VDMA, MF1 / MF2
40	042151	FLV040ALIS+V	
50	042152	FLV050ALIS+V	
63	042153	FLV063ALIS+V	
80	042154	FLV080ALIS+V	
100	042155	FLV100ALIS+V	
125	042156	FLV125ALIS+V	
160	042157	FLV160ALIS+V	
200	042158	FLV200ALIS+V	

Flange in steel with screws FLV..AQIS+V



For cylinder Ø mm	Code	Item	Compliance
32	042119	FLV032AQIS+V	ISO, VDMA, MF1 / MF2
40	042120	FLV040AQIS+V	
50	042121	FLV050AQIS+V	
63	042122	FLV063AQIS+V	
80	042123	FLV080AQIS+V	
100	042124	FLV100AQIS+V	
125	042125	FLV125AQIS+V	
160	042126	FLV160AQIS+V	
200	042127	FLV200AQIS+V	
250	042128	FLV250AQIS+V	
320	040683	FLV320AQIS+V	

Rear 90° hinge in aluminium* with screws ASV..ALIS+V



For cylinder Ø mm	Code	Item	Compliance
32	042081	ASV032ALIS+V	ISO AB7, cetop RP 107P
40	042082	ASV040ALIS+V	
50	042083	ASV050ALIS+V	
63	042084	ASV063ALIS+V	
80	042085	ASV080ALIS+V	
100	042086	ASV100ALIS+V	
125	042087	ASV125ALIS+V	
160	042088	ASV160ALIS+V	
200	042089	ASV200ALIS+V	
250	042090	ASV250ALIS+V	

*Available also in steel (item ASV..AQIS) in Ø 32 ÷ 125, see page 1.98.3

Clevis hinge in aluminium with screws ASF..ALIS+V



For cylinder Ø mm	Code	Item	Compliance
32	042161	ASF032ALIS+V	cetop RP 107P
40	042162	ASF040ALIS+V	
50	042163	ASF050ALIS+V	
63	042164	ASF063ALIS+V	
80	042165	ASF080ALIS+V	
100	042166	ASF100ALIS+V	
125	042167	ASF125ALIS+V	
160	042168	ASF160ALIS+V	
200	042169	ASF200ALIS+V	
250	042170	ASF250ALIS+V	

Adjustable center trunnion (tie rods)* in steel with grains CT..AQIS+GR



For cylinder Ø mm	Code	Item	Compliance
32	040581	CT032AQIS+GR	ISO MT4
40	040582	CT040AQIS+GR	
50	040583	CT050AQIS+GR	
63	040584	CT063AQIS+GR	
80	040585	CT080AQIS+GR	
100	040586	CT100AQIS+GR	
125	040587	CT125AQIS+GR	
160	040588	CT160AQIS+GR	
200	040589	CT200AQIS+GR	

*For trunnion mounted on the cylinder, please order togheter with the cylinder.

Non adjustable round trunnion (threaded)* in steel CTN..AQIS



For cylinder Ø mm	Code	Item	Compliance
32	040052	CTN032AQIS	ISO MT4
40	040053	CTN040AQIS	
50	048590	CTN050AQIS	
63	040564	CTN063AQIS	
80	040096	CTN080AQIS	
100	040097	CTN100AQIS	
125	040098	CTN125AQIS	
160	040099	CTN160AQIS	
200	040100	CTN200AQIS	
250	040110	CTN250AQIS	
320	040590	CTN320AQIS	

*For trunnion mounted on the cylinder, please order togheter with the cylinder, indicating the XV dimension (cannot be modified), see page 1.98.7

Center trunnion (profile barrel)* in steel with grains CTS..AQIS+GR



For cylinder Ø mm	Code	Item	Compliance
32	040601	CTS032AQIS+GR	ISO MT4
40	040602	CTS040AQIS+GR	
50	040603	CTS050AQIS+GR	
63	040604	CTS063AQIS+GR	
80	040605	CTS080AQIS+GR	
100	040606	CTS100AQIS+GR	
125	040607	CTS125AQIS+GR	

*For trunnion mounted on the cylinder, please order togheter with the cylinder.

Center trunnion for heads in steel with screws CTA..AQIS+V



For cylinder Ø mm	Code	Item	Compliance
32	040591	CTA032AQIS+V	ISO MT5/MT6
40	040592	CTA040AQIS+V	
50	040593	CTA050AQIS+V	
63	040594	CTA063AQIS+V	
80	040595	CTA080AQIS+V	
100	040596	CTA100AQIS+V	
125	040598	CTA125AQIS+V	

Front clevis in aluminium with screws CFA..ALIS+V



For cylinder Ø mm	Code	Item	Compliance
32	040473	CFA032ALIS+V	ISO MP7
40	040474	CFA040ALIS+V	
50	040017	CFA050ALIS+V	
63	040471	CFA063ALIS+V	
80	040051	CFA080ALIS+V	
100	040478	CFA100ALIS+V	
125	040475	CFA125ALIS+V	
160	040477	CFA160ALIS+V	
200	040479	CFA200ALIS+V	

Low foot in steel* with screws PB..AQIS+V



For cylinder Ø mm	Code	Item	Compliance
32	042129	PB032AQIS+V	ISO MS1
40	042130	PB040AQIS+V	
50	042131	PB050AQIS+V	
63	042132	PB063AQIS+V	
80	042133	PB080AQIS+V	
100	042134	PB100AQIS+V	
125	042135	PB125AQIS+V	
160	042136	PB160AQIS+V	
200	042137	PB200AQIS+V	
250	042138	PB250AQIS+V	
320	042139	PB320AQIS+V	

*Supplied individually and available also in version foot, made of aluminium (item P..ALIS), in Ø 32 ÷ 250, see page 1.97.6

Rear 90° hinge with bearing (DIN 648K) in steel ASS..AQIS



For cylinder Ø mm	Code	Item	Compliance
32	040551	ASS032AQIS	ISO CS7
40	040552	ASS040AQIS	
50	040553	ASS050AQIS	
63	040554	ASS063AQIS	
80	040555	ASS080AQIS	
100	040556	ASS100AQIS	
125	040557	ASS125AQIS	

Rear 90° hinge in aluminium AS..ALIS



For cylinder Ø mm	Code	Item	Compliance
32	040361	AS032ALIS	ISO 6431
40	040362	AS040ALIS	
50	040363	AS050ALIS	
63	040364	AS063ALIS	
80	040365	AS080ALIS	
100	040366	AS100ALIS	
125	040367	AS125ALIS	
160	040368	AS160ALIS	
200	040369	AS200ALIS	

Support for center trunnion* in steel ST..AQIS



For cylinder Ø mm	Code	Item	Compliance
32	040681	ST032AQIS	ISO AT4
40-50	040682	ST040/050AQIS	
63-80	040684	ST063/080AQIS	
100-125	040686	ST100/125AQIS	
160-200	040688	ST160/200AQIS	

*Supplied individually

Plate for valves* PSV..



For cylinder Ø mm	Code	Item	Compatibilità taglia valvola*
32-40	071458	PSV/A1/AMA-32-40	1/8" - 1/4"
50-63	071459	PSV/A1/AMA-50-63	
80÷125	071460	PSV/A1/AMA-80-100-125	1/8" - 1/4" - 1/2"
160-200	070822	PSV/A1/AMT-160-200	1/4" - 1/2"

*For valves series A1 see from page 2.20.1

Anti-rotating pin with seeger* in steel SEC..ARAQIS



For cylinder Ø mm	Code	Item	Compliance
32	040571	SEC032ARAQIS	ISO AA6
40	040572	SEC040ARAQIS	
50	040573	SEC050ARAQIS	
63	040574	SEC063ARAQIS	
80	040575	SEC080ARAQIS	
100	040576	SEC100ARAQIS	
125	040577	SEC125ARAQIS	
160	040578	SEC160ARAQIS	
200	040579	SEC200ARAQIS	

*Supplied with 1 seeger

Pin with seeger* in steel SEC..AQIS



For cylinder Ø mm	Code	Item	Compliance
32	040261	SEC032AQIS	ISO AA4
40	040262	SEC040AQIS	
50	040263	SEC050AQIS	
63	040264	SEC063AQIS	
80	040265	SEC080AQIS	
100	040266	SEC100AQIS	
125	040267	SEC125AQIS	
160	040268	SEC160AQIS	
200	040269	SEC200AQIS	
250	040270	SEC250AQIS	
320	040460	SEC320AQIS	

*Supplied with 2 seeger

Bracket AS.. for magnetic reed switches T groove



For cylinder Ø mm	Code	Item	Cylinder matching
32 ÷ 40	072908	AS101	AMA BMA
50 ÷ 63	072909	AS102	
80 ÷ 100	072910	AS103	
125	072911	AS104	
32 ÷ 40	072912	AS105	AMT BMT
50 ÷ 100	072913	AS106	
125	072909	AS102	
160 ÷ 200	072910	AS103	
250 ÷ 320	072917	AS110	

Bracket AS.. for high-temperatures magnetic reed switches





For cylinder Ø mm	Code	Item	Cylinder matching
32 ÷ 40	077838	AS114	AMA BMA
50 ÷ 63	077651	AS113	
80	074055	AS112	
100	077839	AS115	
125	074007	AS116	
32 ÷ 40	074041	AS117	AMT BMT
50 ÷ 63	074043	AS118	
80 ÷ 100	074087	AS119	
125	074155	AS120	
160 ÷ 200	074169	AS121	

Magnetic reed switch T groove ASV..



For cylinder Ø mm	Code	Item	Cylinder matching
32 ÷ 320	070946	ASV1C525	AMA BMA AMT* BMT*
	071863	ASV1C550	
	071864	ASV1C51K	
	071189	ASV1C5M8	
	073639	ASV4D225	
	070246	ASV4D2M8	
	074900	ASV7N225	
	070247	ASV7N2M8	
	070372	ASV7M2M8	
	072918	ASV1H525	

*With bracket type AS.. for magnetic reed switches T groove

High-temperatures magnetic reed switches ASH..



For cylinder Ø mm	Code	Item	Cylinder matching
32 ÷ 320	074047	ASH6C550	AMA* BMA* AMT* BMT*

*With bracket type AS.. for high-temperatures magnetic reed switches

Magnetic reed switch C groove ASC..



For cylinder Ø mm	Code	Item	Cylinder matching
32 ÷ 320	070248	ASC1C525	AMA BMA
	070249	ASC7N2M8	
	070382	ASC7M2M8	

ATEX magnetic reed switch T groove MK..



For cylinder Ø mm	Code	Item	Compliance	Cylinder matching
32 ÷ 320	071120	MK500A	Ex 3D	AMA BMA AMT* BMT*
	071108	MK502A	Ex II1G	

*With bracket type AS.. for magnetic reed switches T groove

Notes

ROUND CYLINDERS
Series M



Find out our
key products

- **Solution for most applications**
- **Easy and intuitive choice**
- **Excellent value for money**
- **Wide availability**
- **Fast delivery**

Features and certifications

Series of round cylinders not conforming to standards, available in bores from Ø 32 to 63, single acting or double acting, magnetic or non magnetic, with or without cushioning. The heads joined to the barrel through rolling ensure perfect tightening.
Supplied as standard in compliance with Reach and RoHS directives, and SIL certificated. On request, they can be also supplied according to the 2014/34/EU ATEX Directive.

Type MSM Ø 32 ÷ 63

da pag. 1.10.20



Round cylinders not conforming to standards, available in bores from Ø 32 to 63, single acting, magnetic. Heads joined to the barrel through rolling ensure perfect tightening.
Supplied with rod nut and head nut. Possibility of applying one or more magnetic reed switches.

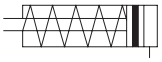

Type MDM Ø 32 ÷ 63

da pag. 1.10.40



Round cylinders not conforming to standards, available in bores from Ø 32 to 63, double acting, magnetic. Heads joined to the barrel through rolling ensure perfect tightening.
Supplied with rod nut and head nut. Possibility of applying one or more magnetic reed switches.

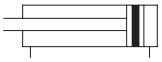

Type MDMA Ø 32 ÷ 63

da pag. 1.10.60



Round cylinders not conforming to standards, available in bores from Ø 32 to 63, double acting, magnetic, adjustable cushioning. Heads joined to the barrel through rolling ensure perfect tightening.
Supplied with rod nut and head nut. Possibility of applying one or more magnetic reed switches.

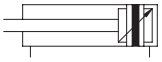

Options

Description	Symbol	Suffix
Rear spring (available only for MSM type)		**T**
Stainless Steel AISI 304 rod	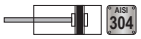	**K**
Read head without thread with radial connection	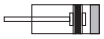	**T1**
Read head without thread with axial connection (not available for MDMA type)	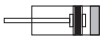	**T2**
Through rod (not available for MSM type)	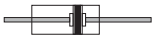	**P**
FKM seals -20°C ÷ +150°C	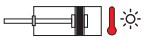	**V**
Low temperature seals -40°C ÷ +80°C	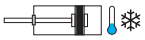	**BT**
Extended rod (indicate the requested WF dimension in mm, E.g.: WF=100; for further information please contact the sales department)	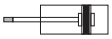	**WF=..**
Special male thread (indicate the requested thread. E.g.: R-M 10x1,5; the dimension AM of the special thread will be the same as the standard; cylinder will be supplied without rod nut; for further information please contact the sales department)	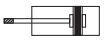	**R-M..**
ATEX versions on request (only with K; for further information please contact the sales department)		**/ATEX**
Special versions on request		**/S**

The options, when this is possible, can be combined with each other. For options matching see from page 1.10.4; For code key see from page 1.10.5

Options matching

Series	Bore	Model	Standard options matching									
			T	**K**	**T1**	**T2**	**P**	**V**	**BT**	**WF=..**[1]	**R-M..**[2]	**/ATEX**[3]
MSM	Ø 32 ÷ 63	Standard	●	●	●	●	-	●	●	●	●	●
		Rear spring (T)		●	●	-	-	●	●	●	●	●
		Stainless Steel rod (K)	●		●	●	-	●	●	●	●	●
		Read head without thread with radial connection (T1)	●	●		-	-	●	●	●	●	●
		Read head without thread with axial connection (T2)	-	●	-		-	●	●	●	●	●
MDM	Ø 32 ÷ 63	Standard	-	●	●	●	●	●	●	●	●	●
		Stainless Steel rod (K)	-		●	●	●	●	●	●	●	●
		Read head without thread with radial connection (T1)	-	●		-	-	●	●	●	●	●
		Read head without thread with axial connection (T2)	-	●	-		-	●	●	●	●	●
		Through rod (P)	-	●	-	-		●	●	●	●	●
MDMA	Ø 32 ÷ 63	Standard	-	●	●	-	●	●	●	●	●	●
		Stainless Steel rod (K)	-		●	-	●	●	●	●	●	●
		Read head without thread with radial connection (T1)	-	●		-	-	●	●	●	●	●
		Through rod (P)	-	●	-	-		●	●	●	●	●

Key
● allowed matching; **-** not allowed matching

Options matching - notes

(1) Option **WF=..** require to indicate the desired dimension in mm. For further information please contact the sales department.
If combined with through rod option (**P**), the extended rod option (**WF=..**) is applied to one rod side only.

(2) Option **R-M..** require to indicate the desired thread. For further information please contact the sales department.
If combined with through rod option (**P**), the special male thread rod option (**R-M..**) is applied on both rod sides.

(3) In the **/ATEX** versions, is required to mount the stainless steel rod (options **K**). For further information please contact the sales department.

Code key

Bore	/	Stroke	Type	Options						/	ATEX version	Special version
40	**/**	**80**	**MDM**		**K**	**P**				**/**		

- Bore: Ø 32, 40, 50, 63
- Stroke: 10 mm ÷ 1000 mm (MSM tyoe up to 50 mm)
- Type: MSM Single acting Magnetic; MDM Double acting Magnetic; MDMA Double acting Magnetic With cushioning
- Options: T; K; T1; T2*; P; V; BT; WF=..; R-M..
- ATEX version: ATEX — II 2G Ex h IIC T5 Gb, II 2D Ex h IIIC T100°C Db
- Special version: S

How to order

Bore		Stroke	Type	Options
40	**/**	**80**	**MDM**	**K P**

Notes

Options in the same grid are alternative to each others.

For further information on options and their matching, see page 1.10.3 and 1.10.4

*Not available for type MDMA

For standard materials see the table below.

For further information on the ATEX 2014/34/EU Directive, on classifications and protections, see from page III.1

Standard materials

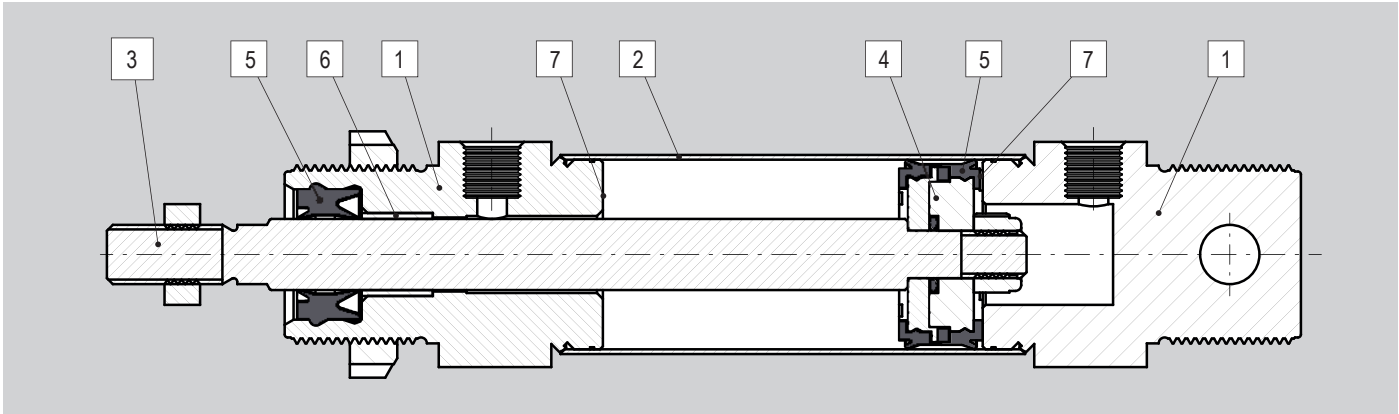

Position	Description	Materials
1	Heads	Anodised aluminium
2	Tube	Stainless Steel AISI 316
3	Rod	Steel C45 chrom-plated
4	Piston	Aluminium
5	Seals	NBR / Polyurethane (PU)
6	Bushing	Self-lubricating sintered bronze
7	Dumper	NBR

Accessories

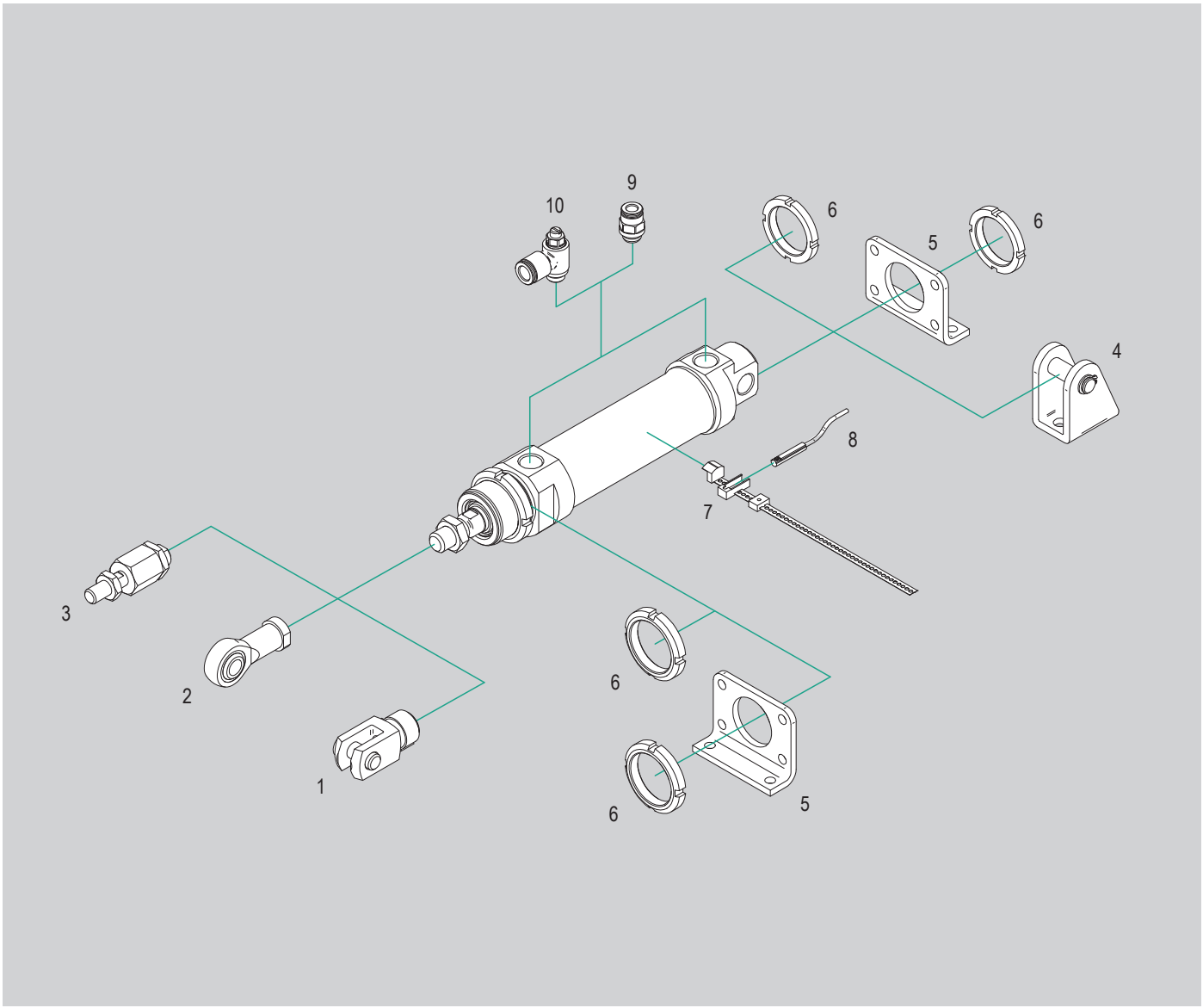

N.	Cylinder bore	Item	Description	Compliance	Matching			Code page	Data sheet page
					MSM	MDM	MDMA		
1	Ø 32 ÷ 63	FF..	ISO female clevis with clip	ISO 8140	●	●	●	1.10.90	1.85.10
		FFP..	ISO female clevis with pin and seeger		●	●	●		
		FFN..	ISO female clevis (body only)		●	●	●		1.85.11
2	Ø 32 ÷ 63	RF..SE	Bearing head (DIN 648K) with female thread	ISO 8139	●	●	●		1.90.1
3	Ø 32 ÷ 63	GB..	Bearing - Self-aligning articulated coupling	-	●	●	●		1.90.10
4	Ø 32 ÷ 63	CF..M	Rear clevis		●	●	●		1.96.2
5	Ø 32 ÷ 63	P..	Foot-flange		●	●	●		1.96.1
6	Ø 32 ÷ 63	GH..	Heads nut		●	●	●		
7	Ø 32 ÷ 63	AFR..	Bracket for T type magnetic reed switches		●	●	●	1.10.91	1.120.1
8	Ø 32 ÷ 63	ASV..	Magnetic reed switch T groove		●	●	●		1.110.10
		MK..	ATEX magnetic reed switch T groove	2014/34/UE	●	●	●		1.113.1
9	Ø 32 ÷ 63	R..	Push-in fittings	-	●	●	●	4.2.1	
10	Ø 32 ÷ 63	V..C	Flow controls, for cylinders		●	●	●	4.94.1	

Key

● matching accessory; – not matching accessory

Main features

32 ÷ 63

Bores Ø

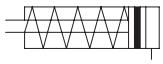

Single acting
Magnetic

MSM

Type



Technical data

Bore Ø mm		32			40			50			63		
Fluid		Filtered compressed air with or without lubrication. Lubrication, if started, must be continued.											
Pressure range		1 ÷ 10 bar											
Temperature range		-20°C ÷ +80°C (standard) -20°C ÷ +150°C (V) -40°C ÷ +80°C (BT)											
Strokes		10 ÷ 50 mm											
Rod thread		M10x1,25			M12x1,25			M16x1,5					
Thrust force at 6 bar (N)		482			754			1178			1869		
Traction force (N)	Stroke (mm)	10	25	50	10	25	50	10	25	50	10	25	50
	min.	57	51	40	98	86	64	147	130	101	147	130	101
	max.	62	62	62	105	105	105	158	158	158	158	158	158

Standard strokes

	MSM Bore Ø mm			
Stroke mm	32	40	50	63
10				
25				
50				

Key
Standard stroke

Standard dimensions

Type: **MSM**

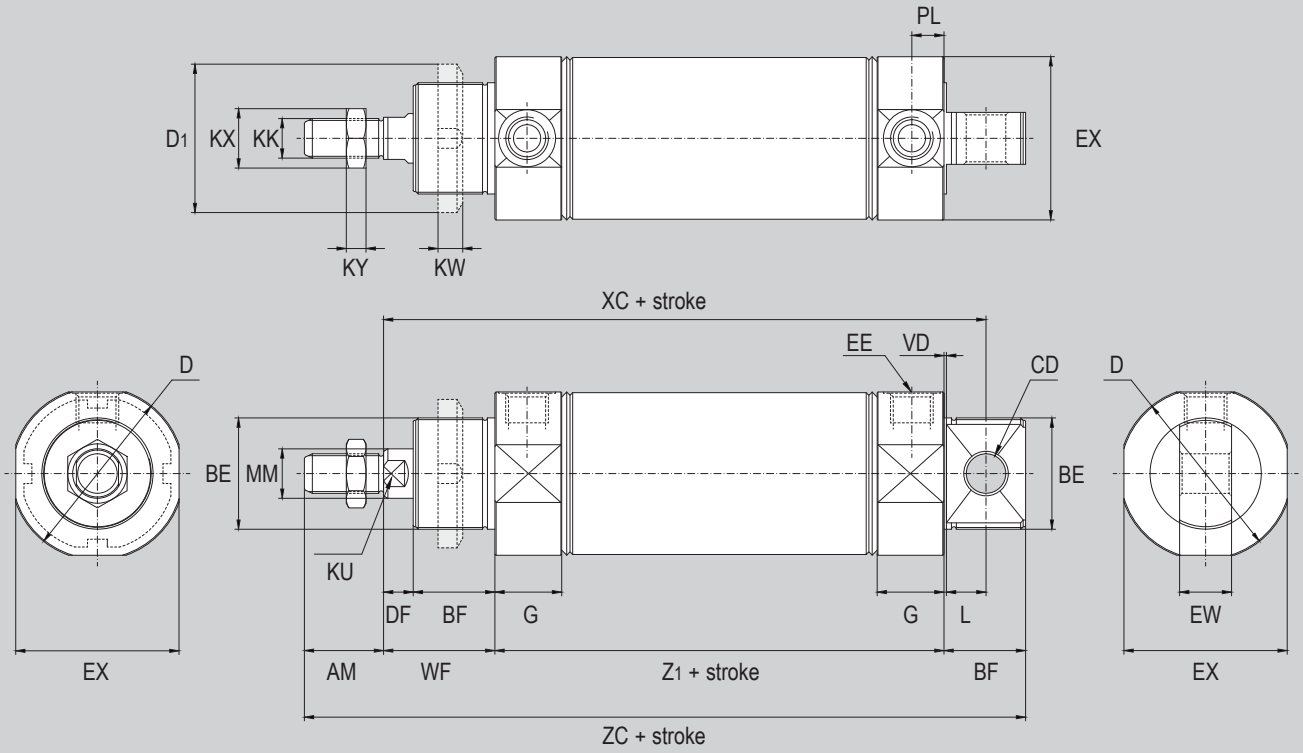

Ø (mm)	AM	BE	BF	CD	ØD	ØD1	DF	EE	EX	EW	G	KK
32	22	M30x1,5	26	10	41	42	8	G1/8"	38	16	19	M10x1,25
40	24	M38x1,5	30	12	49	50	9	G1/4"	45	18	25	M12x1,25
50	32	M45x1,5	33	16	57	60	11	G1/4"	53	21	25	M16x1,5
63	32	M45x1,5	33	16	70	60	12	G3/8"	66	21	27	M16x1,5

Ø (mm)	KU	KW	KX	KY	L	MM	PL	VD	WF	XC	Z1	ZC
32	10	8	17	6	13	12	9	2	34	117,5	69,5	151,5
40	13	10	19	6	15	16	12	3	39	139,6	84,6	177,6
50	17	10	24	8	16	20	12	3	44	147,2	86,2	195,2
63	17	10	24	8	16	20	13	3	45	156,2	94,2	204,2

Standard dimensions

Type: **...T**

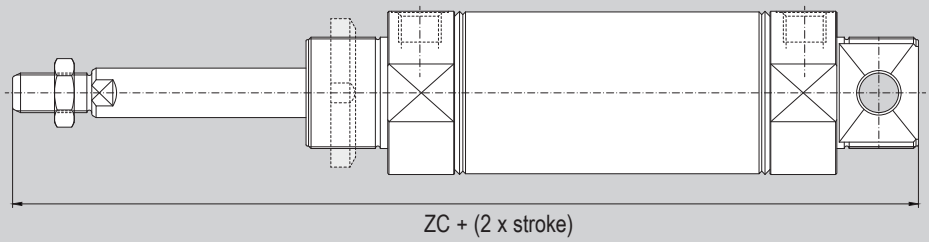

Type: **...T1**

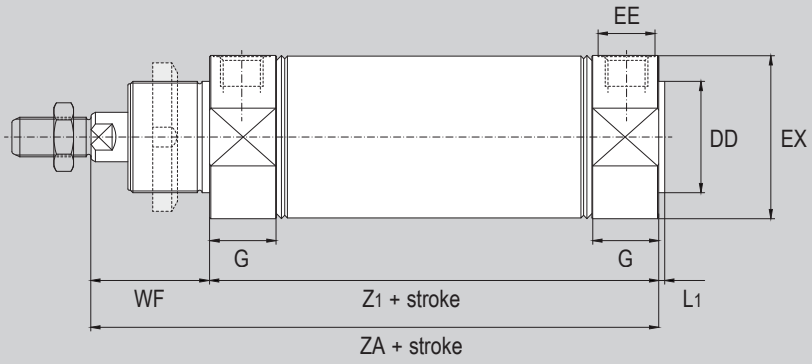

Type: **...T2**

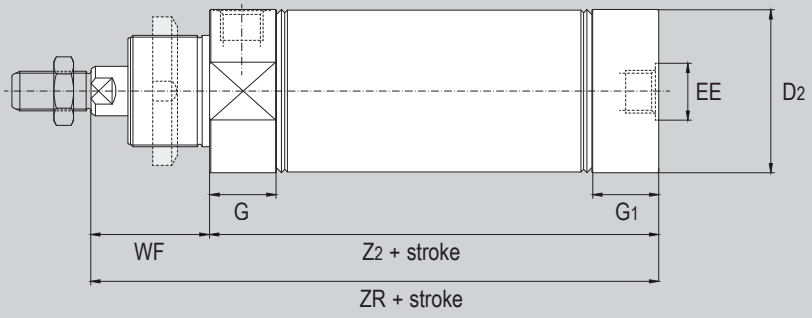

Ø (mm)	G	G1	WF	ZA	ZC	ZR	Z1	Z2	L1	ØDD	ØD2	EX	EE
32	19	15	34	103,5	151,5	99,5	69,5	65,5	3	30	34	38	G1/8"
40	25	18	39	123,6	177,6	116,6	84,6	77,6	4	38	42	45	G1/4"
50	25	25	44	130,2	195,2	130,2	86,2	86,2	4	45	53	53	G1/4"
63	27	27	45	139,2	204,2	139,2	94,2	94,2	4	45	66	66	G3/8"

Round cylinders series M
Series MDM

Main features

32 ÷ 63

Bores Ø

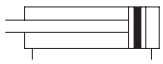

Double acting
Non magnetic

MDM

Type



Technical data

Bore Ø mm	32	40	50	63
Fluid	Aria compressa filtrata con o senza lubrificazione. La lubrificazione se utilizzata deve essere ininterrotta.			
Pressure range	1 ÷ 10 bar			
Temperature range	-20°C ÷ +80°C (standard) -20°C ÷ +150°C (V) -40°C ÷ +80°C (BT)			
Standard strokes	10 ÷ 1000 mm			
Rod thread	M10x1,25	M12x1,25	M16x1,5	

Standard strokes

	MDM Bore Ø mm			
Stroke mm	32	40	50	63
10				
25				
50				
80				
100				
125				
160				
200				
250				
320				
400				
500				

Key
Standard stroke

Standard dimensions

Type: **MDM**

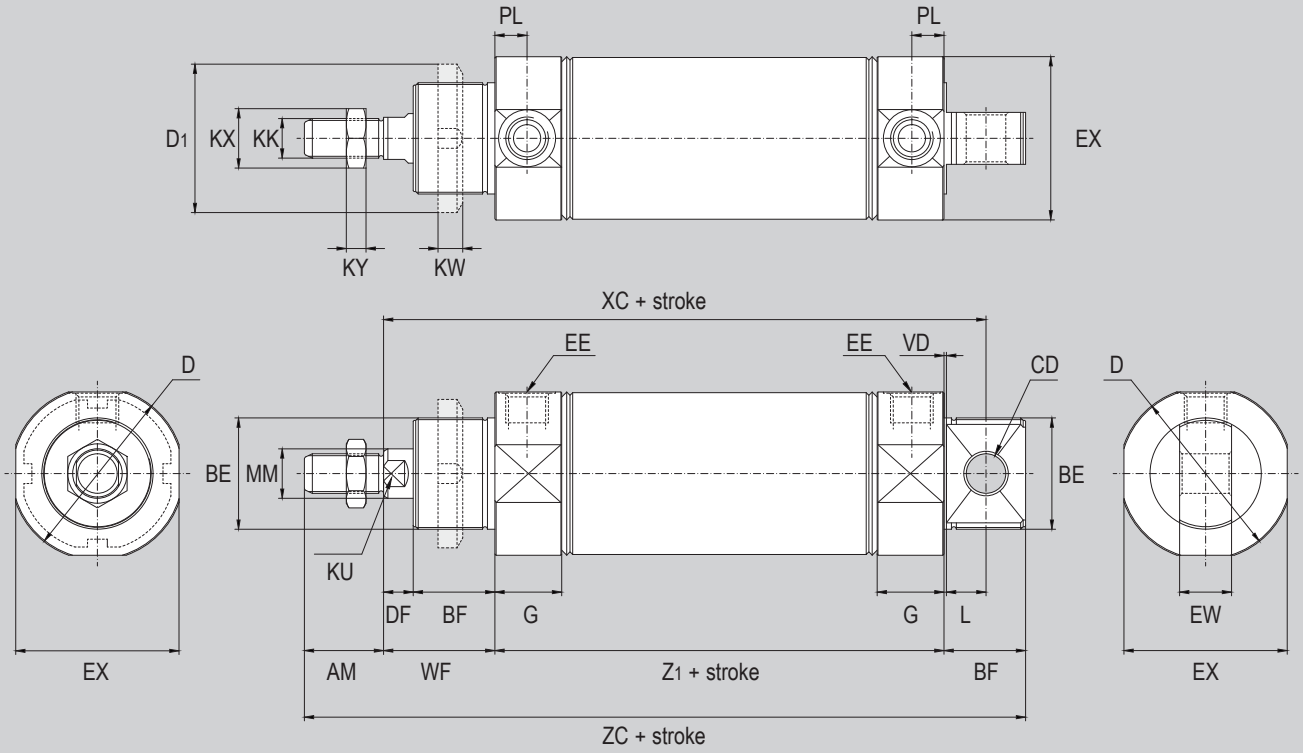

Ø (mm)	AM	BE	BF	CD	ØD	ØD1	DF	EE	EX	EW	G	KK
32	22	M30x1,5	26	10	41	42	8	G1/8"	38	16	19	M10x1,25
40	24	M38x1,5	30	12	49	50	9	G1/4"	45	18	25	M12x1,25
50	32	M45x1,5	33	16	57	60	11	G1/4"	53	21	25	M16x1,5
63	32	M45x1,5	33	16	70	60	12	G3/8"	66	21	27	M16x1,5

Ø (mm)	KU	KW	KX	KY	L	MM	PL	VD	WF	XC	Z1	ZC
32	10	8	17	6	13	12	9	2	34	117,5	69,5	151,5
40	13	10	19	6	15	16	12	3	39	139,6	84,6	177,6
50	17	10	24	8	16	20	12	3	44	147,2	86,2	195,2
63	17	10	24	8	16	20	13	3	45	156,2	94,2	204,2

Standard dimensions

Type: **...P**

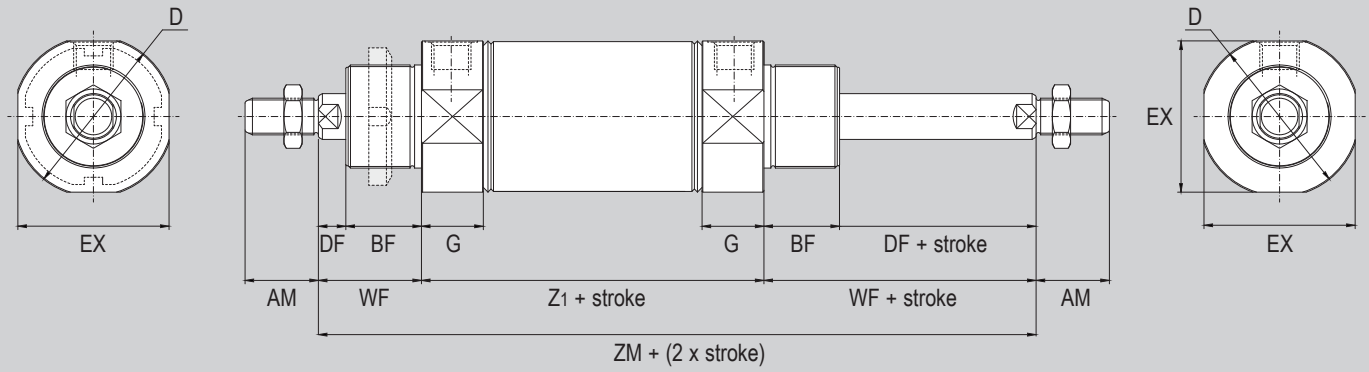

Type: **...T1**

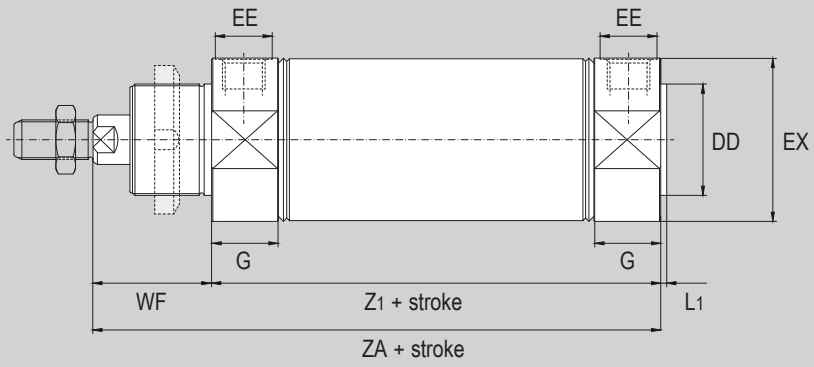

Type: **...T2**

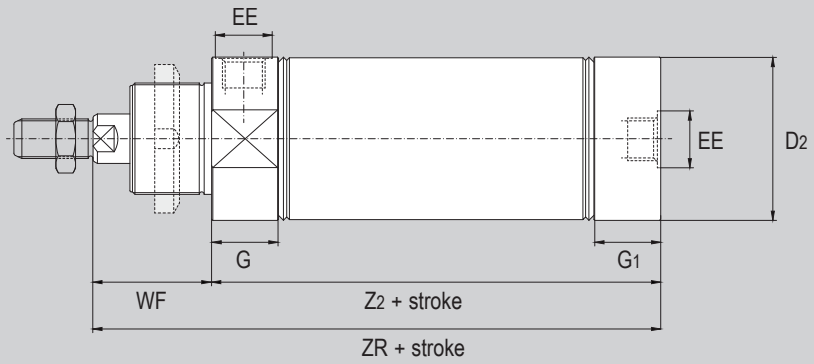

Ø (mm)	AM	G	G1	BF	WF	DF	ZA	ZM	ZR	Z1	Z2	L1	ØD	ØDD	ØD2	EX	EE
32	22	19	15	26	34	8	103,5	137,5	99,5	69,5	65,5	3	41	30	34	38	G1/8"
40	24	25	18	30	39	9	123,6	162,6	116,6	84,6	77,6	4	49	38	42	45	G1/4"
50	32	25	25	33	44	11	130,2	174,2	130,2	86,2	86,2	4	57	45	53	53	G1/4"
63	32	27	27	33	45	12	139,2	184,2	139,2	94,2	94,2	4	70	45	66	66	G3/8"

Main features

32 ÷ 63

Bores Ø

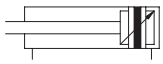

Double acting
Magnetic
With cushioning

MDMA

Type



Technical data

Bore Ø mm	32	40	50	63
Fluid	Filtered compressed air with or without lubrication. Lubrication, if started, must be continued.			
Pressure range	1 ÷ 10 bar			
Temperature range	-20°C ÷ +80°C (standard) -20°C ÷ +150°C (V) -40°C ÷ +80°C (BT)			
Strokes	25 ÷ 1000 mm			
Rod thread	M10x1,25	M12x1,25	M16x1,5	

Standard strokes

	MDMA Bore Ø mm			
Stroke mm	32	40	50	63
25				
50				
80				
100				
125				
160				
200				
250				
320				
400				
500				

Key
Standard stroke

Standard dimensions

Type: **MDMA**

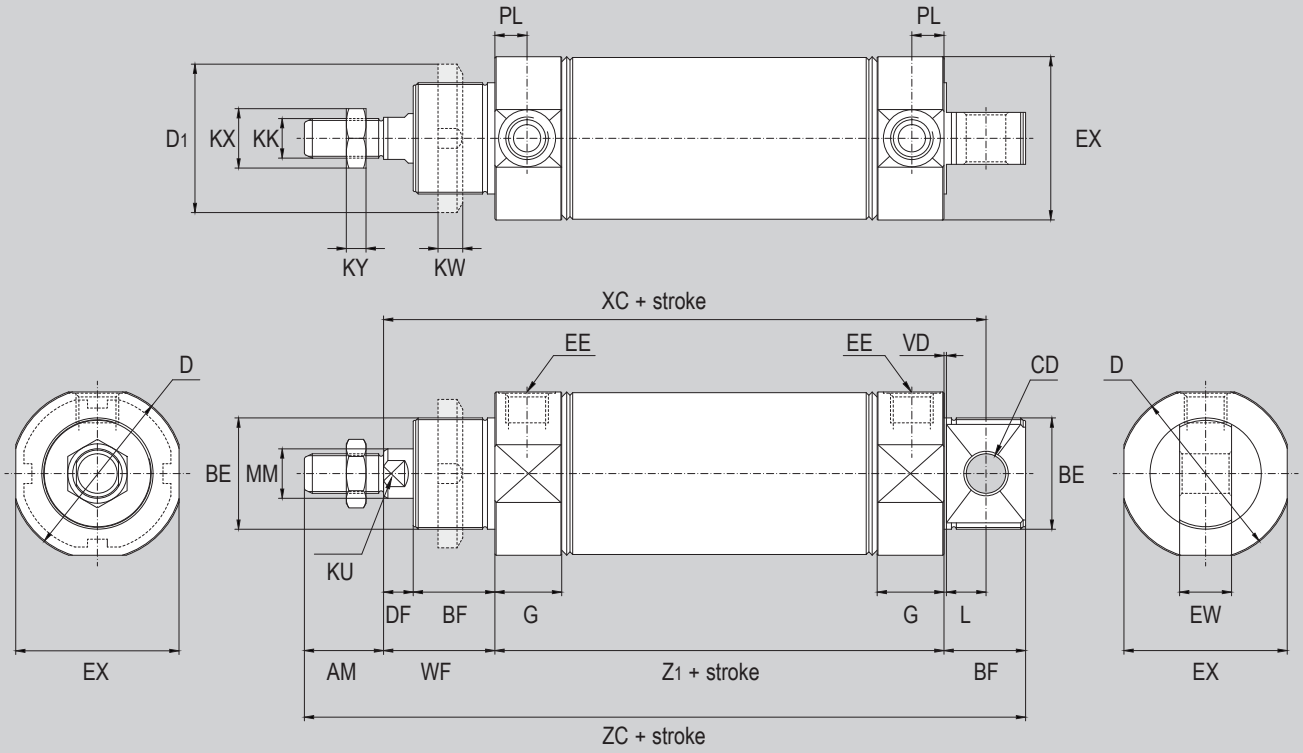

Ø (mm)	AM	BE	BF	CD	ØD	ØD1	DF	EE	EX	EW	G	KK
32	22	M30x1,5	26	10	41	42	8	G1/8"	38	16	19	M10x1,25
40	24	M38x1,5	30	12	49	50	9	G1/4"	45	18	25	M12x1,25
50	32	M45x1,5	33	16	57	60	11	G1/4"	53	21	25	M16x1,5
63	32	M45x1,5	33	16	70	60	12	G3/8"	66	21	27	M16x1,5

Ø (mm)	KU	KW	KX	KY	L	MM	PL	VD	WF	XC	Z1	ZC
32	10	8	17	6	13	12	9	2	34	117,5	69,5	151,5
40	13	10	19	6	15	16	12	3	39	139,6	84,6	177,6
50	17	10	24	8	16	20	12	3	44	147,2	86,2	195,2
63	17	10	24	8	16	20	13	3	45	156,2	94,2	204,2

Standard dimensions

Type: **...P**

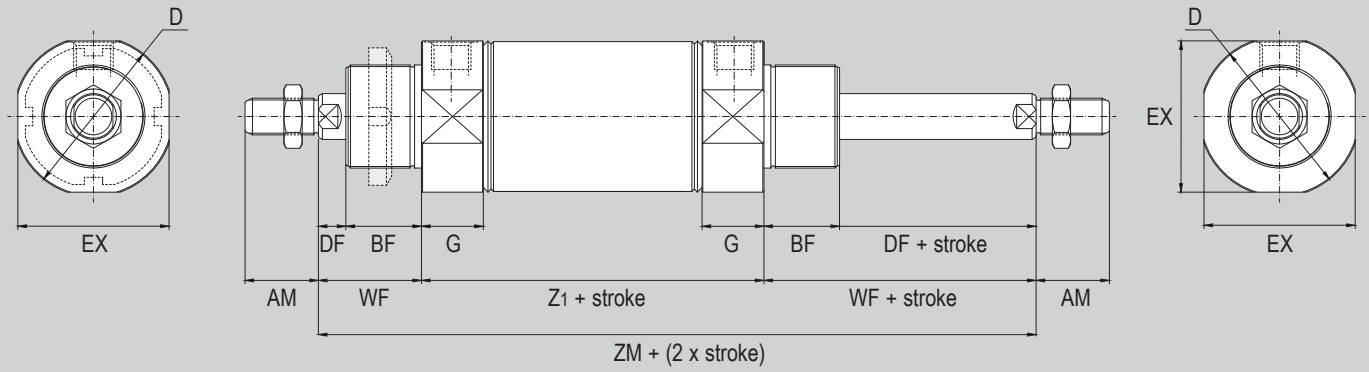

Type: **...T1**

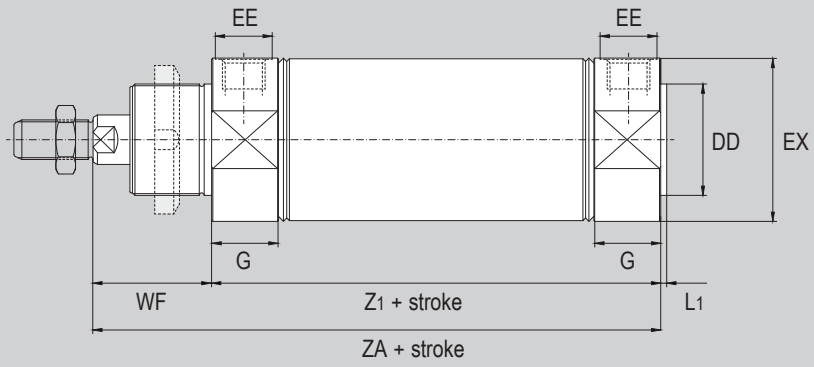

Ø (mm)	AM	G	BF	WF	DF	ZA	ZM	Z1	L1	ØD	ØDD	EX	EE
32	22	19	26	34	8	103,5	137,5	69,5	3	41	30	38	G1/8"
40	24	25	30	39	9	123,6	162,6	84,6	4	49	38	45	G1/4"
50	32	25	33	44	11	130,2	174,2	86,2	4	57	45	53	G1/4"
63	32	27	33	45	12	139,2	184,2	94,2	4	70	45	66	G3/8"

Female clevis with clip FF..ISO



For cylinder Ø mm	Code	Item	Compliance
32	041004	FF10ISO	ISO 8140
40	041005	FF12ISO	
50	041006	FF16ISO	
63			

Female clevis with pin and seeger FFP..ISO



For cylinder Ø mm	Code	Item	Compliance
32	041051	FFP10ISO	ISO 8140
40	041040	FFP12ISO	
50	041013	FFP16ISO	
63			

Female clevis (body only) FFN..ISO



For cylinder Ø mm	Code	Item	Compliance
32	041014	FFN10ISO	ISO 8140
40	041016	FFN12ISO	
50	041012	FFN16ISO	
63			

Bearing heads (DIN 648K) with female thread RF..SE



For cylinder Ø mm	Code	Item	Compliance
32	041554	RF10SE	ISO 8139
40	041555	RF12SE	
50	041557	RF16SE	
63			

Self-aligning articulated coupling GB..



For cylinder Ø mm	Code	Item	Compliance
32	041704	GB040	-
40	041706	GB060	
50	041708	GB0100	
63			

Rear clevis in steel with pin and seeger CF..M



For cylinder Ø mm	Code	Item	Compliance
32	040212	CF32M	ISO MP3
40	040213	CF40M	
50	040214	CF50-63M	
63			

Kit composed by rear clevis, pin and two seeger.

Foot-flange in steel P..AQM



For cylinder Ø mm	Code	Item	Compliance
32	040054	P032AQM	-
40	040055	P040AQM	
50	040056	P050AQM	
63	040057	P063AQM	

For mounting on cylinder require heads nut GH..AQM

Head nuts in steel GH..AQM



For cylinder Ø mm	Code	Item	Compliance
32	040066	GH032AQM	-
40	040067	GH040AQM	
50	040068	GH050/063AQM	
63			

Magnetic reed switch T groove ASV..



For cylinder Ø mm	Code	Item	Cylinder matching
32 ÷ 63	070946	ASV1C525	MSM* MDM* MDMA*
	071863	ASV1C550	
	071864	ASV1C51K	
	071189	ASV1C5M8	
	073639	ASV4D225	
	070246	ASV4D2M8	
	074900	ASV7N225	
	070247	ASV7N2M8	
	070372	ASV7M2M8	
	072920	ASV1H510	
	072918	ASV1H525	

*With bracket type AFR1063 for magnetic reed switches T groove

ATEX magnetic reed switch T groove MK..



For cylinder Ø mm	Code	Item	Compliance	Cylinder matching
32 ÷ 63	071120	MK500A	3D	MSM* MDM* MDMA*
	071108	MK502A	II1G	

*With bracket type AFR1063 for magnetic reed switches T groove

Bracket AFR.. for magnetic reed switches T groove



For cylinder Ø mm	Code	Item	Compliance
32 ÷ 63	072907	AFR1063	-

Notes

ROUND CYLINDERS
Series R



Find out our
key products

- **Solution for most applications**
- **Easy and intuitive choice**
- **Excellent value for money**
- **Wide availability**
- **Fast delivery**

Features and certifications

Series of round cylinders not conforming to standards, available in bores from Ø 32 to 63, single acting or double acting, magnetic or non magnetic, with or without cushioning. The heads joined to the barrel through rolling ensure perfect tightening.
Supplied as standard in compliance with Reach and RoHS directives, and SIL certificated. On request, they can be also supplied according to the 2014/34/EU ATEX Directive.

Type RS Ø 32 ÷ 63

from page 1.11.20



Round cylinders not conforming to standards, available in bores from Ø 32 to 63, single acting, non magnetic. Heads joined to the barrel through rolling ensure perfect tightening.
Supplied with rod nut and head nut.

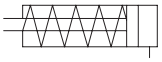

Type RD Ø 32 ÷ 63

from page 1.11.40



Round cylinders not conforming to standards, available in bores from Ø 32 to 63, double acting, non magnetic. Heads joined to the barrel through rolling ensure perfect tightening.
Supplied with rod nut and head nut.

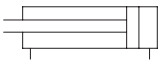

Type RDM Ø 32 ÷ 63

from page 1.11.40



Round cylinders not conforming to standards, available in bores from Ø 32 to 63, double acting, magnetic. Heads joined to the barrel through rolling ensure perfect tightening.
Supplied with rod nut and head nut. Possibility of applying one or more magnetic reed switches.

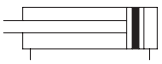

Type RDMA Ø 32 ÷ 63

from page 1.11.60



Round cylinders not conforming to standards, available in bores from Ø 32 to 63, double acting, magnetic, adjustable cushioning. Heads joined to the barrel through rolling ensure perfect tightening.
Supplied with rod nut and head nut. Possibility of applying one or more magnetic reed switches.

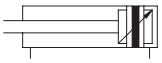

Options

Description		Symbol	Suffix
Through rod (not available for RS type)		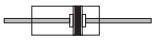	**P**
Rear spring (available only for RS type)			**T**
FKM seals	-20°C ÷ +150°C	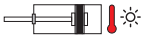	**V**
Low temperature seals	-40°C ÷ +80°C	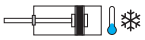	**BT**
Low friction		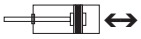	**L**
Special male thread (indicate the requested thread. E.g.: R-M 10x1,5; the dimension AM of the special thread will be the same as the standard; cylinder will be supplied without rod nut; for further information please contact the sales department)		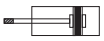	**R-M..**
ATEX versions on request			**/ATEX**
Special versions on request			**/S**

The options, when this is possible, can be combined with each other. For options matching see from page 1.11.4; For code key see from page 1.11.5

Options matching

Series	Bore	Model	Standard options matching						
			P	**T**	**V**	**BT**	**L**	**R-M..**(1)	**/ATEX**
RS	Ø 32 ÷ 63	Standard	-	●	●	●	●	●	●
		Rear spring (T)	-		●	●	●	●	●
		Low friction (L)	-	●	●	●		●	●
RD-RDM	Ø 32 ÷ 63	Standard	●	-	●	●	●	●	●
		Through rod (P)		-	●	●	●	●	●
		Low friction (L)	●	-	●	●		●	●
RDMA	Ø 32 ÷ 63	Standard	●	-	●	●	●	●	●
		Through rod (P)		-	●	●	●	●	●
		Low friction (L)	●	-	●	●		●	●

Key
● matching accessory; – not matching accessory

Options matching - notes

(1) Option **R-M..** require to indicate the desired thread. For further information please contact the sales department.

Standard materials

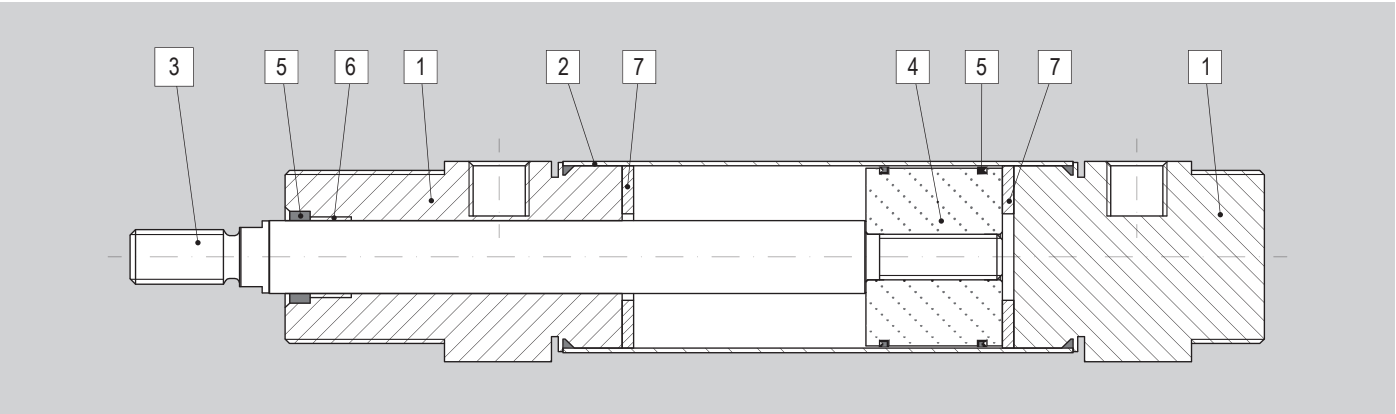

Position	Description	Materials
1	Heads	Anodised aluminium
2	Tube	Stainless Steel AISI 304
3	Rod	Stainless Steel AISI 303
4	Piston	Aluminium
5	Seals	NBR / Polyurethane (PU)
6	Bushing	Self-lubricating sintered bronze
7	Dumper	NBR

Code key

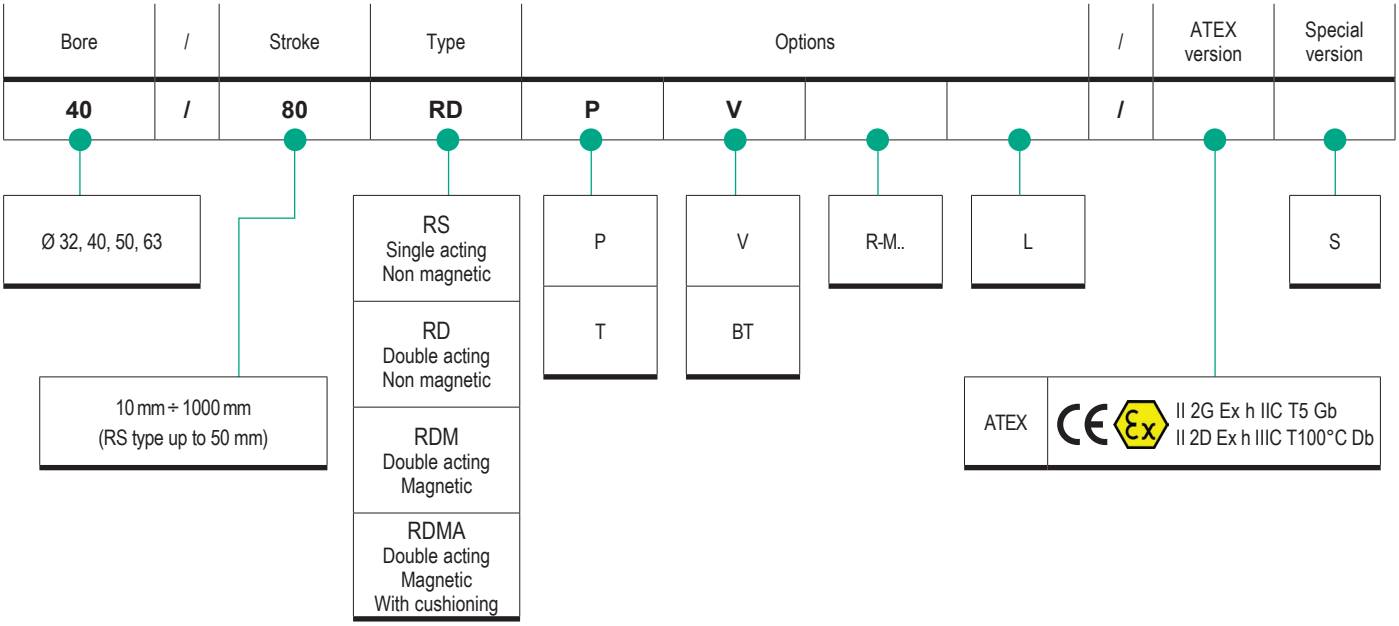

How to order

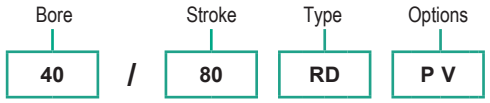

Notes

Options in the same grid are alternative to each others.

For further information on options and their matching, see page 1.11.3 and 1.11.4

For further information on the ATEX 2014/34/EU Directive, on classifications and protections, see from page III.1

Accessories

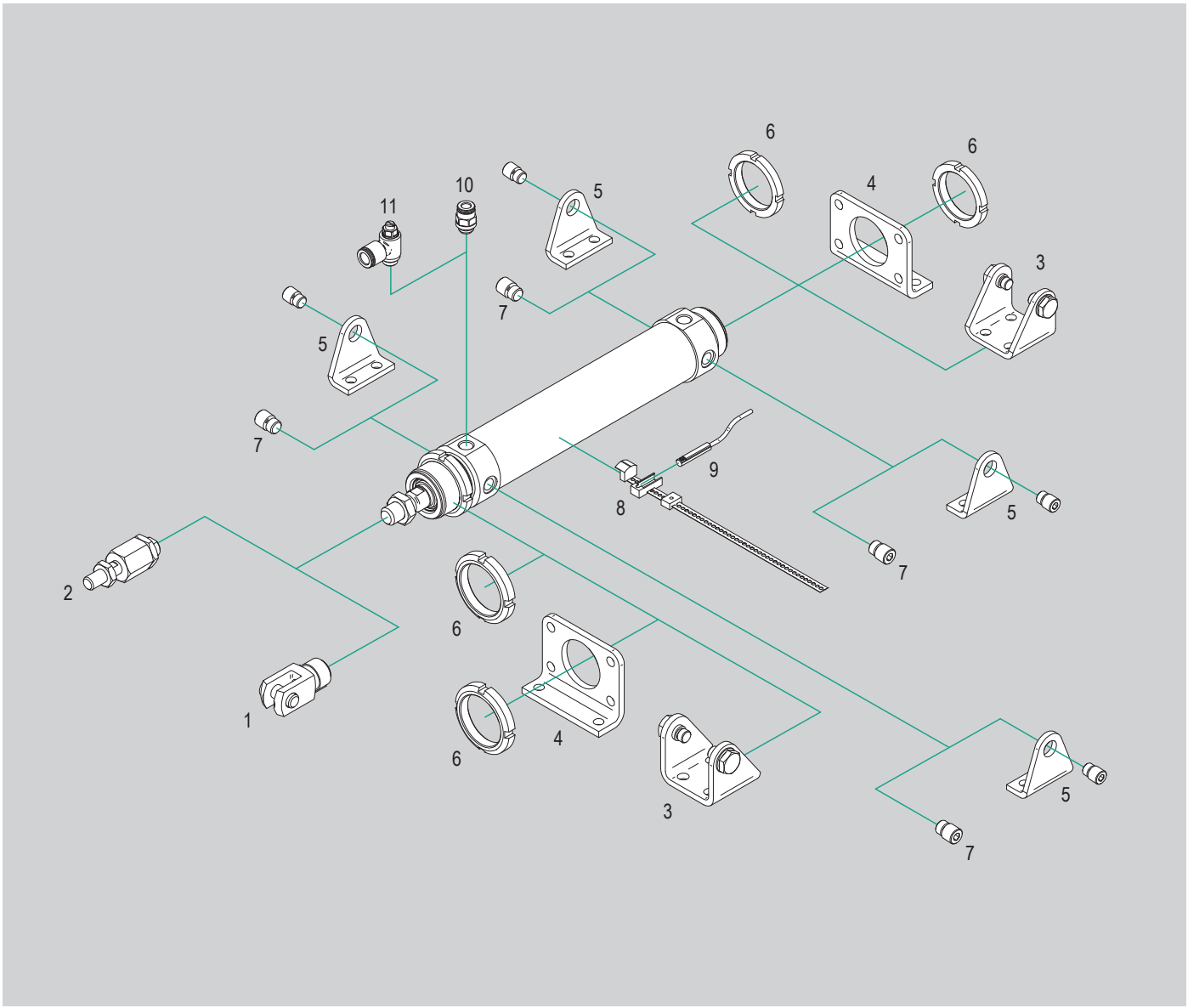

N.	Cylinder bore	Item	Description	Compliance	Matching				Code page	Data sheet page
					RS	RD	RDM	RDMA		
1	Ø 32 ÷ 63	FF..	DIN female clevis with clip	DIN 71752	●	●	●	●	1.11.90	1.86.1
		FFP..	DIN female clevis with pin and seeger		●	●	●	●		
		FFN..	DIN female clevis (body only)		●	●	●	●		1.86.2
2	Ø 32 ÷ 63	GB..	Bearing - Self-aligning articulated coupling	-	●	●	●	●		1.90.10
3	Ø 32 ÷ 63	CF..	Rear clevis		●	●	●	●		1.96.10
4	Ø 32 ÷ 63	P..	Foot-flange		●	●	●	●		
5	Ø 32 ÷ 63	CP..	Foot-hinge		●	●	●	●		1.96.11
6	Ø 32 ÷ 63	GH..	Heads nut		●	●	●	●		
7	Ø 32 ÷ 63	SEC..	Pins		●	●	●	●		1.96.12
8	Ø 32 ÷ 63	AFR..	Bracket for T type magnetic reed switches		-	-	●	●	1.11.91	1.120.1
9	Ø 32 ÷ 63	ASV..	Magnetic reed switch T groove		-	-	●	●		1.110.10
		MK..	ATEX magnetic reed switch T groove	2014/34/EU	-	-	●	●		1.113.1
10	Ø 32 ÷ 63	R..	Push-in fittings	-	●	●	●	●	4.2.1	
11	Ø 32 ÷ 63	V..C	Flow controls, for cylinders		●	●	●	●	4.94.1	

Key

● matching accessory; – not matching accessory

Main features

32 ÷ 63

Bores Ø

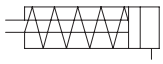

Single acting
Non magnetic

RS

Type



Technical data

Bore Ø mm		32			40			50			63		
Fluid		Filtered compressed air with or without lubrication. Lubrication, if started, must be continued.											
Pressure range		1 ÷ 10 bar											
Temperature range		-20°C ÷ +80°C (standard) -20°C ÷ +150°C (V) -40°C ÷ +80°C (BT)											
Strokes		10 ÷ 50 mm											
Rod thread		M10x1,5			M12x1,75			M16x2					
Thrust force at 6 bar (N)		482			754			1178			1869		
Traction force (N)	Stroke (mm)	10	25	50	10	25	50	10	25	50	10	25	50
	min.	57	51	40	98	86	64	147	130	101	147	130	101
	max.	62	62	62	105	105	105	158	158	158	158	158	158

Standard strokes

	RS Bore Ø mm			
Stroke mm	32	40	50	63
10				
25				
50				

Key
Standard stroke

Standard dimensions

Type: **RS**

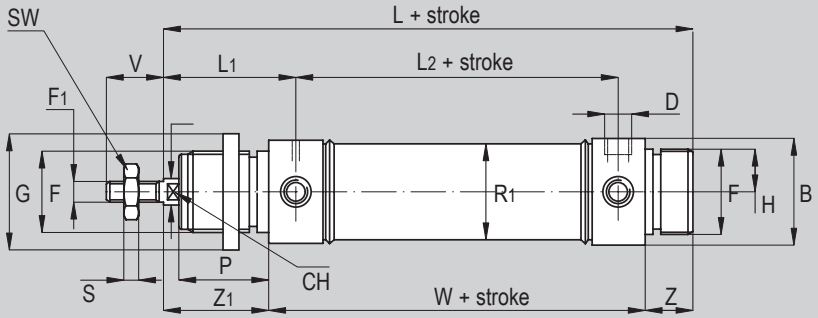

Ø (mm)	V	F	P	D	F_1	R	L_2	Z	Z_1	W	L_1	L	R_1	H	S	ØB	CH	SW	ØG
32	20	M30x1,5	30	1/8”	M10x1,5	12	78	14	38	96	47	148	33,6	17,5	6	38	10	17	45
40	24	M38x1,5	35	1/4”	M12x1,75	16	89	16	45	113	57	174	41,6	21	7	46	13	19	50
50	32	M45x1,5	38	1/4”	M16x2	20	96	18	50	120	62	188	52,4	26,5	8	57	17	24	58
63	32	M45x1,5	38	3/8”	M16x2	20	98	18	50	124	63	192	65,4	32,5	8	70	17	24	58

Main features

32 ÷ 63 — Bores Ø

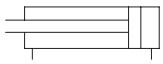

Double acting
Non magnetic

RD — Type

32 ÷ 63 — Bores Ø

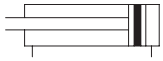

Double acting
Magnetic

RDM — Type



Technical data

Bore Ø mm	32	40	50	63
Fluid	Filtered compressed air with or without lubrication. Lubrication, if started, must be continued.			
Pressure range	1 ÷ 10 bar			
Temperature range	-20°C ÷ +80°C (standard)	-20°C ÷ +150°C (V)	-40°C ÷ +80°C (BT)	
Standard strokes	10 ÷ 1000 mm			
Rod thread	M10x1,5	M12x1,75	M16x2	

Standard strokes

	RD Bore Ø mm			
Stroke mm	32	40	50	63
10				
25				
50				
80				
100				
125				
160				
200				
250				
320				
400				
500				

	RDM Bore Ø mm			
Stroke mm	32	40	50	63
10				
25				
50				
80				
100				
125				
160				
200				
250				
320				
400				
500				

Key
Standard stroke

Standard dimensions

Type: **RD - RDM**

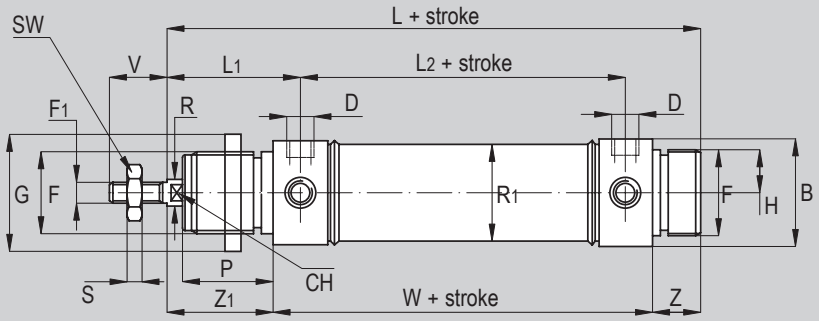

Ø (mm)	V	F	P	D	F_1	R	L_2	Z	Z_1	W	L_1	L	R_1	H	S	ØB	CH	SW	ØG
32	20	M30x1,5	30	G1/8”	M10x1,5	12	78	14	38	96	47	148	33,6	17,5	6	38	10	17	45
40	24	M38x1,5	35	G1/4”	M12x1,75	16	89	16	45	113	57	174	41,6	21	7	46	13	19	50
50	32	M45x1,5	38	G1/4”	M16x2	20	96	18	50	120	62	188	52,4	26,5	8	57	17	24	58
63	32	M45x1,5	38	G3/8”	M16x2	20	98	18	50	124	63	192	65,4	32,5	8	70	17	24	58

Dimensions with options

Type: **...P**

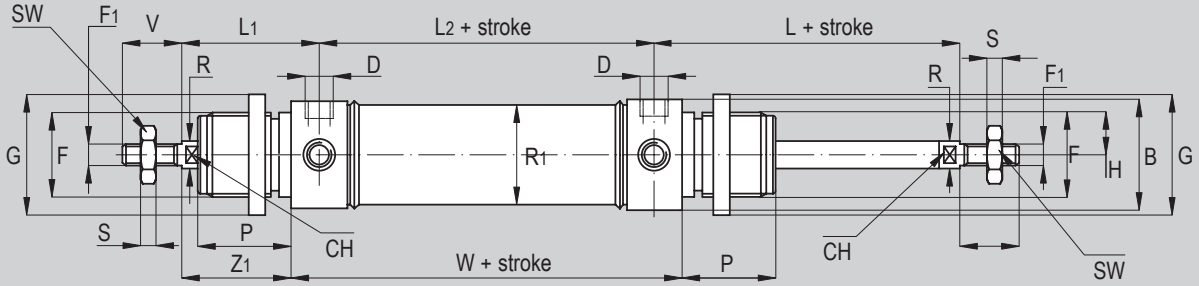

Ø (mm)	V	F	P	D	F_1	R	L_2	Z_1	W	L	L_1	R_1	H	S	ØB	CH	SW	ØG
32	20	M30x1,5	30	G1/8”	M10x1,5	12	78	38	96	47	47	33,6	17,5	6	38	10	17	45
40	24	M38x1,5	35	G1/4”	M12x1,75	16	89	45	113	57	57	41,6	21	7	46	13	19	50
50	32	M45x1,5	38	G1/4”	M16x2	20	96	50	120	62	62	52,4	26,5	8	57	17	24	58
63	32	M45x1,5	38	G3/8”	M16x2	20	98	50	124	63	63	65,4	32,5	8	70	17	24	58

Main features

32 ÷ 63

Bores Ø

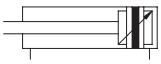

Double acting
Magnetic
With cushioning

RDMA

Type



Technical data

Bore Ø mm	32	40	50	63
Fluid	Filtered compressed air with or without lubrication. Lubrication, if started, must be continued.			
Pressure range	1 ÷ 10 bar			
Temperature range	-20°C ÷ +80°C (standard) -20°C ÷ +150°C (V) -40°C ÷ +80°C (BT)			
Strokes	25 ÷ 1000 mm			
Rod thread	M10x1,5	M12x1,75	M16x2	

Standard strokes

	RDMA Bore Ø mm			
Stroke mm	32	40	50	63
25				
50				
80				
100				
125				
160				
200				
250				
320				
400				
500				

Key
Standard stroke

Standard dimensions

Type: **RDMA**

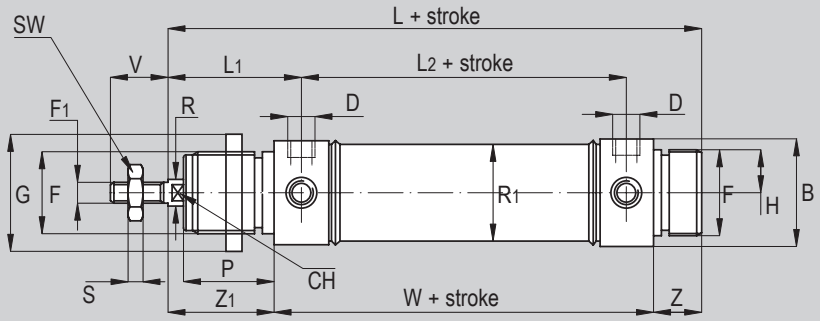

Ø (mm)	V	F	P	D	F_1	R	L_2	Z	Z_1	W	L_1	L	R_1	H	S	ØB	CH	SW
32	20	M30x1,5	30	G1/8"	M10x1,5	12	78	14	38	96	47	148	33,6	17,5	6	38	10	17
40	24	M38x1,5	35	G1/4"	M12x1,75	16	89	16	45	113	57	174	41,6	21	7	46	13	19
50	32	M45x1,5	38	G1/4"	M16x2	20	96	18	50	120	62	188	52,4	26,5	8	57	17	24
63	32	M45x1,5	38	G3/8"	M16x2	20	98	18	50	124	63	192	65,4	32,5	8	70	17	24

Dimensions with options

Type: **...P**

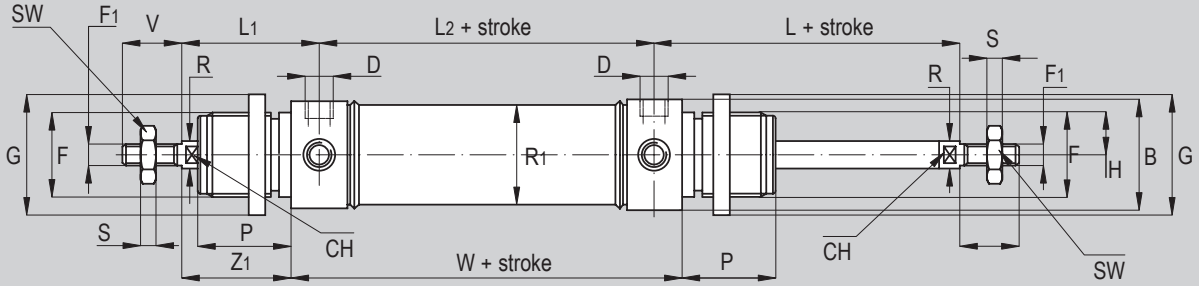

Ø (mm)	V	F	P	D	F_1	R	L_2	Z_1	W	L	L_1	R_1	H	S	ØB	CH	SW	ØG
32	20	M30x1,5	30	G1/8"	M10x1,5	12	78	38	96	47	47	33,6	17,5	6	38	10	17	45
40	24	M38x1,5	35	G1/4"	M12x1,75	16	89	45	113	57	57	41,6	21	7	46	13	19	50
50	32	M45x1,5	38	G1/4"	M16x2	20	96	50	120	62	62	52,4	26,5	8	57	17	24	58
63	32	M45x1,5	38	G3/8"	M16x2	20	98	50	124	63	63	65,4	32,5	8	70	17	24	58

Female clevis with clip FF..DIN



For cylinder Ø mm	Code	Item	Compliance
32	041025	FF10DIN	DIN 71752
40	041026	FF12DIN	
50	041028	FF16DIN	UNI 1676
63			

Female clevis with pin and seeger FFP..DIN



For cylinder Ø mm	Code	Item	Compliance
32	041096	FFP10DIN	DIN 71752
40	041217	FFP12DIN	
50	041213	FFP16DIN	UNI 1676
63			

Female clevis (body only) FFN..DIN



For cylinder Ø mm	Code	Item	Compliance
32	041020	FFN10DIN	DIN 71752
40	041203	FFN12DIN	
50	041202	FFN16DIN	UNI 1676
63			

Self-aligning articulated coupling GB..



For cylinder Ø mm	Code	Item	Compliance
32	041705	GB050	-
40	041707	GB090	

Rear clevis in steel with pins CF..AQM+P



For cylinder Ø mm	Code	Item	Compliance
32	040058	CF032AQM+P	-
40	040059	CF040AQM+P	
50	040060	CF050AQM+P	
63	040061	CF063AQM+P	

Kit composed by one clevis and two pins.

Foot-flange in steel P..AQM



For cylinder Ø mm	Code	Item	Compliance
32	040054	P032AQM	-
40	040055	P040AQM	
50	040056	P050AQM	
63	040057	P063AQM	

For mounting on cylinder require heads nut GH..AQM, see below.

Foot-hinge in steel with pin CP..AQM+P



For cylinder Ø mm	Code	Item	Compliance
32	040170	CP032AQM+P	-
40	040171	CP040AQM+P	
50	040172	CP050AQM+P	
63	040173	CP063AQM+P	

Kit composed by two foot-hinge supplied with pins.

Pin in steel SEC..AQM



For cylinder Ø mm	Code	Item	Compliance
32	040062	SEC032AQM	-
40	040063	SEC040AQM	
50	040064	SEC050AQM	
63	040065	SEC063AQM	

Kit composed by two pins.

Head nuts in steel GH..AQM



For cylinder Ø mm	Code	Item	Compliance
32	040066	GH032AQM	-
40	040067	GH040AQM	
50-63	040068	GH050/063AQM	

Magnetic reed switch T groove ASV..



For cylinder Ø mm	Code	Item	Cylinder matching
32 ÷ 63	070946	ASV1C525	RDM* RDMA*
	071863	ASV1C550	
	071864	ASV1C51K	
	071189	ASV1C5M8	
	073639	ASV4D225	
	070246	ASV4D2M8	
	074900	ASV7N225	
	070247	ASV7N2M8	
	070372	ASV7M2M8	
	072918	ASV1H525	

*With bracket type AFR1063 for magnetic reed switches T groove

ATEX magnetic reed switch T groove MK..



For cylinder Ø mm	Code	Item	Compliance	Cylinder matching
32 ÷ 63	071120	MK500A	3D	RDM* RDMA*
	071108	MK502A	II1G	

*With bracket type AFR1063 for magnetic reed switches T groove

Bracket AFR.. for magnetic reed switches T groove



For cylinder Ø mm	Code	Item	Compliance
32 ÷ 63	072907	AFR1063	-

CNOMO
Cylinders



Find out our
key products

- **Solution for most applications**
- **Easy and intuitive choice**
- **Excellent value for money**
- **Wide availability**
- **Fast delivery**

Features and certifications

Series of cylinders conforming to CNOMO standards. With round barrel and tie rods, available in bores from Ø 25 to 200, double acting, with adjustable cushionings at both ends, magnetic or non magnetic.
Supplied as standard in compliance with Reach and RoHS directives, and SIL certificated. On request, they can be also supplied according to the 2014/34/EU ATEX Directive.

Type CX Ø 32 ÷ 100

from page 1.14.20



Cylinders CNOMO, available in bores from Ø 32 to 100, double acting, with adjustable cushionings at both ends, non magnetic. Supplied with rod nut.

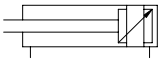

Type CM Ø 25 ÷ 200

from page 1.14.40



Cylinders CNOMO, available in bores from Ø 32 to 200, double acting, with adjustable cushionings at both ends, magnetic. Supplied with rod nut.

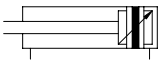

Options

Description	Symbol	Suffix
Through rod		**P**
Stainless Steel AISI 304 rod	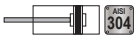	**K**
Stainless Steel AISI 316 rod	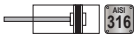	**K316**
Stainless Steel tie-rods, nuts and grower	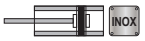	**K1**
FKM seals -20°C ÷ +150°C	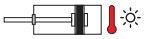	**V**
FKM rod seal -20°C ÷ +80°C	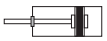	**V1**
Tandem forward movement piston rods coupled together		**TA1**
Tandem forward movement piston rods independent	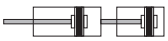	**TA2**
Tandem back to back	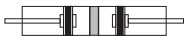	**TA3**
Tandem front to front	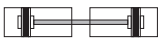	**TA4**
Special length of front tie rod (indicate the requested length in mm, E.g.: T1=25. For further information, please contact the sales department.	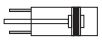	**T1**
Special length of rear tie rod (indicate the requested length in mm, E.g.: T2=25. For further information, please contact the sales department)	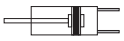	**T2**
Without adjustable cushionings	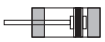	**D**
Adjustable rear cushioning only	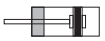	**D1**
Adjustable front cushioning only	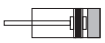	**D2**
Special male thread (indicate the requested thread. E.g.: R-M10x1,5; the dimension F of the special thread will be the same as the standard; cylinder will be supplied without rod nut; for further information please contact the sales department)	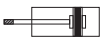	**R-M..**
Stainless Steel AISI 316L tube		**TX**
ATEX versions on request (only with options K or K316; for further information please contact the sales department)		**/ATEX**
Special versions on request		**/S**

The options, when this is possible, can be combined with each other. For options matching see from page 1.14.4; For code key see from page 1.14.5

Options matching

Series	Bore	Model	Standard options matching												
			K	**K316**	**K1**	**P**	**V**	**V1**	**TA..**	**T..**(1)	**D**	**D1**	**D2**	**R-M..**(2)	**TX**	**/ATEX**(4)
CX	Ø 32 ÷ 100	Standard	●	●	●	●	●	●	●	●	●	●	●	●	●	●
		Through rod (P)		-	●	●	●	●	●	●	●	●	●	●	●	●
		Stainless Steel rod (K)	●	●	●		●	●	-	●	●	●	●	●(3)	●	●
CM	Ø 25 ÷ 200	Standard	●	●	●	●	●	●	●	●	●	●	●	●	●	●
		Through rod (P)		-	●	●	●	●	●	●	●	●	●	●	●	●
		Stainless Steel rod (K)	●	●	●		●	●	-	●	●	●	●	●(3)	●	●

Key
● allowed matching; **-** not allowed matching

Options matching - notes

(1) Options **T1** or **T2** require to indicate the desired dimension in mm (E.G. "T1=25"). For further information please contact the sales department.

(2) Option **R-M..** require to indicate the desired thread, i.e. "R-M10x1,5". For further information please contact the sales department.

(3) With through rod option (**P**) the option special male thread (**R-M..**) is applied on both sides of the rod.

(4) In the **/ATEX** versions, is required to mount the stainless steel rod (options **K** or **K316**).

Standard materials

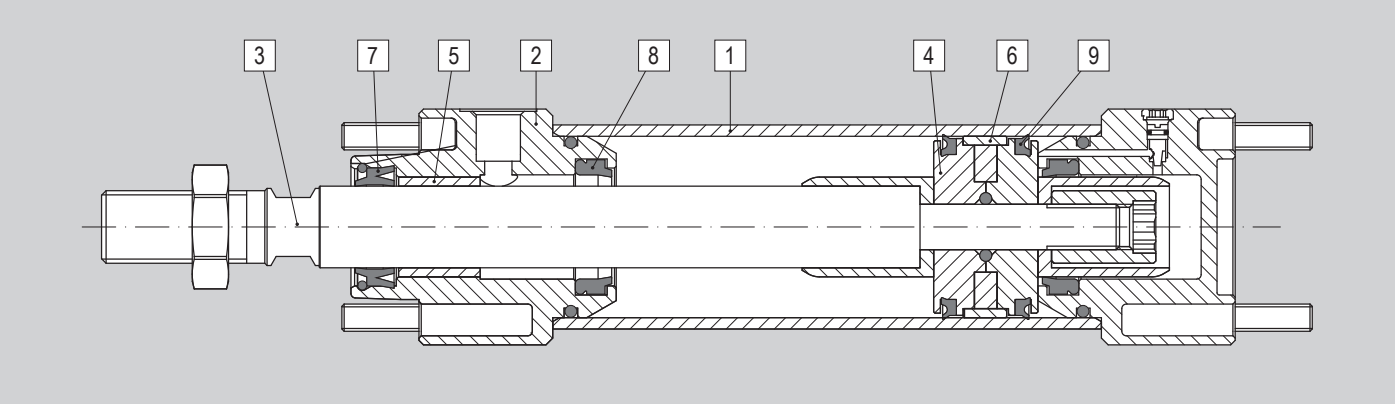

Position	Description	Materials	
		CX..	CM..
1	Tube	Anodised aluminium	
2	Heads	Die-cast aluminium powder coated	
3	Rod	Chrome-plated C45 steel	
4	Piston	Monobloc	Aluminium
5	Bushing	Self-lubricating sintered bronze	
6	Guide ring	-	Acetalic resin (POM)
7	Rod seal	NBR with metal core	
8	Cushioning seal	Polyurethane (PU)	
9	Piston seal	Polyurethane (PU)	
-	Other seals	NBR	

Code key

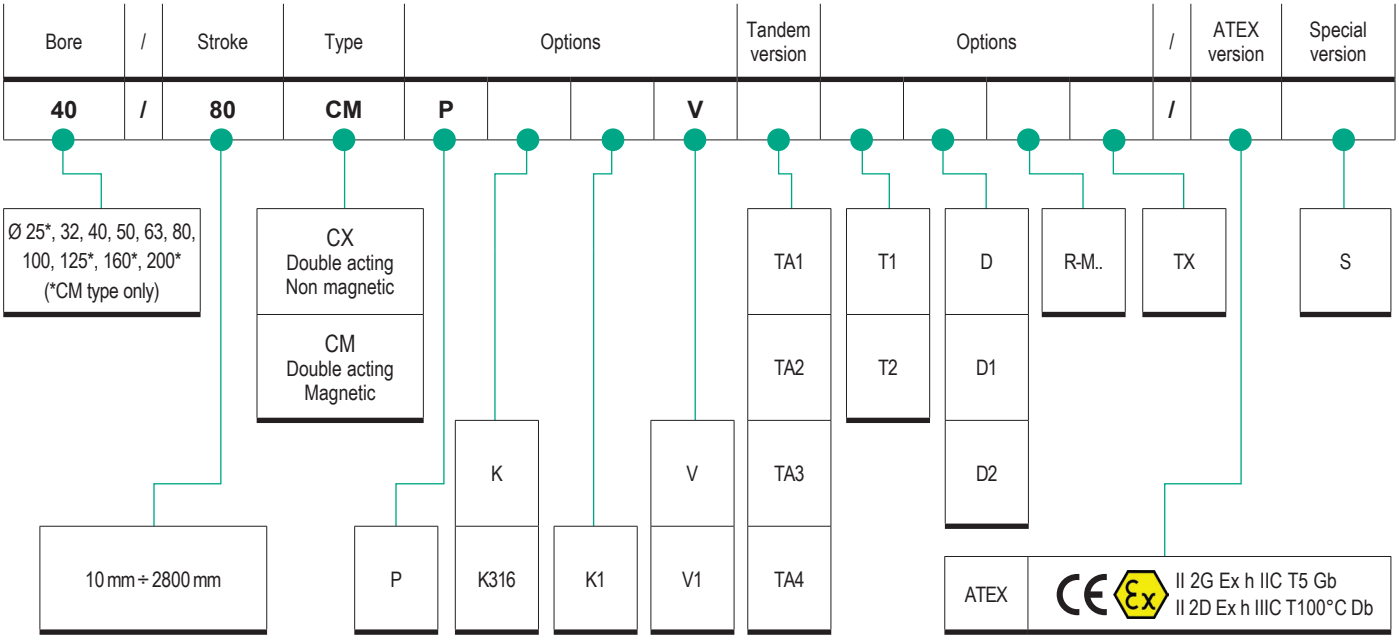

How to order

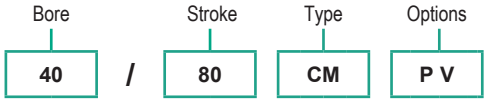

Notes

Options in the same grid are alternative to each others.

For further information on options and their matching, see page 1.14.3 and page 1.14.4

For further information on the ATEX 2014/34/EU Directive, on classifications and protections, see from page III.1

Standard** seal kit for CM type

Number of components	Description
n. 1	Rod seal
n. 2	Cushioning seal
n. 2	Piston seal
n. 2	Tube-head o-ring
n. 1	Seeger ring
n. 1	Piston guiding ring
n. 1	Semipiston o-ring
n. 2	Cushioning screw o-ring

Standard seal kit code key

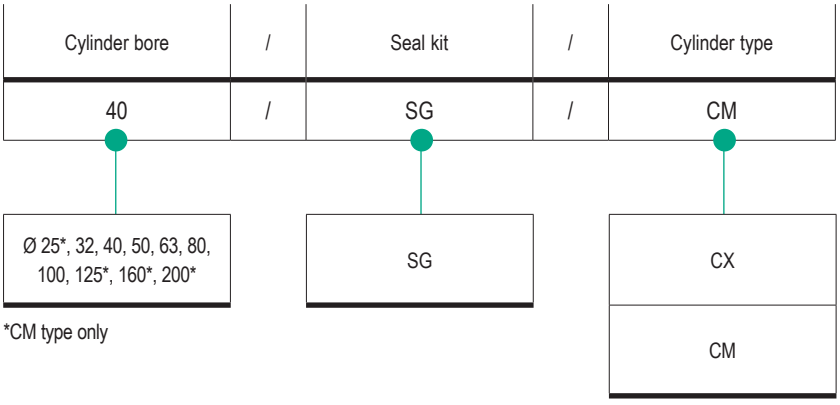

*CM type only

Standard** seal kit for CX type

Number of components	Description
n. 1	Rod seal
n. 2	Cushioning seal
n. 1	Piston monobloc
n. 1	Seeger ring
n. 2	Tube-head o-ring
n. 2	Cushioning screw o-ring

**For cylinders with options P, V or V1, the kit include further components.

Accessories

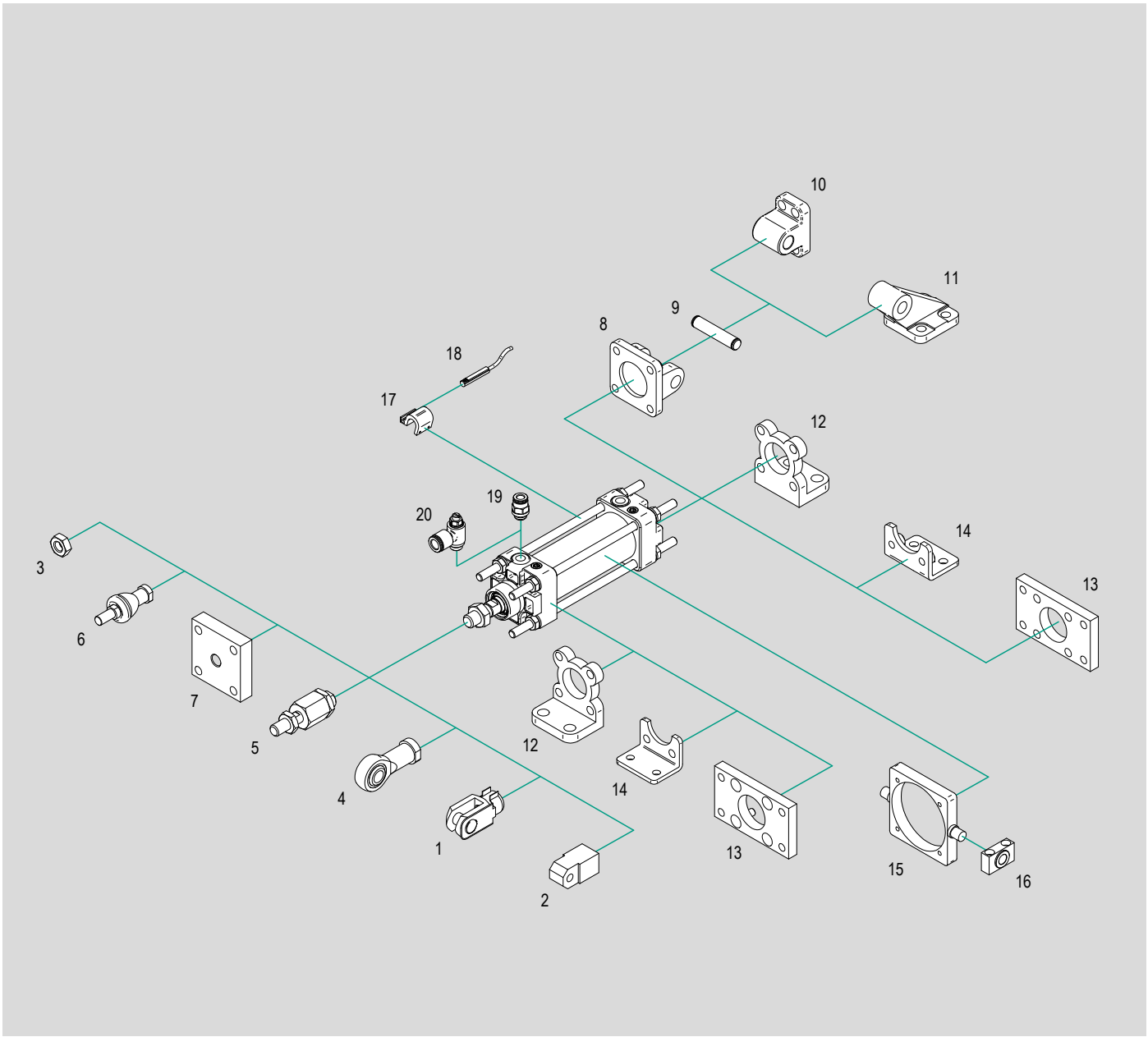

N.	Cylinder bore	Item	Description	Compliance	Matching		Code page	Data sheet page
					CX	CM		
1	Ø 25 ÷ 125	FF..CN	CNOMO female clevis with clip	-	●	●	1.14.90	1.87.1
	Ø 25 ÷ 200	FFP..CN	CNOMO female clevis with pin and seeger		●	●		
		FFN..CN	CNOMO female clevis (body only)		●	●		
2	Ø 25 ÷ 200	FM..CN	CNOMO male clevis with pin and seeger		●	●		1.87.2
		FMN..CN	CNOMO male clevis (body only)		●	●		
3	Ø 25 ÷ 200	D..	Rod nut	UNI 5589	●	●		1.90.70
4	Ø 25 ÷ 200	RF..SE	Bearing head (DIN 648K) with female thread	ISO 8139	●	●		1.90.1
5	Ø 25 ÷ 200	GB..	Bearing - Self-aligning articulated coupling	-	●	●		1.90.10
6	Ø 25 ÷ 100	RBI..	Bearing - Axial articulated coupling	ISO	●	●		1.90.20
	Ø 40 ÷ 125	RBL..	Bearing - Angular articulated coupling		●	●		1.90.30
7	Ø 50 ÷ 200	GC..	Self-aligning coupling		●	●		1.90.40
8	Ø 32 ÷ 200	CF..ALCN	Rear clevis	CNOMO	●	●	1.14.91	1.99.1
9	Ø 32 ÷ 200	SEC..AQCN	Pin for rear clevis		●	●	1.14.92	1.99.51
10	Ø 32 ÷ 200	AN..ALCN	Rear standard hinge		●	●	1.14.90	1.99.1
11	Ø 32 ÷ 200	AS..ALCN	Rear 90° hinge		●	●	1.14.91	1.99.2
12	Ø 25 ÷ 200	P..ALCN	High foot		●	●		
13	Ø 32 ÷ 200	FL..AQCN	Counterbored flange		●	●		1.99.50
		FLF..AQCN	Threaded flange		●	●		
14	Ø 32 ÷ 200	PB..AQCN	Low foot		●	●		1.99.51
15	Ø 32 ÷ 200	CT..AQCN	Adjustable center trunnion		●	●	1.14.92	1.99.52
		CTN..AQCN	Non adjustable center trunnion		●	●		
16	Ø 32 ÷ 200	ST..AQIS	Support for center trunnion	ISO AT4	●	●		1.99.53
17	Ø 25 ÷ 200	AS..	Bracket for T type magnetic reed switches	-	–	●	1.14.91	1.120.3
			Bracket for hi-temp. magnetic reed switches		–	●		1.120.4
18	Ø 25 ÷ 200	ASV..	Magnetic reed switch T groove		–	●	1.14.92	1.110.10
		MK..	ATEX magnetic reed switch T groove	2014/34/EU	–	●		1.113.1
		ASH..	Hi-temperatures magnetic reed switch	-	–	●		1.111.1
19	Ø 25 ÷ 200	R..	Push-in fittings		●	●	4.2.1	
20	Ø 25 ÷ 200	V..C	Flow controls, for cylinders		●	●	4.94.1	

Key
● matching accessory; – not matching accessory

Main features

32 ÷ 100
Bores Ø

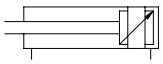
Double acting
Non magnetic
With cushioning

CX
Type



Technical data

Bore Ø mm		32	40	50	63	80	100
Fluid		Filtered compressed air with or without lubrication. Lubrication, if started, must be continued.					
Pressure range		1 ÷ 10 bar					
Temperature range		-20°C ÷ +80°C (standard / V1) -20°C ÷ +150°C (V)					
Strokes		10 ÷ 2800 mm					
Cushion length		21	28	28	34	34	38
Port		1/8"	1/4"		3/8"		1/2"
Rod thread		M10x1,5	M16x1,5		M20x1,5		M27x2
Weight (g.)	Stroke zero	453	842	1231	1962	2867	4772
	Additional 10 mm	24	35	50	60	76	107

Standard strokes

Stroke mm	**CX** Bore Ø mm 32	40	50	63	80	100
10						
25						
50						
80						
100						
125						
150						
160						
200						
250						
300						
320						
400						
450						
500						

Key
Standard stroke

Standard dimensions

Type: **CX**

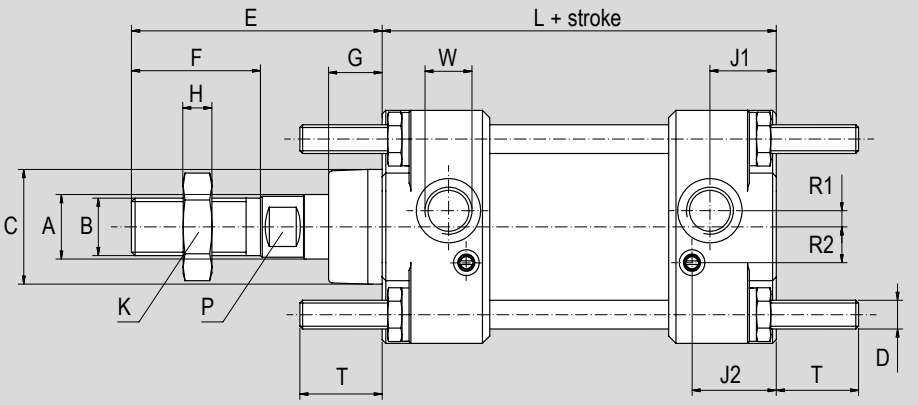

Ø (mm)	ØA f7	B	ØC e9	E	F	G	L ±1	P	K	H	D	T*	W	M	N	J1	J2	R1	R2
32	12	M10x1.5	25	45	20	15	80	8	17	6	M6	17	1/8"	45	33	15	16.5	6	8
40	18	M16x1.5	32	70	36	15	110	13	24	8	M6	17	1/4"	52	40	17.5	23	3	11
50	18	M16x1.5	32	70	36	15	110	13	24	8	M8	23	1/4"	65	49	18.5	23.5	4.5	10
63	22	M20x1.5	45	85	46	20	125	17	30	9	M8	23	3/8"	75	59	19	23	4.5	14
80	22	M20x1.5	45	85	46	20	125	17	30	9	M10	28	3/8"	95	75	22	25	8	13
100	30	M27x2	55	110	63	20	145	22	41	12	M10	28	1/2"	115	90	26	31	12	10

*In case of combination with center trunnion (CT..AQCN or CTN..AQCN, see page 1.14.92), T dimension is equal 0 in every bore; In case of combination with threaded flange (FLF..AQCN, see page 1.14.91), T dimension of tie-rods is 1 mm lower of the flange thickness (AS dimension, see page 1.99.50), while on the opposite side, T dimension is equal 0. These accessories necessarily have to be ordered with the cylinder.

Dimensions with options

Type: **...P**

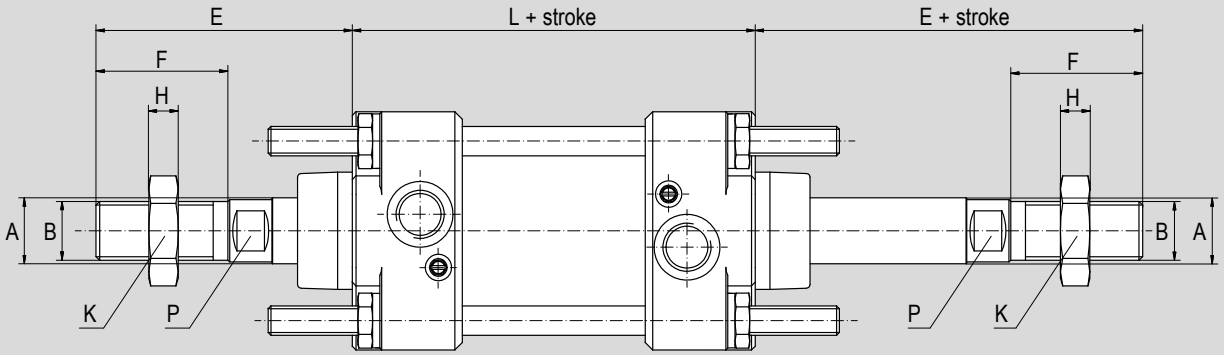

Ø (mm)	ØA f7	B	E	F	L ±1	P	K	H
32	12	M10x1.5	45	20	90	8	17	6
40	18	M16x1.5	70	36	129	13	24	8
50	18	M16x1.5	70	36	129	13	24	8
63	22	M20x1.5	85	46	143	17	30	9
80	22	M20x1.5	85	46	143	17	30	9
100	30	M27x2	110	63	164	22	41	12

Dimensions tandem versions

Type: **...TA1**

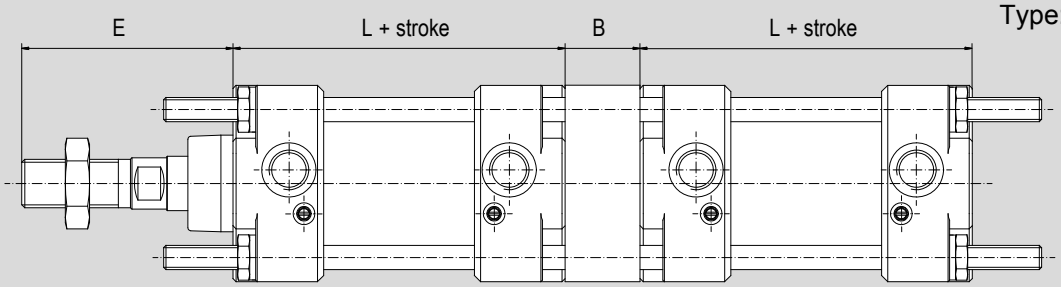

Type: **...TA2**

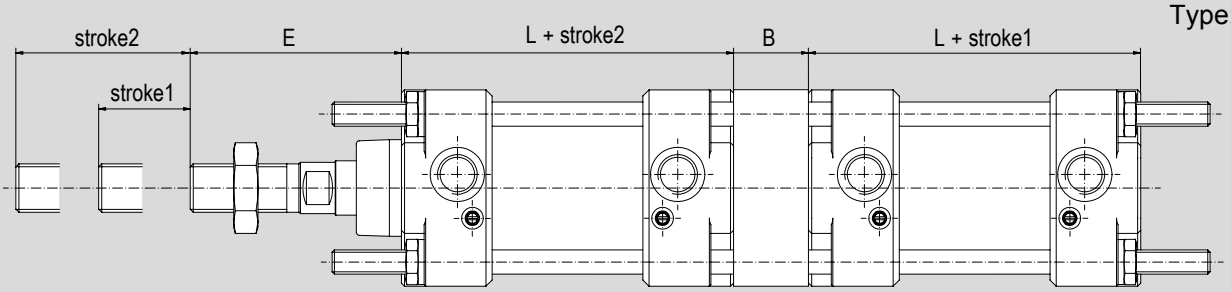

Type: **...TA3**

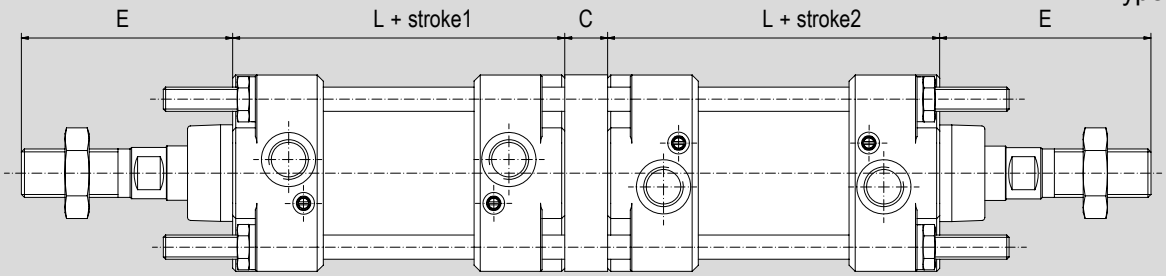

Type: **...TA4**

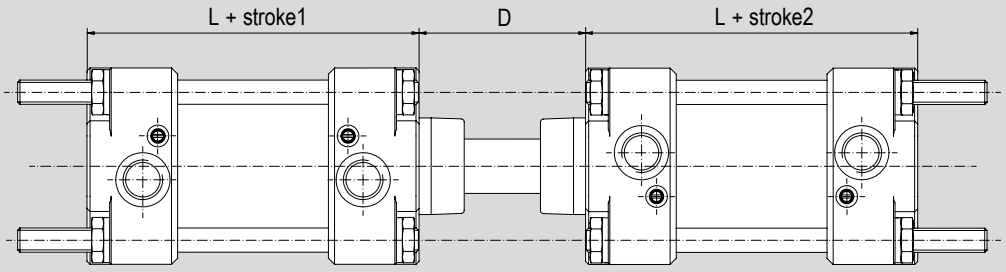

Ø mm	E	L	B	C	D
32	45	80	30	5	38
40	70	110	30	8	40
50	70	110	30	8	47
63	85	125	40	10	59
80	85	125	40	10	62
100	110	145	40	15	55

Main features

25 ÷ 200
Bores Ø

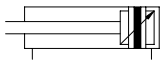

Double acting
Magnetic
With cushioning

CM
Type



Technical data

Bore Ø mm		25	32	40	50	63	80	100	125	160	200
Fluid		Filtered compressed air with or without lubrication. Lubrication, if started, must be continued.									
Pressure range		1 ÷ 10 bar									
Temperature range		-20°C ÷ +80°C (standard / V1) -20°C ÷ +150°C (V)									
Strokes		10 ÷ 2800 mm									
Cushion length		21		28		34		38	27	40	
Port		1/8"		1/4"		3/8"		1/2"		3/4"	
Rod thread		M10x1,5		M16x1,5		M20x1,5		M27x2		M36x2	
Weight (g.)	Stroke zero	377	453	842	1231	1962	2867	4772	6146	12846	16175
	Additional 10 mm	22	24	35	50	60	76	107	135	232	249

Standard strokes

	CM Bore Ø mm									
Stroke mm	25	32	40	50	63	80	100	125	160	200
10										
25										
50										
80										
100										
125										
150										
160										
200										
250										
300										
320										
400										
450										
500										

Key
Standard stroke

Standard dimensions

Type: **CM**

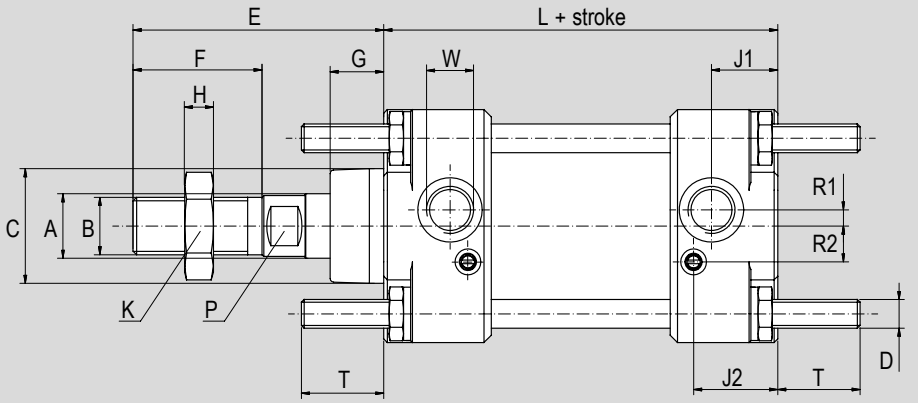

Ø (mm)	ØA f7	B	ØC e9	E	F	G	L ±1	P	K	H	D	T*	W	M	N	J1	J2	R1	R2
25	12	M10x1.5	25	45	20	15	80	8	17	6	M6	17	1/8"	40	28	7	11	0.75	7.5
32	12	M10x1.5	25	45	20	15	80	8	17	6	M6	17	1/8"	45	33	15	16.5	6	8
40	18	M16x1.5	32	70	36	15	110	13	24	8	M6	17	1/4"	52	40	17.5	23	3	11
50	18	M16x1.5	32	70	36	15	110	13	24	8	M8	23	1/4"	65	49	18.5	23.5	4.5	10
63	22	M20x1.5	45	85	46	20	125	17	30	9	M8	23	3/8"	75	59	19	23	4.5	14
80	22	M20x1.5	45	85	46	20	125	17	30	9	M10	28	3/8"	95	75	22	25	8	13
100	30	M27x2	55	110	63	20	145	22	41	12	M10	28	1/2"	115	90	26	31	12	10
125	30	M27x2	55	110	63	20	145	22	41	12	M12	34	1/2"	140	110	-	-	-	-
160	40	M36x2	65	135	85	25	180	32	54	14	M16	42	3/4"	180	140	-	-	-	-
200	40	M36x2	65	135	85	25	180	32	54	14	M16	42	3/4"	220	175	-	-	-	-

*In case of combination with center trunnion (CT..AQCN or CTN..AQCN, see page 1.14.92), T dimension is equal 0 in every bore; In case of combination with threaded flange (FLF..AQCN, see page 1.14.91), T dimension of tie-rods is 1 mm lower of the flange thickness (AS dimension, see page 1.99.50), while on the opposite side, T dimension is equal 0. These accessories necessarily have to be ordered with the cylinder.

Dimensions with options

Type: **...P**

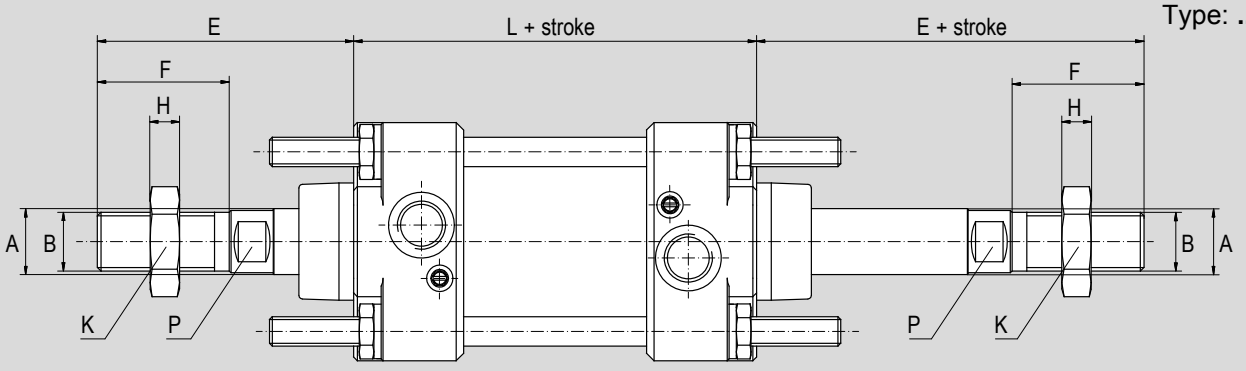

Ø (mm)	ØA f7	B	E	F	L ±1	P	K	H
25	12	M10x1.5	45	20	90	8	17	6
32	12	M10x1.5	45	20	90	8	17	6
40	18	M16x1.5	70	36	129	13	24	8
50	18	M16x1.5	70	36	129	13	24	8
63	22	M20x1.5	85	46	143	17	30	9
80	22	M20x1.5	85	46	143	17	30	9
100	30	M27x2	110	63	164	22	41	12
125	30	M27x2	110	63	164	22	41	12
160	40	M36x2	135	85	200	32	54	14
200	40	M36x2	135	85	200	32	54	14

Dimensions tandem versions

Type: **...TA1**

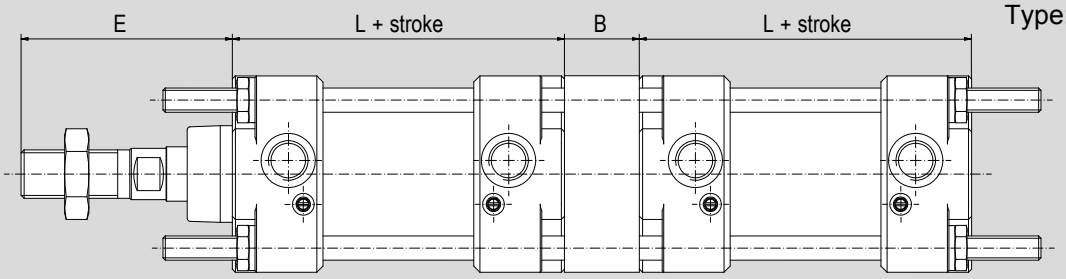

Type: **...TA2**

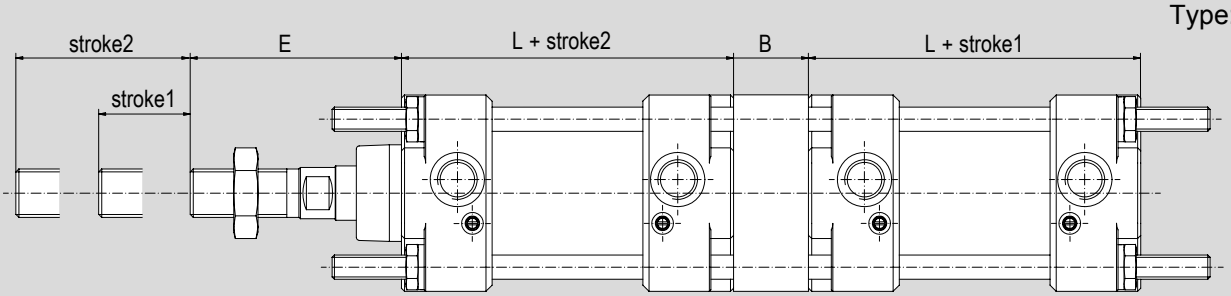

Type: **...TA3**

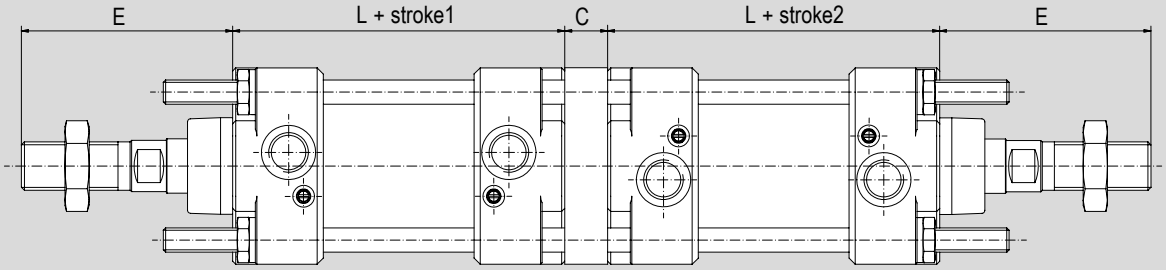

Type: **...TA4**

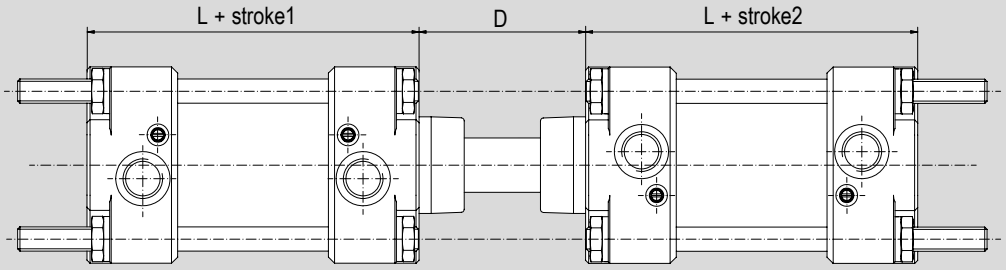

Ø mm	E	L	B	C	D
25	45	80	30	5	36
32	45	80	30	5	38
40	70	110	30	8	40
50	70	110	30	8	47
63	85	125	40	10	59
80	85	125	40	10	62
100	110	145	40	15	55
125	110	145	40	15	80
160	135	180	50	20	102
200	135	180	50	20	87

Female clevis with clip FF..CN



For cylinder Ø mm	Code	Item	Compliance
25-32	041081	FF10CN	-
40-50	041082	FF16CN	
63-80	041084	FF20CN	
100-125	041086	FF27CN	
160-200	-	-	

Female clevis with pin and seeger FFP..CN



For cylinder Ø mm	Code	Item	Compliance
25-32	041106	FFP10CN	-
40-50	041105	FFP16CN	
63-80	041097	FFP20CN	
100-125	041087	FFP27CN	
160-200	041088	FFP36CN	

On request available the clevis FFN..CN (body only) in Ø 25 ÷ 200

Male clevis with pin and seeger FM..CN



For cylinder Ø mm	Code	Item	Compliance
25-32	041041	FM10CN	-
40-50	041042	FM16CN	
63-80	041044	FM16CN	
100-125	041046	FM27CN	
160-200	041048	FM36CN	

On request available the clevis FMN..CN (body only) in Ø 25 ÷ 200

Rod nut D..



For cylinder Ø mm	Code	Item	Compliance
25-32	041453	D10x1,5	UNI 5589
40-50	041455	D16x1,5	
63-80	041456	D20x1,5	
100-125	041458	D27x2	DIN 936
160-200	041459	D36x2	

Bearing heads (DIN 648K) with female thread RF..SE



For cylinder Ø mm	Code	Item	Compliance
25-32	041565	RF10x1,5SE	ISO 8139
40-50	041557	RF16SE	
63-80	041559	RF20SE	
100-125	041562	RF30SE	
160-200	041563	RF35SE	

Self-aligning articulated coupling GB..



For cylinder Ø mm	Code	Item	Compliance
25-32	041705	GB050	-
40-50	041708	GB100	
63-80	041709	GB120	
100-125	041711	GB130	
160-200	041712	GB160-200	

Axial articulated coupling RBI..



For cylinder Ø mm	Code	Item	Compliance
25-32	041611	RBI10x1,5	-
50-63	041607	RBI16	
80-100	041609	RBI20	

Angular articulated coupling RBL..



For cylinder Ø mm	Code	Item	Compliance
40-50	041657	RBL16	-
63-80	041659	RBL20	

Self-aligning coupling GC..



For cylinder Ø mm	Code	Item	Compliance
40-50	041724	GCM16x1,5	-
63-80	041725	GCM20x1,5	
100-125	041726	GCM27x2	
160-200	041727	GCM36x2	

Rear standard hinge in aluminium AN..ALCN



For cylinder Ø mm	Code	Item	Compliance
32	040281	AN032ALCN	CNOMO
40-50	040282	AN040/050ALCN	
63-80	040284	AN063/080ALCN	
100-125	040286	AN100/125ALCN	
160-200	040288	AN160/200ALCN	

Nuts and growers to be ordered separately, see from page 1.101.20

Rear clevis* in aluminium CF..ALCN



For cylinder Ø mm	Code	Item	Compliance
32	040401	CF032ALCN	CNOMO
40	040402	CF040ALCN	
50	040403	CF050ALCN	
63	040404	CF063ALCN	
80	040405	CF080ALCN	
100	040406	CF100ALCN	
125	040407	CF125ALCN	
160	040408	CF160ALCN	
200	040409	CF200ALCN	

*Pin SEC..AQCN to be ordered separately, see page 1.14.110
Nuts and growers to be ordered separately, see from page 1.101.20

High foot* in aluminium P..ALCN



For cylinder Ø mm	Code	Item	Compliance
32	040101	P032ALCN	CNOMO
40	040102	P040ALCN	
50	040103	P050ALCN	
63	040104	P063ALCN	
80	040105	P080ALCN	
100	040106	P100ALCN	
125	040107	P125ALCN	
160	040108	P160ALCN	
200	040109	P200ALCN	

*Supplied individually
Nuts and growers to be ordered separately, see from page 1.101.20

Rear 90° hinge in aluminium AS..ALCN



For cylinder Ø mm	Code	Item	Compliance
32	040321	AS032ALCN	CNOMO
40-50	040322	AS040/050ALCN	
63-80	040324	AS063/080ALCN	
100-125	040326	AS100/125ALCN	
160-200	040328	AS160/200ALCN	

Low foot* in steel PB..AQCN



For cylinder Ø mm	Code	Item	Compliance
32	040161	PB032AQCN	CNOMO
40	040162	PB040AQCN	
50	040163	PB050AQCN	
63	040164	PB063AQCN	
80	040165	PB080AQCN	
100	040166	PB100AQCN	
125	040167	PB125AQCN	
160	040168	PB160AQCN	
200	040169	PB200AQCN	

*Supplied individually; Nuts and growers to be ordered separately, see from page 1.101.20

Counterbored flange in steel FL..AQCN



For cylinder Ø mm	Code	Item	Compliance
32	040621	FL032AQCN	CNOMO
40	040622	FL040AQCN	
50	040623	FL050AQCN	
63	040624	FL063AQCN	
80	040625	FL080AQCN	
100	040626	FL100AQCN	
125	040627	FL125AQCN	
160	040628	FL160AQCN	
200	040629	FL200AQCN	

Nuts and growers to be ordered separately, see from page 1.101.20

Threaded flange* in steel FLF..AQCN



For cylinder Ø mm	Code	Item	Compliance
32	040948	FLF032AQCN	CNOMO
40	040949	FLF040AQCN	
50	040950	FLF050AQCN	
63	040951	FLF063AQCN	
80	040952	FLF080AQCN	
100	040953	FLF100AQCN	
125	040954	FLF125AQCN	
160	040955	FLF160AQCN	
200	040956	FLF200AQCN	

*To be ordered togheter with the cylinder. For tie-rods dimensions, please see page 1.14.21 and 1.14.41; Nuts and growers to be ordered separately, see page 1.101.20

Bracket AS.. for magnetic reed switches T groove



For cylinder Ø mm	Code	Item	Cylinder matching
25 ÷ 40	072912	AS105	CM
50 ÷ 100	072913	AS106	
125	072909	AS102	
160 - 200	072910	AS103	

Bracket AS.. for high-temperatures magnetic reed switches



For cylinder Ø mm	Code	Item	Cylinder matching
25 ÷ 40	074041	AS117	CM
50 - 63	074043	AS118	
80 - 100	074087	AS119	
125	074155	AS120	
160 - 200	074169	AS121	

Adjustable center trunnion* in steel with grains CT..AQCN



For cylinder Ø mm	Code	Item	Compliance
32	040559	CT032AQCN	CNOMO
40	040558	CT040AQCN	
50	040538	CT050AQCN	
63	040540	CT063AQCN	
80	040545R	CT080AQCN	
100	040546R	CT100AQCN	
125	040580	CT125AQCN	
160	040630	CT160AQCN	
200	040597	CT200AQCN	

Support ST..AQIS to be ordered separately, see below.

*When mounting this accessory, the cylinder tie-rod T dimension (see page 1.14.21 or 1.14.41) is 0 for every bore. For the trunnion mounted on the cylinder, please order togheter with the cylinder.

Non adjustable center trunnion* in steel CTN..AQCN



For cylinder Ø mm	Code	Item	Compliance
32	040541	CTN032AQCN	CNOMO
40	040542	CTN040AQCN	
50	040543	CTN050AQCN	
63	040544	CTN063AQCN	
80	040545	CTN080AQCN	
100	040546	CTN100AQCN	
125	040547	CTN125AQCN	
160	040548	CTN160AQCN	
200	040549	CTN200AQCN	

Support ST..AQIS to be ordered separately, see below.

*When mounting this accessory, the cylinder tie-rod T dimension (see page 1.14.21 or 1.14.41) is 0 for every bore. For the trunnion mounted on the cylinder, please order togheter with the cylinder, indicating the XV dimension (cannot be modified), see page 1.99.52

Support for center trunnion in steel ST..AQIS



For cylinder Ø mm	Code	Item	Compliance
32	040681	ST032AQIS	ISO AT4
40-50	040682	ST040/050AQIS	
63-80	040684	ST063/080AQIS	
100-125	040686	ST100/125AQIS	
160-200	040688	ST160/200AQIS	

*Supplied individually

Pin for rear clevis in steel with seeger* SEC..AQCN



For cylinder Ø mm	Code	Item	Compliance
32	040221	SEC032AQCN	CNOMO
40	040222	SEC040AQCN	
50	040223	SEC050AQCN	
63	040224	SEC063AQCN	
80	040225	SEC080AQCN	
100	040226	SEC100AQCN	
125	040227	SEC125AQCN	
160	040228	SEC160AQCN	
200	040229	SEC200AQCN	

*Supplied with 2 seeger

Magnetic reed switch T groove ASV..



For cylinder Ø mm	Code	Item	Cylinder matching
25 ÷ 200	070946	ASV1C525	CM*
	071863	ASV1C550	
	071864	ASV1C51K	
	071189	ASV1C5M8	
	073639	ASV4D225	
	070246	ASV4D2M8	
	074900	ASV7N225	
	070247	ASV7N2M8	
	070372	ASV7M2M8	
	072918	ASV1H525	

*With bracket AS.. for magnetic reed switches T groove, see page 1.14.91

ATEX magnetic reed switch T groove MK..



For cylinder Ø mm	Code	Item	Compliance	Cylinder matching
25 ÷ 200	071120	MK500A	Ex 3D	CM*
	071108	MK502A	Ex II1G	

*With bracket AS.. for magnetic reed switches T groove, see page 1.14.91

High-temperatures magnetic reed switches ASH..



For cylinder Ø mm	Code	Item	Cylinder matching
25 ÷ 200	074047	ASH6C550	CM*

*With bracket AS.. for high-temperatures magnetic reed switches, see page 1.14.91

COMPACT
Cylinders ISO 21287



Find out our
key products

- **Solution for most applications**
- **Easy and intuitive choice**
- **Excellent value for money**
- **Wide availability**
- **Fast delivery**

Features and certifications

Series of compact cylinders conforming to ISO 21287 standards. The barrell with grooves allows the mounting of magnetic reed switches directly in the tube without brackets. Available in bores from Ø 16 to 125, single acting or double acting, magnetic, with elastic dampers on the piston. These cylinders are compatible with ISO 15552 mounting accessories. Supplied as standard in compliance with Reach and RoHS directives, and SIL certificated. On request, they can be also supplied according to the 2014/34/EU ATEX Directive.

21287

Type CIS Ø 16 ÷ 100

from page 1.16.20



Compact cylinders conforming to ISO 21287, available in bores from Ø 16 to 100, single acting, magnetic, with elastic dampers on piston.
Barrell with grooves allows mounting of magnetic reed switches directly, not protruding beyond the profile of the cylinder.

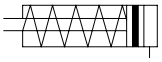

Type CI Ø 16 ÷ 125

from page 1.16.20



Compact cylinders conforming to ISO 21287, available in bores from Ø 16 to 125, double acting, magnetic, with elastic dampers on piston.
Barrell with grooves allows mounting of magnetic reed switches directly, not protruding beyond the profile of the cylinder.

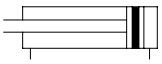

Options

Description		Symbol	Suffix
Anti-rotating plate (available only for CI type, up to Ø 100)		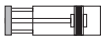	**N**
Rear spring (available only for CIS type)			**T**
Male threaded rod			**M**
Through rod			**P**
FKM seals	-20°C ÷ +150°C	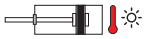	**V**
FKM rod seal	-20°C ÷ +80°C	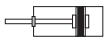	**V1**
Low temperature seals	-40°C ÷ +80°C	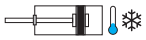	**BT**
Tandem forward movement piston rods coupled together (available from Ø 20 up to Ø 100)			**TA1**
Tandem forward movement piston rods independent (available from Ø 20 up to Ø 100)			**TA2**
Tandem back to back (available from Ø 20 up to Ø 100)		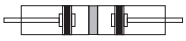	**TA3**
Tandem front to front (available from Ø 20 up to Ø 100)		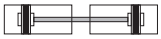	**TA4**
Extended rod (indicate the requested WH dimension in mm, E.g.: WH=100; for further information please contact the sales department)		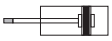	**WH=..**
Special thread (indicate the requested thread. E.g.: R-M 10x1,5; if combined with option M, the AM dimension of the special thread will be the same as the standard; the cylinder will be supplied without rod nut; for further information please contact the sales department).			**R-M..**
ATEX versions on request			**/ATEX**
Special versions on request			**/S**

The options, when this is possible, can be combined with each other. For options matching see from page 1.16.4; For code key see from page 1.16.6

Options matching

Series	Bore	Model	Standard options matching				
			N (Ø16÷100)	**T**	**M**	**P**	**V**
CIS	Ø 16 ÷ 100	Standard	-	●	●	-	●
		Rear spring (T)	-		●	-	●
		Male threaded rod (M)	-	●		-	●
CI	Ø 16 ÷ 125	Standard	●	-	●	●	●
	Ø 16 ÷ 100	Anti-rotating plate (N)		-	●(3)	●	●
	Ø 16 ÷ 125	Male threaded rod (M)	●(3)	-		●(3)	●
		Through rod (P)	●	-	●(3)		●

Key

● allowed matching; - not allowed matching

Options matching - notes

(1) Option **WH=..** require to indicate the desired dimension (in mm). If combined with through rod option (**P**), the extended rod option (**WH=..**) is applied on one rod side only. For further information please contact the sales department.

(2) Option **R-M..** require to indicate the desired thread. If combined with male threaded rod option (**M**) the cylinder will be supplied without rod nut. For further information please contact the sales department.

(3) The male threaded rod option (**M**) in combination with through rod option (**P**) is applied on both sides of rod, except when combined also with the anti-rotation plate option (**N**), in which case the male rod will only be applied on the side opposite the plate.

Standard options matching

V1	BT	TA1 (Ø20÷100)	TA2 (Ø20÷100)	TA3 (Ø20÷100)	TA4 (Ø20÷100)	WH=..[1]	R-M..[2]	/ATEX
●	●	-	-	-	-	●	●	●
●	●	-	-	-	-	●	●	●
●	●	-	-	-	-	●	●	●
●	●	●	●	●	●	●	●	●
●	●	●	●	●	-	●	●	●
●	●	●	●	●	-	●	●	●
●	●	-	-	-	-	●	●	●

Code key

Bore	/	Stroke	Type	Options		
40	**/**	**80**	**CI**			**M**
Ø 16, 20, 25, 32, 40, 50, 63, 80, 100, 125		See table on page 1.16.20	CIS Single acting Magnetic CI Double acting Magnetic	N	T	M

Standard materials

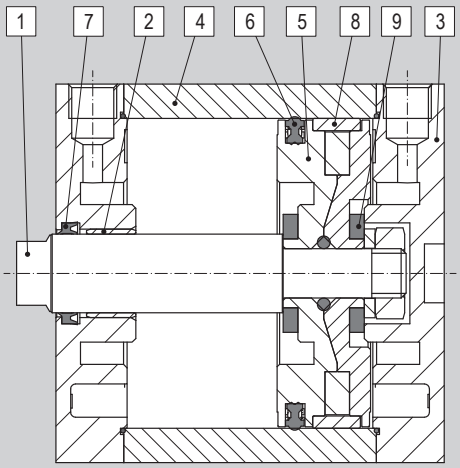

Position	Description	Materials			
		Ø 16	Ø 20 ÷ 25	Ø 32 ÷ 100	Ø 125
1	Rod	Stainless Steel AISI 304			
2	Bushing	Stainless Steel	Sintered bronze		PTFE
3	Heads	Die-cast painted aluminium			Anodised aluminium
4	Tube	Anodised aluminium			
5	Piston	Polyurethane (PU)	POM-C / Aluminium	Aluminium	
6	Piston seal	NBR			
7	Rod seal	Polyurethane (PU)			
8	Guide ring	Steel / PTFE			
9	Elastic dampers	NBR			
-	Other seals	NBR / Polyurethane (PU)			

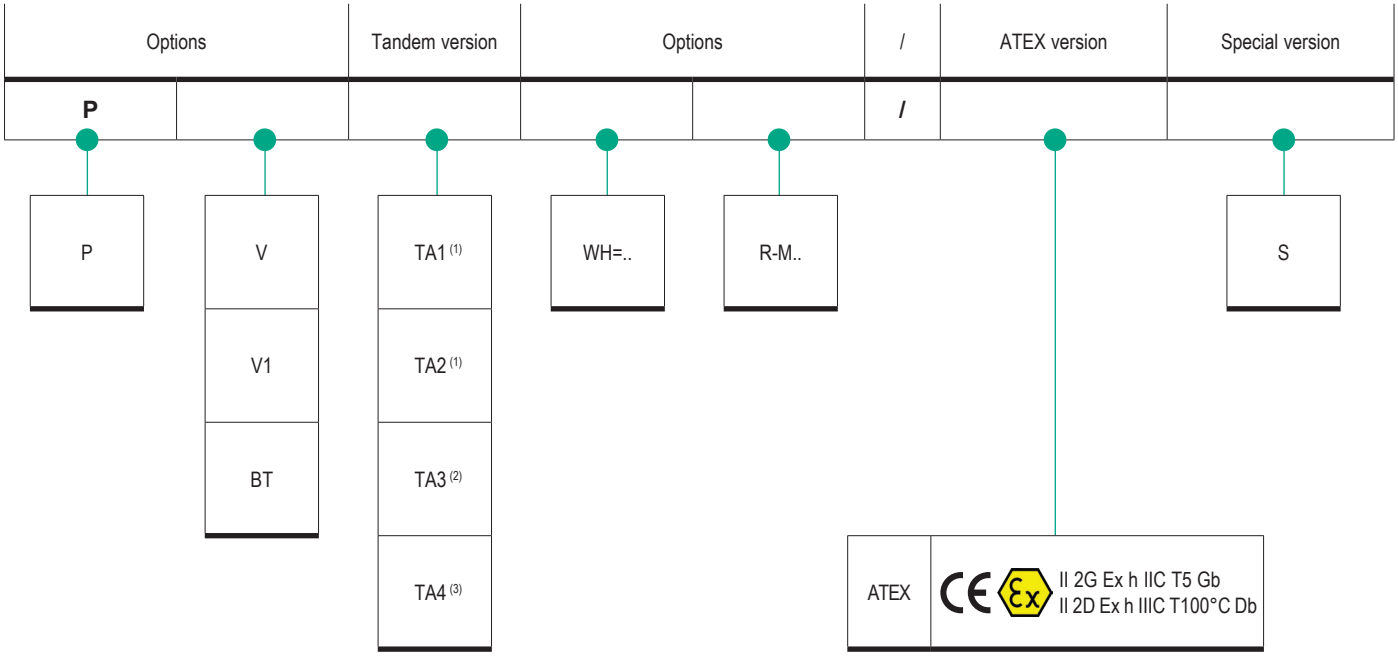

How to order

Bore		Stroke	Type	Options
40	/	80	CI	M P

Notes

Options in the same grid are alternative to each others.

For further information on options and their matching, see page 1.16.3 and page 1.16.4

For further information on the ATEX 2014/34/EU Directive, on classifications and protections, see from page III.1

(1) Availbale only for Ø 20, Ø 40 and Ø 63

(2) Available from Ø 20

(3) Available from Ø 20 to Ø 100

Standard* seal kit

Number of components	Description
n. 1	Rod seal
n. 2	Tube-head o-ring
n. 1	Piston seal
n. 2	Elastic dampers

*For cylinders with option P the kit include further components.

Standard seal kit code key

Cylinder bore	/	Seal kit	/	Cylinder type
40	/	SG	/	CI

- Cylinder bore: Ø 16, 20, 25, 32, 40, 50, 63, 80, 100, 125
- Seal kit: SG
- Cylinder type: CIS, CI

Accessories

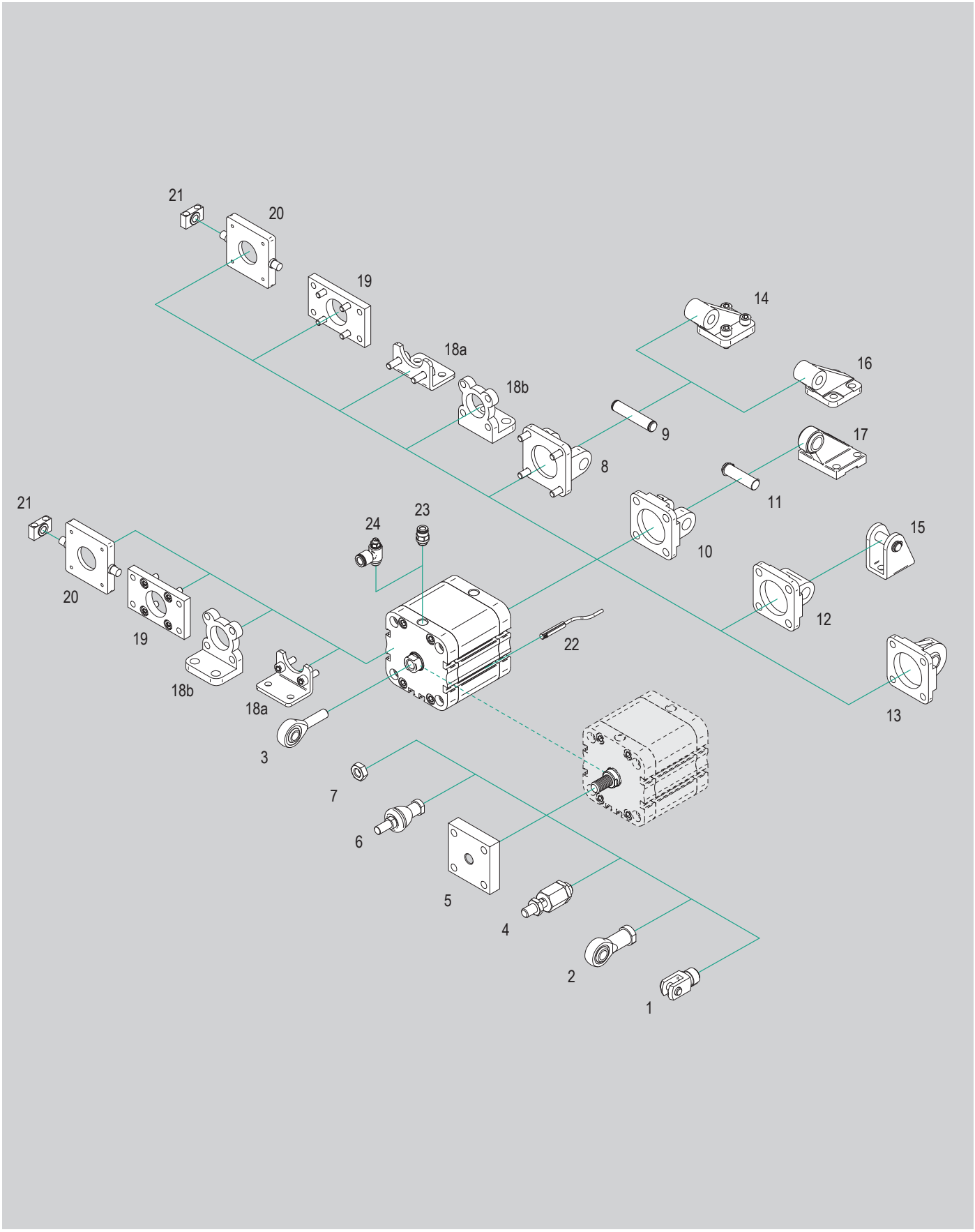

N.	Cylinder bore	Item	Description	Compliance	Matching		Code page	Data sheet page
					CIS	CI		
1	Ø 16 ÷ 125	FF..ISO	ISO female clevis with clip	ISO 8140	●(1)	●(1)	1.16.90	1.85.10
	Ø 20 ÷ 125	FFP..ISO	ISO female clevis with pin and seeger		●(1)	●(1)		
		FFN..ISO	ISO female clevis (body only)		●(1)	●(1)		1.85.11
2	Ø 16 ÷ 125	RF..SE	Bearing head (DIN 648K) with female thread	ISO 8139	●(1)	●(1)		1.90.1
3	Ø 16 ÷ 125	RM..SE	Bearing head (DIN 648K) with male thread		●	●		1.90.2
4	Ø 16 ÷ 125	GB..	Bearing - Self-aligning articulated coupling	-	●(1)	●(1)		1.90.10
5	Ø 32 ÷ 125	GC..	Self-aligning coupling		●(1)	●(1)		1.90.40
6	Ø 32 ÷ 125	RBI..	Bearing - Axial articulated coupling		●(1)	●(1)		1.90.20
		RBL..	Bearing - Angular articulated coupling		●(1)	●(1)		1.90.30
7	Ø 16 ÷ 125	D..	Rod nut	UNI 5589	●(1)	●(1)		1.90.70
8	Ø 32 ÷125	CF..ALIS	Rear clevis	ISO MP2	●	●	1.16.91	1.100.1
		CF..AQIS			●	●		1.100.50
9		SEC..AQIS	Pin for rear clevis	ISO AA4	●	●	1.16.92	1.100.56
10	Ø 32 ÷125	CFS..ALIS	Narrow rear clevis	ISO AB6	●	●	1.16.91	1.100.2
		CFS..AQIS			●	●		1.100.50
11		SEC..ARAQIS	Anti-rotating pin for narrow rear clevis	ISO AA6	●	●	1.16.92	1.100.56
12	Ø 16 ÷ 25	CM..ALUN	Rear eye	UNITOP	●	●	1.16.91	1.100.3
	Ø 32 ÷125	CM..ALIS		ISO MP4				
	Ø 20 ÷ 25	CM..AQUN		UNITOP	●	●		1.100.51
	Ø 32 ÷125	CM..AQIS		ISO MP4				
13	Ø 32 ÷ 125	CMS..ALIS	Narrow rear eye with bearing (DIN 648K)	ISO MP6	●	●		1.100.4
		CMS..AQIS			●	●		1.100.52
14	Ø 32 ÷ 125	ASV..ALIS	Rear 90° hinge	ISO AB7 CETOP RP 107P	●	●	1.16.93	1.100.4
		ASV..AQIS			●	●		1.100.53
15	Ø 16 ÷ 25	CF..+P		ISO MP3	●	●		
16	Ø 32 ÷ 125	AS..ALIS		ISO 6431	●	●		1.100.6
17	Ø 32 ÷ 125	ASS..AQIS	Rear 90° hinge with bearing (DIN 648K)	ISO CS7	●	●		1.100.52
18a	Ø 16 ÷ 25	PB..AQUN	Low foot	UNITOP	●	●	1.16.92	1.100.55
	Ø 32 ÷ 125	PB..AQIS		ISO MS1	●	●		
18b	Ø 32 ÷ 125	P..ALIS	Foot	ISO MS3	●	●		1.100.6
19	Ø 16 ÷ 25	FL..ALUN	Flange	UNITOP	●	●		1.100.5
		FL..AQUN			●	●		1.100.54
	Ø 32 ÷ 125	FLV..ALIS		ISO VDMA MP1/MP2	●	●		1.100.5
		FLV..AQIS			●	●		1.100.54
20	Ø 32 ÷ 125	CTA..AQIS	Center trunnion for heads	ISO MT5/MT6	●	●	1.16.93	1.100.57
21	Ø 32 ÷ 125	ST..AQIS	Support for center trunnion	ISO AT4	●	●		
22	Ø 16 ÷ 125	ASV..	Magnetic reed switch T groove	-	●	●		1.110.10
		MK..	ATEX magnetic reed switch T groove	2014/34/EU	●	●		1.113.1
23	Ø 16 ÷ 125	R..	Push-in fittings	-	●	●	4.2.1	
24	Ø 16 ÷ 125	V..C	Flow controls, for cylinders		●	●	4.94.1	

Key

● matching accessory; - not matching accessory

(1) Matching only with option **M**

Compact Cylinders ISO 21287
Series CIS - CI

Main features

16 ÷ 100
Bores Ø

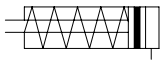

Single acting
Magnetic
With female thread

CIS
Type



16 ÷ 125
Bores Ø

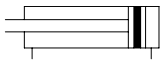

Double acting
Magnetic
With female thread

CI
Type



Technical data

Bore Ø mm		16	20	25	32	40	50	63	80	100	125
Fluid		Filtered compressed air with or without lubrication. Lubrication, if started, must be continued.									
Pressure range		2 ÷ 10 bar									
Temperature range		-20°C ÷ +80°C (standard / V1)			-20°C ÷ +150°C (V)			-40°C ÷ +80°C (BT)			
Port		M5			1/8"						1/4"
Grooves for reed switches		3			5			6			4
Strokes	CIS	5 ÷ 50 mm									-
	CI*	5 ÷ 250 mm			5 ÷ 400 mm						
Rod thread	CI-CIS	M4	M6		M8		M10		M12		M16
	CIM-CISM	M6	M8x1,25		M10x1,25		M12x1,25		M16x1,5		M20x1,5

* With option N the maximum stroke is 200 mm

Standard strokes

Stroke mm	**CIS** Bore Ø mm								
	16	20	25	32	40	50	63	80	100
5									
10									
15									
20									
25									
30									
40									
50									

Stroke mm	**CI** Bore Ø mm									
	16	20	25	32	40	50	63	80	100	125
5	⊶	⊶	⊶	⊶	⊶	⊶	⊶	⊶		
10	⊶	⊶	⊶	⊶	⊶	⊶	⊶	⊶		
15	⊶	⊶	⊶	⊶	⊶	⊶	⊶	⊶		
20	⊶	⊶	⊶	⊶	⊶	⊶	⊶	⊶		
25	⊶	⊶	⊶	⊶	⊶	⊶	⊶	⊶		
30	⊶	⊶	⊶	⊶	⊶	⊶	⊶	⊶		
40	⊶	⊶	⊶	⊶	⊶	⊶	⊶	⊶		
50	⊶	⊶	⊶	⊶	⊶	⊶	⊶	⊶		
60		⊶	⊶	⊶	⊶	⊶	⊶	⊶		
80				⊶	⊶	⊶	⊶	⊶		
100										
160										
200										
250										
300										
350										
400										

Key
Standard stroke

Theoretical thrust force

Unit: N

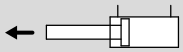

Ø Cylinder (mm)	Pressure (bar)
	6
16	-
20	188
25	294
32	482
40	754
50	1178
63	1869
80	3014
100	4710
125	-

Theoretical traction force

Unit: N

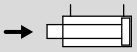

Ø Cylinder (mm)	Pressure (bar)
	6
16	-
20	141
25	247
32	414
40	633
50	989
63	1681
80	2720
100	4416
125	-

Theoretical spring force (for CIS type only)

Unit: N

Ø Cylinder (mm)	Strokes (mm)															
	5		10		15		20		25		30		40		50	
	F1	F2	F1	F2	F1	F2	F1	F2	F1	F2	F1	F2	F1	F2	F1	F2
16	-	-	-	-	-	-	-	-	-	-	-	-	-	-	-	-
20	22	25	20	25	17	25	14	25	11	25	-	-	-	-	-	-
25	30	33	26	33	23	33	20	33	16	33	-	-	-	-	-	-
32	50	54	46	54	42	54	38	54	34	54	-	-	-	-	-	-
40	52	55	50	55	46	55	43	55	40	55	-	-	-	-	-	-
50	59	63	54	63	49	63	44	63	39	63	-	-	-	-	-	-
63	72	78	67	78	62	78	56	78	51	78	-	-	-	-	-	-
80	110	116	105	116	100	116	95	116	89	116	-	-	-	-	-	-
100	152	159	144	159	136	159	129	159	121	159	-	-	-	-	-	-

Standard dimensions

Type: **CIS-CI**
Ø 16 ÷ 25

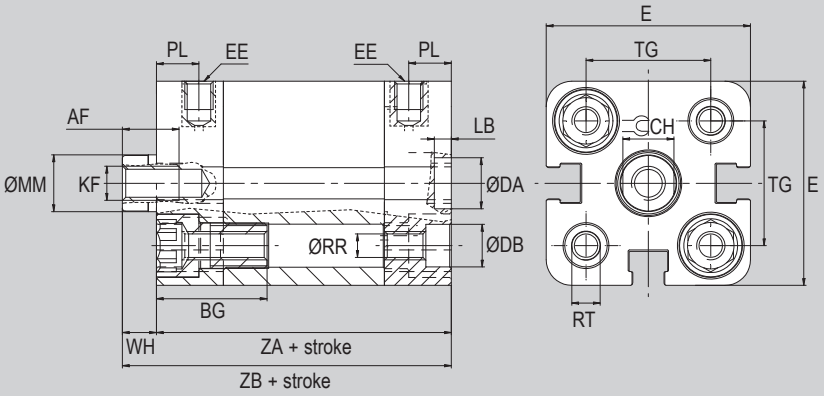

Type: **CIS-CI**
Ø 32 ÷ 50

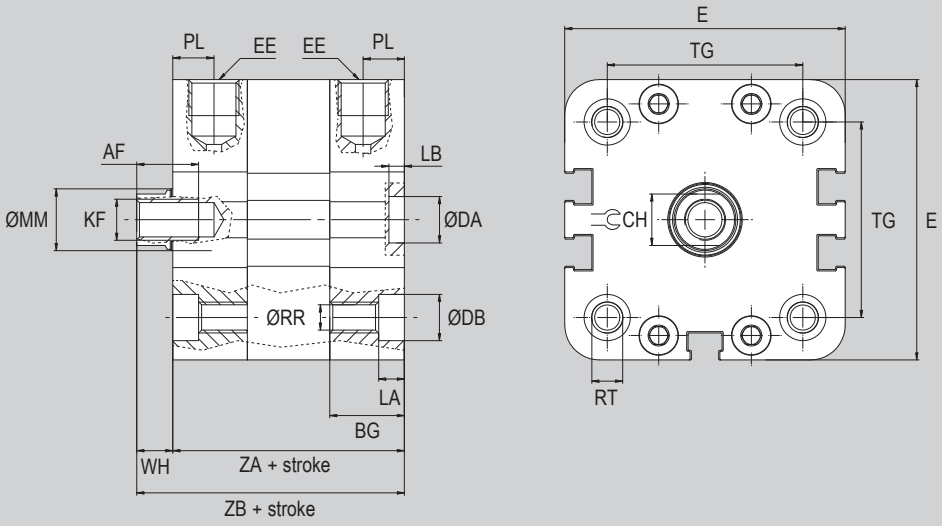

Ø (mm)	ØMM f7	AF	WH	ZA*	ZB*	KF	EE	BG	RR	TG	E	RT	LA	ØDB	PL	CH	ØDA h9	LB +0.1
16	8	10	4,5	35	39,5	M4	M5	11	3,2	18	29	M4	3,5	6	6,5	7	9	2,1
20	10	10	6	37	43	M6	M5	19,5	4,1	22	36	M5	4,5	7,5	7,5	9	9	3
25	10	10	6	39	45	M6	M5	19,5	4,1	26	40	M5	4,5	7,5	7,5	9	9	3
32	12	12	7	44	51	M8	G1/8"	14	5,1	32,5	49	M6	4,5	8	7,5	10	9	3
40	12	12	7	45	52	M8	G1/8"	14,5	5,1	38	54,5	M6	5	9	8	10	9	3
50	16	16	8	45	53	M10	G1/8"	14,5	6,6	46,5	65,5	M8	5	10,5	8	13	12	4

* CIS type Ø 20 for strokes > 30 mm, add +10 mm to dimension; CIS type Ø 32 ÷ 50 for strokes > 30 mm, add +20 mm to dimension;

Standard dimensions

Type: **CIS-CI**
Ø 63 ÷ 100

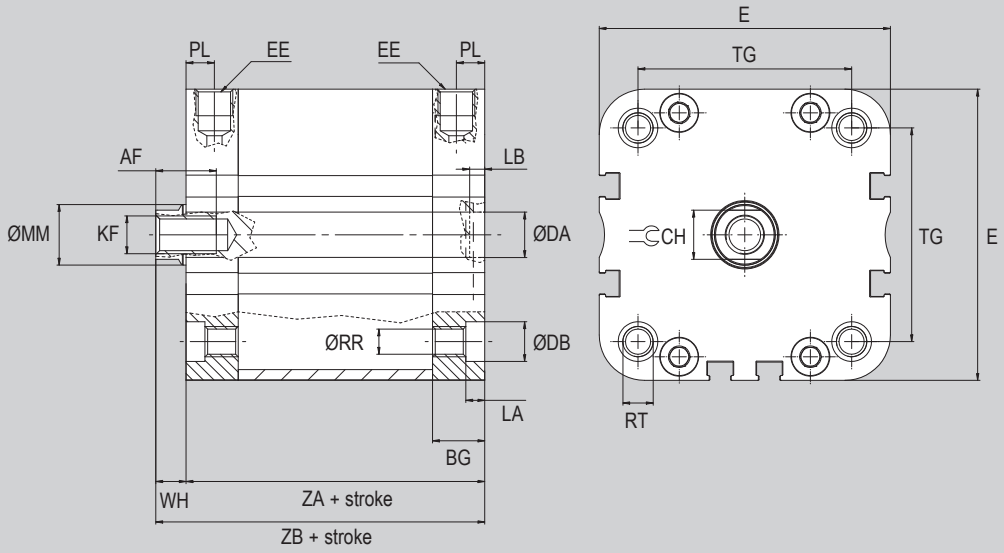

Type: **CI**
Ø 125

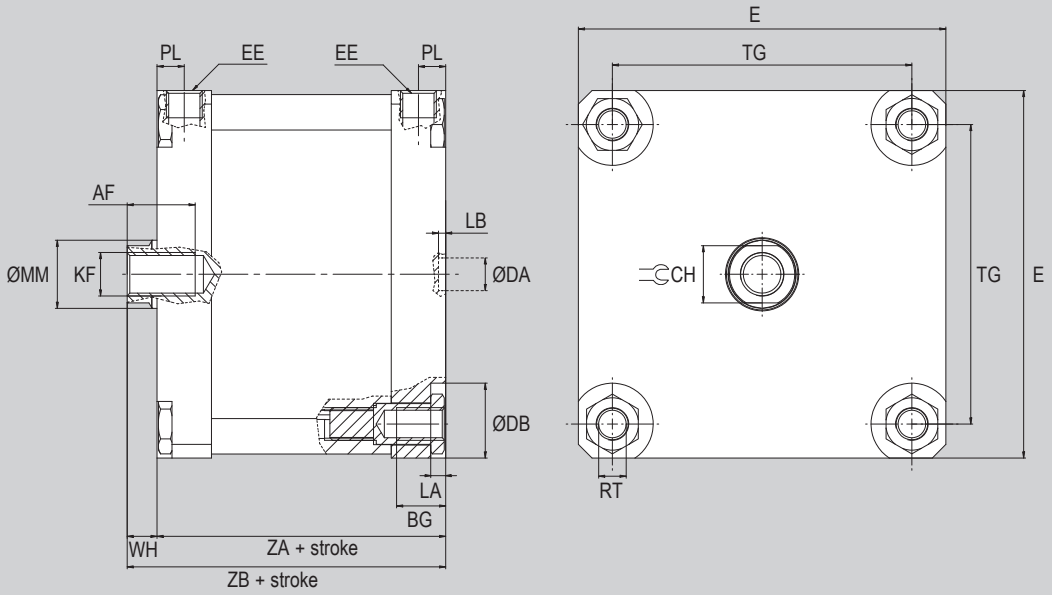

Ø (mm)	ØMM f7	AF	WH	ZA*	ZB*	KF	EE	BG	RR	TG	E	RT	LA	ØDB	PL	CH	ØDA h9	LB +0.1
63	16	16	8	49	57	M10	G1/8"	13,8	6,6	56,5	77	M8	5	10,5	7,5	13	12	4
80	20	20	10	54	64	M12	G1/8"	15	8,4	72	95,5	M10	3	13,5	8	17	12	4
100	25	20	10	67	77	M12	G1/8"	19,5	8,4	89	113,5	M10	3	14	10,5	21	12	4
125	25	25	11	81	92	M16	G1/4"	20	-	110	135	M12	-	-	10	21	12	2,6

* CIS type Ø 63 for strokes > 30 mm, add +20 mm to dimension; CIS type Ø 80 ÷ 100, for strokes > 30 mm, add +30 mm to dimension

Dimensions with options

Type: **...T**
Ø 16 ÷ 100

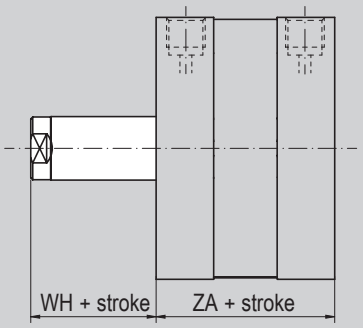

Type: **...M**
Ø 16 ÷ 125

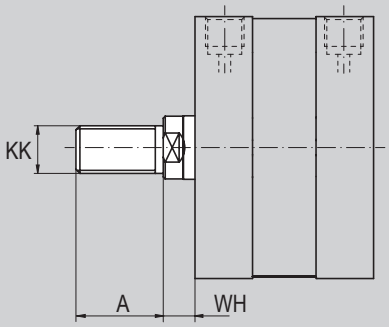

Type: **...P**
Ø 16 ÷ 125

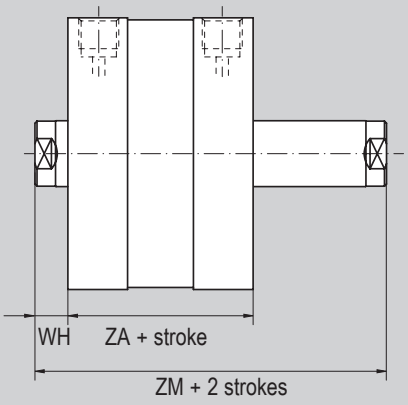

Type: **...N**
Ø 16 ÷ 100

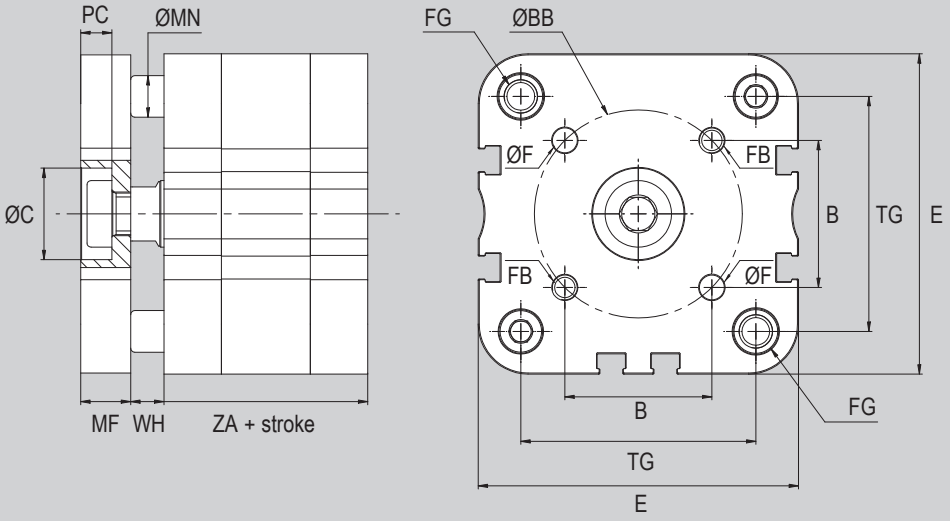

Ø (mm)	WH	MF +0.1	E	TG	B	FG	ØBB ±0.1	ØF +0.1	FB	ØC H9	PC	MN f7	ZA*	ZM	KK	A
16	4,5	6	29	18	10	M4	14	3	M3	7,5	4,5	6	35	43,2	M6	12
20	6	8	36	22	12	M5	17	4	M4	11	5	6	37	49	M8x1,25	16
25	6	8	40	26	15,6	M5	22	5	M5	14	5	6	39	51	M8x1,25	16
32	7	10	49	32,5	19,8	M6	28	5	M5	17	6,5	6	44	58	M10x1,25	19
40	7	10	54,5	38	23,3	M6	33	5	M5	17	6,5	8	45	59	M10x1,25	19
50	8	12	65,5	46,5	29,7	M8	42	6	M6	22	7,5	10	45	61	M12x1,25	22
63	8	12	77	56,5	35,4	M8	50	6	M6	22	7,5	10	49	65	M12x1,25	22
80	10	14	95,5	72	46	M10	65	8	M8	28	9	14	54	74	M16x1,5	28
100	10	14	113,5	89	56,6	M10	80	10	M10	30	10	14	67	87	M16x1,5	28
125	11	-	-	-	-	-	-	-	-	-	-	-	81	103	M20x1,5	40

* CIST type Ø 20 ÷ 63 for strokes > 30 mm, add +10 mm to dimension; CIST type Ø 80 ÷ 100, for strokes > 30 mm, add +20 mm to dimension;

Dimensions tandem versions

Type: **...TA1**
Ø 25 - 40 - 63

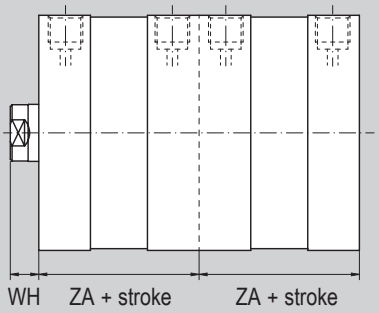

Type: **...TA2**
Ø 25 - 40 - 63

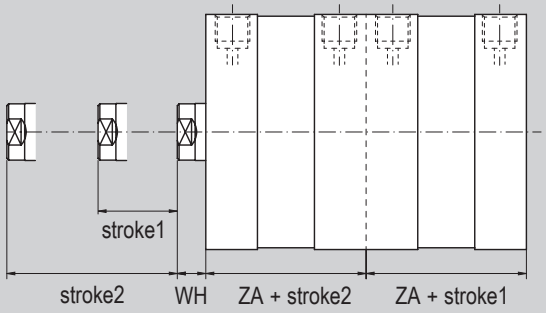

Type: **...TA3**
Ø 20 ÷ 125

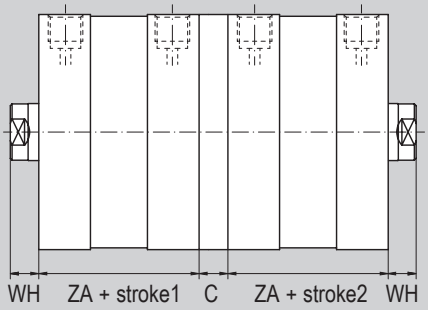

Type: **...TA4**
Ø 20 ÷ 100

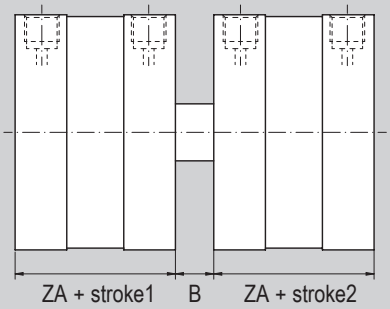

Ø mm	WH	ZA	B	C
20	6	37	9	13
25	6	39	11	13
32	7	44	12	15
40	7	45	13	15
50	8	45	15	15
63	8	49	15	15
80	10	54	16	17
100	10	67	20	19,5
125	11	81	-	19,5

Female clevis with clip FF..ISO



For cylinder Ø mm	Code	Item	Compliance
16	041002	FF06ISO/DIN	ISO 8140
20-25	041003	FF08ISO/DIN	
32-40	041004	FF10ISO	
50-63	041005	FF12ISO	
80-100	041006	FF16ISO	
125	041007	FF20ISO	

Matching with option M only

Female clevis with pin and seeger FFP..ISO



For cylinder Ø mm	Code	Item	Compliance
16	-	FFP06ISO/DIN	ISO 8140
20-25	-	FFP08ISO/DIN	
32-40	041051	FFP10ISO	
50-63	041040	FFP12ISO	
80-100	041013	FFP16ISO	
125	041017	FFP20ISO	

Matching with option M only

Female clevis (body only) FFN..ISO



For cylinder Ø mm	Code	Item	Compliance
16	041011	FFN06ISO/DIN	ISO 8140
20-25	041018	FFN08ISO/DIN	
32-40	041014	FFN10ISO	
50-63	041016	FFN12ISO	
80-100	041012	FFN16ISO	
125	041015	FFN20ISO	

Matching with option M only

Bearing heads (DIN 648K) with female thread RF..SE



For cylinder Ø mm	Code	Item	Compliance
16	041552	RF6SE	ISO 8139
20-25	041553	RF8SE	
32-40	041554	RF10SE	
50-63	041555	RF12SE	
80-100	041557	RF16SE	
125	041559	RF20SE	

Matching with option M only

Bearing heads (DIN 648K) with male thread RM..SE



For cylinder Ø mm	Code	Item	Compliance
16	041500	RM4SE	ISO 8139
20-25	041502	RM6SE	
32-40	041503	RM8SE	
50-63	041550	RM10SE/M10x1,5	DIN
80-100	041514	RM12SE/M12	
125	041517	RM16SE/M16	

Self-aligning articulated coupling GB..



For cylinder Ø mm	Code	Item	Compliance
16	041702	GB010	-
20-25	041703	GB020	
32-40	041704	GB040	
50-63	041706	GB060	
80-100	041708	GB100	
125	041709	GB120	

Matching with option M only

Axial articulated coupling RBI..



For cylinder Ø mm	Code	Item	Compliance
32-40	041604	RBI10	-
50-63	041605	RBI12	
80-100	041607	RBI16	
125	041609	RBI20	

Matching with option M only

Angular articulated coupling RBL..



For cylinder Ø mm	Code	Item	Compliance
32-40	041654	RBL10	-
50-63	041655	RBL12	
80-100	041657	RBL16	
125	041659	RBL20	

Matching with option M only

Self-aligning coupling GC..



For cylinder Ø mm	Code	Item	Compliance
32-40	041722	GCM10x1,25	-
50-63	041723	GCM12x1,25	
80-100	041724	GCM16x1,5	
125	041725	GCM20x1,5	

Matching with option M only

Rear clevis in aluminium with screws and pin CF..ALIS+VP



For cylinder Ø mm	Code	Item	Compliance
32	042050	CF032ALIS+VP	ISO MP2
40	042051	CF040ALIS+VP	
50	042052	CF050ALIS+VP	
63	042053	CF063ALIS+VP	
80	042054	CF080ALIS+VP	
100	042055	CF100ALIS+VP	
125	042056	CF125ALIS+VP	

Narrow rear clevis in aluminium with screws and pin CFS..ALIS+VP



For cylinder Ø mm	Code	Item	Compliance
32	042110	CFS032ALIS+VP	ISO AB6
40	042111	CFS040ALIS+VP	
50	042112	CFS050ALIS+VP	
63	042113	CFS063ALIS+VP	
80	042114	CFS080ALIS+VP	
100	042115	CFS100ALIS+VP	
125	042116	CFS125ALIS+VP	

Rear clevis in aluminium* with screws CF..ALIS+V



For cylinder Ø mm	Code	Item	Compliance
32	040441	CF032ALIS+V	ISO MP2
40	040442	CF040ALIS+V	
50	040443	CF050ALIS+V	
63	040444	CF063ALIS+V	
80	040445	CF080ALIS+V	
100	040446	CF100ALIS+V	
125	040447	CF125ALIS+V	

*Available also in steel (item CF..AQIS+V) in Ø 32 ÷ 125, see page 1.100.50

Narrow rear clevis in aluminium* with screws CFS..ALIS+V



For cylinder Ø mm	Code	Item	Compliance
32	040451	CFS032ALIS+V	ISO AB6
40	040452	CFS040ALIS+V	
50	040453	CFS050ALIS+V	
63	040454	CFS063ALIS+V	
80	040455	CFS080ALIS+V	
100	040456	CFS100ALIS+V	
125	040457	CFS125ALIS+V	

*Available also in steel (item CFS..AQIS+V) in Ø 32 ÷ 125, see page 1.100.50

Rear eye in aluminium* CM..ALUN



For cylinder Ø mm	Code	Item	Compliance
16	040701	CM012/016ALUN	UNI TOP
20	040702	CM020ALUN	
25	040703	CM025ALUN	

*Available also in steel (item CM..AQUN) in Ø 20 ÷ 25, see page 1.100.51
Screws to be ordered separately, see page 1.101.40

Rear eye in aluminium* with screws CM..ALIS+V



For cylinder Ø mm	Code	Item	Compliance
32	042061	CM032ALIS+V	ISO MP4
40	042062	CM040ALIS+V	
50	042063	CM050ALIS+V	
63	042064	CM063ALIS+V	
80	042065	CM080ALIS+V	
100	042066	CM100ALIS+V	
125	042067	CM125ALIS+V	

*Available also in steel (item CM..AQIS+V) in Ø 32 ÷ 125, see page 1.100.51

Narrow rear eye with bearing (DIN 648K) in aluminium* with screws CMS..ALIS+V



For cylinder Ø mm	Code	Item	Compliance
32	042101	CMS032ALIS+V	ISO MP6
40	042102	CMS040ALIS+V	
50	042103	CMS050ALIS+V	
63	042104	CMS063ALIS+V	
80	042105	CMS080ALIS+V	
100	042106	CMS100ALIS+V	
125	042107	CMS125ALIS+V	

Available also in steel (item CMS..AQIS+V) in Ø 32 ÷ 125, see page 1.100.52

Rod nut D..



For cylinder Ø mm	Code	Item	Compliance
16	041450	D6x1	UNI 5589
20-25	041451	D8x1,25	
32-40	041452	D10x1,25	
50-63	041454	D12x1,25	
80-100	041455	D16x1,5	
25	041456	D20x1,5	

Matching with option M only

Pin with seeger* in steel SEC..AQIS



For cylinder Ø mm	Code	Item	Compliance
32	040261	SEC032AQIS	ISO AA4
40	040262	SEC040AQIS	
50	040263	SEC050AQIS	
63	040264	SEC063AQIS	
80	040265	SEC080AQIS	
100	040266	SEC100AQIS	
125	040267	SEC125AQIS	

*Supplied with 2 seeger

Anti-rotating pin with seeger* in steel SEC..ARAQIS



For cylinder Ø mm	Code	Item	Compliance
32	040571	SEC032ARAQIS	ISO AA6
40	040572	SEC040ARAQIS	
50	040573	SEC050ARAQIS	
63	040574	SEC063ARAQIS	
80	040575	SEC080ARAQIS	
100	040576	SEC100ARAQIS	
125	040577	SEC125ARAQIS	

*Supplied with 1 seeger

Flange in aluminium FL..ALUN



For cylinder Ø mm	Code	Item	Compliance
12-16	040721	FL012/016ALUN	UNI TOP
20	040722	FL020ALUN	
25	040723	FL025ALUN	

Screws to be ordered separately, see page 1.101.40

Flange in aluminium with screws FLV..ALIS+V



For cylinder Ø mm	Code	Item	Compliance
32	042150	FLV032ALIS+V	ISO VDMA MF1 / MF2
40	042151	FLV040ALIS+V	
50	042152	FLV050ALIS+V	
63	042153	FLV063ALIS+V	
80	042154	FLV080ALIS+V	
100	042155	FLV100ALIS+V	
125	042156	FLV125ALIS+V	

Flange in steel FL..AQUN



For cylinder Ø mm	Code	Item	Compliance
12-16	040751	FL012016AQUN	UNI TOP
20	040752	FL020AQUN	
25	040753	FL025AQUN	

Screws to be ordered separately, see page 1.101.40

Flange in steel with screws FLV..AQIS+V



For cylinder Ø mm	Code	Item	Compliance
32	042119	FLV032AQIS+V	ISO VDMA MF1 / MF2
40	042120	FLV040AQIS+V	
50	042121	FLV050AQIS+V	
63	042122	FLV063AQIS+V	
80	042123	FLV080AQIS+V	
100	042124	FLV100AQIS+V	
125	042125	FLV125AQIS+V	

Low foot* in steel PB..AQUN



For cylinder Ø mm	Code	Item	Compliance
16	040761	PB012/016AQUN	UNI TOP
20	040762	PB20AQUN	
25	040763	PB25AQUN	

*Supplied individually
Screws to be ordered separately, see page 1.101.40

Low foot in steel* with screws PB..AQIS+V



For cylinder Ø mm	Code	Item	Compliance
32	042129	PB032AQIS+V	ISO MS1
40	042130	PB040AQIS+V	
50	042131	PB050AQIS+V	
63	042132	PB063AQIS+V	
80	042133	PB080AQIS+V	
100	042134	PB100AQIS+V	
125	042135	PB125AQIS+V	

*Supplied individually and available also in version foot, made of aluminium (item P..ALIS), for Ø 32 ÷ 125, see page 1.100.6

Center trunnion for heads in steel with screws CTA..AQIS+V



For cylinder Ø mm	Code	Item	Compliance
32	040591	CTA032AQIS+V	ISO MT5/MT6
40	040592	CTA040AQIS+V	
50	040593	CTA050AQIS+V	
63	040594	CTA063AQIS+V	
80	040595	CTA080AQIS+V	
100	040596	CTA100AQIS+V	
125	040598	CTA125AQIS+V	

Support ST..AQIS to be ordered separately, see next

Support for center trunnion* in steel ST..AQIS



For cylinder Ø mm	Code	Item	Compliance
32	040681	ST032AQIS	ISO AT4
40-50	040682	ST040/050AQIS	
63-80	040684	ST063/080AQIS	
100-125	040686	ST100/125AQIS	

*Supplied individually

Rear 90° hinge in aluminium* with screws ASV..ALIS+V



For cylinder Ø mm	Code	Item	Compliance
32	042081	ASV032ALIS+V	ISO AB7
40	042082	ASV040ALIS+V	
50	042083	ASV050ALIS+V	
63	042084	ASV063ALIS+V	
80	042085	ASV080ALIS+V	
100	042086	ASV100ALIS+V	cetop RP 107P
125	042087	ASV125ALIS+V	

*Available also in steel: item CF..+P for Ø 16 ÷ 25 and item ASV..AQIS for Ø 32 ÷ 125, see page 1.100.53

Rear 90° hinge in aluminium AS..ALIS



For cylinder Ø mm	Code	Item	Compliance
32	040361	AS032ALIS	ISO 6431
40	040362	AS040ALIS	
50	040363	AS050ALIS	
63	040364	AS063ALIS	
80	040365	AS080ALIS	
100	040366	AS100ALIS	
125	040367	AS125ALIS	

Rear 90° hinge with bearing (DIN 648K) in steel ASS..AQIS



For cylinder Ø mm	Code	Item	Compliance
32	040551	ASS032AQIS	ISO CS7
40	040552	ASS040AQIS	
50	040553	ASS050AQIS	
63	040554	ASS063AQIS	
80	040555	ASS080AQIS	
100	040556	ASS100AQIS	
125	040557	ASS125AQIS	

Magnetic reed switch T groove ASV..



For cylinder Ø mm	Code	Item	Cylinder matching
16 ÷ 125	070946	ASV1C525	CIS CI
	071863	ASV1C550	
	071864	ASV1C51K	
	071189	ASV1C5M8	
	073639	ASV4D225	
	070246	ASV4D2M8	
	074900	ASV7N225	
	070247	ASV7N2M8	
	070372	ASV7M2M8	
	072918	ASV1H525	

ATEX magnetic reed switch T groove MK..



For cylinder Ø mm	Code	Item	Compliance	Cylinder matching
16 ÷ 125	071120	MK500A	Ex 3D	CIS CI
	071108	MK502A	Ex II1G	

Notes

COMPACT
Cylinders UNITOP



Find out our
key products

- **Solution for most applications**
- **Easy and intuitive choice**
- **Excellent value for money**
- **Wide availability**
- **Fast delivery**

Features and certifications

Series of compact cylinders conforming to European UNITOP standards. The barrell with grooves allows the mounting of magnetic reed switches directly in the tube without brackets. Available in bores from Ø 12 to 100, single acting or double acting, magnetic, with elastic dampers on the piston.
Supplied as standard in compliance with Reach and RoHS directives, and SIL certificated. On request, they can be also supplied according to the 2014/34/EU ATEX Directive.

Type CS Ø 12 ÷ 100

from page 1.17.20



Compact cylinders conforming to European UNITOP standards, available in bores from Ø 12 to 100, single acting, magnetic with elastic dampers on piston.
Barrell with grooves allows mounting of magnetic reed switches directly, not protruding beyond the profile of the cylinder.

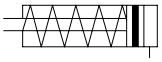

Type CD Ø 12 ÷ 100

from page 1.17.20



Compact cylinders conforming to European UNITOP standards, available in bores from Ø 12 to 100, double acting, magnetic with elastic dampers on piston.
Barrell with grooves allows mounting of magnetic reed switches directly, not protruding beyond the profile of the cylinder.

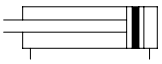

Options

Description	Symbol	Suffix
Anti-rotating plate (available only for CD type, from Ø 16)	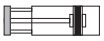	**N**
Rear spring (available only for CS type)		**T**
Male threaded rod	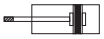	**M**
Through rod		**P**
FKM-PPDI seals -20°C ÷ +135°C	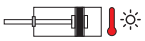	**V**
ATEX versions on request		**/ATEX**
Special versions on request		**/S**

The options, when this is possible, can be combined with each other. For options matching see from page 1.17.4; For code key see from page 1.17.5

Options matching

Series	Bore	Model	Standard options matching					
			N (Ø16÷100)	**T**	**M**	**P**	**V**	**/ATEX**
CS	Ø 12 ÷ 100	Standard	-	●	●	●	●	●
		Rear spring (T)	-		●	-	●	●
		Male threaded rod (M)	-	●		●[1]	●	●
		Through rod (P)	-	-	●[1]		●	●
CD	Ø 12 ÷ 100	Standard	●	-	●	●	●	●
	Ø 16 ÷ 100	Anti-rotating plate (N)		-	●[1]	●	●	●
	Ø 12 ÷ 100	Male threaded rod (M)	●[1]	-		●[1]	●	●
		Through rod (P)	●	-	●[1]		●	●

Key

● allowed matching; - not allowed matching

Options matching - notes

(1) The male threaded rod (option **M**) in combination with through rod (option **P**) is applied on both sides of rod, except when combined with the anti-rotation plate (option **N**), in which case the male rod will only be applied on the side opposite the plate.

Standard materials

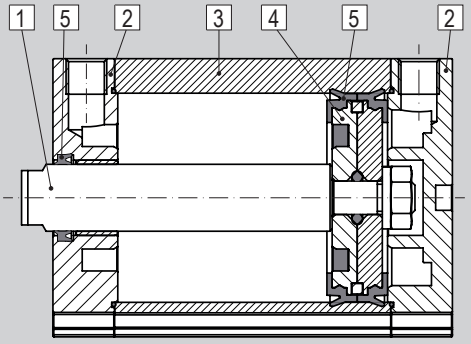

Position	Description	Materials
1	Rod	Stainless Steel AISI 304
2	Heads	Anodised aluminium
3	Tube	Anodised aluminium
4	Piston	Aluminium
5	Seals	NBR / Polyurethane (PU)
-	Anti-rotating plate (option N)	Anodised aluminium

Code key

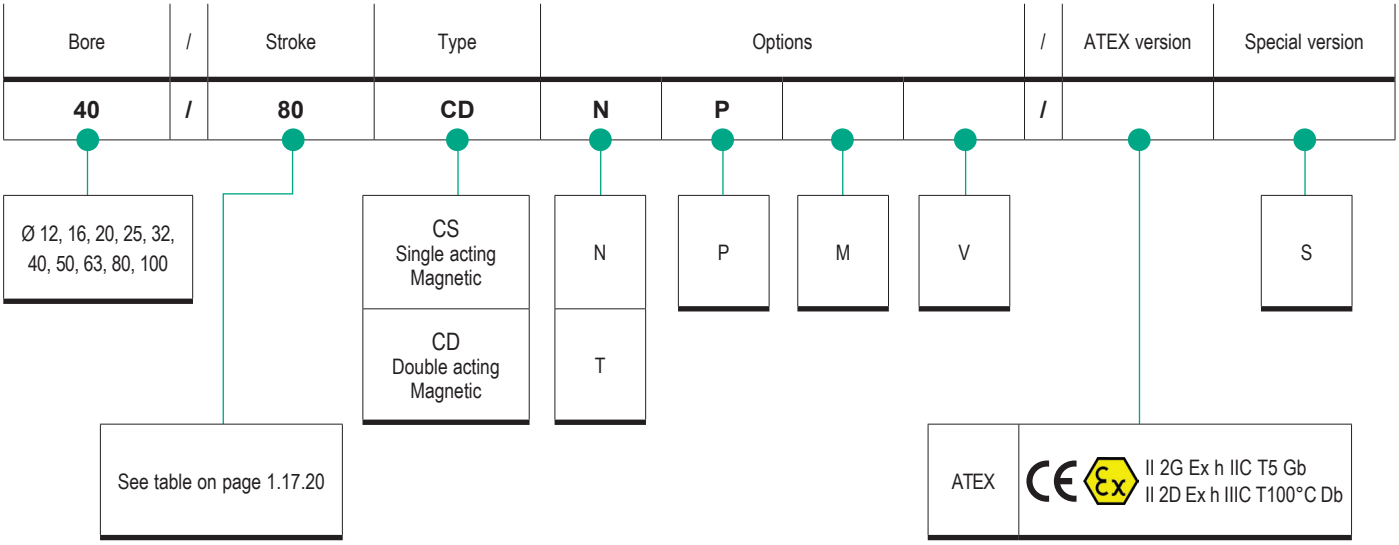

How to order

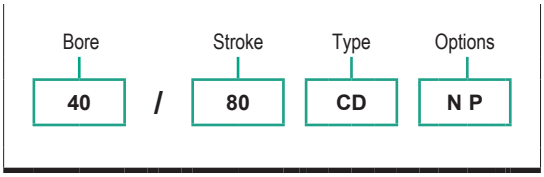

Notes

Options in the same grid are alternative to each others.

For further information on options and their matching, see page 1.17.3 and page 1.17.4

For further information on the ATEX 2014/34/EU Directive, on classifications and protections, see from page III.1

Standard* seal kit

Number of components	Description
n. 1	Rod seal
n. 2	Tube-head o-ring
n. 2	Piston seal

*For cylinders with option P, the kit include further components

Standard seal kit code key

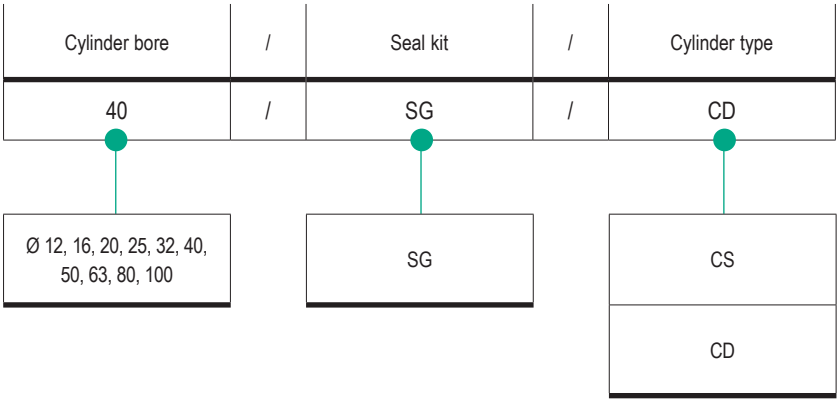

Accessories

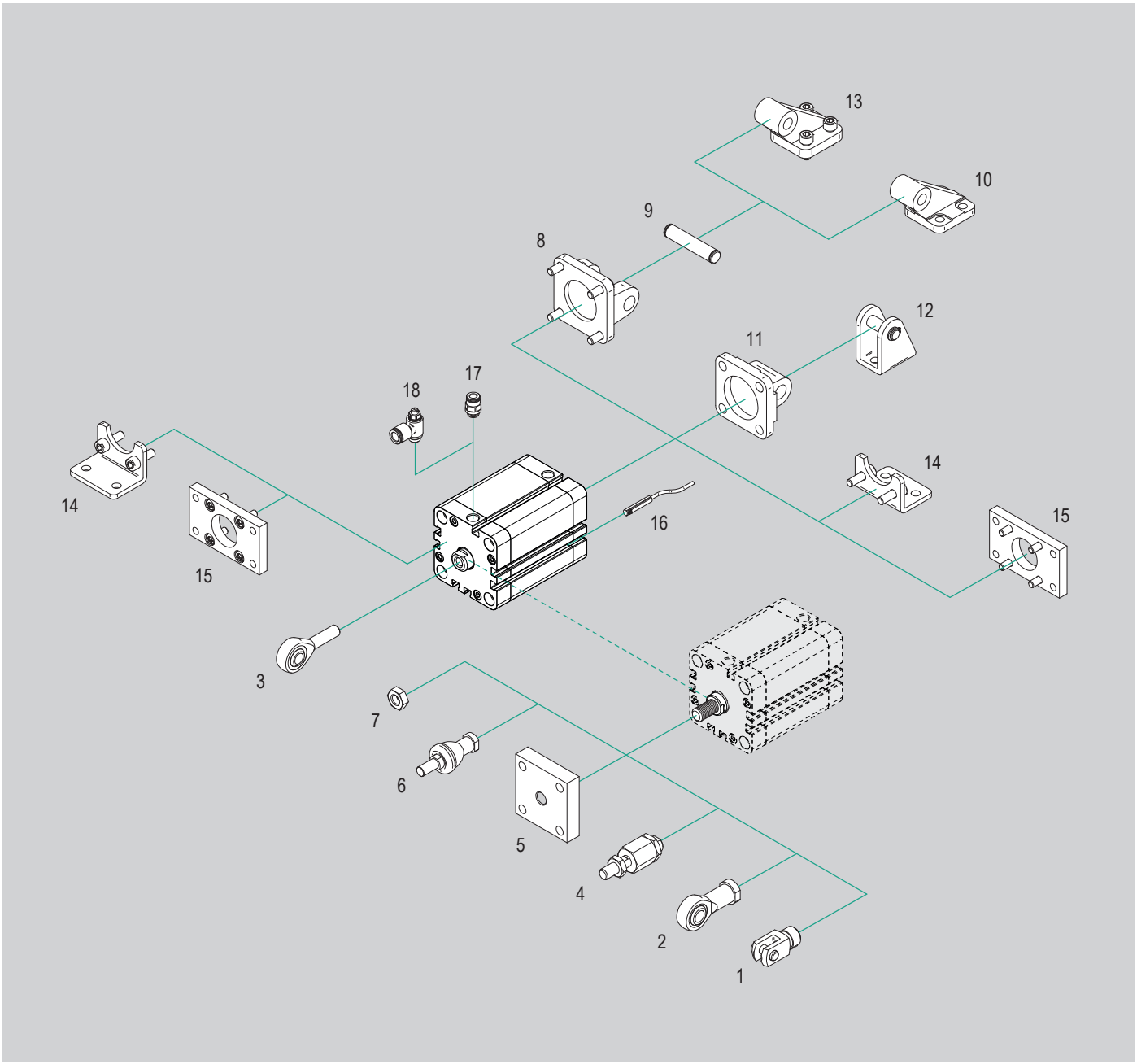

N.	Cylinder bore	Item	Description	Compliance	Matching		Code page	Data sheet page
					CS	CD		
1	Ø 12 ÷ 100	FF..ISO	ISO female clevis with clip	ISO 8140	●(1)	●(1)	1.17.90	1.85.10
	Ø 16 ÷ 100	FFP..ISO	ISO female clevis with pin and seeger		●(1)	●(1)		
	Ø 12 ÷ 100	FFN..ISO	ISO female clevis (body only)		●(1)	●(1)		1.85.11
2	Ø 12 ÷ 100	RF..SE	Bearing head (DIN 648K) with female thread	ISO 8139	●(1)	●(1)		1.90.1
3	Ø 16 ÷ 63	RM..SE	Bearing head (DIN 648K) with male thread	ISO 8139	●	●		1.90.2
	Ø 80 ÷ 100			DIN				
4	Ø 12 ÷ 100	GB..	Bearing - Self-aligning articulated coupling	-	●(1)	●(1)		1.90.10
5	Ø 16 ÷ 100	GC..	Self-aligning coupling		●(1)	●(1)		1.90.40
6	Ø 12 ÷ 100	RBI..	Bearing - Axial articulated coupling		●(1)	●(1)	1.17.91	1.90.20
		RBL..	Bearing - Angular articulated coupling		●(1)	●(1)		1.90.30
7	Ø 12 ÷ 100	D..	Rod nut	UNI 5589	●(1)	●(1)	1.17.90	1.90.70
8	Ø 32 ÷100	CF..ALUN	Rear clevis	UNITOP	●	●	1.17.91	1.100.100
		CF..AQUN			●	●		1.100.150
9	Ø 32 ÷100	SEC..AQIS	Pin for rear clevis		●	●	1.17.92	1.98.5
10	Ø 12 ÷ 25	CM..ALUN	Rear eye		●	●	1.17.91	1.100.100
	Ø 20 ÷ 25	CM..AQUN			●	●		1.100.150
11	Ø 32 ÷100	CM..ALIS		ISO MP4	●	●		1.100.102
		CM..AQIS			●	●		1.100.154
12	Ø 12 ÷ 25	CF..+P	Rear 90° hinge	ISO MP3	●	●	1.17.92	1.100.153
13	Ø 32 ÷100	ASV..ALIS		ISO AB7 CETOP RP 107P	●	●		1.100.102
		ASV..AQIS			●	●		1.100.153
14	Ø 12 ÷ 100	PB..AQUN	Low foot	UNITOP	●	●		1.100.152
15	Ø 12 ÷ 100	FLV..ALUN	Flange		●	●	1.17.91	1.100.101
		FLV..AQUN			●	●		1.100.151
16	Ø 12 ÷ 100	ASV..	Magnetic reed switch T groove	-	●	●	1.17.92	1.110.10
		MK..	ATEX magnetic reed switch T groove	2014/34/EU	●	●		1.113.1
17	Ø 12 ÷ 100	R..	Push-in fittings	-	●	●	4.2.1	
18	Ø 12 ÷ 100	V..C	Flow controls, for cylinders		●	●	4.94.1	

Key

● matching accessory; **-** not matching accessory

(1) Matching only with option **M**

Compact Cylinders UNITOP
Series CS - CD

Main features

12 ÷ 100
Bores Ø

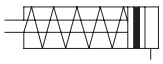

Single acting
Magnetic
With female thread

CS
Type



12 ÷ 100
Bores Ø

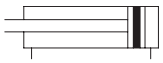

Double acting
Magnetic
With female thread

CD
Type



Technical data

Bore Ø mm		12	16	20	25	32	40	50	63	80	100
Fluid		Filtered compressed air with or without lubrication. Lubrication, if started, must be continued.									
Pressure range		2 ÷ 10 bar									
Temperature range		-30°C ÷ +80°C (standard)				-20°C ÷ +135°C (V)					
Port		M5				1/8"					1/4"
Grooves for switches		3						7			
Thrust force (N)*		59	110	177	270	448	700	1125	1800	2900	4510
Spring traction force (N)*		6		7	12	16	23	30	35	60	100
Strokes**	CS	5 ÷ 60 mm							10 ÷ 60 mm		
	CD	5 ÷ 100 mm	5 ÷ 125 mm	5 ÷ 160 mm		5 ÷ 200 mm		5 ÷ 250 mm	10 ÷ 250 mm		
Rod thread	CS-CD	M3	M4	M5		M6		M8		M10	M12
	CSM-CDM	M6	M8	M10x1,25				M12x1,25		M16x1,5	M20x1,5

*For cylinders CS type; **With option N, in Ø 20 maximum stroke is 125 mm

Standard strokes

	CS Bore Ø mm									
Stroke mm	12	16	20	25	32	40	50	63	80	100
5	■	■	■	■	■	■	■			
10	■	■	■	■	■	■	■	■	■	■
15	■	■	■	■	■	■	■	■	■	■
20	■	■	■	■	■	■	■	■	■	■
25	■	■	■	■	■	■	■	■	■	■
30	■	■	■	■	■	■	■	■	■	■
40	■	■	■	■	■	■	■	■	■	■
50	■	■	■	■	■	■	■	■	■	■
60	■	■	■	■	■	■	■	■	■	■

	CD Bore Ø mm									
Stroke mm	12	16	20	25	32	40	50	63	80	100
5	■	■	■	■	■	■	■			
10	■	■	■	■	■	■	■	■	■	■
15	■	■	■	■	■	■	■	■	■	■
20	■	■	■	■	■	■	■	■	■	■
25	■	■	■	■	■	■	■	■	■	■
30	■	■	■	■	■	■	■	■	■	■
40	■	■	■	■	■	■	■	■	■	■
50	■	■	■	■	■	■	■	■	■	■
60	■	■	■	■	■	■	■	■	■	■
80	■	■	■	■	■	■	■	■	■	■
100	■	■	■	■	■	■	■	■	■	■
125		■	■	■	■	■	■	■	■	■
160			■	■	■	■	■	■	■	■
200					■	■	■	■	■	■
250							■	■	■	■

Key
■ Standard stroke

Standard dimensions

Type: **CS-CD**
Ø 12 ÷ 25

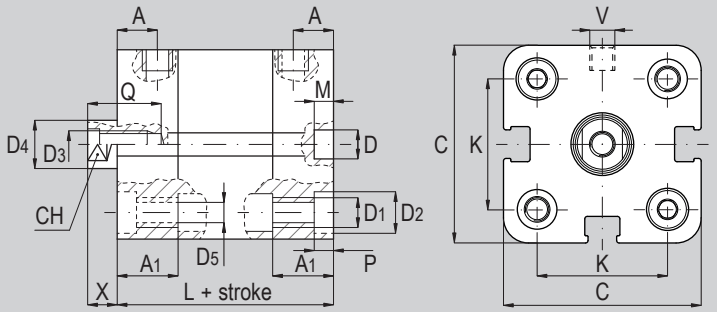

Type: **CS-CD**
Ø 32 ÷ 40

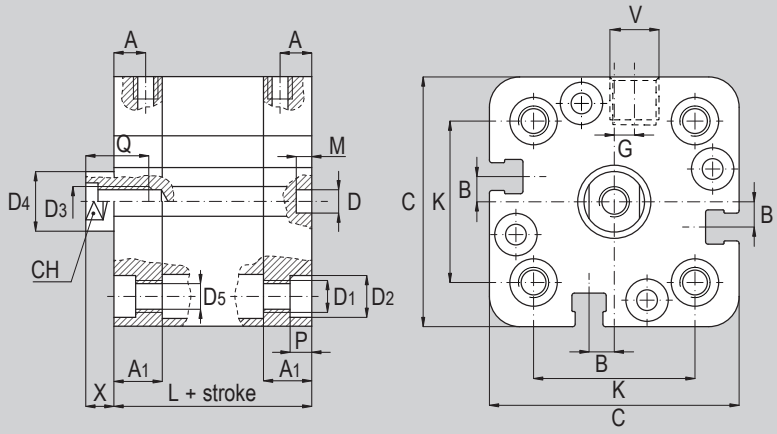

Type: **CS-CD**
Ø 50 ÷ 100

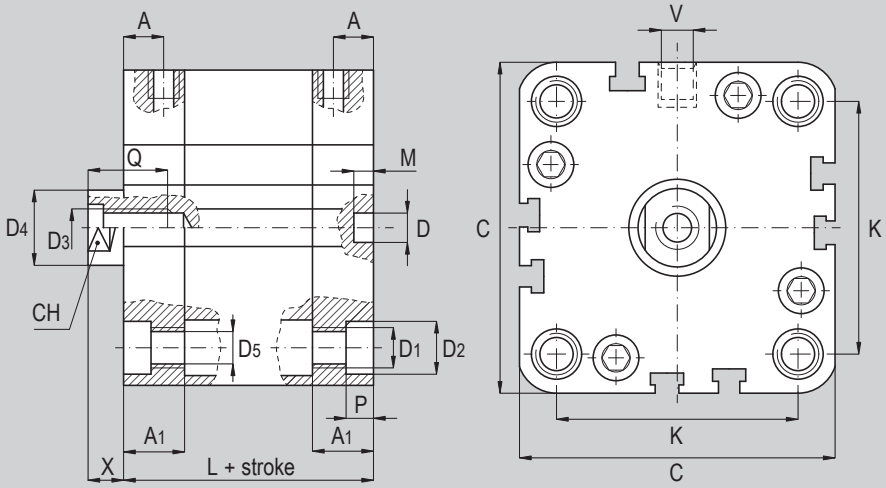

Ø (mm)	C	CH	D Ø	D_1 Ø	D_2 Ø	D_3 Ø	D_4 Ø	D_5 Ø	G	V	A	A_1	B	K	P	M	Q	X	L
12	29	5	6	M4	6	M3	6	3,3	-	M5	8	12,25	-	18	3,5	4	8	4,5	38(1)
16	29	6	6	M4	6	M4	8	3,3	-	M5	8	12,25	-	18	3,5	4	11	4,5	38(1)
20	36	8	6	M5	7,5	M5	10	4,2	-	M5	8	12,25	-	22	4,5	4	12	4,5	38(1)
25	40	8	6	M5	7,5	M5	10	4,2	-	M5	8	12,75	-	26	4,5	4	12	5,5	39,5(2)
32	50	10	6	M6	9	M6	12	5,2	4	1/8”	8	14,5	3	32	5,5	4	15	6	44,5(2)
40	58	10	6	M6	9	M6	12	5,2	3	1/8”	8	14,75	5	42	5,5	4	15	6,5	45,5(2)
50	67	13	6	M8	10,5	M8	16	6,7	-	1/8”	8	14,75	-	50	6,5	4	17	7,5	45,5(2)
63	80	13	8	M10	13,5	M8	16	8,5	-	1/8”	8	14,25	-	62	8,5	4	17	7,5	50(2)
80	100	17	8	M10	13,5	M10	20	8,5	-	1/8”	8,5	16	-	82	8,5	4	17	8	56(3)
100	124	22	8	M10	13,5	M12	25	8,5	-	1/4”	10,5	19,25	-	103	8,5	4	22	10	66,5(3)

(1) CS type, for strokes > 30 mm, add +10 mm to dimension;
(2) CS type, for strokes > 30 mm, add +20 mm to dimension;
(3) CS type, for strokes > 30 mm, add +30 mm to dimension.

Dimensions with options

Type: **...T**

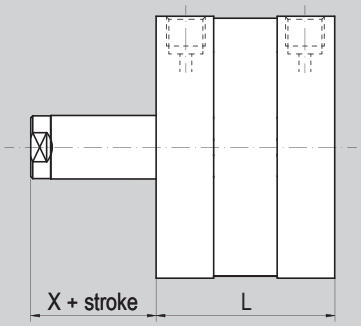

Type: **...M**

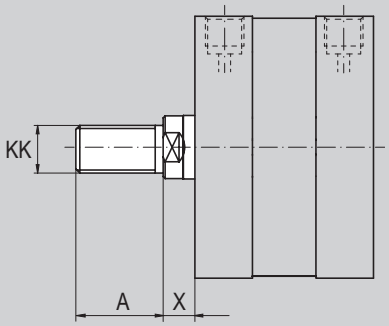

Type: **...P**

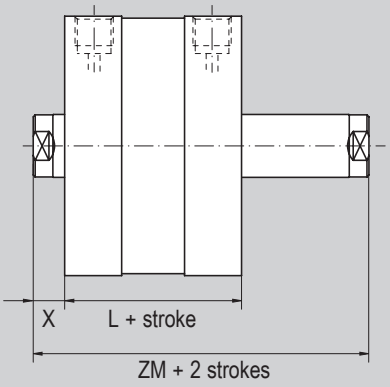

Type: **...N**
Ø 16 ÷ 100

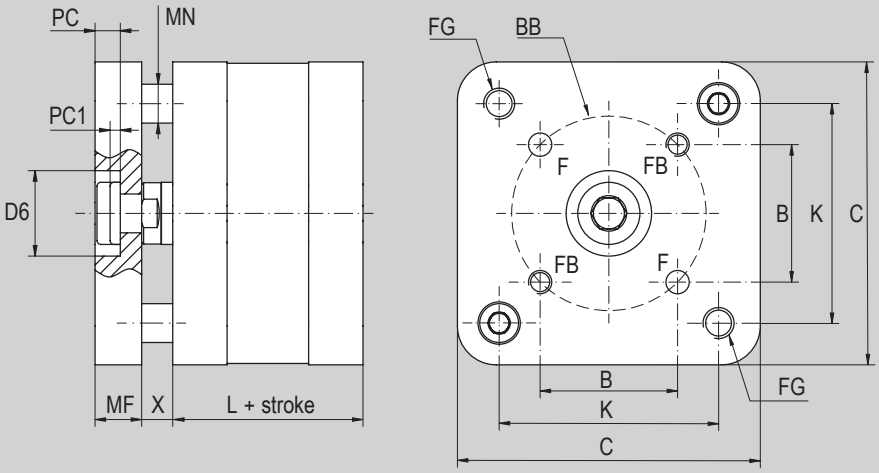

Ø (mm)	A	KK	X	L	MF +0,1	C	K	B	FG	ØBB ±0,1	ØF +0,1	FB	ZM	ØD6 h9	PC	MN f7	PC1
12	16	M6	4,5	38(1)	-	-	-	-	-	-	-	-	47	-	-	-	-
16	20	M8x1.25	4,5	38(1)	6	29	18	9,9	M5	14	3	M3	47	9	3,8	5	1
20	22	M10x1.25	4,5	38(1)	8	36	22	12	M5	17	4	M4	47	11	5	5	1,5
25	22	M10x1.25	5,5	39,5(1)	8	40	26	15,6	M5	22	5	M5	50,5	14	5	6	1,5
32	22	M10x1.25	6	44,5(1)	10	50	32	19,8	M6	28	5	M5	56,5	17	6,5	8	2,5
40	22	M10x1.25	6,5	45,5(1)	10	58	42	23,3	M6	33	5	M5	58,5	17	6,5	10	2,5
50	24	M12x1.25	7,5	45,5(1)	12	67	50	29,7	M8	42	6	M6	60,5	22	7,5	10	2,5
63	24	M12x1.25	7,5	50(1)	12	80	62	35,4	M10	50	6	M6	65	22	7,5	10	2,5
80	32	M16x1.5	8	56(2)	14	100	82	46	M10	65	8	M8	72	28	9	14	3
100	40	M20x1.5	10	66,5(2)	14	124	103	56,6	M10	80	10	M10	86,5	30	10	14	3

(1) CS type, with option T, for strokes > 30 mm, add +10 mm to dimension;
(2) CS type, with option T, for strokes > 30 mm, add +20 mm to dimension;

Female clevis with clip FF..ISO



For cylinder Ø mm	Code	Item	Compliance
12	041002	FF06ISO/DIN	ISO 8140
16	041003	FF08ISO/DIN	
20÷40	041004	FF10ISO	
50÷63	041005	FF12ISO	
80	041006	FF16ISO	
100	041007	FF20ISO	

Matching with option M only

Female clevis with pin and seeger FFP..ISO



For cylinder Ø mm	Code	Item	Compliance
12	-	FFP06ISO/DIN	ISO 8140
16	041049	FFP08ISO/DIN	
20÷40	041051	FFP10ISO	
50÷63	041040	FFP12ISO	
80	041013	FFP16ISO	
100	041017	FFP20ISO	

Matching with option M only

Female clevis (body only) FFN..ISO



For cylinder Ø mm	Code	Item	Compliance
12	041011	FFP06ISO/DIN	ISO 8140
16	041018	FFP08ISO/DIN	
20÷40	041014	FFN10ISO	
50÷63	041016	FFN12ISO	
80	041012	FFN16ISO	
100	041015	FFN20ISO	

Matching with option M only

Rod nut D..



For cylinder Ø mm	Code	Item	Compliance
12	041450	D6x1	UNI 5589 DIN 936
16	041451	D8x1,25	
20÷40	041452	D10x1,25	
50÷63	041454	D12x1,25	
80	041455	D16x1,5	
100	041456	D20x1,5zB	

Matching with option M only

Bearing heads (DIN 648K) with female thread RF..SE



For cylinder Ø mm	Code	Item	Compliance
12	041552	RF6SE	ISO 8139
16	041553	RF8SE	
20÷40	041554	RF10SE	
50÷63	041555	RF12SE	
80	041557	RF16SE	
100	041559	RF20SE	

Matching with option M only

Bearing heads (DIN 648K) with male thread RM..SE



For cylinder Ø mm	Code	Item	Compliance
16	041500	RM4SE	ISO 8139
20-25	041501	RM5SE	
32-40	041502	RM6SE	
50÷63	041503	RM8SE	
80	041550	RM10SE/M10x1,5	DIN
100	041514	RM12SE/M12x1,75	

Self-aligning articulated coupling GB..



For cylinder Ø mm	Code	Item	Compliance
12	041702	GB010	-
16	041703	GB020	
20÷40	041704	GB040	
50÷63	041706	GB060	
80	041708	GB100	
100	041709	GB120	

Matching with option M only

Self-aligning coupling GC..

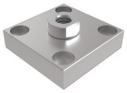

For cylinder Ø mm	Code	Item	Compliance
20÷40	041722	GCM10x1,25	-
50÷63	041723	GCM12x1,25	
80	041724	GCM16x1,5	
100	041725	GCM20x1,5	

Matching with option M only

Axial articulated coupling RBI..



For cylinder Ø mm	Code	Item	Compliance
12	041602	RBI6	-
16	041603	RBI8	
20÷40	041604	RBI10	
50÷63	041605	RBI12	
80	041607	RBI16	
100	041609	RBI20	

Matching with option M only

Angular articulated coupling RBL..



For cylinder Ø mm	Code	Item	Compliance
12	041652	RBL6	-
16	041653	RBL8	
20÷40	041654	RBL10	
50÷63	041655	RBL12	
80	041657	RBL16	
100	041659	RBL20	

Matching with option M only

Rear clevis in aluminium* CF..ALUN



For cylinder Ø mm	Code	Item	Compliance
32	040711	CF032ALUN	UNI TOP
40	040712	CF040ALUN	
50	040713	CF050ALUN	
63	040714	CF063ALUN	
80	040715	CF080ALUN	
100	040716	CF100ALUN	

*Available also in steel (item CF..AQUN) in Ø 32 ÷ 100, see page 1.100.150
Pin (item SEC..AQIS) to be ordered separately, see page 1.17.110
Screws to be ordered separately, see from page 1.101.40

Rear eye in aluminium* CM..ALUN



For cylinder Ø mm	Code	Item	Compliance
12-16	040701	CM012/016ALUN	UNI TOP
20	040702	CM020ALUN	
25	040703	CM025ALUN	

*Available also in steel (item CM..AQUN) in Ø 20 ÷ 25, see page 1.100.150
Screws to be ordered separately, see from page 1.101.40

Rear 90° hinge in aluminium* with screws ASV..ALIS+V



For cylinder Ø mm	Code	Item	Compliance
32	042081	ASV032ALIS+V	ISO AB7
40	042082	ASV040ALIS+V	
50	042083	ASV050ALIS+V	
63	042084	ASV063ALIS+V	cetop RP 107P
80	042085	ASV080ALIS+V	
100	042086	ASV100ALIS+V	

*Available also in steel: item CF..+P for Ø 12 ÷ 25 and item ASV..AQIS for Ø 32 ÷ 100, see page 1.100.153

Rear eye in aluminium* with screws CM..ALIS+V



For cylinder Ø mm	Code	Item	Compliance
32	042061	CM032ALIS+V	ISO MP4
40	042062	CM040ALIS+V	
50	042063	CM050ALIS+V	
63	042064	CM063ALIS+V	
80	042065	CM080ALIS+V	
100	042066	CM100ALIS+V	

*Available also in steel (item CM..AQIS+V) in Ø 32 ÷ 100, see page 1.100.154

Flange in aluminium FL..ALUN





For cylinder Ø mm	Code	Item	Compliance
12-16	040721	FL012/016ALUN	UNI TOP
20	040722	FL020ALUN	
25	040723	FL025ALUN	
32	040724	FL032ALUN	
40	040725	FL040ALUN	
50	040726	FL050ALUN	
63	040727	FL063ALUN	
80	040728	FL080ALUN	
100	040729	FL100ALUN	

Screws to be ordered separately, see from page 1.101.40

Flange in steel FL..AQUN





For cylinder Ø mm	Code	Item	Compliance
12-16	040751	FL012016AQUN	UNI TOP
20	040752	FL020AQUN	
25	040753	FL025AQUN	
32	040754	FL032AQUN	
40	040755	FL040AQUN	
50	040756	FL050AQUN	
63	040757	FL063AQUN	
80	040758	FL080AQUN	
100	040759	FL100AQUN	

Screws to be ordered separately, see from page 1.101.40

Low foot* in steel PB..AQUN



For cylinder Ø mm	Code	Item	Compliance
12-16	040761	PB012/016AQUN	UNI TOP
20	040762	PB20AQUN	
25	040763	PB25AQUN	
32	040764	PB32AQUN	

*Supplied individually.
Screws to be ordered separately, see from page 1.101.40

Low foot* in steel PB..AQUN



For cylinder Ø mm	Code	Item	Compliance
40	040765	PB040AQUN	UNI TOP
50	040766	PB050AQUN	
63	040767	PB063AQUN	
80	040768	PB080AQUN	
100	040769	PB100AQUN	

*Supplied individually.
Screws to be ordered separately, see from page 1.101.40

Pin with seeger in steel SEC..AQIS



For cylinder Ø mm	Code	Item	Compliance
32	040261	SEC032AQIS	ISO AA4
40	040262	SEC040AQIS	
50	040263	SEC050AQIS	
63	040264	SEC063AQIS	
80	040265	SEC080AQIS	
100	040266	SEC100AQIS	

*Supplied with 2 seeger

Magnetic reed switch T groove ASV..



For cylinder Ø mm	Code	Item	Cylinder matching
12 ÷ 100	070946	ASV1C525	CS CD
	071863	ASV1C550	
	071864	ASV1C51K	
	071189	ASV1C5M8	
	073639	ASV4D225	
	070246	ASV4D2M8	
	074900	ASV7N225	
	070247	ASV7N2M8	
	070372	ASV7M2M8	
	072918	ASV1H525	

ATEX magnetic reed switch T groove MK..



For cylinder Ø mm	Code	Item	Compliance	Cylinder matching
12 ÷ 100	071120	MK500A	Ex 3D	CS CD
	071108	MK502A	Ex II1G	

Notes

COMPACT
Cylinders



Find out our
key products

- **Solution for most applications**
- **Easy and intuitive choice**
- **Excellent value for money**
- **Wide availability**
- **Fast delivery**

Features and certifications

Series of compact cylinders not conforming to standards, available in bores from Ø 6 to 32, double acting, magnetic or non magnetic. The barrell with grooves allows the magnetic versions to mount magnetic reed switches directly in the tube.
Supplied as standard in compliance with Reach and RoHS directives.

Type DU Ø 16 ÷ 32

from page 1.18.20



Compact cylinders not conforming to standards, available in bores from Ø 16 to 32, double acting, non magnetic.

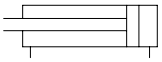

Type DUM Ø 6 ÷ 32

from page 1.18.20



Compact cylinders not conforming to standards, available in bores from Ø 16 to 32, double acting, magnetic.
The barrell with grooves allows mounting magnetic reed switches directly.

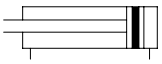

Options

Description	Symbol	Suffix
Anti-rotating plate (available from Ø 16)	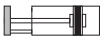	**N**
Special versions on request		**/S**

The options, when this is possible, can be combined with each other. For options matching and code key, see the tables below.

Options matching

Series	Bore	Model	Standard options matching
			N (Ø16÷32)
DU	Ø 16 ÷ 32	Standard	●
	Ø 16 ÷ 32	Anti-rotating plate (N)	
DUM	Ø 6 ÷ 32	Standard	●
	Ø 16 ÷ 32	Anti-rotating plate (N)	

Key

● allowed matching; – not allowed matching

Code key

Bore	/	Stroke	Type	Options	/	Special version
20	**/**	**30**	**DU**	**N**	**/**	

- Bore: Ø 6, 10, 16, 20, 25, 32
- Stroke: See table on page 1.18.20
- Type: DU Double acting Non Magnetic; DUM Double acting Magnetic
- Options: N
- Special version: S

How to order

Bore		Stroke	Type	Options
20	**/**	**30**	**DU**	**N**

Notes

For further information on options and their matching, see tables above.

Standard materials

Type: **DU**

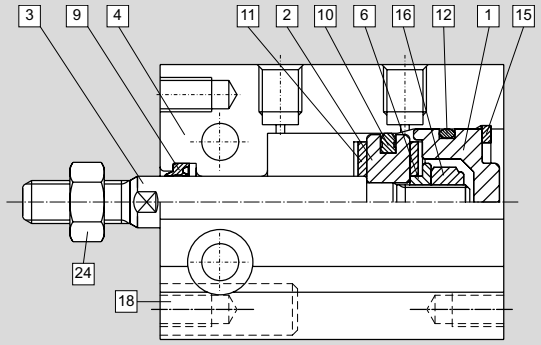

Bore: Ø **16**

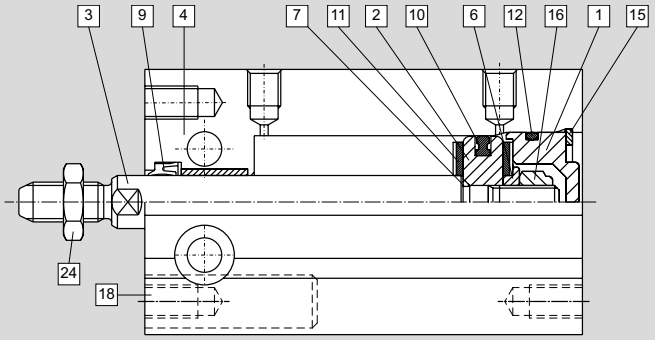

Bore: Ø **20**

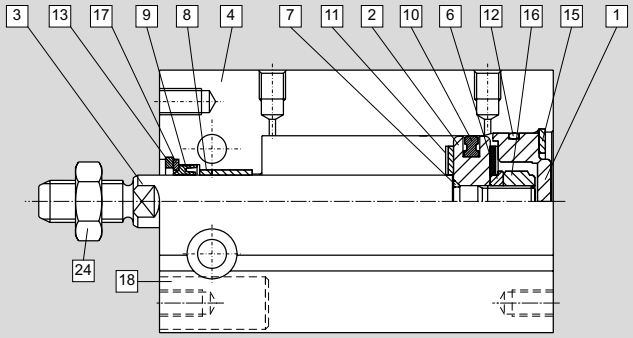

Bore: Ø **25 ÷ 32**

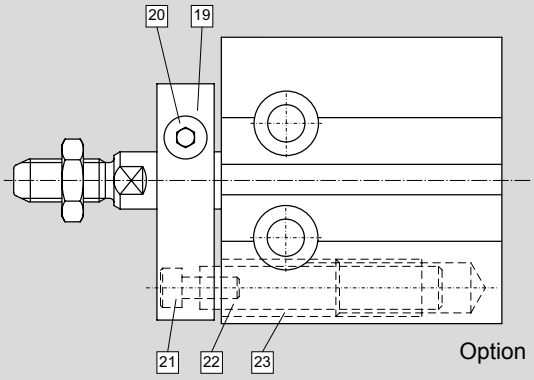

Option **N**

Position	Description	Materials					
		Ø 6	Ø 10	Ø 16	Ø 20	Ø 25	Ø 32
1	End cover	Hard anodised aluminium					
2	Piston	Brass		Hard anodised aluminium			
3	Rod	Stainless Steel			Carbon steel		
4	Tube	Hard anodised aluminium					
5	Magnet holder	Hard anodised aluminium					
6	T-washer	Nickel-plated carbon steel					
7	O-ring	NBR					
8	Oilless bearing	Oil-impregnated sintered alloy					
9	Rod packing	Polyurethane (PU)			NBR		
10	Piston seal	NBR					
11	Rubber lining	NBR					
12	Cylinder gasket	NBR					
13	Retaining ring	Nickel-plated carbon steel					
14	Magnet	Magnetic material					
15	Retaining ring	Nickel-plated carbon steel					
16	Piston nut	Galvanized carbon steel					
17	Rod washer	Stainless Steel					
18	Screw plug	Hard anodised aluminium					
19	Guide plate	Hard anodised aluminium					
20	Screw	Nickel-plated carbon steel					
21	Screw	Nickel-plated carbon steel					
22	Guide rod	Carbon steel					
23	Oilless bearing	Oil-impregnated sintered alloy					
24	Rod and nut	Stainless Steel		Nickel-plated carbon steel			

Type: **DUM**

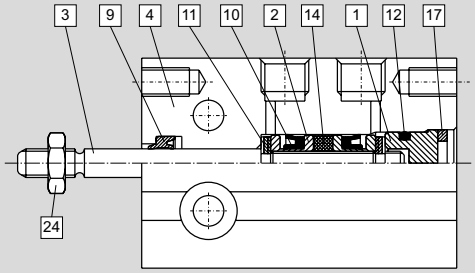

Bore: Ø **6**

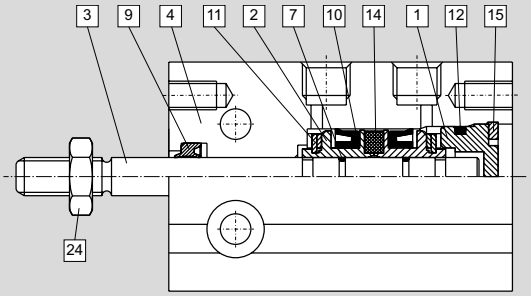

Bore: Ø **10**

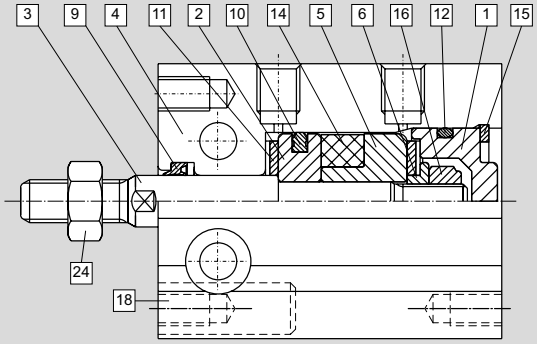

Bore: Ø **16**

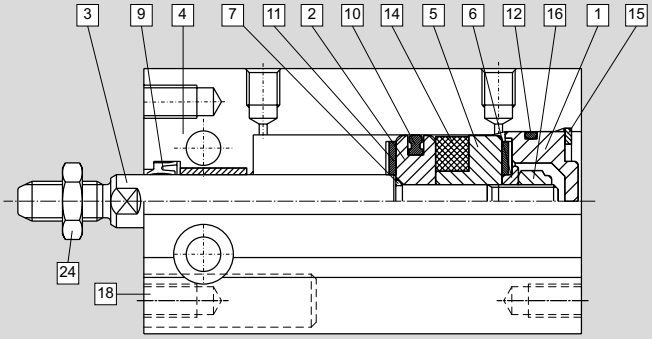

Bore: Ø **20**

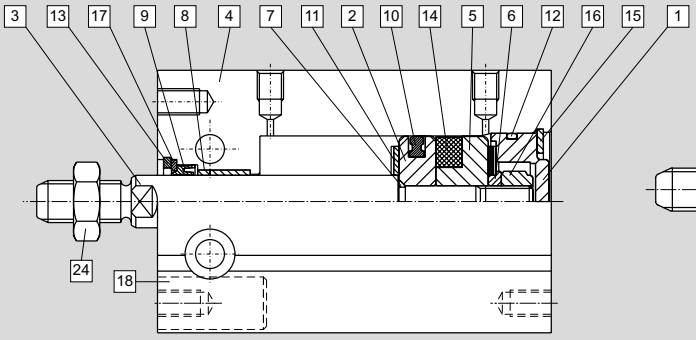

Bore: Ø **25 ÷ 32**

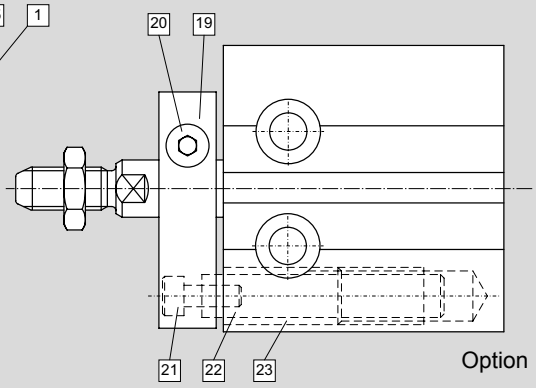

Option **N**

Accessories

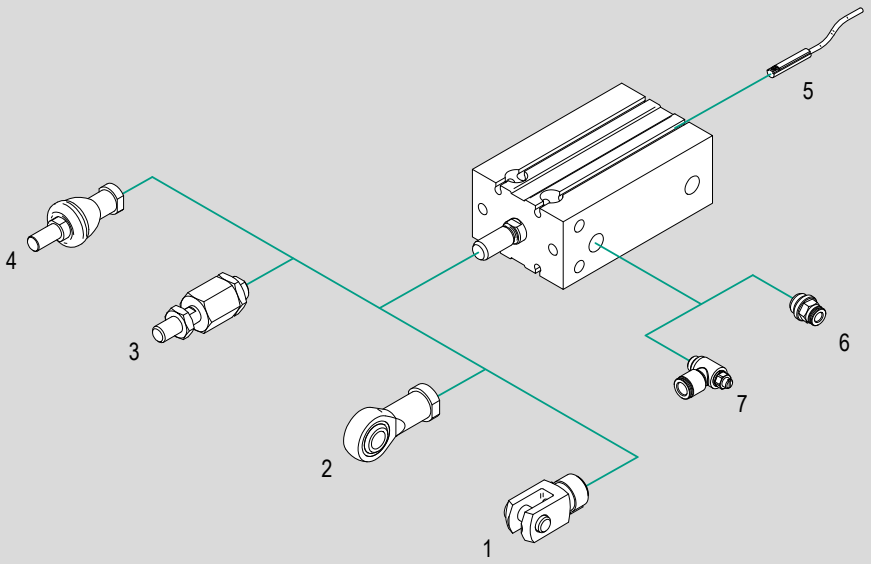

N.	Cylinder bore	Item	Description	Compliance	Matching		Code page	Data sheet page
					DU	DUM		
1	Ø 10 ÷ 32	FF..DIN	DIN female clevis with clip	DIN 71752 UNI 1676	●	●	1.18.90	1.86.1
		FFP..DIN	DIN female clevis with pin and seeger		●	●		
		FFN..DIN	DIN female clevis (body only)		●	●		1.86.2
2	Ø 20 ÷ 32	RF..SE	Bearing head (DIN 648K) with female thread	ISO 8139	●	●		1.90.1
3	Ø 10 ÷ 32	GB..	Bearing - Self-aligning articulated coupling	-	●	●		1.90.10
4	Ø 16 ÷ 32	RBI..	Bearing - Axial articulated coupling		●	●		1.90.20
	Ø 16 ÷ 25	RBL..	Bearing - Angular articulated coupling		●	●		1.90.30
5	Ø 6 ÷ 32	ASC..	Magnetic reed switch C groove		–	●		1.110.30
6	Ø 6 ÷ 32	R..	Push-in fittings		●	●	4.2.1	
7	Ø 6 ÷ 32	V..C	Flow controls, for cylinders		●	●	4.94.1	

Key
● matching accessory; – not matching accessory

Main features

16 ÷ 32
Bores Ø

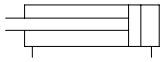

Double acting
Non magnetic

DU
Type



6 ÷ 32
Bores Ø

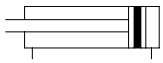

Double acting
Magnetic

DUM
Type



Technical data

Bore Ø mm		6	10	16	20	25	32
Fluid		Filtered compressed air with or without lubrication. Lubrication, if started, must be continued.					
Pressure range		3 ÷ 7 bar	1,5 ÷ 7 bar		1 ÷ 7 bar		
Temperature range		-10°C ÷ +60°C					
Port		M5					1/8"
Strokes	DU	-		5 ÷ 30 mm	5 ÷ 50 mm		
	DUM	5 ÷ 30 mm			5 ÷ 50 mm		
Rod thread	DU	-		M5	M6	M8	M10
	DUM	M3	M4	M5	M6	M8	M10

Standard strokes

Stroke mm	**DU** Bore Ø mm			
	16	20	25	32
5				
10				
15				
20				
25				
30				
40				
50				

Stroke mm	**DUM** Bore Ø mm					
	6	10	16	20	25	32
5						
10						
15						
20						
25						
30						
40						
50						

Key
Standard stroke

Standard dimensions

Type: **DU**
Ø 16 ÷ 32

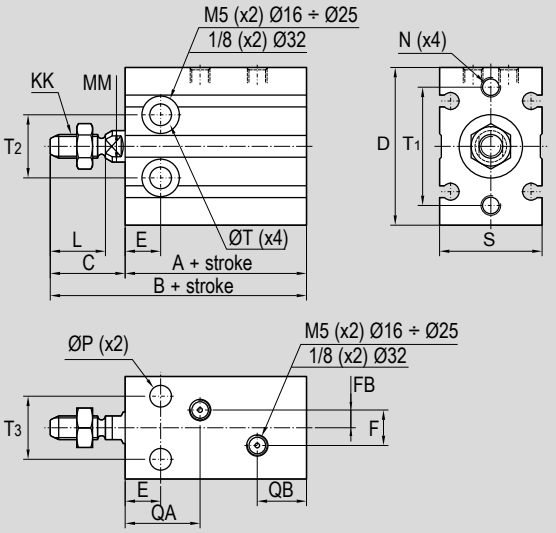

Ø (mm)	A	B	C	D	E	F	FB	L	KK	ØMM	N	ØP	QA	QB	S	T	T_1	T_2	T_3
16	30	46	16	32	7	4	2	12,5	M5	6	M4	4,3	14	11,5	20	Ø 7,6 depth 6,5	25	14	12
20	36	55	19	40	9	9	4,5	14	M6	8	M5	5,2	18	12,5	26	Ø 9 depth 7,6	30	16	16
25	40	63	23	50	10	9	4,5	18	M8	10	M5	5,5	21,5	12,5	32	Ø 9,5 depth 9	38	20	20
32	42	69	27	62	11	13,5	4,5	22	M10	12	M6	6,6	23	13	40	Ø 11 depth 11	48	24	24

Standard dimensions

Type: **DUM**
Ø 6 ÷ 10

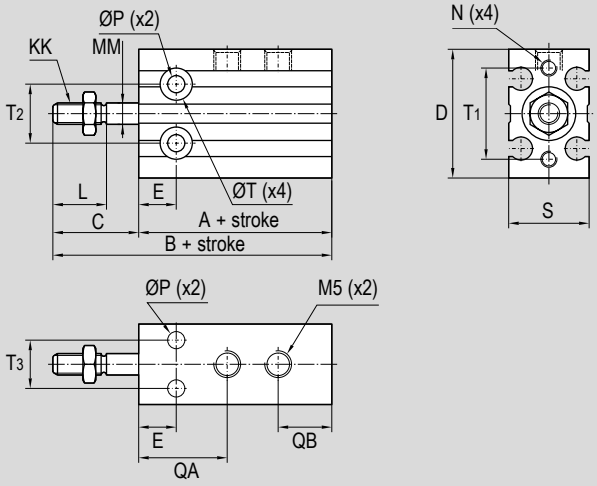

Ø (mm)	A	B	C	D	E	L	KK	ØMM	N	ØP	QA	QB	S	T	T_1	T_2	T_3
6	33	46	13	22	7	7	M3	3	M3	3,2	15	10	13	Ø 6 depth 4.8	17	10	7
10	36	52	16	24	7	10	M4	4	M3	3,2	15	11	18	Ø 6 depth 5	17	10	7

Standard dimensions

Type: **DUM**
Ø 16 ÷ 32

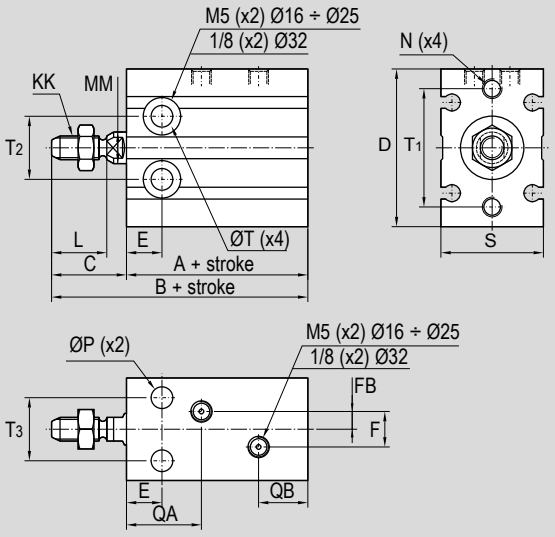

Ø (mm)	A	B	C	D	E	F	FB	L	KK	ØMM	N	ØP	QA	QB	S	T	T_1	T_2	T_3
16	40	56	16	32	7	4	2	12,5	M5	6	M4	4,3	14	11,5	20	Ø 7,6 depth 6,5	25	14	12
20	46	65	19	40	9	9	4,5	14	M6	8	M5	5,2	18	12,5	26	Ø 9 depth 7,6	30	16	16
25	50	73	23	50	10	9	4,5	18	M8	10	M5	5,5	21,5	12,5	32	Ø 9,5 depth 9	38	20	20
32	52	79	27	62	11	13,5	4,5	22	M10	12	M6	6,6	23	13	40	Ø 11 depth 11	48	24	24

Dimensions with options

Type: **...N**
Ø 16 ÷ 32

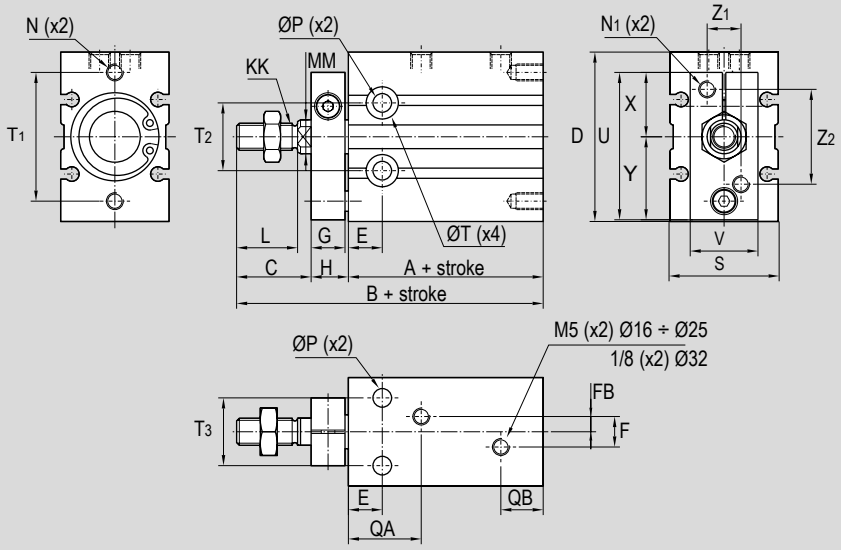

Ø (mm)	A		B		C	D	E	F	FB	G	H	L	KK	ØMM	N	N_1	ØP
	DU	DUM	DU	DUM													
16	30	40	56	66	17	32	7	4	2	8	9	12,5	M5	6	M4	M4	4,3
20	36	46	65	75	20	40	9	9	4,5	8	9	14	M6	8	M5	M4	5,2
25	40	50	73	83	22	50	10	9	4,5	10	11	18	M8	10	M5	M5	5,5
32	42	52	84	94	29	62	11	13,5	4,5	12	13	22	M10	12	M6	M5	6,5

Ø (mm)	T	T_1	T_2	T_3	QA	QB	S	U	V	X	Y	Z_1	Z_2
16	Ø 7,6 depth 6,5	25	14	12	14	11,5	20	28	13	12,5	15,5	6	18
20	Ø 9 depth 7,6	30	16	16	18	12,5	26	33	16	13,5	19,5	8	20
25	Ø 9,5 depth 9	38	20	20	21,5	12,5	32	43,5	20	19	24,5	10	28
32	Ø 11 depth 11	48	24	24	23	13	40	51,5	24	21	30,5	12	32

Female clevis with clip FF..DIN



For cylinder Ø mm	Code	Item	Compliance
6	-	-	DIN 71752 / UNI 1676
10	041001	FF04ISO/DIN	
16	041022	FF05DIN	
20	041002	FF06ISO/DIN	
25	041003	FF08ISO/DIN	
32	041025	FF10DIN	

Female clevis with pin and seeger FFP..DIN



For cylinder Ø mm	Code	Item	Compliance
6	-	-	DIN 71752 / UNI 1676
10	-	FFP04DIN	
16	-	FFP05DIN	
20	-	FFP06DIN	
25	-	FFP08DIN	
32	041096	FFP10DIN	

Female clevis (body only) FFN..DIN



For cylinder Ø mm	Code	Item	Compliance
6	-	-	DIN 71752 / UNI 1676
10	041091	FFN04DIN	
16	-	-	
20	041011	FFN06DIN	
25	041018	FFN08DIN	
32	041020	FFN10DIN	

Bearing heads (DIN 648K) with female thread RF..SE



For cylinder Ø mm	Code	Item	Compliance
6	-	-	ISO 8139
10	-	-	
16	-	-	
20	041552	RF6SE	
25	041553	RF8SE	
32	041565	RF10x1,5SE	

Self-aligning articulated coupling GB..



For cylinder Ø mm	Code	Item	Compliance
10	041701	GB008	-
16	041700	GB005	
20	041702	GB010	
25	041703	GB020	
32	041704	GB050	

Axial articulated coupling RBI..



For cylinder Ø mm	Code	Item	Compliance
16	041601	RBI5	-
20	041602	RBI6	
25	041603	RBI8	
32	041611	RBI10x1,5	

Angular articulated coupling RBL..



For cylinder Ø mm	Code	Item	Compliance
16	041651	RBL5	-
20	041652	RBL6	
25	041653	RBL8	

Magnetic reed switch C groove ASC..



For cylinder Ø mm	Code	Item	Cylinder matching
6 ÷ 32	070248	ASC1C525	DUM
	070249	ASC7N2M8	
	070382	ASC7M2M8	

Notes

SHORT STROKE
Cylinders



Find out our
key products

- **Solution for most applications**
- **Easy and intuitive choice**
- **Excellent value for money**
- **Wide availability**
- **Fast delivery**

Features and certifications

Series of short stroke cylinders, available in bores from Ø 12 to 100, single acting or double acting, magnetic or non magnetic, with female thread. Up to bore Ø 100 with extruded aluminium profile barrell allowing the direct mounting of magnetic reed switches, and built-in mounting holes.
Supplied as standard in compliance with Reach and RoHS directives, and SIL certificated. On request, they can be also supplied according to the 2014/34/EU ATEX Directive.

Type BS Ø 12 ÷ 100

from page 1.20.20



Short stroke cylinders, available in bores from Ø 12 to 100, single acting, non magnetic, with female thread.
Mounting holes are built-in the barrel.

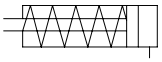

Type BSM Ø 12 ÷ 100

from page 1.20.20



Short stroke cylinders, available in bores from Ø 12 to 100, single acting, magnetic, with female thread and elastic dampers on the heads.
Barrell present built-in mounting holes and grooves allowing the mounting of magnetic reed switches (with bracket to be ordered separately).

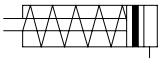

Type BD Ø 12 ÷ 100

from page 1.20.40



Short stroke cylinders, available in bores from Ø 12 to 100, double acting, non magnetic, with female thread.
Mounting holes are built-in the barrel.

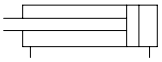

Type BDM Ø 12 ÷ 100

from page 1.20.40



Short stroke cylinders, available in bores from Ø 12 to 100, double acting, magnetic, with female thread and elastic dampers on the heads.
Barrell present built-in mounting holes and grooves allowing the mounting of magnetic reed switches (with bracket to be ordered separately).

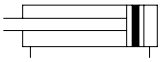

Options

Description	Symbol	Suffix
Anti-rotating plate (available only for type BDM from Ø 20 to 100)	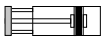	**N**
Rear spring (available only for type BS e BSM, from Ø 12 to 63)		**T**
Through rod (available from Ø 16 to 100)	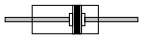	**P**
FKM seals (available from Ø 16 to 100) -20°C ÷ +150°C	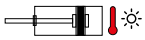	**V**
Stainless steel seeger for front head (from Ø 25 to 100)	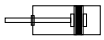	**SGX**
ATEX versions on request		**/ATEX**
Special versions on request		**/S**

The options, when this is possible, can be combined with each other. For options matching see from page 1.20.4; For code key see from page 1.20.5

Options matching

Series	Bore	Model	Standard options matching					
			N (Ø20÷100)	**T** (Ø12÷63)	**P** (Ø16÷100)	**V** (Ø16÷100)	**SGX** (Ø25÷100)	**/ATEX**
BS-BSM	Ø 12 ÷ 100	Standard	-	●	-	●	●	●
	Ø 12 ÷ 63	Rear spring (T)	-		-	●	●	●
BD	Ø 12 ÷ 100	Standard	●	-	●	●	●	●
	Ø 16 ÷ 100	Through rod (P)	●	-		●	●	●
BDM	Ø 12 ÷ 100	Standard	●	-	●	●	●	●
	Ø 20 ÷ 100	Anti-rotating plate (N)		-	●	●	●	●
	Ø 16 ÷ 100	Through rod (P)	●	-		●	●	●

Key

● allowed matching; - not allowed matching

Standard materials

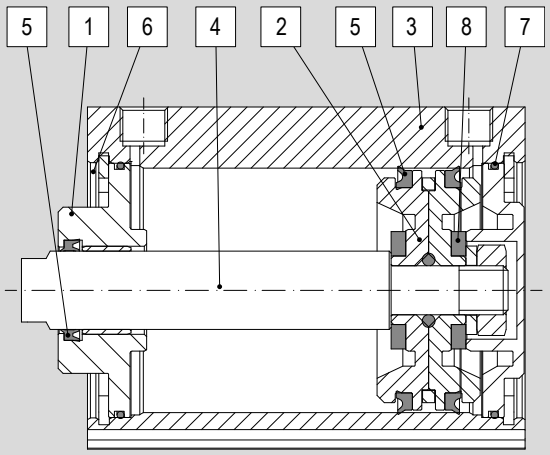

Position	Description		Materials									
			Ø 12	Ø 16	Ø 20	Ø 25	Ø 32	Ø 40	Ø 50	Ø 63	Ø 80	Ø 100
1	End cover		Brass				Aluminium					
2	Semi-piston	Magnetic	Acetalic resin (POM)								Aluminium	
		Non magnetic	Acetalic resin (POM)					Aluminium				
3	Tube		Anodised aluminium									
4	Rod		Stainless Steel AISI 303									
5	Rod seal		Polyurethane (PU)									
6	Seeger		Steel									
7	Seals		NBR									
8	Elastic dampers		NBR									

Code key

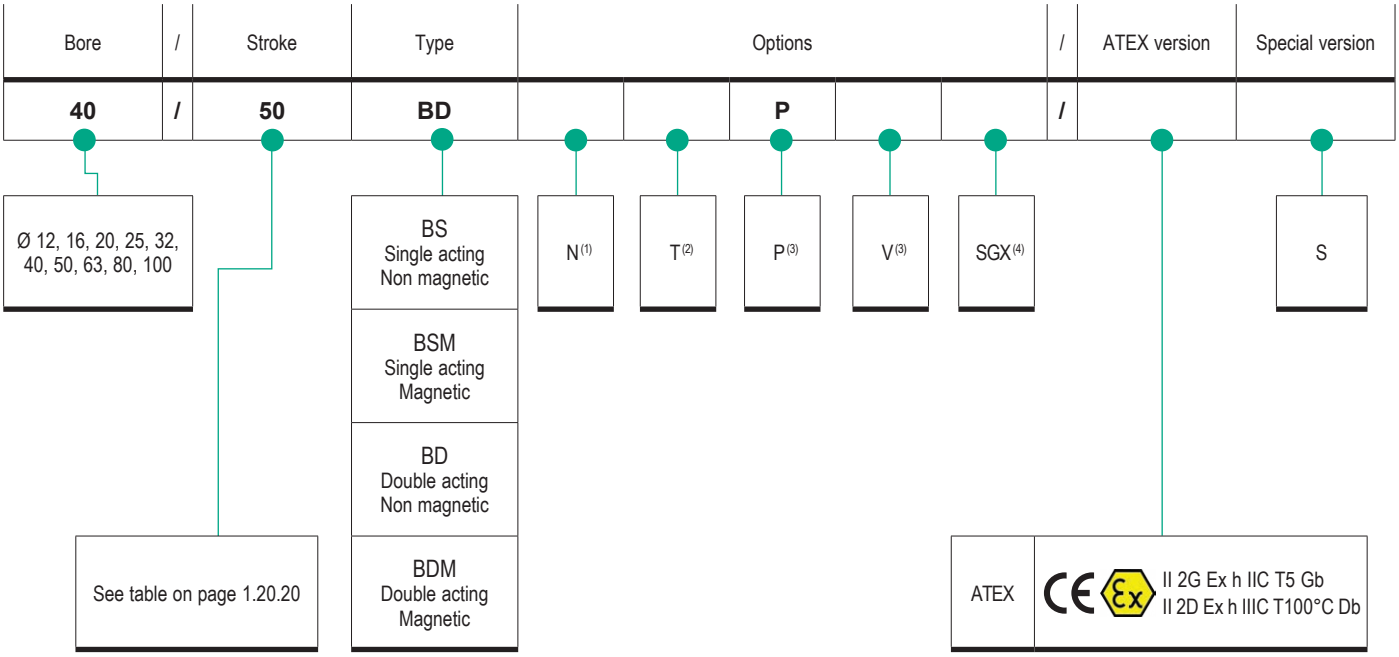

How to order

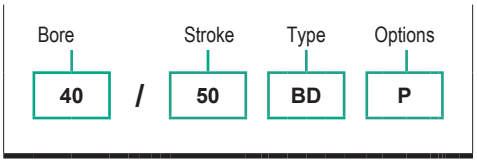

Notes

Options in the same grid are alternative to each others.

For further information on options and their matching, see page 1.20.3 and page 1.20.4

(1) Available only for types BD and BDM from Ø 25 to 100

(2) Available only for types BS and BSM from Ø 12 to 63

(3) Available from Ø 16 to 100

(4) Available from Ø 25 to 100

For further information on the ATEX 2014/34/EU Directive, on classifications and protections, see from page III.1

Seal kit standard*

Number of components	Description
n. 1	Rod seal
n. 2	Barrell o-ring
n. 1	Semipiston o-ring
n. 2	Piston seal
n. 2	Elastic dampers

*For cylinders with options P or V, the kit include further components.

Standard seal kit code key

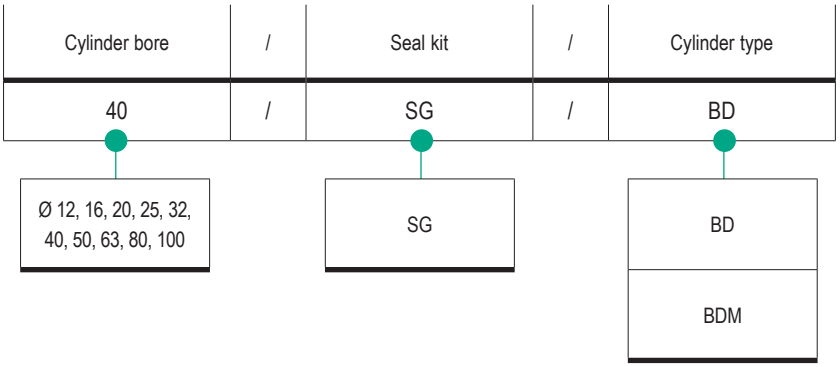

Accessories

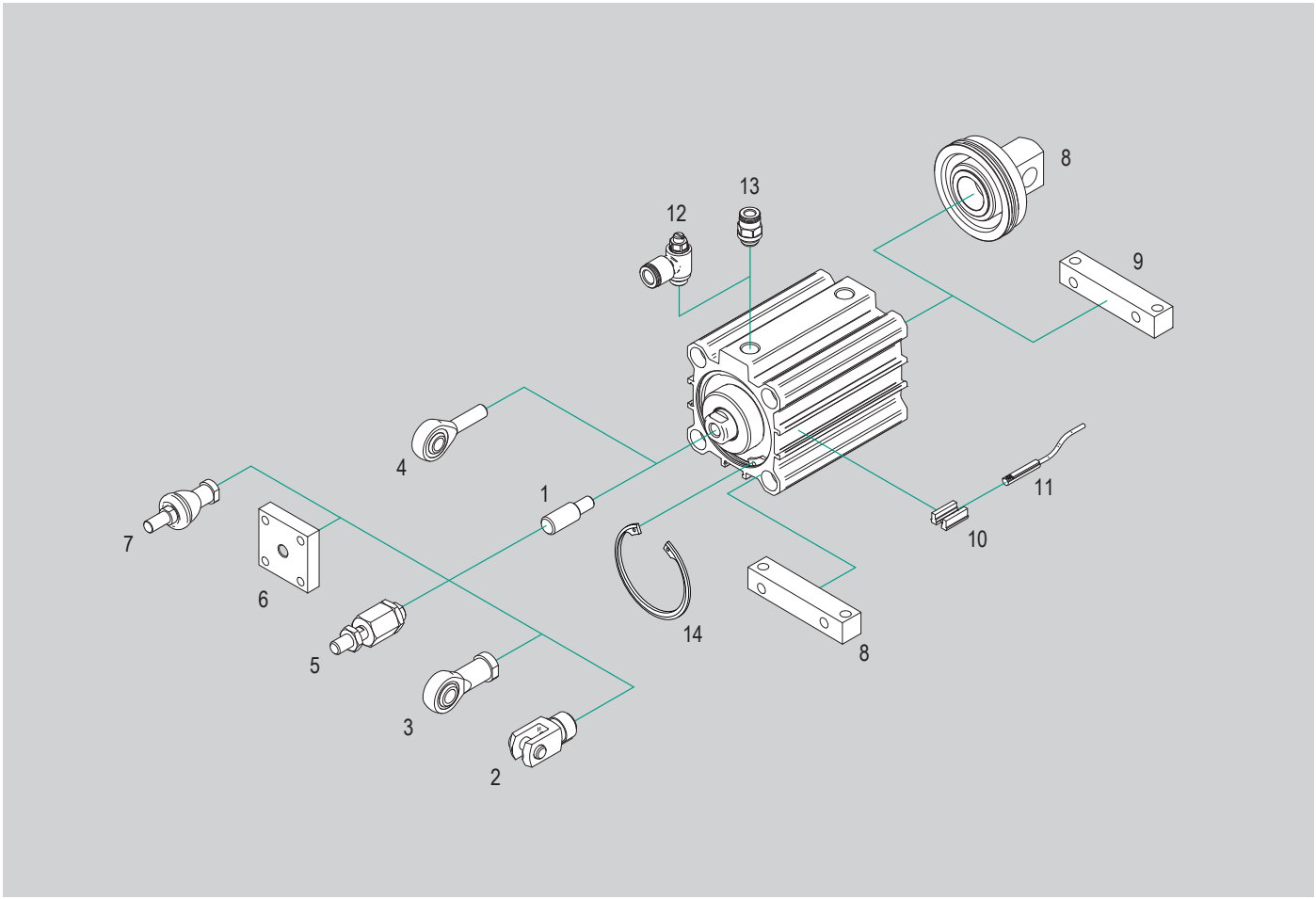

N.	Cylinder bore	Item	Description	Compliance	Matching		Code page	Data sheet page
					BS-BD	BSM-BDM		
1	Ø 12 ÷ 100	N..AQB	Rod nipple	-	●	●	1.20.90	1.90.60
2	Ø 12 ÷ 100	FF..ISO	ISO female clevis with clip	ISO 8140	●(1)	●(1)		1.85.10
	Ø 32 ÷ 100	FFP..ISO	ISO female clevis with pin and seeger		●(1)	●(1)		
	Ø 12 ÷ 100	FFN..ISO	ISO female clevis (body only)		●(1)	●(1)		1.85.11
3	Ø 12 ÷ 100	RF..SE	Bearing head (DIN 648K) with female thread	ISO 8139	●(1)	●(1)		1.90.1
4	Ø 16 ÷ 63	RM..SE	Bearing head (DIN 648K) with male thread	ISO 8139	●	●		1.90.2
	Ø 80 ÷ 100			DIN	●	●		
5	Ø 12 ÷ 100	GB..	Bearing - Self-aligning articulated coupling	-	●(1)	●(1)	1.20.91	1.90.10
6	Ø 32 ÷ 100	GC..	Self-aligning coupling		●(1)	●(1)		1.90.40
7	Ø 12 ÷ 100	RBI..	Bearing - Axial articulated coupling		●(1)	●(1)	1.20.90	1.90.20
		RBL..	Bearing - Angular articulated coupling		●(1)	●(1)		1.90.30
8	Ø 16 ÷ 100	CM..ALB	Back head with integrated rear eye		●(2)	●(2)	1.20.91	1.100.201
9	Ø 16 ÷ 100	P..ALB	High foot		●	●		1.100.200
10	Ø 12 ÷ 100	AS108	Bracket for reed switches type "T"		-	●		1.120.2
11	Ø 12 ÷ 100	ASV..	Magnetic reed switch T groove		-	●		1.110.10
		MK..	ATEX magnetic reed switch T groove	2014/34/EU	-	●		1.113.1
12	Ø 12 ÷ 100	R..	Push-in fittings	-	●	●	4.2.1	
13	Ø 12 ÷ 100	V..C	Flow controls, for cylinders		●	●	4.94.1	
14	Ø 25 ÷ 100	SGX..	Stainless steel seeger for front head		●	●	1.20.91	-

Key
● matching accessory; - not matching accessory

(1) Matching only with rod nipple N..AQB mounted
(2) Accessory to be ordered with the cylinder

Main features

12 ÷ 100
Bores Ø

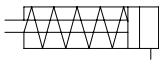

Single acting
Non magnetic
With female thread

BS
Type



12 ÷ 100
Bores Ø

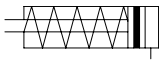

Single acting
Magnetic
With female thread

BSM
Type



Technical data

Bore Ø mm	12	16	20	25	32	40	50	63	80	100
Fluid	Filtered compressed air with or without lubrication. Lubrication, if started, must be continued.									
Pressure range	2 ÷ 10 bar									
Temperature range	-20°C ÷ +80°C (standard)			-20°C ÷ +150°C (V)						
Port	M5			1/8"					1/4"	
Thrust force (N)	51	106	170	258	441	729	1070	1720	2880	4400
Spring traction force (N)	5	6		13	18	20	40	49	76	131
Strokes*	5 ÷ 25 mm				5 ÷ 50 mm					
Rod thread	M3	M4	M5		M6		M8		M10	M12

*In case of intermediate strokes from the standard strokes (see table below), the cylinder body will have the overall dimensions of the cylinder with the next standard stroke, as desired stroke is obtained by applying a spacer.

Standard strokes

Stroke mm	**BS** Bore Ø mm									
	12	16	20	25	32	40	50	63	80	100
5										
10										
15										
20										
25										
30										
40										
50										

Stroke mm	**BSM** Bore Ø mm									
	12	16	20	25	32	40	50	63	80	100
5										
10										
15										
20										
25										
30										
40										
50										

Key
Standard stroke

Standard dimensions

Type: **BS, BSM**
Ø 12

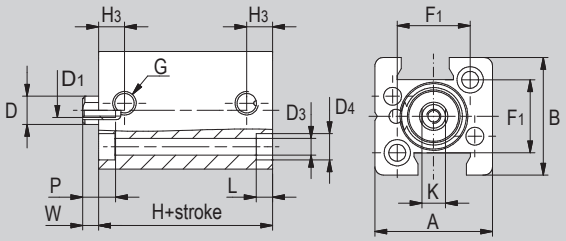

Type: **BS, BSM**
Ø 16 ÷ 25

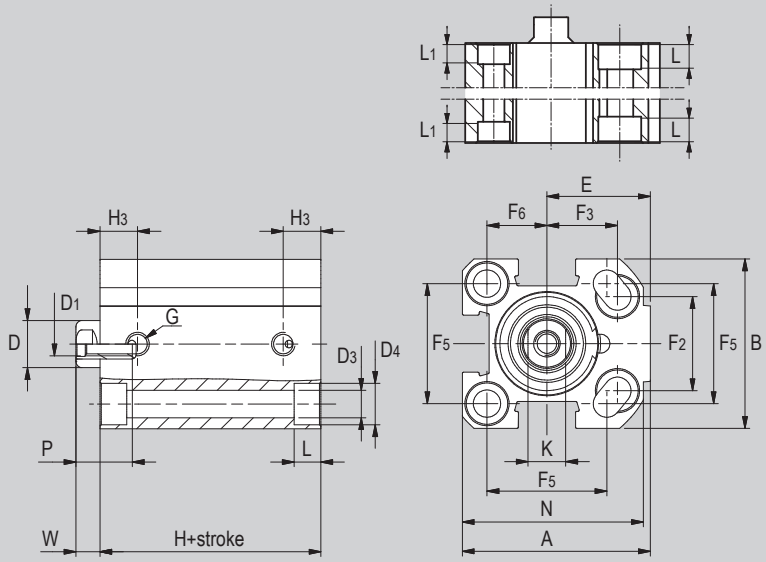

Type: **BS, BSM**
Ø 32 ÷ 100

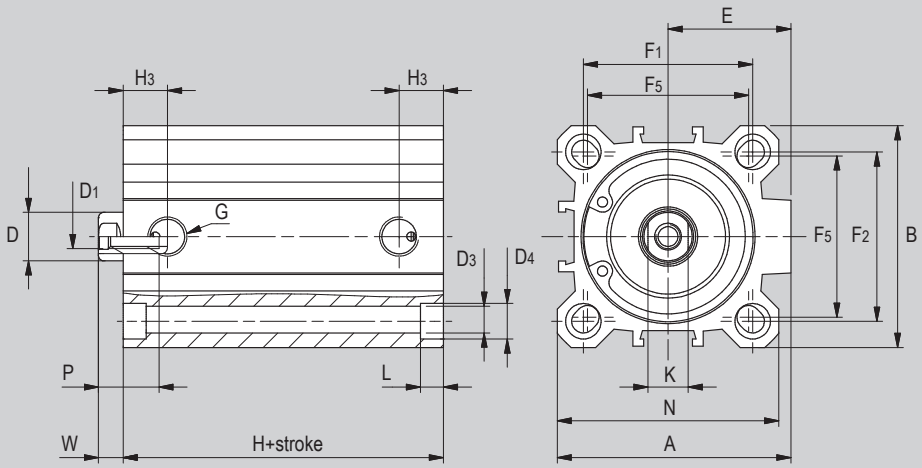

Ø (mm)	A	B	ØD	D_1	$ØD_3$	$ØD_4$	E	G	H		H_3	F_1	F_2	F_3	F_5	F_6	K	L	L_1	N	P	W
									type BS	type BSM												
12	25	25	6	M3	3,7	5,6	-	M5	17(1)	27	5,5	15,5	-	-	-	-	5	3,5	-	-	7	3,5
16	34	30	8	M4	4,7	7,5	19	M5	27	32(3)	8	-	18	12	20	10	6	4,6	3,5	32	11	4,5
20	40	36	10	M5	5,8	9	22	M5	27	32(3)	8	-	20	15	25,5	12,7	8	5,7	5,7	38,5	12	5
25	44,5	40	10	M5	5,8	9	24,5	1/8"	28,5	38,5(4)	10,5(6)	-	26	15,5	28	14	8	5,7	5,7	42	12	5,5
32	51	46	12	M6	5,8	9	27	1/8"	29,5(2)	39,5(5)	11,5(7)	36	32	-	34	-	10	5,7	-	48	15	6
40	58	55	12	M6	5,8	9	30,5	1/8"	29,5(2)	39,5(5)	11(7)	42	42	-	40	-	10	5,7	-	55	15	6
50	70	65	16	M8	6,8	11	37,5	1/8"	34,5(2)	39,5(5)	11,5	50	50	-	50	-	13	6,8	-	65	17	7,5
63	89	80	16	M8	9	14	46	1/8"	37(2)	42(3)	11	62	62	-	60	-	13	8,8	-	80	17	7
80	105	100	20	M10	9	14	55	1/4"	46(2)	46(3)	14	82	82	-	77	-	17	9	-	100	17	8
100	131	124	25	M12	11	17,2	69	1/4"	56(2)	56(3)	16	103	103	-	94	-	22	11	-	124	22	10

(1) For strokes 15, 20 and 25 mm, add +5 mm to dimension; **(2)** For strokes 40 and 50 mm, add +10 mm to dimension; **(3)** For stroke 25 mm, add +6 mm to dimension; **(4)** For strokes 25 mm, add +1 mm to dimension; **(5)** For strokes 40 and 50 mm, add +10 mm to dimension; **(6)** If quote H is less than 38,5 the dimension is 8,5; **(7)** If quote H is less than 39,5 the dimension is 8.

Dimensions with options

Type: **...T**
Ø 12

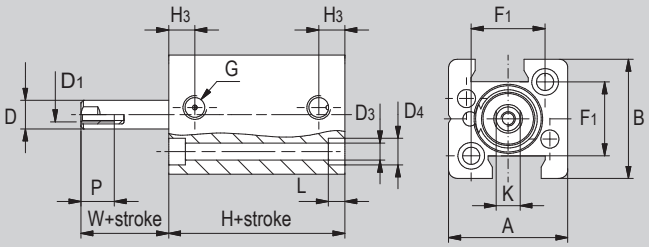

Type: **...T**
Ø 16 ÷ 25

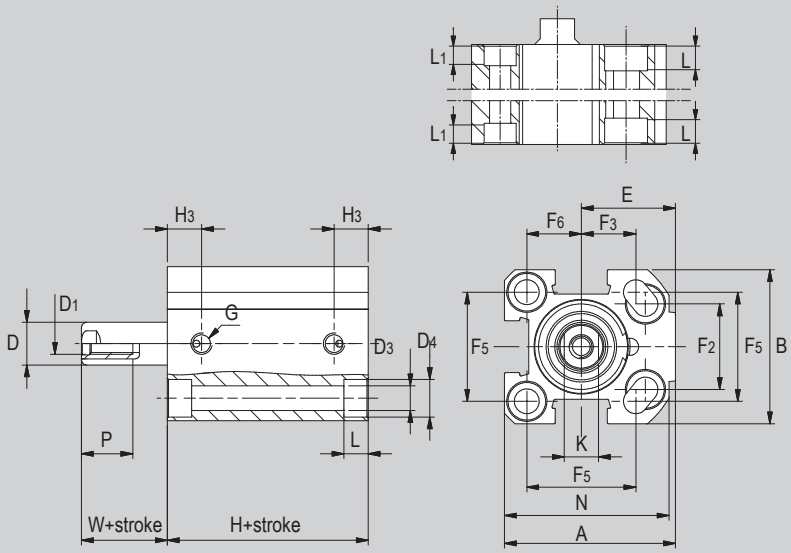

Type: **...T**
Ø 32 ÷ 63

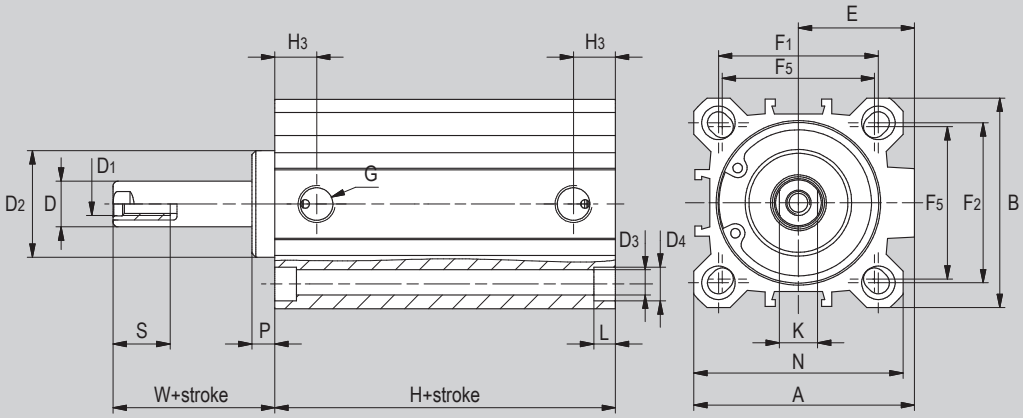

Ø (mm)	A	B	ØD	D_1	$ØD_2$	$ØD_3$	$ØD_4$	E	G	H	H_3	F_1	F_2	F_3	F_5	F_6	K	L	L_1	N	P	S	W
12	25	25	6	M3	-	3,7	5,6	-	M5	17(1)	5,5	15,5	-	-	-	-	5	3,5	-	-	7	-	3,5
16	34	30	8	M4	-	4,7	7,5	19	M5	32(2)	8	-	18	12	20	10	6	4,6	3,5	32	11	-	4,5
20	40	36	10	M5	-	5,8	9	22	M5	32(2)	8	-	20	15	25,5	12,7	8	5,7	5,7	38,5	12	-	4,5
25	44,5	40	10	M5	-	5,8	9	24,5	1/8"	38,5(3)	10,5	-	26	15,5	28	14	8	5,7	5,7	42	12	-	5,5
32	51	46	12	M6	24,5	5,8	9	27	1/8"	39,5(4)	11,5	36	32	-	34	-	10	5,7	-	48	15	5	11
40	58	55	12	M6	28	5,8	9	30,5	1/8"	39,5	11	42	42	-	40	-	10	5,7	-	55	15	6	12,5
50	70	65	16	M8	34	6,8	11	37,5	1/8"	39,5	11,5	50	50	-	50	-	13	6,8	-	65	17	6	13,5
63	89	80	16	M8	38,5	9	14	46	1/8"	42	11	62	62	-	60	-	13	8,8	-	80	17	8	15

(1) For BS type the dimension is 17, for BSM type the dimension is 27; **(2)** For strokes 20 and 25 mm, add +11 mm to dimension; **(3)** For strokes 20 and 25 mm, add +6 mm to dimension; **(4)** For strokes 20 and 25 mm, add +5 mm to dimension, while for stroke 30 mm add +10 mm to dimension.

Short Stroke Cylinders
Series BD - BDM

Main features

12 ÷ 100
Bores Ø

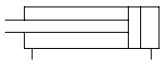

Double acting
Non magnetic
With female thread

BD
Type



12 ÷ 100
Bores Ø

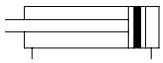

Double acting
Magnetic
With female thread

BDM
Type



Technical data

Bore Ø mm		12	16	20	25	32	40	50	63	80	100
Fluid		Filtered compressed air with or without lubrication. Lubrication, if started, must be continued.									
Pressure range		2 ÷ 10 bar									
Temperature range		-20°C ÷ +80°C (standard)			-20°C ÷ +150°C (V)						
Port		M5			1/8"					1/4"	
Strokes*	BD	5 ÷ 40 mm	5 ÷ 50 mm			5 ÷ 100 mm		10 ÷ 100 mm			
	BDM	5 ÷ 40 mm	5 ÷ 100 mm	5 ÷ 125 mm		5 ÷ 160 mm		10 ÷ 200 mm		10 ÷ 250 mm	
	..N	-		5 ÷ 125 mm				10 ÷ 125 mm	10 ÷ 160 mm		
Rod thread		M3	M4	M5		M6		M8		M10	M12

*In case of intermediate strokes from the standard strokes (see table below), the cylinder body will have the overall dimensions of the cylinder with the next standard stroke, as desired stroke is obtained by applying a spacer.

Standard strokes

BD
Bore Ø mm

Stroke mm	12	16	20	25	32	40	50	63	80	100
5	●	●	●	●	●	●				
10	●	●	●	●	●	●	●	●		
15	●	●	●	●	●	●	●	●		
20	●	●	●	●	●	●	●	●		
25	●	●	●	●	●	●	●	●		
30	●	●	●	●	●	●	●	●		
40	●	●	●	●	●	●	●	●		
50			●	●	●	●	●	●		
60										
80										
100										

BDM
Bore Ø mm

Stroke mm	12	16	20	25	32	40	50	63	80	100
5	●	●	●	●	●	●				
10	●	●	●	●	●	●	●	●		
15	●	●	●	●	●	●	●	●		
20	●	●	●	●	●	●	●	●		
25	●	●	●	●	●	●	●	●		
30	●	●	●	●	●	●	●	●		
40	●	●	●	●	●	●	●	●		
50			●	●	●	●	●	●		
60										
80										
100										
125										
160										
200										
250										

..N
Bore Ø mm

Stroke mm	20	25	32	40	50	63	80	100
5								
10								
15								
20								
25								
30								
40								
50								
60								
80								
100								
125								
160								

Key
Standard stroke

Standard dimensions

Type: **BD**
Ø 12

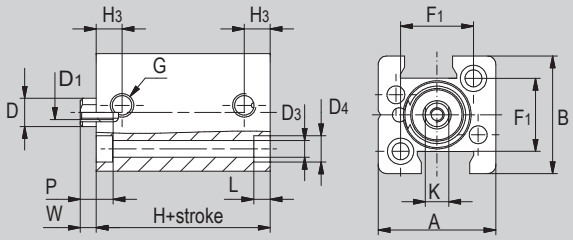

Type: **BD**
Ø 16 ÷ 25

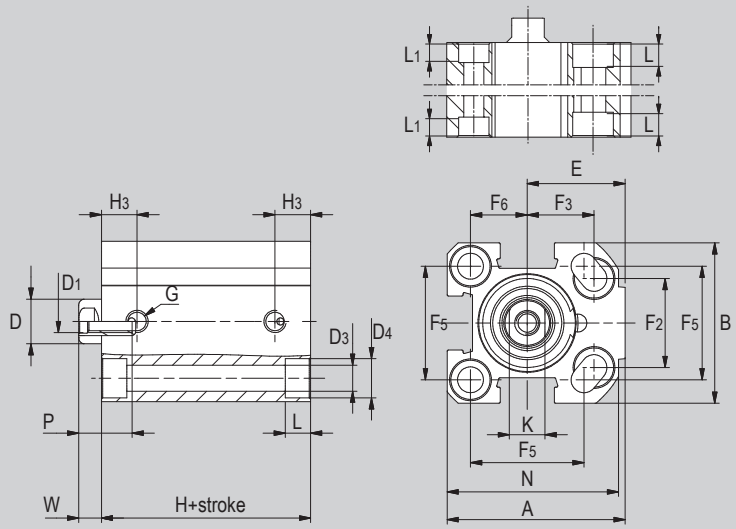

Type: **BD**
Ø 32 ÷ 100

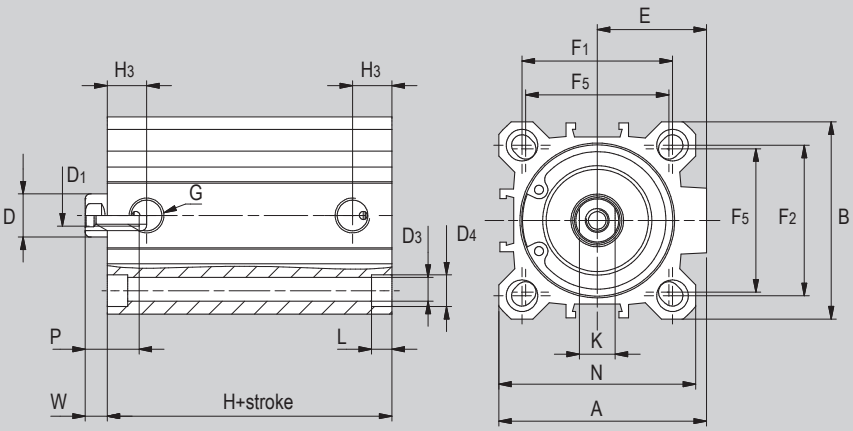

Ø (mm)	A	B	ØD	D_1	$ØD_3$	$ØD_4$	E	G	H	H_3	F_1	F_2	F_3	F_5	F_6	K	L	L_1	N	P	W
12	25	25	6	M3	3,7	5,6	-	M5	17	5,5	15,5	-	-	-	-	5	3,5	-	-	7	3,5
16	34	30	8	M4	4,7	7,5	19	M5	27(1)	8	-	18	12	20	10	6	4,6	3,5	32	11	4,5
20	40	36	10	M5	5,8	9	22	M5	27(1)	8	-	20	15	25,5	12,7	8	5,7	5,7	38,5	12	5
25	44,5	40	10	M5	5,8	9	24,5	1/8"	28,5(2)	10,5(3)	-	26	15,5	28	14	8	5,7	5,7	42	12	5,5
32	51	46	12	M6	5,8	9	27	1/8"	29,5	11,5(4)	36	32	-	34	-	10	5,7	-	48	15	6
40	58	55	12	M6	5,8	9	30,5	1/8"	29,5	11(4)	42	42	-	40	-	10	5,7	-	55	15	6
50	70	65	16	M8	6,8	11	37,5	1/8"	34,5	11,5	50	50	-	50	-	13	6,8	-	65	17	7,5
63	89	80	16	M8	9	14	46	1/8"	37	11	62	62	-	60	-	13	8,8	-	80	17	7
80	105	100	20	M10	9	14	55	1/4"	46	14	82	82	-	77	-	17	9	-	100	17	8
100	131	124	25	M12	11	17,2	69	1/4"	56	16	103	103	-	94	-	22	11	-	124	22	10

(1) For strokes 30, 40 and 50 mm, add +1 mm to dimension; **(2)** For strokes 40 and 50 mm, add +1 mm to dimension; **(3)** If quote H is less than 38,5 the dimension is 8,5; **(4)** If quote H is less than 39,5 the dimension is 8

Standard dimensions

Type: **BDM**
Ø 12

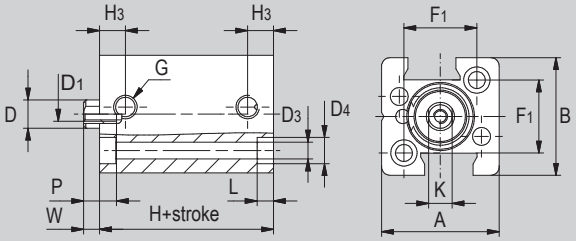

Type: **BDM**
Ø 16 ÷ 25

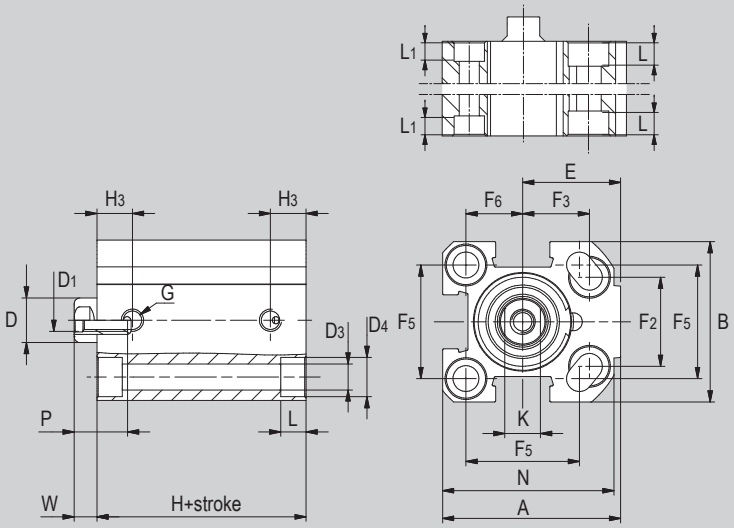

Type: **BDM**
Ø 32 ÷ 100

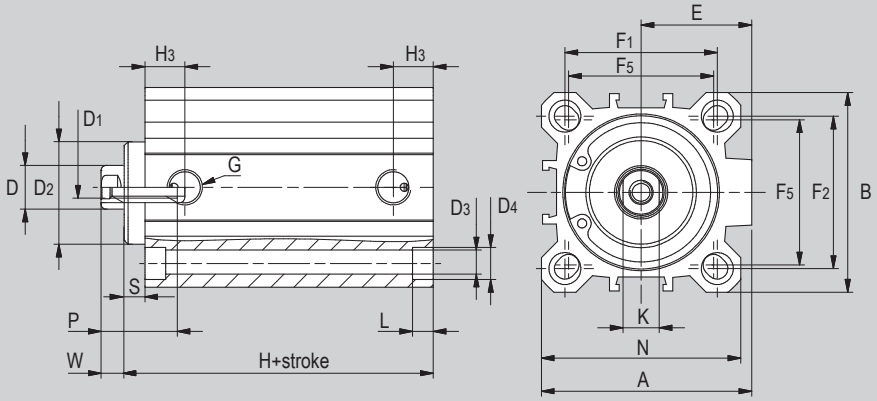

Ø (mm)	A	B	ØD	D_1	$ØD_2$	$ØD_3$	$ØD_4$	E	G	H	H_3	F_1	F_2	F_3	F_5	F_6	K	L	L_1	N	P	S	W
12	25	25	6	M3	-	3,7	5,6	-	M5	27	5,5	15,5	-	-	-	-	5	3,5	-	-	7	-	3,5
16	34	30	8	M4	-	4,7	7,5	19	M5	32(1)	8	-	18	12	20	10	6	4,6	3,5	32	11	-	4,5
20	40	36	10	M5	-	5,8	9	22	M5	32(1)	8	-	20	15	25,5	12,7	8	5,7	5,7	38,5	12	-	5
25	44,5	40	10	M5	-	5,8	9	24,5	1/8"	38,5(2)	10,5	-	26	15,5	28	14	8	5,7	5,7	42	12	-	5,5
32	51	46	12	M6	24.5	5,8	9	27	1/8"	39,5	11,5	36	32	-	34	-	10	5,7	-	48	15	5	6
40	58	55	12	M6	28	5,8	9	30,5	1/8"	39,5	11(4)	42	42	-	40	-	10	5,7	-	55	15	6	6,5
50	70	65	16	M8	34	6,8	11	37,5	1/8"	39,5	11,5	50	50	-	50	-	13	6,8	-	65	17	6	7,5
63	89	80	16	M8	38.5	9	14	46	1/8"	42	11	62	62	-	60	-	13	8,8	-	80	17	8	7
80	105	100	20	M10	44	9	14	55	1/4"	46	14	82	82	-	77	-	17	9	-	100	17	10	8
100	131	124	25	M12	56	11	17,2	69	1/4"	56	16	103	103	-	94	-	22	11	-	124	22	10,5	10

(1) For strokes ≥ 25 mm, add +6 mm to dimension; **(2)** For strokes ≥ 25 mm, add +1 mm to dimension.

Dimensions with options

Type: **...N**
Ø 20 ÷ 25

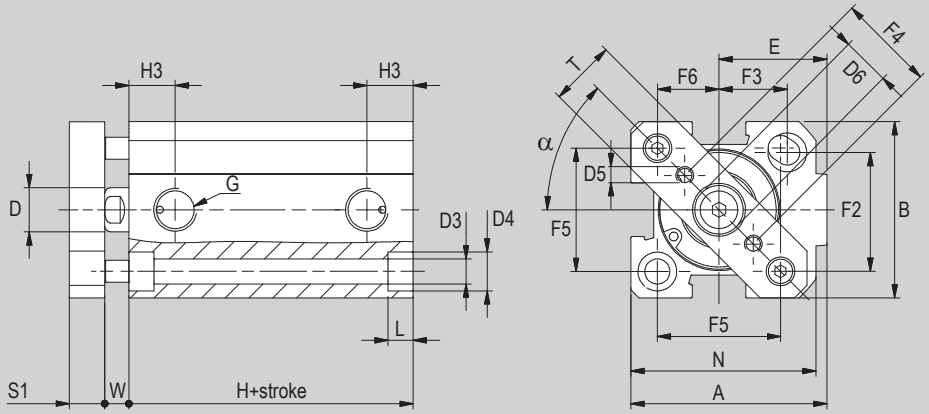

Type: **...N**
Ø 32 ÷ 100

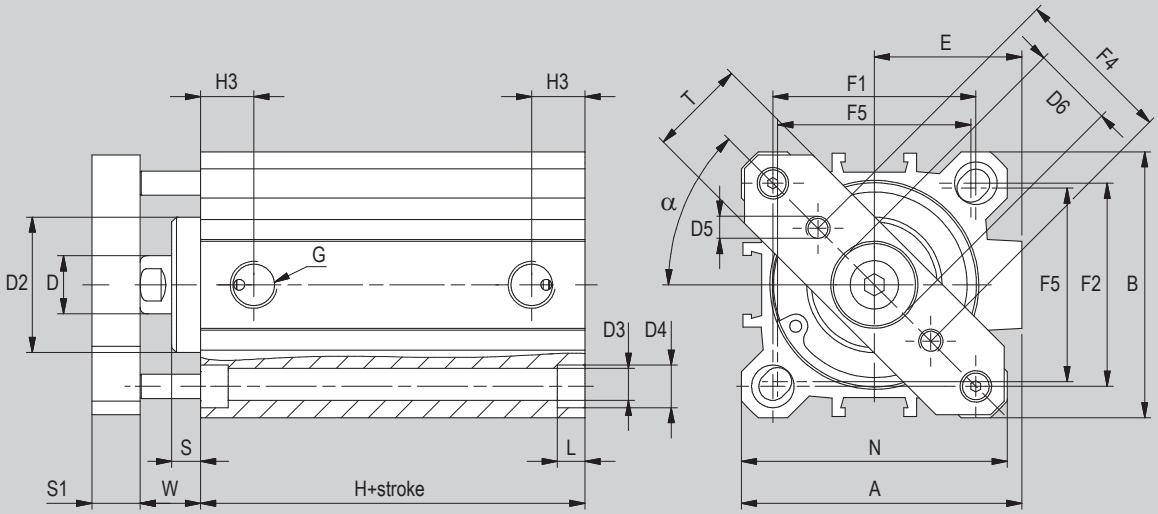

Ø (mm)	A	B	α	ØD	ØD$_2$	ØD$_3$	ØD$_4$	D$_5$	ØD$_6$	E	G	H	H$_3$	F$_1$	F$_2$	F$_3$	F$_4$	F$_5$	F$_6$	K	L	L$_1$	N	S	S$_1$	T	W
20	40	36	45°	10	-	5,8	9	M4	11	22	M5	32(1)	8	-	20	15	20	25,5	12,7	8	5,7	5,7	38,5	-	8	15	4,5
25	44,5	40	45°	10	-	5,8	9	M4	11	24,5	1/8”	38,5(2)	10,5	-	26	15,5	22	28	14	8	5,7	5,7	42	-	8	15	5,5
32	51	46	41,5°	12	24,5	5,8	9	M5	17	27	1/8”	39,5	11,5	36	32	-	28	34	-	10	5,7	-	48	5	10	20	11
40	58	55	45°	12	28	5,8	9	M5	17	30,5	1/8”	39,5	11	42	42	-	33	40	-	10	5,7	-	55	6	10	20	12,5
50	70	65	45°	16	34	6,8	11	M6	22	37,5	1/8”	39,5	11,5	50	50	-	42	50	-	13	6,8	-	65	6	12	30	13,5
63	89	80	45°	16	38,5	9	14	M6	22	46	1/8”	42	11	62	62	-	50	60	-	13	8,8	-	80	8	12	30	15
80	105	100	45°	20	44	9	14	M8	28	56	1/4”	46	14	82	82	-	65	77	-	17	9	-	100	10	14	50	18
100	131	124	45°	25	56	11	17,2	M10	30	69	1/4”	56	16	103	103	-	80	94	-	22	11	-	124	10,5	14	50	20,5

(1) For strokes ≥ 25 mm, add +6 mm to dimension; **(2)** For strokes ≥ 25 mm, add +1 mm to dimension.

Dimensions with options

Type: **...P**
Ø 16 ÷ 25

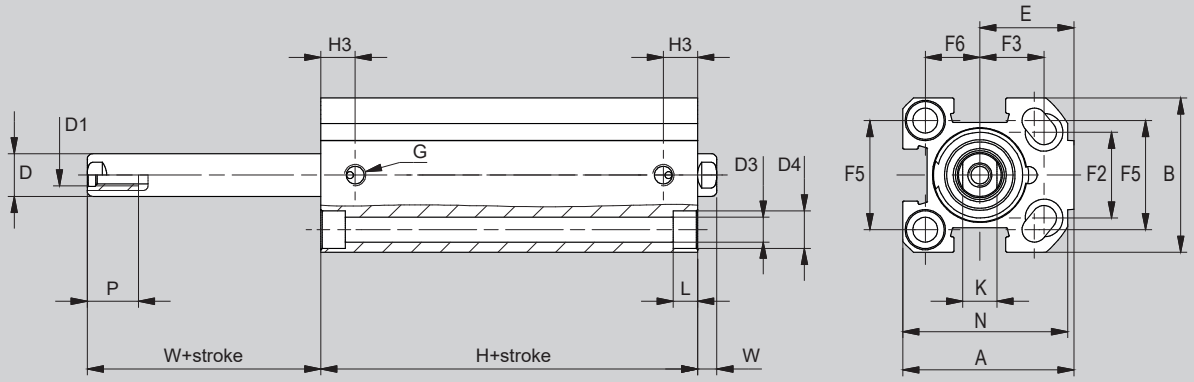

Type: **...P**
Ø 32 ÷ 100

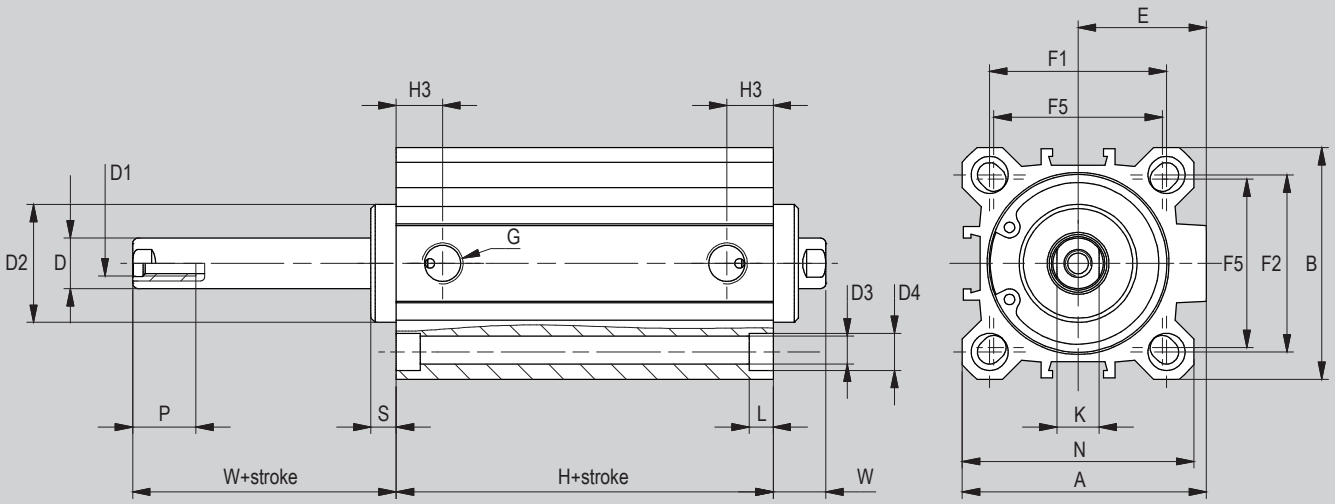

Ø (mm)	A	B	ØD	D_1	$ØD_2$	$ØD_3$	$ØD_4$	E	G	H	H_3	F_1	F_2	F_3	F_5	F_6	K	L	L_1	N	P	S	W
16	34	30	8	M4	-	4,7	7,5	19	M5	32(1)	8	-	18	12	20	10	6	4,6	3,5	32	11	-	4,5
20	40	36	10	M5	-	5,8	9	22	M5	32(1)	8	-	20	15	25,5	12,7	8	5,7	5,7	38,5	12	-	4,5
25	44,5	40	10	M5	-	5,8	9	24,5	1/8"	38,5(2)	10,5	-	26	15,5	28	14	8	5,7	5,7	42	12	-	5,5
32	51	46	12	M6	24.5	5,8	9	27	1/8"	39,5	11,5	36	32	-	34	-	10	5,7	-	48	15	5	11
40	58	55	12	M6	28	5,8	9	30,5	1/8"	39,5	11	42	42	-	40	-	10	5,7	-	55	15	6	12,5
50	70	65	16	M8	34	6,8	11	37,5	1/8"	39,5	11,5	50	50	-	50	-	13	6,8	-	65	17	6	13,5
63	89	80	16	M8	38.5	9	14	46	1/8"	42	11	62	62	-	60	-	13	8,8	-	80	17	8	15
80	105	100	20	M10	44	9	14	55	1/4"	46	14	82	82	-	77	-	17	9	-	100	17	10	18
100	131	124	25	M12	56	11	17,2	69	1/4"	56	16	103	103	-	94	-	22	11	-	124	22	10,5	20,5

(1) For strokes ≥ 25 mm, add +6 mm to dimension; **(2)** For strokes ≥ 25 mm, add +1 mm to dimension.

Rod nipple N..AQB



For cylinder Ø mm	Code	Item	Filetto 1	Filetto 2
12	040079	N6-3AQB	M6x1	M3x0,5
16	040080	N6-4AQB	M6x1	M4x0,7
20-25	040081	N8-5AQB	M8x1,25	M5x0,8
32-40	040082	N10-6AQB	M10x1,25	M6x1
50-63	040083	N12-8AQB	M12x1,25	M8x1,25
50-63	040084	N16-8AQB	M16x1,5	M8x1,25
80	040085	N16-10AQB	M16x1,5	M10x1,5
100	040086	N20-12AQB	M20x1,5	M12x1,75

Female clevis* with clip FF..ISO



For cylinder Ø mm	Code	Item	Compliance
12-16	041002	FF06ISO/DIN	ISO 8140
20-25	041003	FF08ISO/DIN	
32-40	041004	FF10ISO	
50-63	041005	FF12ISO	
50-63-80	041006	FF16ISO	
100	041007	FF20ISO	

*Matching only with rod nipple N..AQB mounted

Female clevis* with pin and seeger FFP..ISO



For cylinder Ø mm	Code	Item	Compliance
12-16	-	FFP06ISO/DIN	ISO 8140
20-25	-	FFP08ISO/DIN	
32-40	041051	FFP10ISO	
50-63	041040	FFP12ISO	
50-63-80	041013	FFP16ISO	
100	041017	FFP20ISO	

*Matching only with rod nipple N..AQB mounted

Female clevis* (body only) FFN..ISO



For cylinder Ø mm	Code	Item	Compliance
12-16	041011	FFP06ISO/DIN	ISO 8140
20-25	041018	FFP08ISO/DIN	
32-40	041014	FFN10ISO	
50-63	041016	FFN12ISO	
50-63-80	041012	FFN16ISO	
100	041015	FFN20ISO	

*Matching only with rod nipple N..AQB mounted

Bearing head (DIN 648K) with female thread* RF..SE



For cylinder Ø mm	Code	Item	Compliance
12-16	041552	RF6SE	ISO 8139
20-25	041553	RF8SE	
32-40	041554	RF10SE	
50-63	041555	RF12SE	
50-63-80	041557	RF16SE	
100	041559	RF20SE	

*Matching only with rod nipple N..AQB mounted

Bearing head (DIN 648K) with male thread RM..SE



For cylinder Ø mm	Code	Item	Compliance
16	041500	RM4SE	ISO 8139
20-25	041501	RM5SE	
32-40	041502	RM6SE	
50-63	041503	RM8SE	
80	041550	RM10SE	DIN
100	041514	RM12SE	

Axial articulated coupling* RBI..



For cylinder Ø mm	Code	Item	Compliance
12-16	041602	RBI6	-
20-25	041603	RBI8	
32-40	041604	RBI10	
50-63	041605	RBI12	
50-63-80	041607	RBI16	
100	041609	RBI20	

*Matching only with rod nipple N..AQB mounted

Angular articulated coupling* RBL..



For cylinder Ø mm	Code	Item	Compliance
12-16	041652	RBL6	-
20-25	041653	RBL8	
32-40	041654	RBL10	
50-63	041655	RBL12	
50-63-80	041657	RBL16	
100	041659	RBL20	

*Matching only with rod nipple N..AQB mounted

Self-aligning articulated coupling* GB..



For cylinder Ø mm	Code	Item	Compliance
12-16	041702	GB010	-
20-25	041703	GB020	
32-40	041704	GB040	
50-63	041706	GB060	
50-63-80	041708	GB100	
100	041709	GB120	

*Matching only with rod nipple N..AQB mounted

Self-aligning coupling* GC..

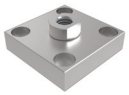

For cylinder Ø mm	Code	Item	Compliance
32-40	041722	GCM10x1,25	-
50-63	041723	GCM12x1,25	
50-63-80	041724	GCM16x1,5	
100	041725	GCM20x1,5	

*Matching only with rod nipple N..AQB mounted

Back head with integrated rear eye* in aluminium CM..ALB



For cylinder Ø mm	Code	Item	Compliance
16	040070	CM16ALB	-
20	040071	CM20ALB	
25	040072	CM25ALB	
32	040073	CM32ALB	
40	040074	CM40ALB	
50	040075	CM50ALB	
63	040076	CM63ALB	
80	040077	CM80ALB	
100	040078	CM100ALB	

Accessory to be ordered together with the cylinder

High foot in aluminium P..ALB



For cylinder Ø mm	Code	Item	Compliance
16	040087	P16ALB	-
20	040088	P20ALB	
25	040095	P25ALB	
32	040089	P32ALB	
40	040090	P40ALB	
50	040091	P50ALB	
63	040092	P63ALB	
80	040093	P80ALB	
100	040094	P100ALB	

Stainless Steel seeger for front head SGX..



For cylinder Ø mm	Code	Item	Compliance
25	171315	SGX025	-
32	171316	SGX032	
40	171317	SGX040	
50	171318	SGX050	
63	171319	SGX063	
80	171320	SGX080	
100	171321	SGX100	

Bracket AS108 (for magnetic reed switches T groove)



For cylinder Ø mm	Code	Item	Cylinder matching
12 ÷ 100	072915	AS108	BSM BDM

Magnetic reed switch T groove ASV..



For cylinder Ø mm	Code	Item	Cylinder matching
12 ÷ 100	070946	ASV1C525	BSM* BDM*
	071863	ASV1C550	
	071864	ASV1C51K	
	071189	ASV1C5M8	
	073639	ASV4D225	
	070246	ASV4D2M8	
	074900	ASV7N225	
	070247	ASV7N2M8	
	070372	ASV7M2M8	
	072918	ASV1H525	

*With bracket AS.. for magnetic reed switches T groove

ATEX magnetic reed switch T groove MK..



For cylinder Ø mm	Code	Item	Compliance	Cylinder matching
12 ÷ 100	071120	MK500A	3D	BSM* BDM*
	071108	MK502A	II1G	

*With bracket AS.. for magnetic reed switches T groove

COMPACT CYLINDERS
series CL

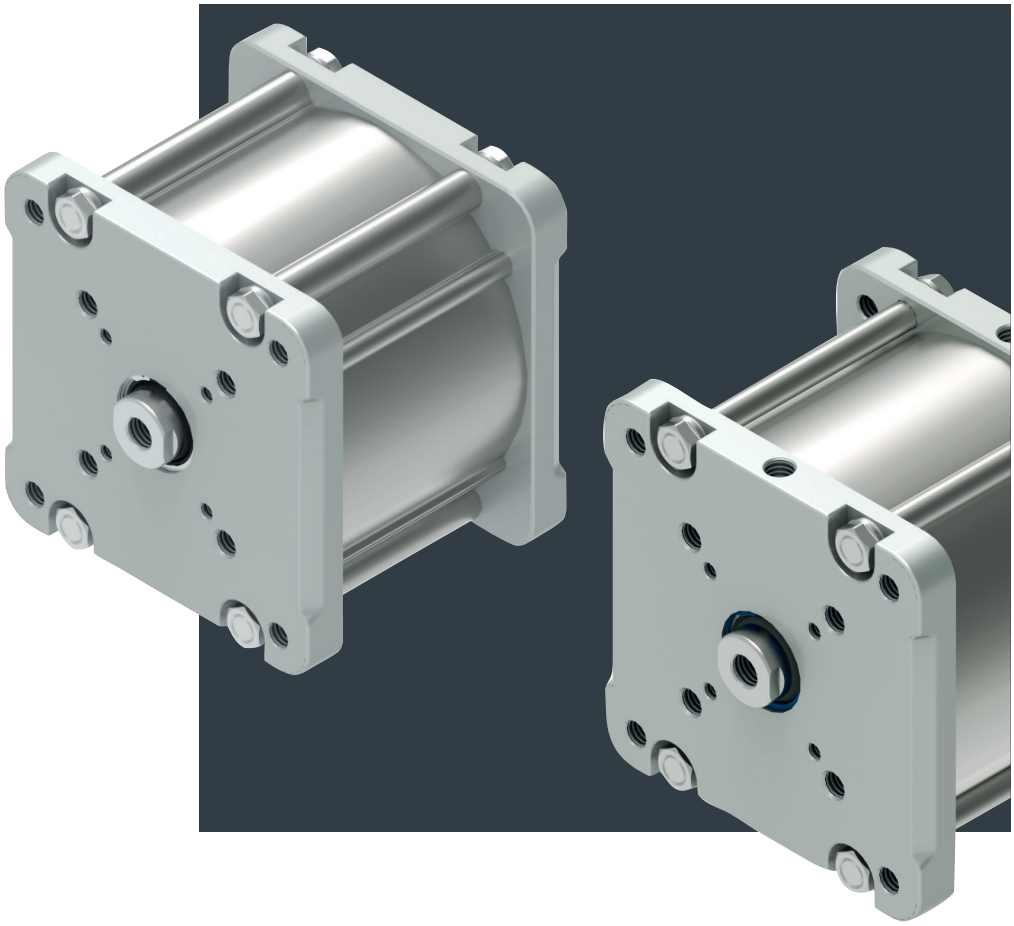

Find out our
key products

- **Solution for most applications**
- **Easy and intuitive choice**
- **Excellent value for money**
- **Wide availability**
- **Fast delivery**

Features and certifications

Series of cylinders with reduced overall dimensions, available in bores from Ø 125 to 250, single acting or double acting, magnetic, with female thread. The end caps are made of powder painted die-cast aluminium, while the body is made of round tube and tie-rods (type CLS and CLD) or special profiled barrel with internal tie-rods (type CLB). Supplied as standard in compliance with Reach and RoHS directives, and SIL certificated. On request, can be also supplied according to the 2014/34/EU ATEX Directive.

3358 5210 3845

Type CLS Ø 125 ÷ 200

from page 1.21.20

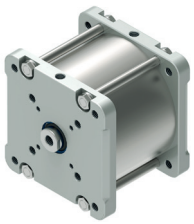

Reduced overall dimension cylinders, available in bores from Ø 125 to 200, single acting, magnetic, with female thread, made with round tube and tie-rods.
The end caps are made of powder painted die cast aluminium. The front end cap has got drilling according to DIN 3358 / ISO 5210 standards, that makes the cylinder suitable for mounting on gate valves.
Magnetic limit switch can be mounted on tie-rods (with a specific bracket to be ordered separately).
These features makes this cylinder also suitable for use in process automation.

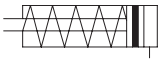

Type CLD Ø 125 ÷ 250

from page 1.21.40

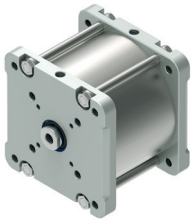

Reduced overall dimension cylinders, available in bores from Ø 125 to 250, double acting, magnetic, with female thread, made with round tube and tie-rods.
The end caps are made of powder painted die cast aluminium. The front end cap has got drilling according to DIN 3358 / ISO 5210 standard, that makes the cylinder suitable for mounting on gate valves.
Magnetic limit switch can be mounted on tie-rods (with a specific bracket to be ordered separately).
These features makes this cylinder also suitable for use in process automation.

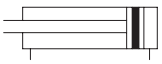

Type CLB Ø 125 ÷ 200

from page 1.21.60

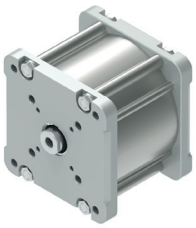

Reduced overall dimension cylinders, available in bores from Ø 125 to 200, double acting, magnetic, with female thread, realized with a special profiled barrel and internal tie-rods, which has several interesting features:
-clean desing;
-easy installation and maintenance;
-resistance to external contamination thanks to the integrated air supply and to the internal air ducting, which does not require the application of any fittings;
-DIN3358 / ISO5210 compliant drilling on the front end cap allows direct mounting to the application;
-NAMUR compliant drilling on the rear head allows direct mounting of valves and solenoid valves;
- grooves for direct application of concealed magnetic limit switch.
These features make this cylinder an integrated element particularly suitable for use in process automation, such as gate valves, guillotine valves and the like, and thus in segments such as water treatment, mining, paper processing, and so on.

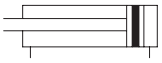

Options

Description	Symbol	Suffix
Male threaded rod	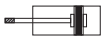	**M**
Anti-rotating plate (available for type CLD only up to Ø 200)	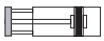	**N**
Through rod (available for type CLD only)		**P**
FKM seals -20°C ÷ +150°C	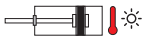	**V**
FKM rod seal -20°C ÷ +80°C	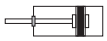	**V1**
Extended rod (indicate the requested WH dimension in mm, E.g.: WH=100; for further information please contact the sales department)		**WH=..**
Special male thread (indicate the requested thread. E.g.: R-M 20x1,5; the special thread AM quote will be the same of the standard thread; the cylinder will be supplied without rod nut; for further information please contact the sales department)*	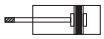	**R-M..**
Extension or reduction of male thread length (indicate the requested AM quote in mm, E.g.: AM=100; for further information please contact the sales department)*	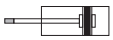	**AM=..**
Special length of front tie-rod (indicate the requested length in mm, E.g.: T1=25; for threads, please refere to the "dimensions with options" drawings of each type; for further information please contact the sales department)	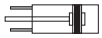	**T1**
ATEX versions on request		**/ATEX**
Special versions on request		**/S**

The options, when possible, can be combined with each other. For options matching see page 1.21.4; For code key see page 1.21.5
*Available only in combination with option M. For further information please contact the sales department.

Options matching

Series	Bore	Model	Standard options matching									
			M	**N** (Ø125÷200)	**P**	**V**	**V1**	**WH=..** (2)	**R-M..** (3)	**AM=..** (4)	**T1** (5)	**/ATEX**
CLS	Ø 125 ÷ 200	Standard	●	-	-	●	●	● (2)	-	-	●	●
	Ø 125 ÷ 200	Male threaded rod (M)		-	-	●	●	●	●	●	●	●
CLD	Ø 125 ÷ 250	Standard	●	●	●	●	●	● (2)	-	-	●	●
	Ø 125 ÷ 250	Anti-rotating plate (N)	● (1)		●	●	●	-	-	-	-	●
	Ø 125 ÷ 200	Through rod (P)	● (1)	-		●	●	● (2)	● (3)	● (4)	●	●
	Ø 125 ÷ 250	Male threaded rod (M)		● (1)	● (1)	●	●	●	●	●	●	●
CLB	Ø 125 ÷ 200	Standard	●	-	-	●	●	● (2)	-	-	●	●
	Ø 125 ÷ 200	Male threaded rod (M)		-	-	●	●	●	●	●	●	●

Key

● allowed matching; - not allowed matching

Option combinations - notes

(1) The male threaded rod option (**M**) in combination with through rod option (**P**) is applied on both sides of rod, except when combined with the anti-rotation plate option (**N**), in which case the male rod will only be applied on the side opposite the plate.

(2) Option **WH=..** require to indicate the desired dimension in mm (E.g.: "WH=100"). If combined with through rod option (**P**), the extender rod option (**WH=..**) is applied on one rod side only. For further information please contact the sales department.

(3) Option **RM..** require to indicate the desired ale thread (E.g.: "R-M20x1,5") with option **M**. For further information please contact the sales department.

(4) Option **AM=..** require to indicate the desired male thread length in mm (E.g.: "AM=100") with option **M**. For further information please contact the sales department.

(5) Option **T1** require to indicate the desired tie-rod length in mm (E.g.: "T1=25"). For thread, please refere to the "dimension with option" drawings of each type. For further information please contact the sales department.

Code key

Bore	/	Stroke	Type	Options							/	ATEX version	Special version
160	/	50	CLD			P					/		

- Bore: Ø 125, 160, 200, 250 (1)
- Stroke: See tables on page 1.21.20 (CLS type) 1.21.40 (CLD type) 1.21.60 (CLB type)
- Type:
  - CLS — Single acting Magnetic Female thread 
  - CLD — Double acting Magnetic Female thread 
  - CLB — Double acting Magnetic Female thread 
- Options: M; N (2); P (1); V; V1; WH=..; R-M; AM=..; T1
- ATEX version: ATEX — II 2G Ex h IIC T5 Gb, II 2D Ex h IIIC T100°C Db
- Special version: S

How to order

Bore		Stroke	Type	Options
160	/	50	CLD	P

Notes

Options in the same grid are alternative to each others.
For further information on options and their matching see page 1.21.3 and 1.21.4
For standard materials see table in the side page.

(1) Available for CLD type only
(2) Available for CLD type only, up to bore Ø 200

For further information on the ATEX 2014/34/EU Directive, on classifications and protections, see from page III.1

Seal kit standard*

Number of components	Description
n. 1	Rod seal
n. 2	Barrell o-ring
n. 2	Piston seal
n. 2	Elastic dampers

*For cylinders with option P or V, the kit include further components.

Standard seal kit code key

Cylinder bore	/	Seal kit	/	Cylinder type
160	/	SG	/	CL

- Cylinder bore: Ø 125, 160, 200, 250
- Seal kit: SG
- Cylinder type: CL*

*Compatible with CLS, CLD and CLB types.

Standard materials

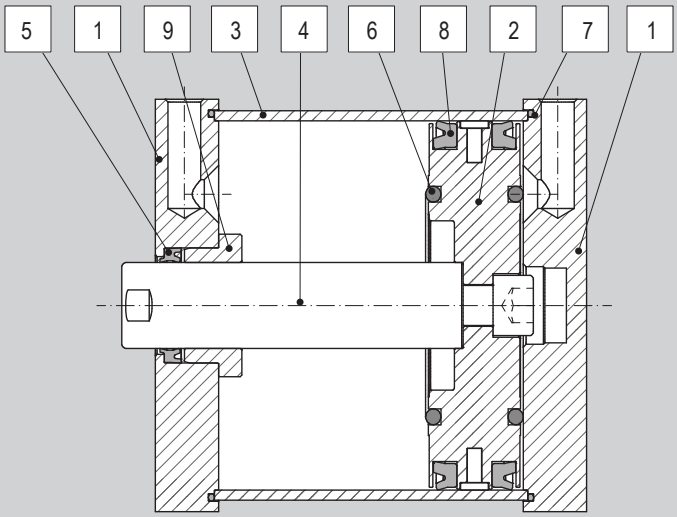

Position	Description	Materials
1	End caps	Poweder painted die cast aluminium
2	Piston	Die cast aluminium
3	Tube	Anodised aluminium
4	Rod	Stainless Steel AISI 304
5	Rod seal	NBR
6	Elastic damper	NBR
7	Barrel o-ring	NBR
8	Piston seal	NBR
9	Bushing	Steel + PTFE
-	Tie-rods	Steel

Direct mounting on process automation

Type: **CLB**

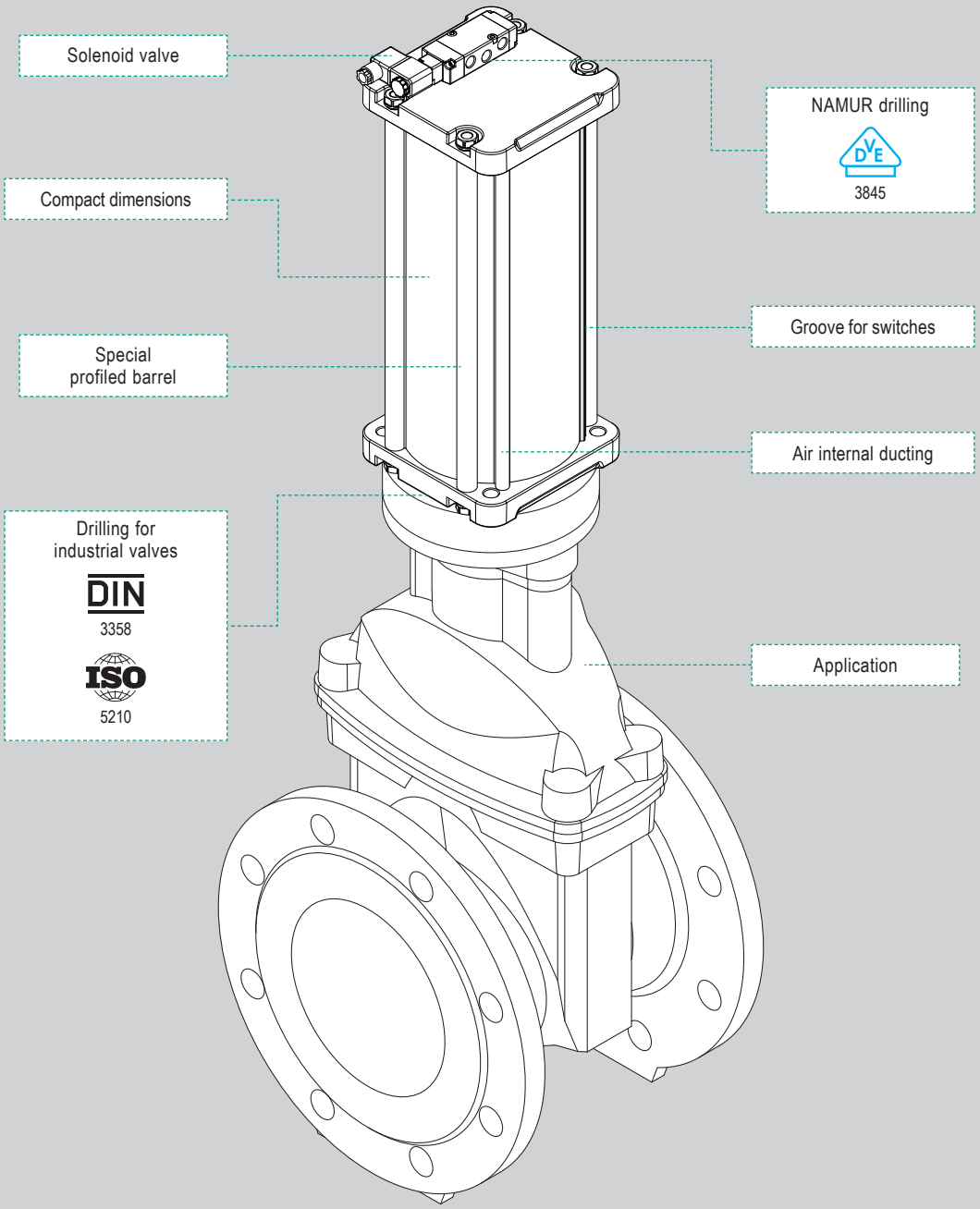

Thanks to the drilling conforming to DIN 3358 / ISO 5210 standards on the front end cap, the CLB compact cylinders are suitable for direct mounting to gate valves, guillotine valves, butterfly valves and similar.

The rear end cap, on the other hand, has a drilling conforming to the NAMUR (VDI/VDE 3845) standards, allowing direct mounting to the cylinder of valves or solenoid valves with NAMUR interface.

The integrated air supply and internal air ducting, do not require any connection with fittings.

The special profiled barrel also with two grooves allowing the direct mounting of magnetic reed switches.

The integrated air supply, the air internal ducting and the grooves for magnetic reed switches provide to the cylinder an extremely clean design, which make the component very resistant to external contamination, with no cavities where dirt could settle.

All the above described features make this series of compact cylinders particularly suitable for use in process automation, and therefore in sectors such as water treatment, mining, paper processing, and similar.

Accessories

Type: **CLS**
CLD

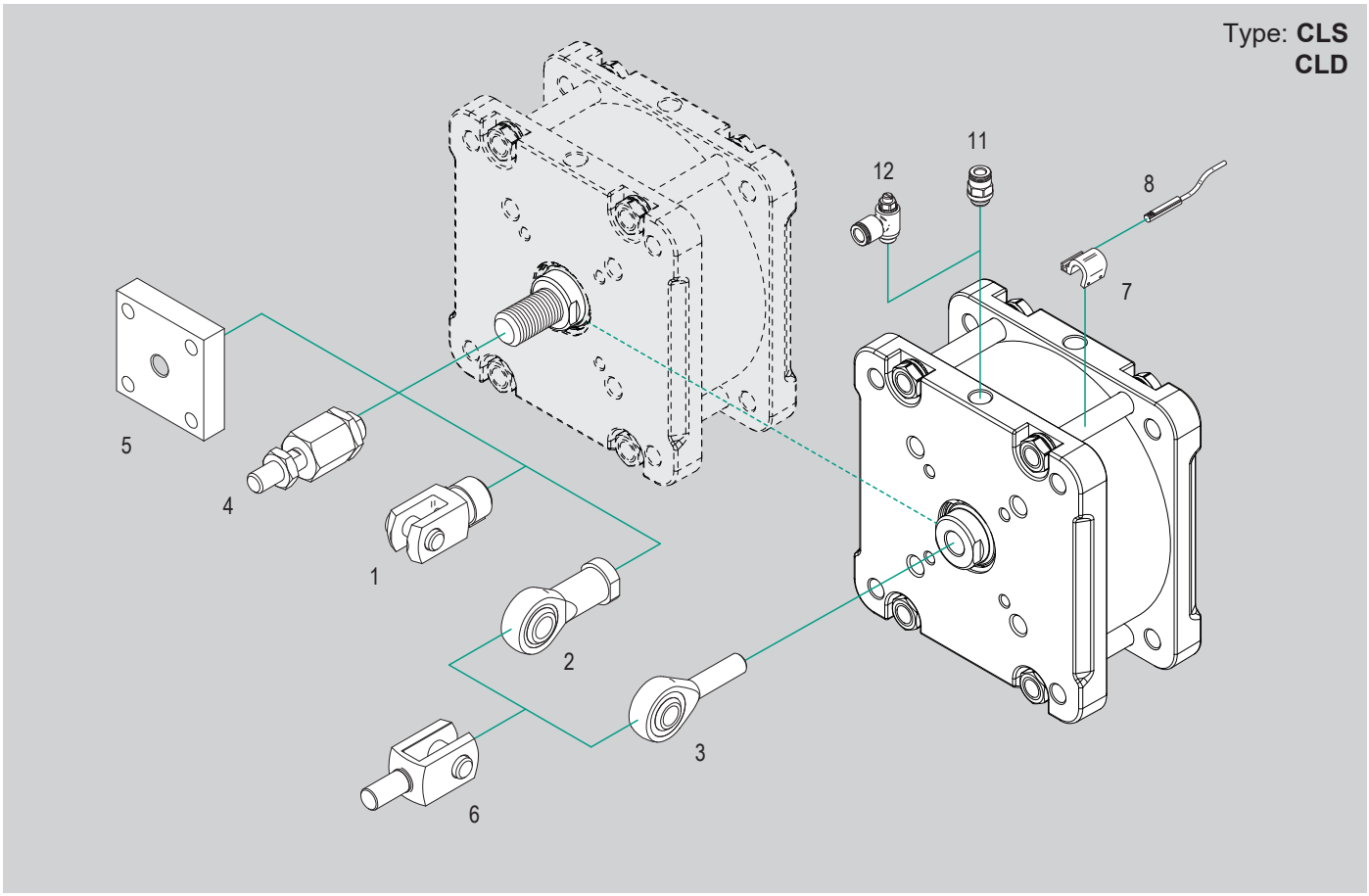

Type: **CLB**

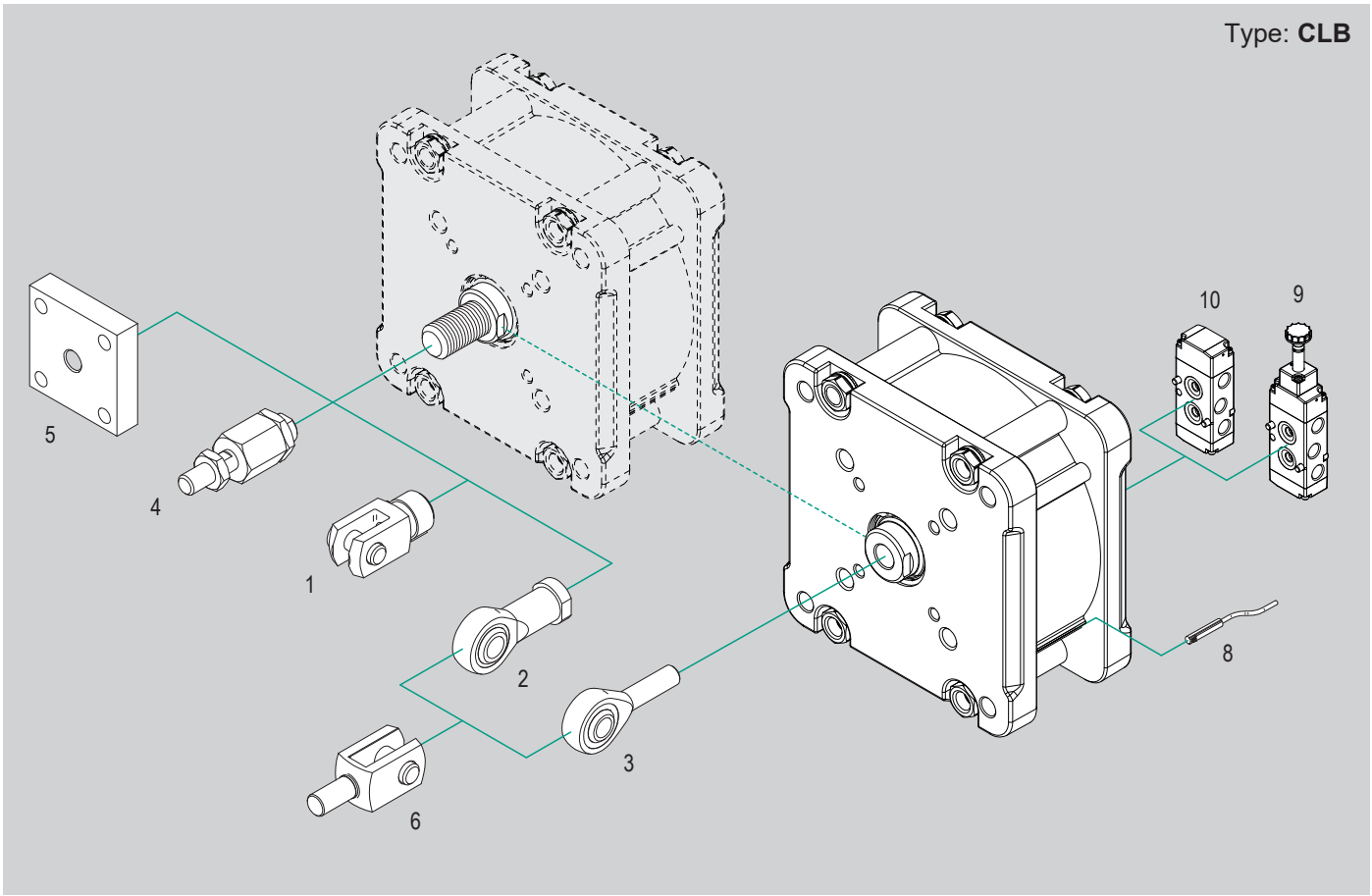

N.	Cylinder bore	Item	Description	Compliance	Matching		Code page	Data sheet page
					CLS-CLD	CLB		
1	Ø 125	FF..ISO	ISO female clevis with clip	ISO 8140	-	●(1)	1.21.90	1.85.10
	Ø 125 ÷ 250	FFP..ISO	ISO female clevis with pin and seeger		●(1)	●(1)		
	Ø 125 ÷ 250	FFN..ISO	ISO female clevis (body only)		●(1)	●(1)		1.85.11
2	Ø 125 ÷ 250	RF..SE	Bearing head (DIN 648K) with female thread	ISO 8139	●(1)	●(1)		1.90.1
3	Ø 125 ÷ 200	RM..SE	Bearing head (DIN 648K) with male thread	DIN	●	●		1.90.2
4	Ø 125 ÷ 250	GB..	Bearing - Self-aligning articulated coupling	-	●(1)	●(1)		1.90.10
5	Ø 125 ÷ 250	GC..	Self-aligning coupling		●(1)	●(1)		1.90.40
6	Ø 125 ÷ 160	FEM..	Female clevis with male thread		●	●		1.88.1
7	Ø 125 ÷ 250	AS..	Bracket for reed switches type "T"		●	-		1.120.3
8	Ø 125 ÷ 250	ASV..	Magnetic reed switch T groove		●	●		1.110.10
		MK..	ATEX magnetic reed switch T groove	2014/34/UE	●	●		1.113.1
9	Ø 125 ÷ 200	A1NE..	Namur solenoid operated valve	NAMUR	-	●	1.21.91	2.44.1
		A1NE..X..	Namur solenoid operated ATEX valve	NAMUR 2014/34/UE	-	●		2.320.1
10		A1NP..	Namur air operated valve	NAMUR	-	●		2.50.1
		A1NP..X..	Namur air operated ATEX valve	NAMUR 2014/34/UE	-	●		2.320.1
11	Ø 125 ÷ 250	R..	Push-in fittings	-	●	-	4.2.1	
12	Ø 125 ÷ 250	V..C	Flow controls, for cylinders		●	-	4.94.1	

Key

● matching accessory; - not matching accessory

(1) Matching only with option M

Compact Cylinders series CL
Series CLS

Main features

125 ÷ 200	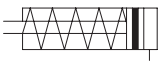	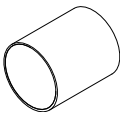	**CLS**
Bores Ø	Single acting Magnetic With female thread	Tube profile	Type

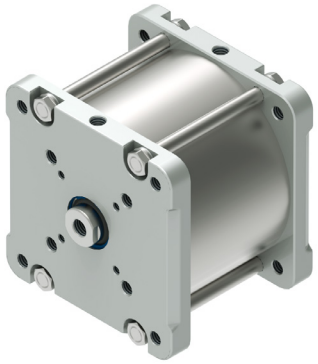

Technical data

Bore Ø mm	125	160	200
Fluid	Filtered compressed air with or without lubrication. Lubrication, if started, must be continued.		
Pressure range	2 ÷ 10 bar		
Temperature range	-20°C ÷ +80°C (standard / V1)	-20°C ÷ +150°C (V)	
Port	1/4"	3/8"	
Strokes	10 ÷ 50 mm		
Rod thread	M14	M20	

Standard strokes

	CLS Bore Ø mm		
Stroke mm	125	160	200
10			
25			
50			

Key
Standard stroke

Standard dimensions

Type: **CLS**

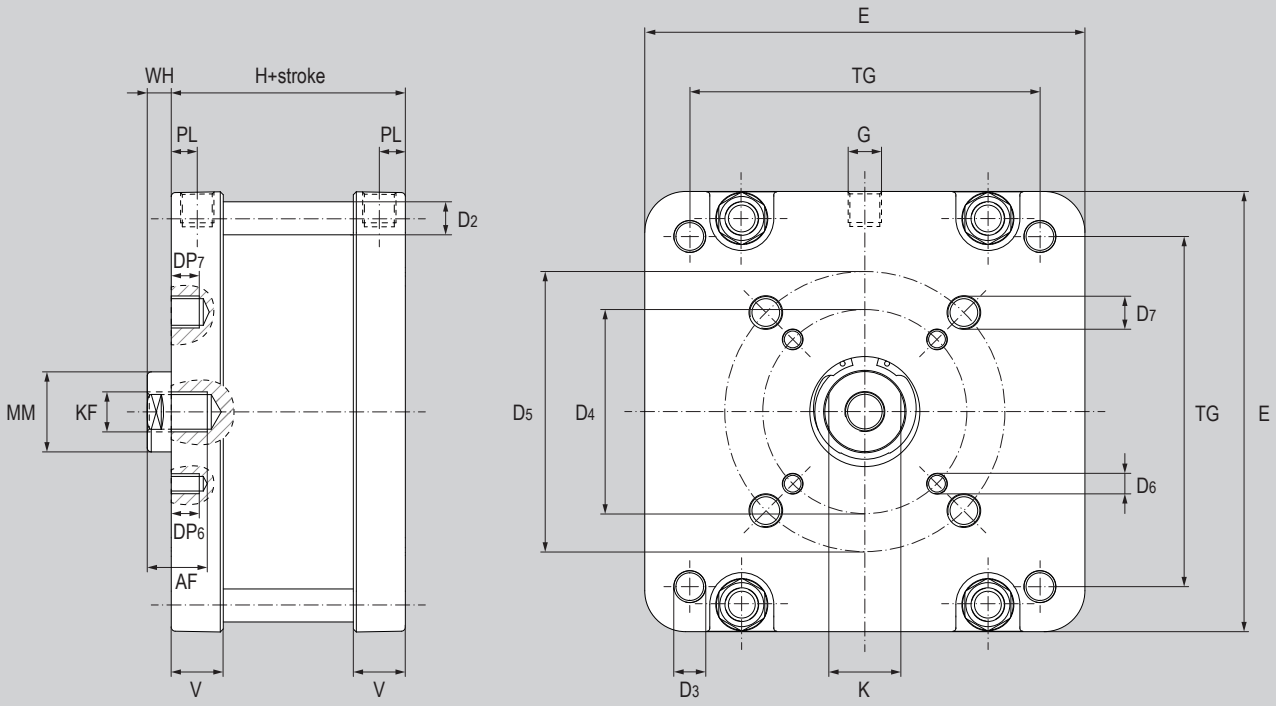

Ø (mm)	E	MM	KF	ØD$_2$	ØD$_3$	ØD$_4$	ØD$_5$	ØD$_6$	DP$_6$	ØD$_7$	DP$_7$	G	PL	TG	K	AF	V	WH	H
125	140	32	M14	10	M12	102	-	M10	15	-	-	1/4"	11	110	28	25	22	10	78
160	180	40	M20	12	M16	102	-	M10	15	-	-	3/8"	13	140	36	25	26	12	87
200	220	40	M20	16	M16	102	140	M10	15	M16	24	3/8"	13	175	36	25	26	12	87

Dimensions with options

Type: **..M**

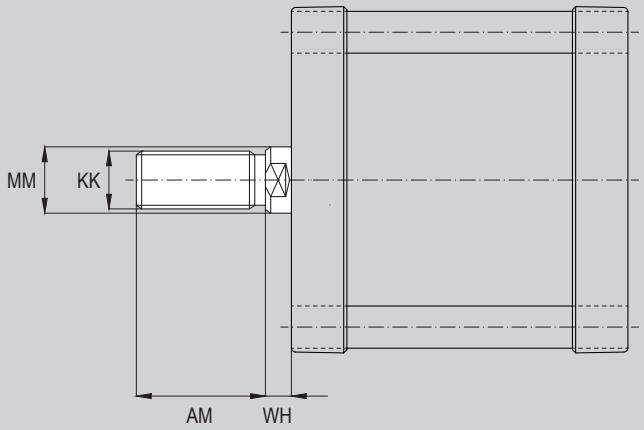

Type: **..V**

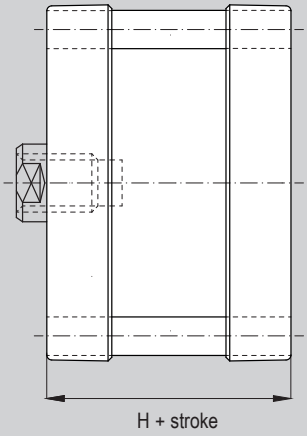

Type: **..T1**

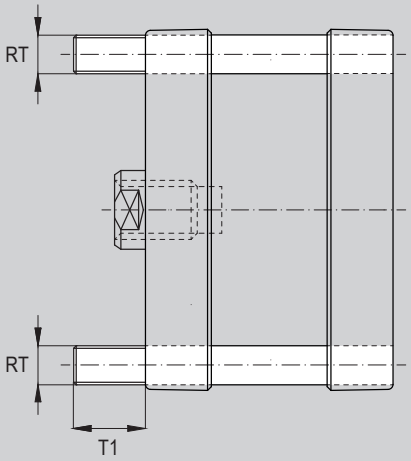

Ø (mm)	KK	MM	WH	AM	H	RT	T1
125	M27x2	32	10	54	83	M10	*
160	M36x2	40	12	72	91	M12	*
200	M36x2	40	12	72	105	M16	*

* Indicate the desired dimension in mm (E.g.: "T1=25")

Main features

125 ÷ 250

Bores Ø

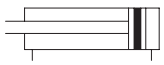

Double acting
Magnetic
With female thread

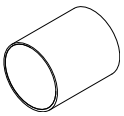

Tube profile

CLD

Type

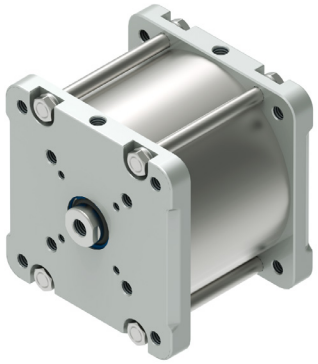

Technical data

Bore Ø mm	125	160	200	250
Fluid	Filtered compressed air with or without lubrication. Lubrication, if started, must be continued.			
Pressure range	2 ÷ 10 bar			
Temperature range	-20°C ÷ +80°C (standard / V1)	-20°C ÷ +150°C (V)		
Port	1/4"	3/8"		1/2"
Strokes	25 ÷ 300 mm			
Rod thread	M14	M20		M24

Standard strokes

	CLD Bore Ø mm			
Stroke mm	125	160	200	250
25				
50				
75				
100				
125				
160				
200				
250				
300				

Key
Standard stroke

Standard dimensions

Type: **CLD**

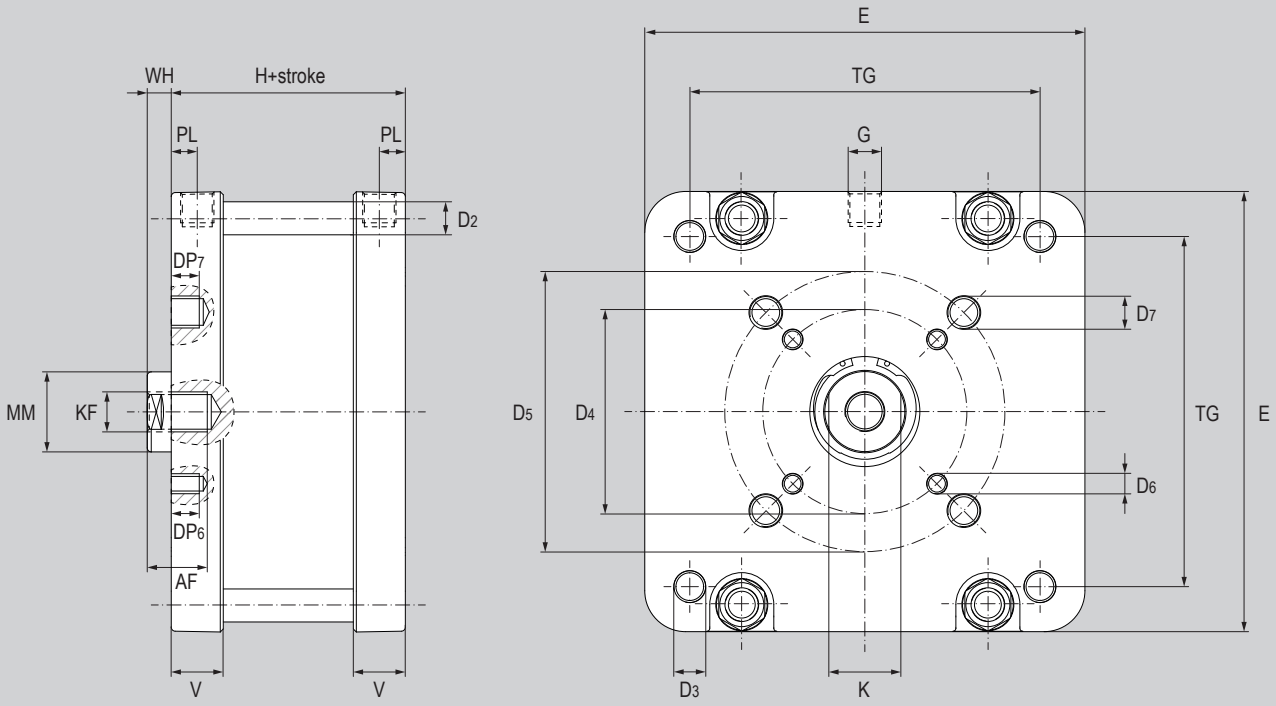

Ø (mm)	E	MM	KF	ØD$_2$	ØD$_3$	ØD$_4$	ØD$_5$	ØD$_6$	DP$_6$	ØD$_7$	DP$_7$	G	PL	TG	K	AF	V	WH	H
125	140	32	M14	10	M12	102	-	M10	15	-	-	1/4"	11	110	28	25	22	10	78
160	180	40	M20	12	M16	102	-	M10	15	-	-	3/8"	13	140	36	25	26	12	87
200	220	40	M20	16	M16	102	140	M10	15	M16	24	3/8"	13	175	36	25	26	12	87
250	270	40	M24	16	M20	102	140	M10	15	M16	24	1/2"	15	220	36	35	-	12	116

Dimensions with options

Type: **..M**

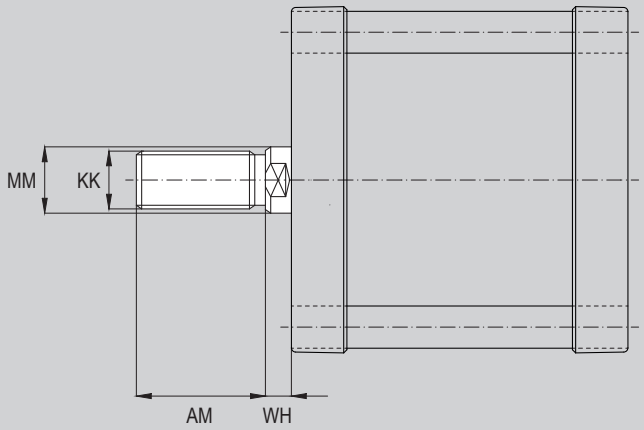

Type: **..V**

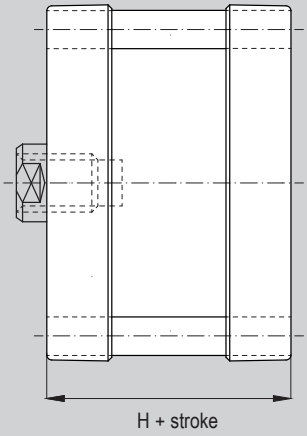

Type: **..T1**

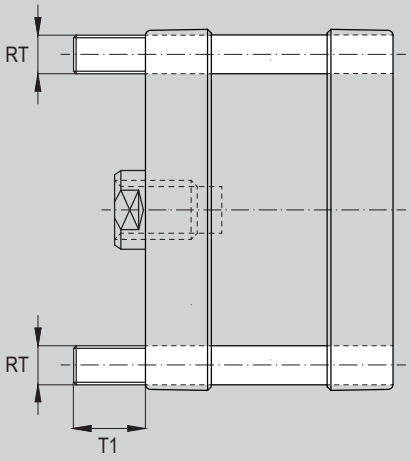

Ø (mm)	KK	MM	WH	AM	H	RT	T1
125	M27x2	32	10	54	83	M10	*
160	M36x2	40	12	72	91	M12	*
200	M36x2	40	12	72	105	M16	*
250	M36x2	40	12	72	116	M20	*

* Indicate the desired dimension in mm (E.g.: "T1=25")

Dimensions with options

Type: **..N**

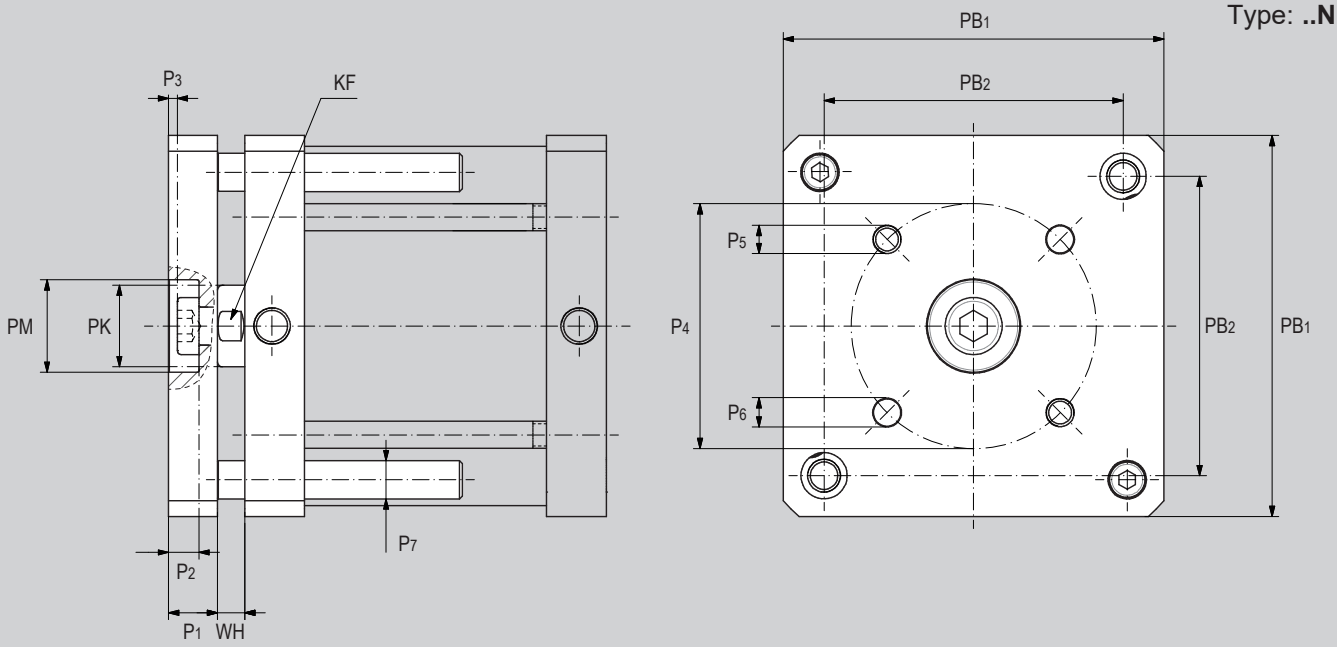

Ø (mm)	PB_1	PB_2	PK	PM	P_1	P_2	P_3	$ØP_4$	$ØP_5$	$ØP_6$	$ØP_7$	KF	WH
125	140	110	30	34	18	12	3	90	M10	10	14	28	10
160	180	140	40	46	23	16	3	110	M12	12	20	36	12
200	220	175	40	46	23	16	3	110	M12	12	20	36	12

Dimensions with options

Type: **..P**

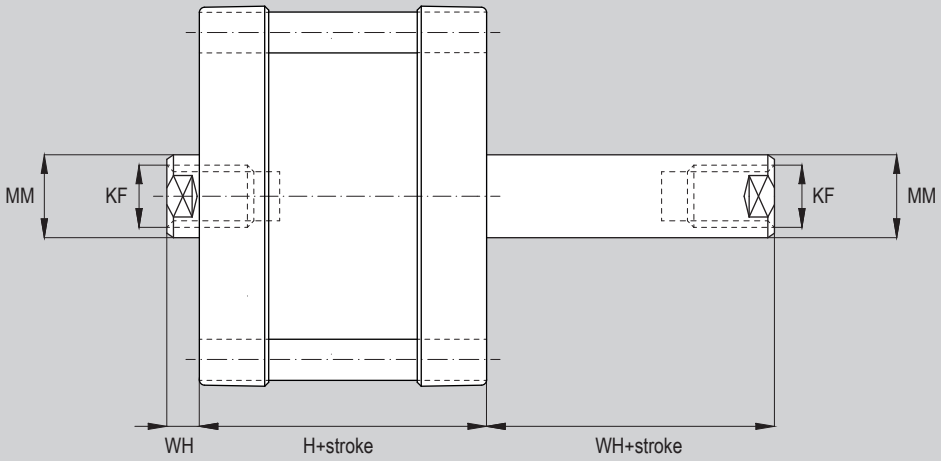

Ø (mm)	MM	KF	WH	H
125	32	M14	10	78
160	40	M20	12	87
200	40	M20	12	87
250	40	M24	12	116

Main features

125 ÷ 200

Bores Ø

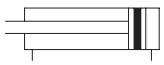

Double acting
Magnetic
With female thread

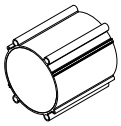

Tube profile

CLB

Type

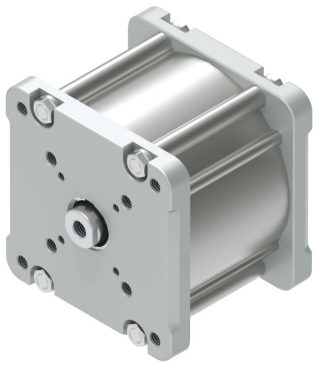

Technical data

Bore Ø mm	125	160	200	250
Fluid	Filtered compressed air with or without lubrication. Lubrication, if started, must be continued.			
Pressure range	2 ÷ 10 bar			
Temperature range	-20°C ÷ +80°C (standard / V1)	-20°C ÷ +150°C (V)		
Port	1/4"	3/8"		1/2"
Strokes	10 ÷ 1600 mm			
Rod thread	M14	M20		M24

Standard strokes

	CLB Bore Ø mm		
Stroke mm	125	160	200
10			
25			
50			
75			
100			
125			
160			
200			
250			
300			

Key
Standard stroke

Standard dimensions

Type: **CLB**

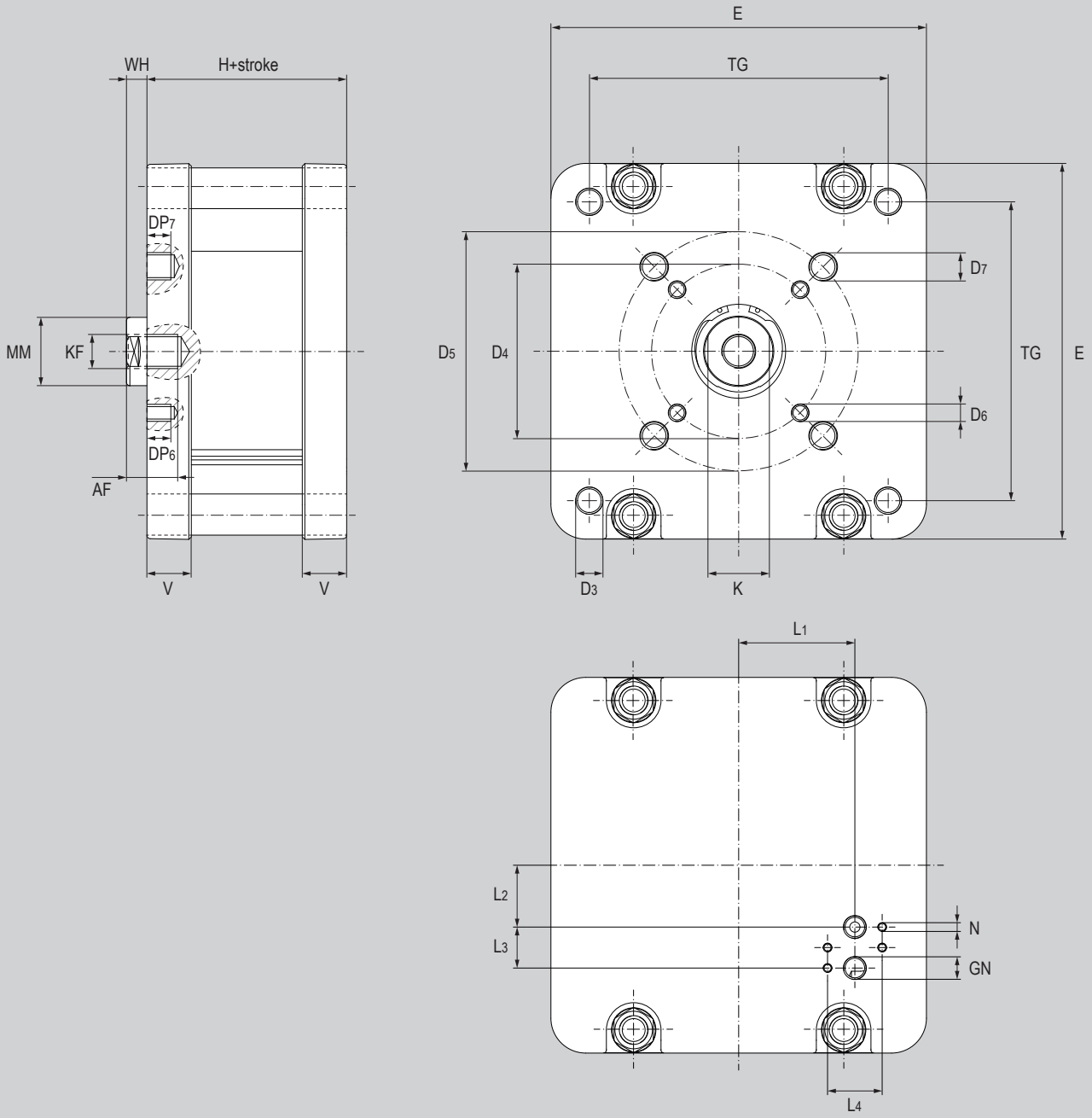

Ø (mm)	E	MM	KF	ØD3	ØD4	ØD5	ØD6	DP6	ØD7	DP7	GN	N	TG	K	AF	V	WH	H	L1	L2	L3	L4
125	140	32	M14	M12	102	-	M10	15	-	-	G1/4"	M5x0,8	110	28	25	22	10	78	40	13,5	24	32
160	180	40	M20	M16	102	-	M10	15	-	-	G1/4"	M5x0,8	140	36	25	26	12	87	57	22	24	32
200	220	40	M20	M16	102	140	M10	15	M16	24	G1/4"	M5x0,8	175	36	25	26	12	87	68	22	24	32

Dimensions with options

Type: **..M**

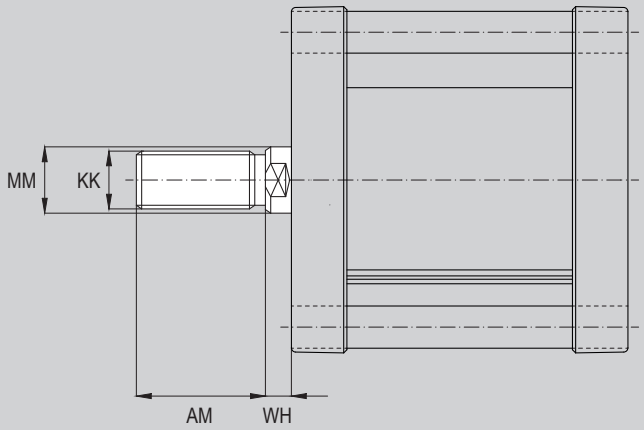

Type: **..V**

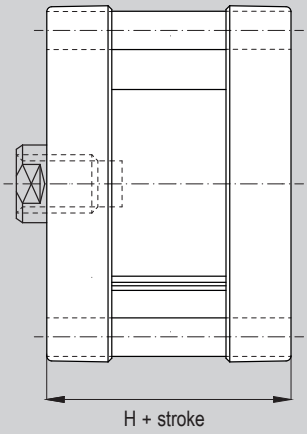

Type: **..T1**

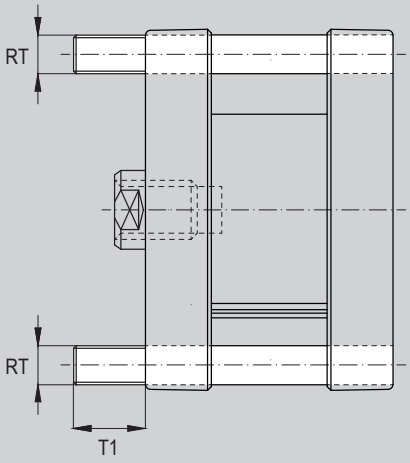

Ø (mm)	KK	MM	WH	AM	H	RT	T1
125	M20x1,5	32	20	40	83	M10	*
160	M27x2	40	24	54	91	M12	*
200	M36x2	40	30	72	105	M16	*

* Indicate the desired dimension in mm (E.g.: "T1=25")

Female clevis* with clip FFP..ISO



For cylinder Ø mm	Code	Item	Matching	Compliance
125	**	FF27ISO	CLS, CLD	ISO 8140
	041007	FF20ISO	CLB	
160	**	FF36ISO	CLS, CLD	
	**	FF27ISO	CLB	
200	**	FF36ISO	CLS, CLD	
			CLB	
250	**	FF36ISO	CLS, CLD	

*Compatibile solo con variante M **Su richiesta

Female clevis* with pin and seeger FFP..ISO



For cylinder Ø mm	Code	Item	Matching	Compliance
125	041009	FFP27ISO	CLS, CLD	ISO 8140
	041017	FFP20ISO	CLB	
160	041010	FFP36ISO	CLS, CLD	
	041009	FFP27ISO	CLB	
200	041010	FFP36ISO	CLS, CLD	
			CLB	
250	041010	FFP36ISO	CLS, CLD	

*Compatibile solo con variante M

Female clevis* (body only) FFN..ISO



For cylinder Ø mm	Code	Item	Matching	Compliance
Ø mm	**	FFN27ISO	CLS, CLD	ISO 8140
	041015	FFN20ISO	CLB	
160	**	FFP36ISO	CLS, CLD	
	**	FFN27ISO	CLB	
200	**	FFN36ISO	CLS, CLD	
			CLB	
250	**	FFN36ISO	CLS, CLD	

*Compatibile solo con variante M **Su richiesta

Bearing head (DIN 648K) with female thread* RF..SE



For cylinder Ø mm	Code	Item	Matching	Compliance
125	041562	RF30SE	CLS, CLD	ISO 8139
	041559	RF20SE	CLB	
160	041563	RF35SE	CLS, CLD	
	041562	RF30SE	CLB	
200	041563	RF35SE	CLS, CLD	
			CLB	
250	041563	RF35SE	CLS, CLD	

*Compatibile solo con variante M

Bearing head (DIN 648K) with male thread RM..SE



For cylinder Ø mm	Code	Item	Compliance
125	041506	RM14SE	DIN
160÷200	041521	RM20SE	

Female clevis with male thread FEM..



For cylinder Ø mm	Code	Item	Compliance
***	041064	FEM20	-
***	041065	FEM27	

***per la compatibilità con teste a snodo vedi pag. 1.88.1 e pag. 1.90.1

Self-aligning articulated coupling* GB..



For cylinder Ø mm	Code	Item	Matching	Compliance
Ø mm	041711	GB130	CLS, CLD	-
	041709	GB120	CLB	
160	041712	GB160-200	CLS, CLD	
	041711	GB130	CLB	
200	041712	GB160-200	CLS, CLD	
			CLB	
250	041712	GB160-200	CLS, CLD	

*Compatibile solo con variante M

Self-aligning coupling* GC..

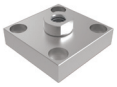

For cylinder Ø mm	Code	Item	Matching	Compliance
125	041726	GCM27x2	CLS, CLD	-
	041725	GCM20x1,5	CLB	
160	041727	GCM36x2	CLS, CLD	
	041726	GCM27x2	CLB	
200	041727	GCM36x2	CLS, CLD	
			CLB	
250	041727	GCM36x2	CLS, CLD	

*Compatibile solo con variante M

Magnetic reed switch T groove ASV..



For cylinder Ø mm	Code	Item	Cylinder matching
125 ÷ 250	070946	ASV1C525	CLS* CLD* CLB
	071863	ASV1C550	
	071864	ASV1C51K	
	071189	ASV1C5M8	
	073639	ASV4D225	
	070246	ASV4D2M8	
	074900	ASV7N225	
	070247	ASV7N2M8	
	070372	ASV7M2M8	
	072918	ASV1H525	

*With bracket type AS.. for magnetic reed switches T groove

ATEX magnetic reed switch T groove MK..



For cylinder Ø mm	Code	Item	Compliance	Cylinder matching
125 ÷ 250	071120	MK500A	Ex 3D	CLS* CLD* CLB
	071108	MK502A	Ex II1G	

*With bracket type AS.. for magnetic reed switches T groove

Solenoid operated valves Namur* 1/4"



Code	Item	Matching
034059	A1NE230	CLB
034060	A1NE232	
034057	A1NE250	
034058	A1NE251	
034174	A1NE270	
034179	A1NE271	
034254	A1NE272	

*For ATEX solenoid operated NAMUR valves, see from page 2.320.1

Bracket AS.. for magnetic reed switches T groove



For cylinder Ø mm	Code	Item	Cylinder matching
125	072908	AS101	CLS CLD
160	072909	AS102	
200	072910	AS103	
250	072911	AS104	

Air operated valves Namur* 1/4"



Code	Item	Matching
034238	A1NP230	CLB
034239	A1NP232	
034108	A1NP250	
034240	A1NP251	
034251	A1NP270	
034252	A1NP271	
034253	A1NP272	

*For ATEX air operated NAMUR valves, see from page 2.320.1

Notes

COMPACT
Guided cylinders



Find out our
key products

- **Solution for most applications**
- **Easy and intuitive choice**
- **Excellent value for money**
- **Wide availability**
- **Fast delivery**

Features and certifications

Series of compact guided cylinders, available in bores from Ø 6 to 100, double acting, magnetic, with self-lubricating bushings or spherical bearings.
Supplied as standard in compliance with Reach and RoHS directives. On request, type GEDB and GEDS can be also supplied according to the 2014/34/EU ATEX Directive.

Type GEDB Ø 6 ÷ 100

from page 1.23.20



Compact guided cylinders, available in bores from Ø 6 to 100, double acting, magnetic, with self-lubricating bushings.
The extruded body is machined with grooves allowing the mounting of magnetic reed switches directly, not protruding beyond the profile of the cylinder, and elastic dampers on front and end covers.
On request these cylinders can be supplied according to the ATEX Directive.

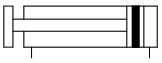

Type GEDS Ø 12 ÷ 100

from page 1.23.20



Compact guided cylinders, available in bores from Ø 12 to 100, double acting, magnetic, with spherical bearings.
The extruded body is machined with grooves allowing the mounting of magnetic reed switches directly, not protruding beyond the profile of the cylinder, and elastic dampers on front and end covers.
On request these cylinders can be supplied according to the ATEX Directive.

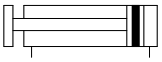

Type GPB Ø 12 ÷ 63

from page 1.23.50



Compact guided cylinders, available in bores from Ø 12 to 63, double acting, magnetic, with self-lubricating bushings.
Made of solid aluminium machined allow high torsion and lateral loads. Equipped with grooves for mounting magnetic reed switches directly, not protruding beyond the profile of the cylinder, and elastic dampers on front and end covers.

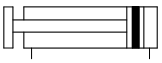

Type GPS Ø 12 ÷ 63

from page 1.23.50



Compact guided cylinders, available in bores from Ø 12 to 63, double acting, magnetic, with spherical bearings.
Made of solid aluminium machined allow high torsion and lateral loads. Equipped with grooves for mounting magnetic reed switches directly, not protruding beyond the profile of the cylinder, and elastic dampers on front and end covers.

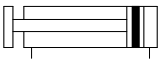

Options

Description	Symbol	Suffix
FKM seals (only for series GED.. from Ø 10 to 100) -20°C ÷ +150°C	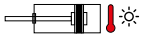	**V**
ATEX versions on request (only for series GED..)		**/ATEX**
Special versions on request		**/S**

The options, when this is possible, can be combined with each other. For options matching and code key, see the tables below.

Options matching

Series	Bore	Model	Standard options matching	
			V (Ø10÷100)	**/ATEX**
GEDB	Ø 6 ÷ 100	Standard	●	●
GEDS	Ø 12 ÷ 100	Standard	●	●
GPB-GPS	Ø 12 ÷ 63	Standard	-	-

Key
● allowed matching; - not allowed matching

Code key

Bore	/	Stroke	Type	Options (1)	/	ATEX version (1)	Special version
32	**/**	**50**	**GEDB**	**V**	**/**		

Bore	Stroke	Type	Options	ATEX	ATEX version	Special version
Ø 6*, 10*, 12, 16, 20, 25, 32, 40, 50, 63, 80**, 100**	For strokes see table on page 1.23.20 (GEDB-GEDS) 1.23.50 (GPB-GPS)	GEDB Single acting Magnetic With self-lubricating bushings GEDS Double acting Magnetic With spherical bearings GPB Double acting Magnetic With self-lubricating bushings GPS Double acting Magnetic With spherical bearings	V	ATEX	CE Ex II 2G Ex h IIC T5 Gb II 2D Ex h IIIC T100°C Db	S

*Only GEDB type
**Only GEDB - GEDS type

How to order

Bore		Stroke	Type	Options
32	**/**	**50**	**GEDB**	**V**

Notes

For further information on options and their matching, see tables above.

For further information on the ATEX 2014/34/EU Directive, on classifications and protections, see from page III.1

(1) Only for GEDB and GEDS type.

Standard materials

Type: **GEDB, GEDS**

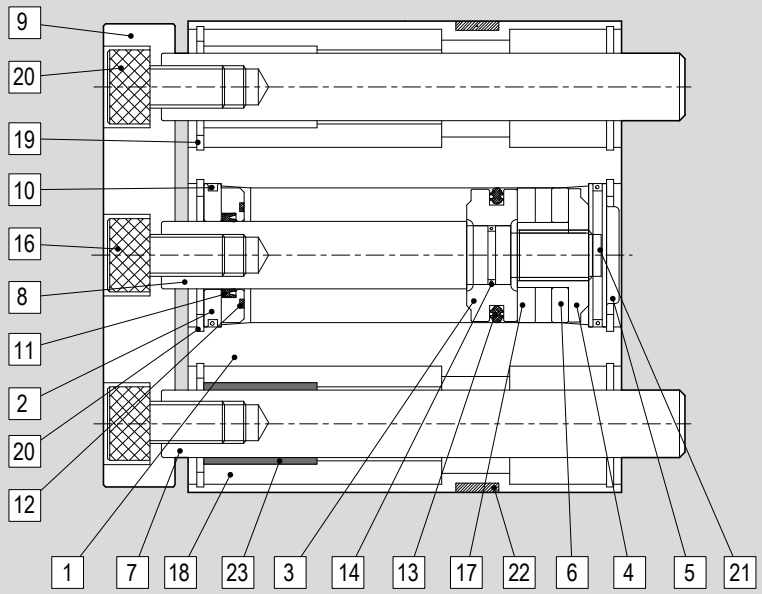

Position	Description	Materials		
		GEDB		GEDS
		Ø 6 ÷ 10	Ø 12 ÷ 100	Ø 12 ÷ 100
1	Body	Anodised aluminium		Anodised aluminium
2	Head cover	Iron	Anodised aluminium	Anodised aluminium
3	Piston	Copper		Copper
4	Ring	Copper		Copper
5	End cover	Anodised aluminium		Anodised aluminium
6	Ring	PTFE		PTFE
7	Rod	Carbon steel		Carbon steel
8	Rod	Carbon steel		Carbon steel
9	Plate	Anodised aluminium		Anodised aluminium
10	Head cover o-ring	NBR		NBR
11	Rod seal	NBR		NBR
12	Cushioning o-ring	NBR		NBR
13	Piston seal	NBR		NBR
14	Piston o-ring	NBR		NBR
15	Snap ring	Armonic steel		Armonic steel
16	Mounting rod nut	Steel		Steel
17	Magnet	Polymer		Polymer
18	Bush support	Copper		Copper
19	Snap ring holder	Steel		Steel
20	Plate screw	Steel		Steel
21	Rubber lining	NBR		NBR
22	Magnet	Polymer		Polymer
23	Bush	PTFE		PTFE
24	Linear bearing	-		Steel
25	Rod	Steel		Steel

Standard materials

Type: **GPB, GPS**

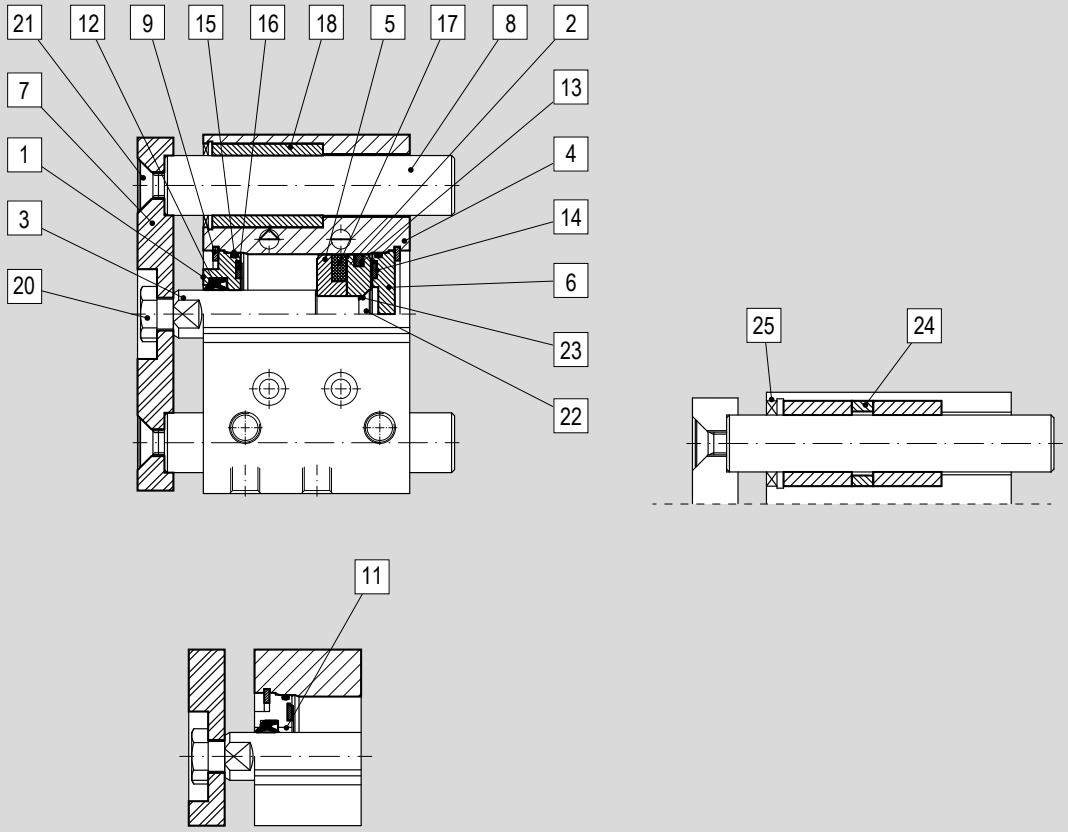

Position	Description		Materials							
			Ø 12	Ø 16	Ø 20	Ø 25	Ø 32	Ø 40	Ø 50	Ø 63
1	Head cover		Brass	Hard anodised aluminium						
2	Piston		Hard anodised aluminium							
3	Rod		Stainless Steel	Carbon steel						
4	Body		Hard anodised aluminium							
5	Magnet holder		Hard anodised aluminium							
6	End cover		Hard anodised aluminium							
7	Guide plate		Nickel-plated carbon steel							
8	Rod guide	GPB	Carbon steel							
		GPS	Special steel							
9	Retaining ring		Nickel-plated carbon steel							
10	Retaining ring		Nickel-plated carbon steel							
11	Oilless bearing		Oil-impregnated sintered alloy							
12	Rod packing		NBR							
13	Piston seal		NBR							
14	Rubber lining		NBR							
15	Cylinder gasket		NBR							
16	Rubber lining		NBR							
17	Magnet		Magnetic material							
18	Oilless bearing		Oil-impregnated sintered alloy							
19	Linear bearing		Special steel							
20	Hexagon socket head screw		Nickel-plated carbon steel							
21	Screw		Nickel-plated carbon steel							
22	Screw		Nickel-plated carbon steel							
23	O-ring		NBR							
24	Stroke pad		Hard anodised aluminium							
25	Dust cover		Aluminium	Carbon steel - NBR						

Accessories

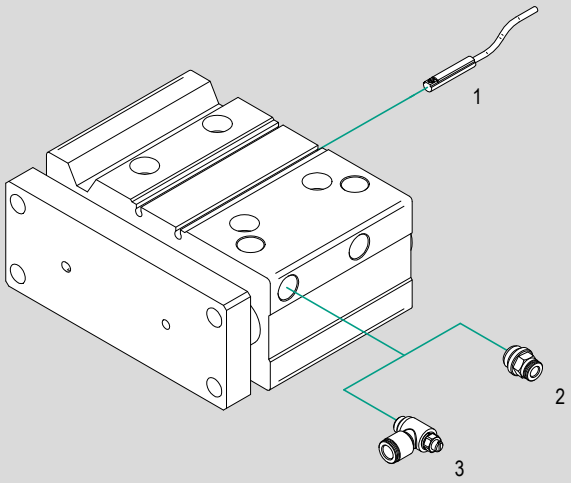

N.	Cylinder bore	Item	Description	Compliance	Matching		Code page	Data sheet page
					GEDB - GEDS	GPB - GPS		
1	Ø 6 ÷ 100	ASC..	Magnetic reed switch C groove		●	●	1.23.90	1.110.30
2	Ø 6 ÷ 100	R..	Push-in fittings	-	●	●	4.2.1	
3	Ø 6 ÷ 100	V..C	Flow controls, for cylinders		●	●	4.94.1	

Key
● matching accessory; – not matching accessory

Main features

6 ÷ 100

Bores Ø

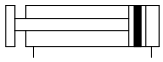

Double acting
Magnetic
With self-lubricating bushings

GEDB

Type

12 ÷ 100

Bores Ø

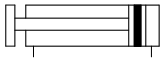

Double acting
Magnetic
With spherical bearings

GEDS

Type



Technical data

Bore Ø mm		6	10	12	16	20	25	32	40	50	63	80	100
Fluid		Filtered compressed air with or without lubrication. Lubrication, if started, must be continued.											
Pressure range		1,5 ÷ 7 bar							1 ÷ 7 bar				
Maximum pressure		9 bar											
Temperature range		0°C ÷ +60°C (standard) -20°C ÷ +150°C (V)											
Speed		50 ÷ 500 mm/s								50 ÷ 350 mm/s			
Port		M3		M5				1/8"		1/4"		3/8"	
Strokes*	GEDB	5 ÷ 15 mm	5 ÷ 20 mm	10 ÷ 100 mm	25 ÷ 200 mm			30 ÷ 250 mm		30 ÷ 150 mm			
	GEDS	-		10 ÷ 100 mm	25 ÷ 200 mm			30 ÷ 250 mm		30 ÷ 150 mm			

*In case of intermediate strokes from the standard strokes (see table below), the cylinder body will have the overall dimensions of the cylinder with the next standard stroke, as desired stroke is obtained by applying a spacer.

Standard strokes

	GEDB Bore Ø mm											
Stroke mm	6	10	12	16	20	25	32	40	50	63	80	100
5	■	■										
10	■	■	■									
15	■	■	■									
20		■	■									
25			■	■	■	■						
30			■	■	■	■	■	■	■	■	■	■
40			■	■	■	■	■	■	■	■	■	■
50			■	■	■	■	■	■	■	■	■	■
75			■	■	■	■	■	■	■	■	■	■
100			■	■	■	■	■	■	■	■	■	■
125				■	■	■	■	■	■	■	■	■
150				■	■	■	■	■	■	■	■	■
175				■	■	■	■	■				
200				■	■	■	■	■				
250							■	■				

	GEDS Bore Ø mm									
Stroke mm	12	16	20	25	32	40	50	63	80	100
5										
10	■									
15	■									
20	■									
25	■	■	■	■						
30	■	■	■	■	■	■	■	■	■	■
40	■	■	■	■	■	■	■	■	■	■
50	■	■	■	■	■	■	■	■	■	■
75	■	■	■	■	■	■	■	■	■	■
100	■	■	■	■	■	■	■	■	■	■
125		■	■	■	■	■	■	■	■	■
150		■	■	■	■	■	■	■	■	■
175		■	■	■	■	■				
200		■	■	■	■	■				
250					■	■				

Key
■ Standard stroke

Theoretical thrust force

Unit: N

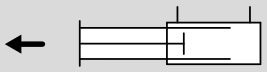

Ø Cylinder (mm)	Ø Rod (mm)	Cylinder Area (cm^2)	Pressure range (bar)						
			1	2	3	4	5	6	7
6	3	0,28	-	5	8	11	14	17	20
10	5	0,79	-	15	23	31	39	47	55
12	6	1,13	-	23	34	45	57	68	79
16	8	2,01	-	40	60	80	101	121	140
20	10	3,14	-	60	90	120	150	180	210
25	12	4,90	-	90	140	190	240	290	340
32	16	8,04	-	160	240	320	400	480	550
40	16	12,56	120	250	370	500	620	750	870
50	20	19,63	190	390	580	780	980	1170	1370
63	20	31,17	310	620	930	1240	1550	1870	2180
80	25	50,20	502	1005	1507	2010	2512	3014	3517
100	25	78,50	785	1570	2355	3140	3925	4710	5495

Theoretical traction force

Unit: N

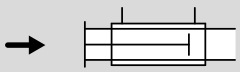

Ø Cylinder (mm)	Ø Rod (mm)	Cylinder Area (cm^2)	Pressure range (bar)						
			1	2	3	4	5	6	7
6	3	0,21	-	4	6	8	10	13	15
10	5	0,59	-	11	17	23	29	35	41
12	6	0,85	-	17	25	34	42	51	59
16	8	1,51	-	30	45	60	76	91	106
20	10	2,35	-	47	71	94	118	141	165
25	12	3,77	-	75	113	151	189	226	263
32	16	6,03	-	121	181	242	302	362	422
40	16	10,55	100	210	310	420	520	630	730
50	20	16,49	160	320	490	650	820	980	1150
63	20	28,03	280	560	840	1120	1400	1680	1960
80	25	45,30	453	907	1360	1813	2267	2720	3173
100	25	73,60	736	1472	2208	2944	3680	4416	5152

Admissible transverse load

Unit: N

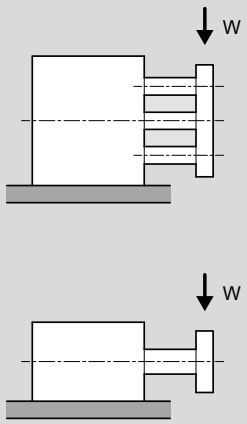

Series	Ø (mm)	Stroke (mm)											
		5	10	15	20	25	30	40	50	75	100	125	150
GEDB	6	0,72	0,61	0,51	-	-	-	-	-	-	-	-	-
GEDS		-	-	-	-	-	-	-	-	-	-	-	-
GEDB	10	2,45	2,05	1,70	1,50	-	-	-	-	-	-	-	-
GEDS		-	-	-	-	-	-	-	-	-	-	-	-
GEDB	12	-	21,0	-	18,0	-	15,0	13,0	12,0	9,0	8,0	-	-
GEDS		-	27,0	-	22,0	-	17,0	21,0	19,0	15,0	13,0	-	-
GEDB	16	-	-	-	-	26,0	-	-	19,0	15,0	13,0	27,0	24,0
GEDS		-	-	-	-	28,0	-	-	33,0	28,0	23,0	20,0	17,0
GEDB	20	-	-	-	-	48,0	-	-	34,0	57,0	49,0	42,0	37,0
GEDS		-	-	-	-	49,0	-	-	65,0	53,0	44,0	30,0	26,0
GEDB	25	-	-	-	-	70,0	-	-	47,0	77,0	65,0	56,0	49,0
GEDS		-	-	-	-	71,0	-	-	72,0	59,0	51,0	42,0	36,0
GEDB	32	-	-	-	-	-	200	-	180	179	156	138	124
GEDS		-	-	-	-	-	160	-	120	190	159	123	106
GEDB	40	-	-	-	-	-	200		180	179	156	138	124
GEDS		-	-	-	-	-	160	-	120	190	159	123	106
GEDB	50	-	-	-	-	-	330	-	286	292	257	230	208
GEDS		-	-	-	-	-	170	-	129	215	181	139	121
GEDB	63	-	-	-	-	-	330	-	286	292	257	230	208
GEDS		-	-	-	-	-	170	-	129	215	181	139	121
GEDB	80	-	-	-	-	370	-	-	304	345	309	280	256
GEDS		-	-	-	-	235	-	-	157	263	226	199	178
GEDB	100	-	-	-	-	539	-	-	470	412	343	278	252
GEDS		-	-	-	-	470	-	-	313	400	332	261	206

Maximum admissible torque

Unit: N·m

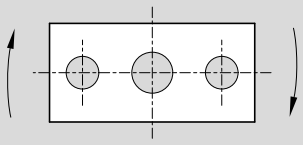

Series	Ø (mm)	Stroke (mm)											
		5	10	15	20	25	30	40	50	75	100	125	150
GEDB	6	0,09	0,073	0,061	-	-	-	-	-	-	-	-	-
GEDS		-	-	-	-	-	-	-	-	-	-	-	-
GEDB	10	0,47	0,39	0,33	0,28	-	-	-	-	-	-	-	-
GEDS		-	-	-	-	-	-	-	-	-	-	-	-
GEDB	12	-	0,40	-	0,30	-	0,28	0,25	0,22	0,45	0,37	-	-
GEDS		-	0,54	-	0,42	-	0,35	0,30	0,27	0,50	0,42	-	-
GEDB	16	-	-	-	-	0,50	-	-	0,36	0,65	0,55	0,40	0,35
GEDS		-	-	-	-	0,70	-	-	0,44	0,82	0,70	0,62	0,58
GEDB	20	-	-	-	-	1,02	-	-	0,78	1,95	1,69	1,49	1,28
GEDS		-	-	-	-	1,28	-	-	0,95	2,23	1,91	1,68	1,47
GEDB	25	-	-	-	-	1,70	-	-	1,31	2,96	2,57	2,26	2,02
GEDS		-	-	-	-	1,35	-	-	1,03	2,42	2,07	1,82	1,60
GEDB	32	-	-	-	-	-	20,0	-	18,0	17,9	15,6	13,8	12,4
GEDS		-	-	-	-	-	16,0	-	12,0	19,0	15,9	12,3	10,6
GEDB	40	-	-	-	-	-	7,10	-	6,42	5,80	6,30	5,50	4,90
GEDS		-	-	-	-	-	3,87	-	3,50	3,10	6,70	5,80	5,10
GEDB	50	-	-	-	-	-	13,6	-	11,4	11,9	10,5	9,40	8,50
GEDS		-	-	-	-	-	5,80	-	4,80	9,30	8,20	7,30	6,60
GEDB	63	-	-	-	-	-	15,0	-	12,5	13,1	11,6	10,4	9,40
GEDS		-	-	-	-	-	6,40	-	5,30	10,3	9,10	8,10	7,30
GEDB	80	-	-	-	-	21,0	-	-	18,0	23,0	21,0	19,0	18,0
GEDS		-	-	-	-	15,0	-	-	23,0	22,0	20,0	18,0	16,0
GEDB	100	-	-	-	-	38,0	-	-	33,0	38,0	33,0	30,0	28,0
GEDS		-	-	-	-	27,0	-	-	30,0	37,0	34,0	31,0	29,0

Non-rotating accuracy

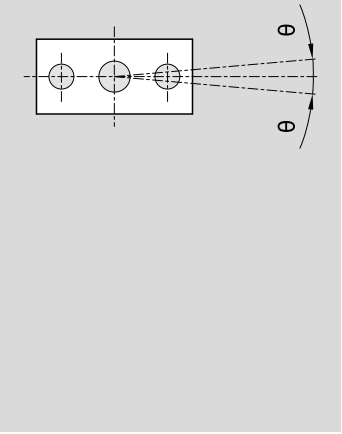

Series	Ø (mm)	Non-rotating accuracy υ
GEDB	6 ÷ 10	±0.2
GEDB	12 ÷ 16	±0.18
GEDS		
GEDB	20 ÷ 25	±0.17
GEDS		
GEDB	32 ÷ 40	±0.16
GEDS		
GEDB	50 ÷ 63	±0.15
GEDS		
GEDB	80 ÷ 100	±0.1
GEDS		

Dimensions

Type: **GEDB**
Ø 6

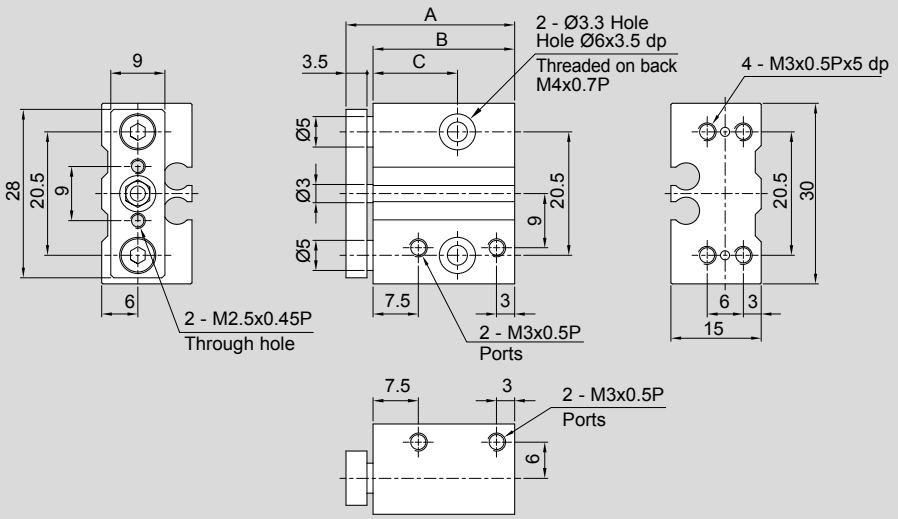

stroke (mm)	5	10	15
A	28	33	38
B	23,5	28,5	33,5
C	14	19	24

Dimensions

Type: **GEDB**
Ø 10

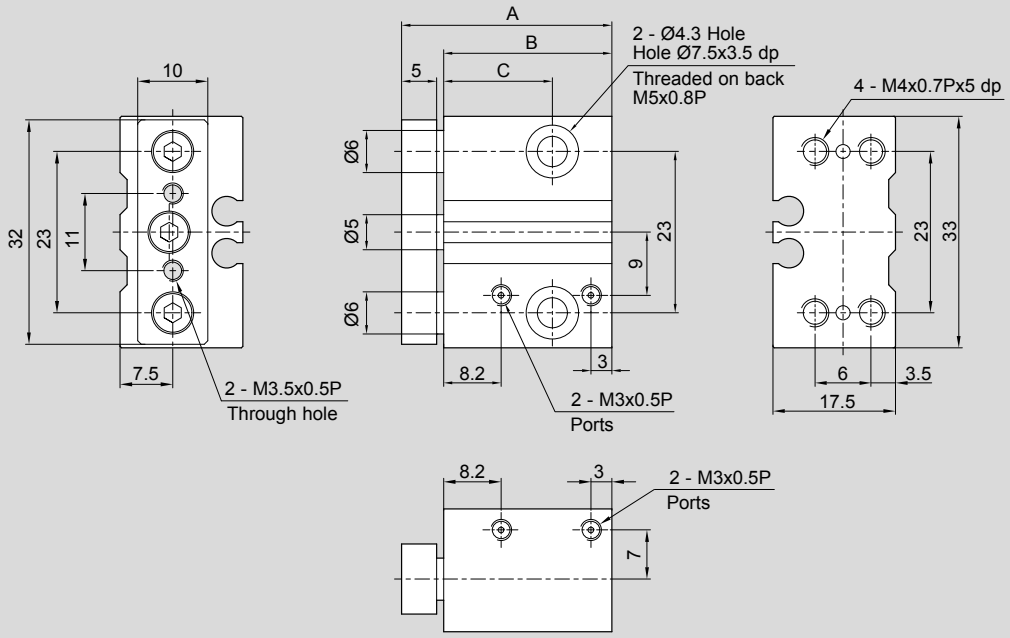

stroke (mm)	5	10	15	20
A	30	35	40	45
B	24	29	34	39
C	15,5	20,5	25,5	30,5

Dimensions

Type: **GEDB, GEDS**
Ø 12

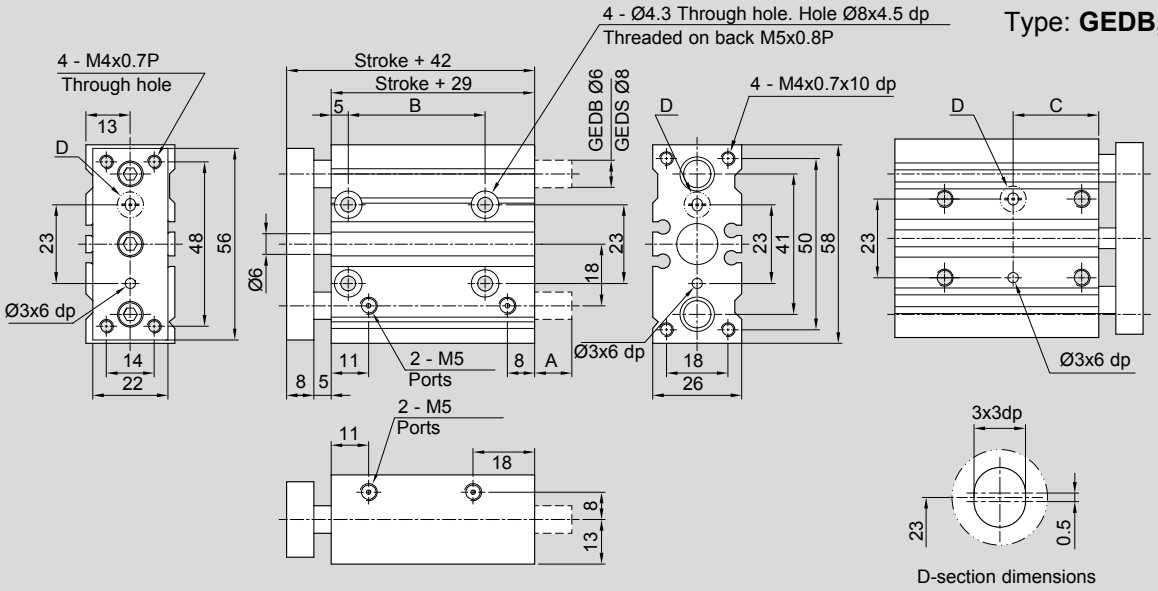

stroke (mm)	10	20	30	40	50	75	100
A	0	0	0	0	0	18,5	18,5
B	20	20	20	40	40	40	40
C	15	15	15	25	25	25	25

Dimensions

Type: **GEDB, GEDS**
Ø 16

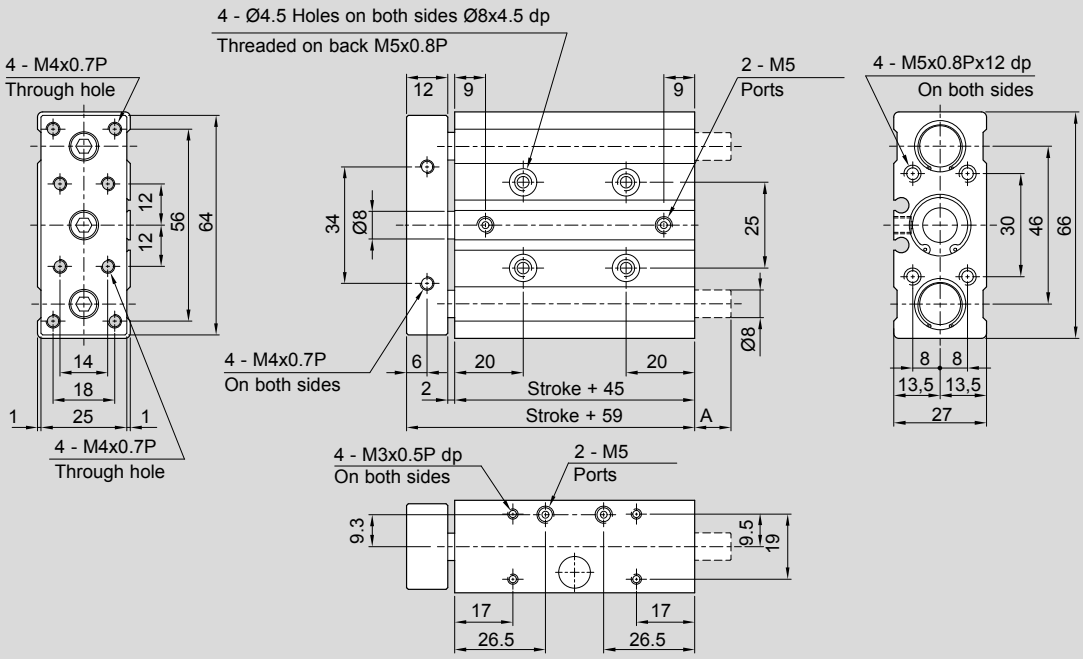

stroke (mm)	25	50	75	100	125	150	175	200
A	0	0	11,5	11,5	11,5	11,5	11,5	11,5

Dimensions

Type: **GEDB, GEDS**
Ø 20

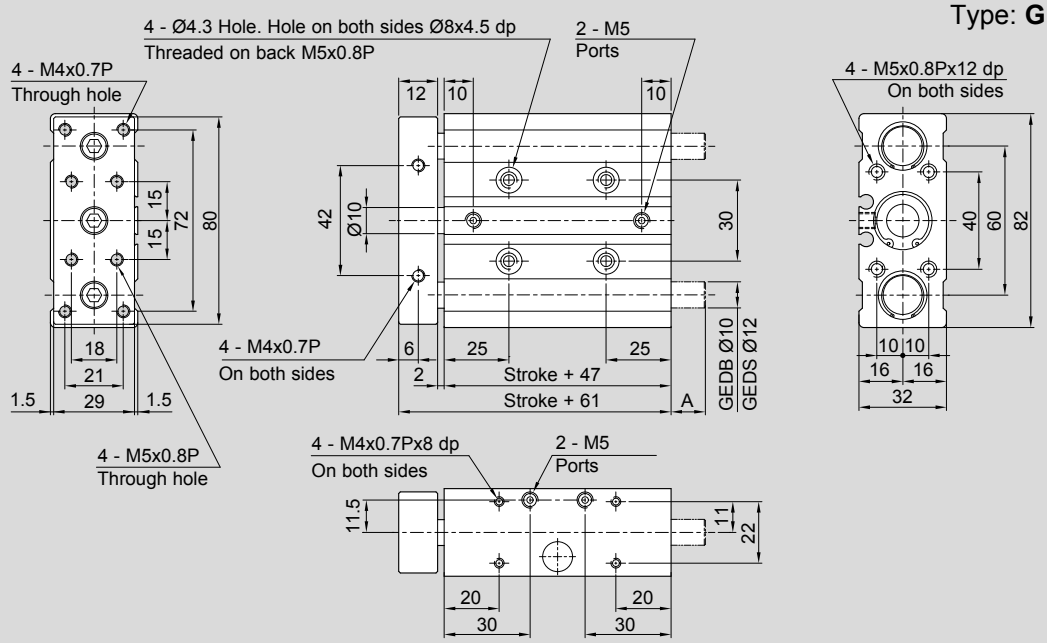

stroke (mm)	25	50	75	100	125	150	175	200
A	0	0	14,9	14,9	14,9	14,9	14,9	14,9

Dimensions

Type: **GEDB, GEDS**
Ø 25

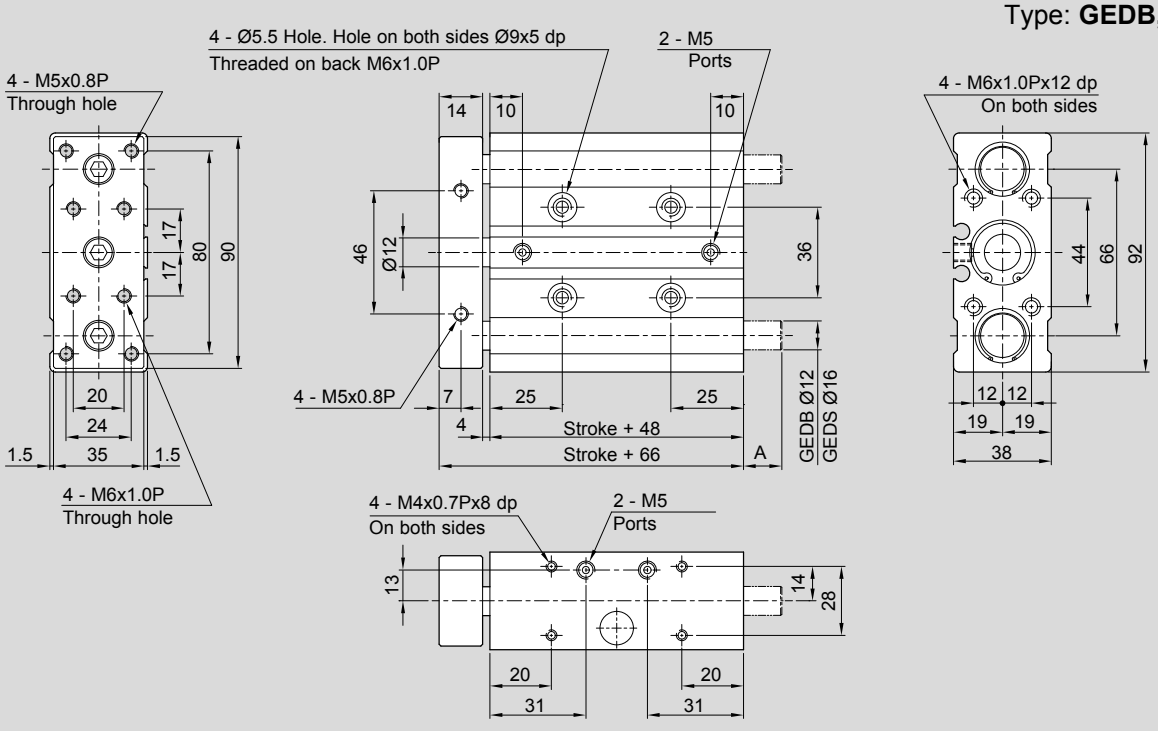

stroke (mm)	25	50	75	100	125	150	175	200
A	0	0	11	11	11	11	11	11

Dimensions

Type: **GEDB, GEDS**
Ø 32

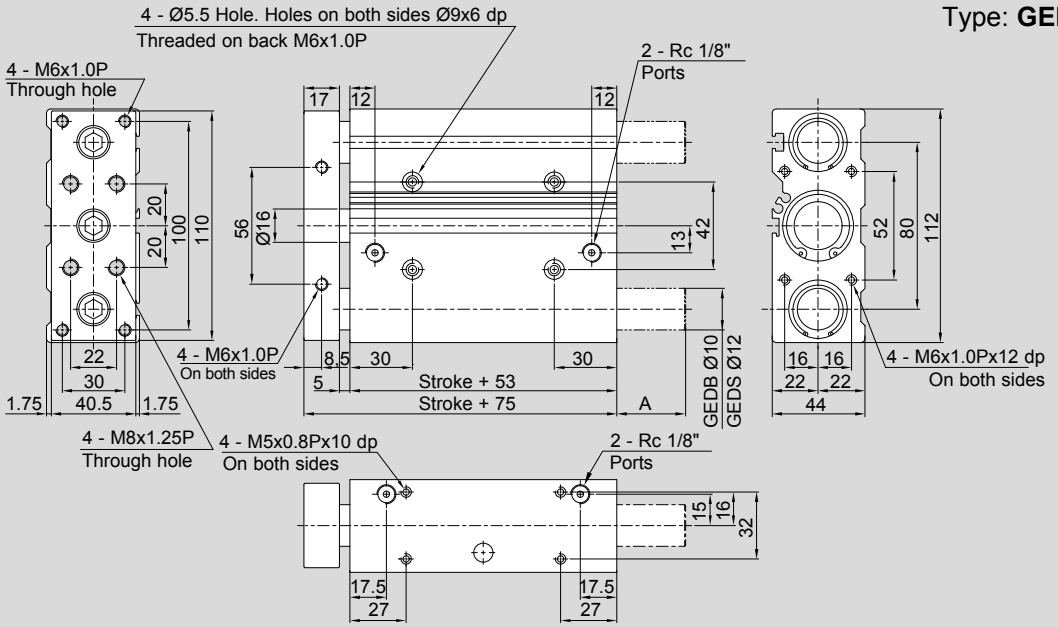

stroke (mm)	30	50	75	100	125	150	175	200	250
A	0	0	34	34	34	34	34	34	34

Dimensions

Type: **GEDB, GEDS**
Ø 40

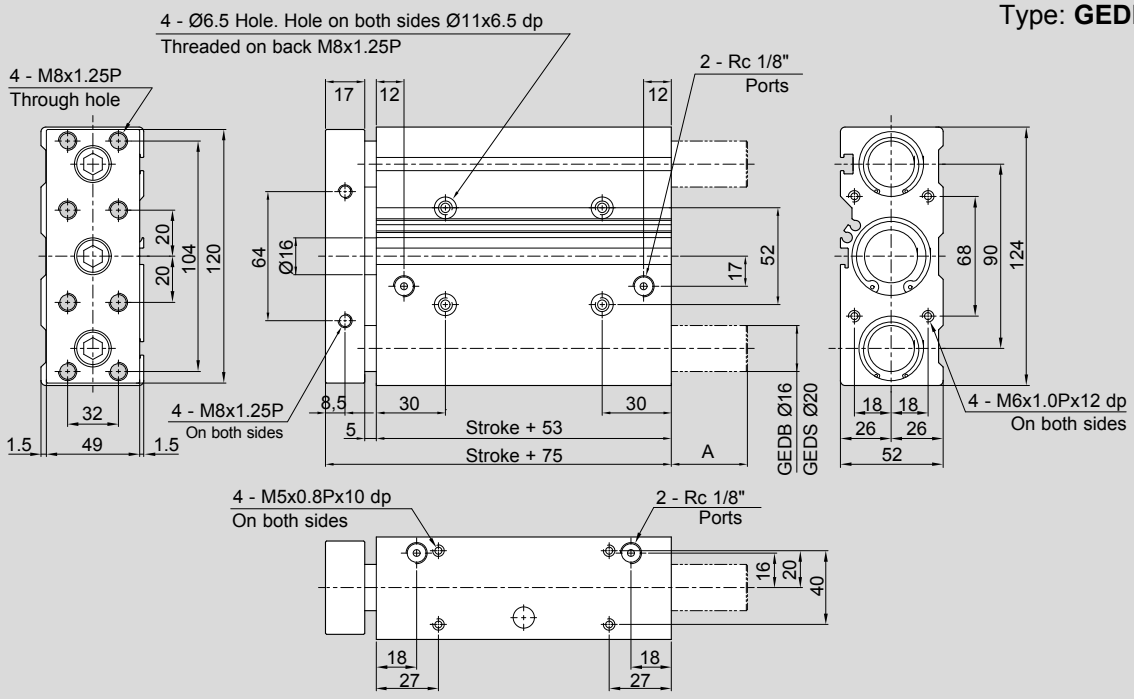

stroke (mm)	30	50	75	100	125	150	175	200	250
A	0	0	33	33	33	33	33	33	33

Dimensions

Type: **GEDB, GEDS**
Ø 50

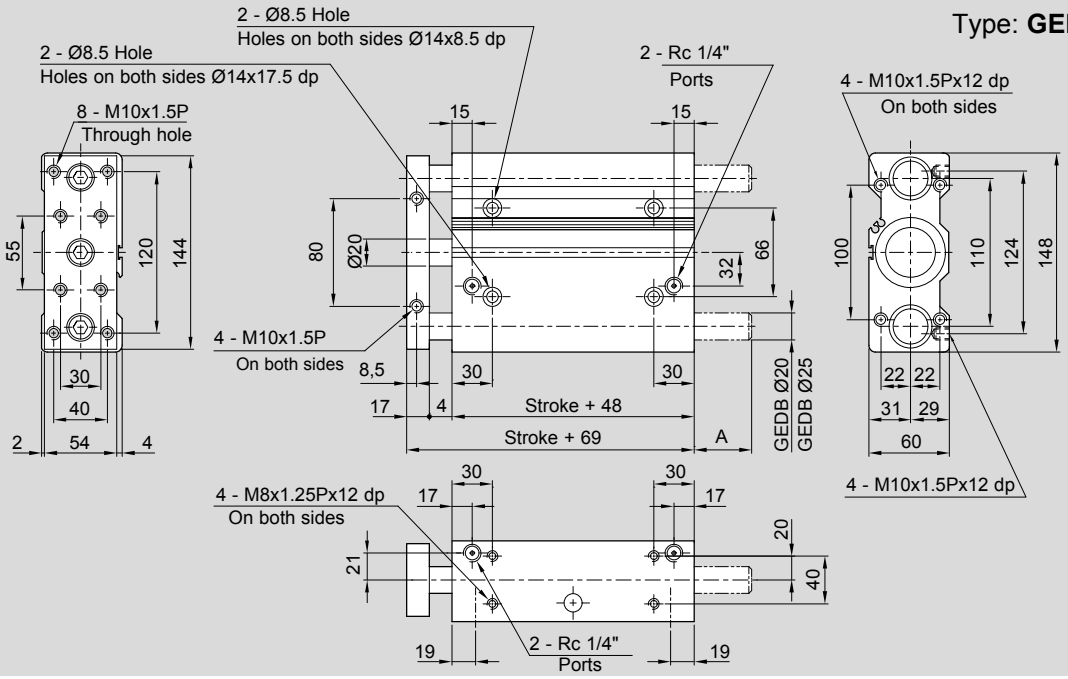

stroke (mm)	30	50	75	100	125	150
A	0	0	0	49	49	49

Dimensions

Type: **GEDB, GEDS**
Ø 63

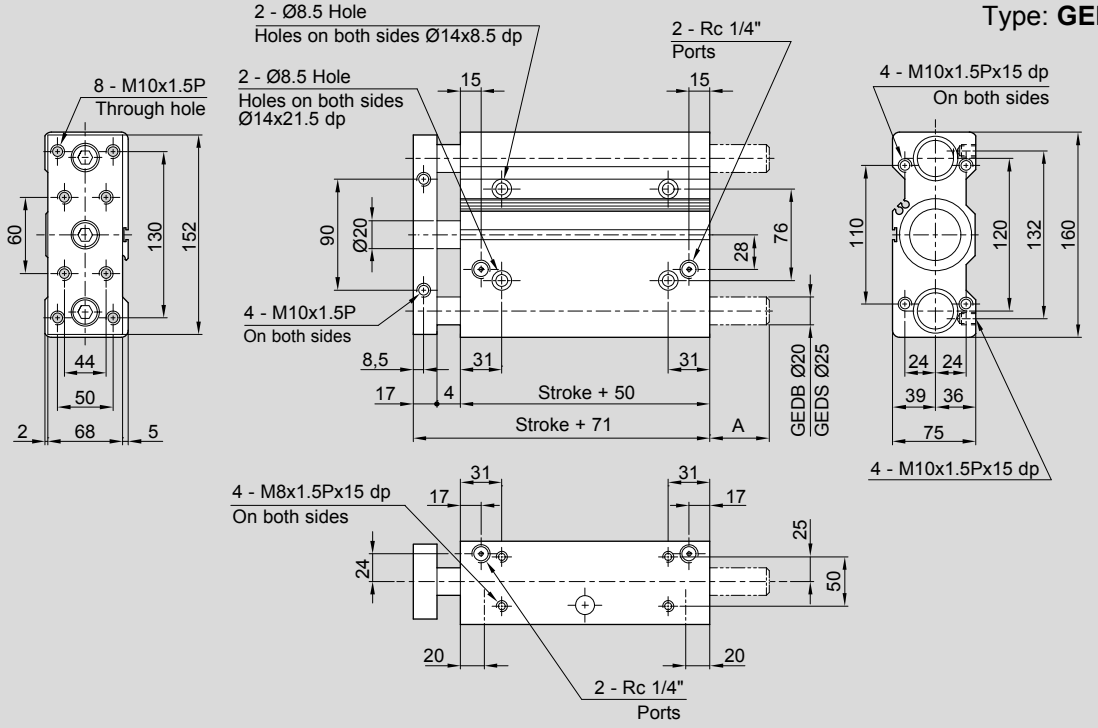

stroke (mm)	30	50	75	100	125	150
A	0	0	0	47	47	47

Dimensions

Type: **GEDB, GEDS**
Ø 80

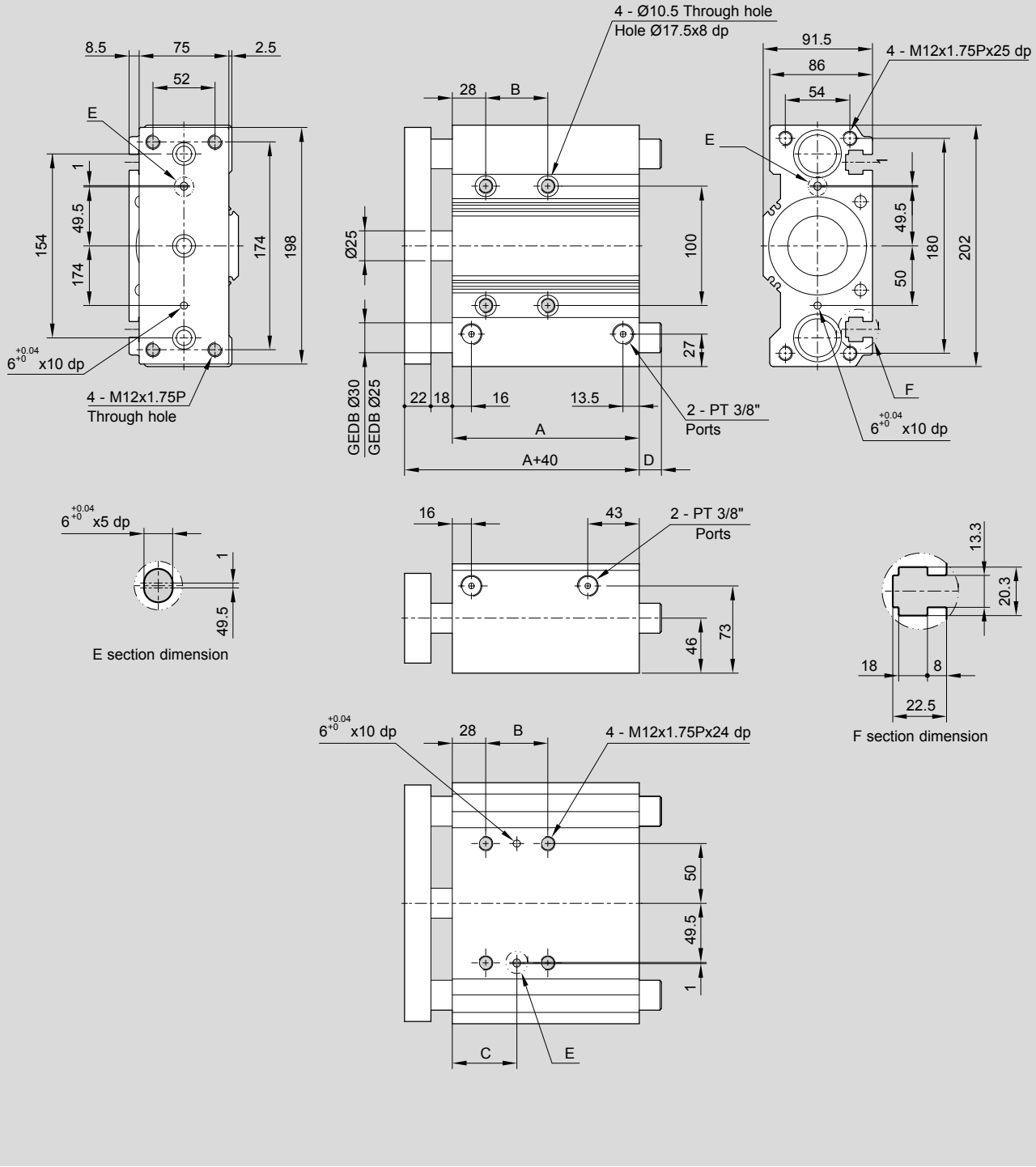

stroke (mm)	30	50	75	100	125	150
A	81,5	106,5	131,5	156,5	181,5	206,5
B	28	52	52	52	128	128
C	42	54	54	54	92	92
D	10	10	63	63	63	63

Dimensions

Type: **GEDB, GEDS**
Ø 100

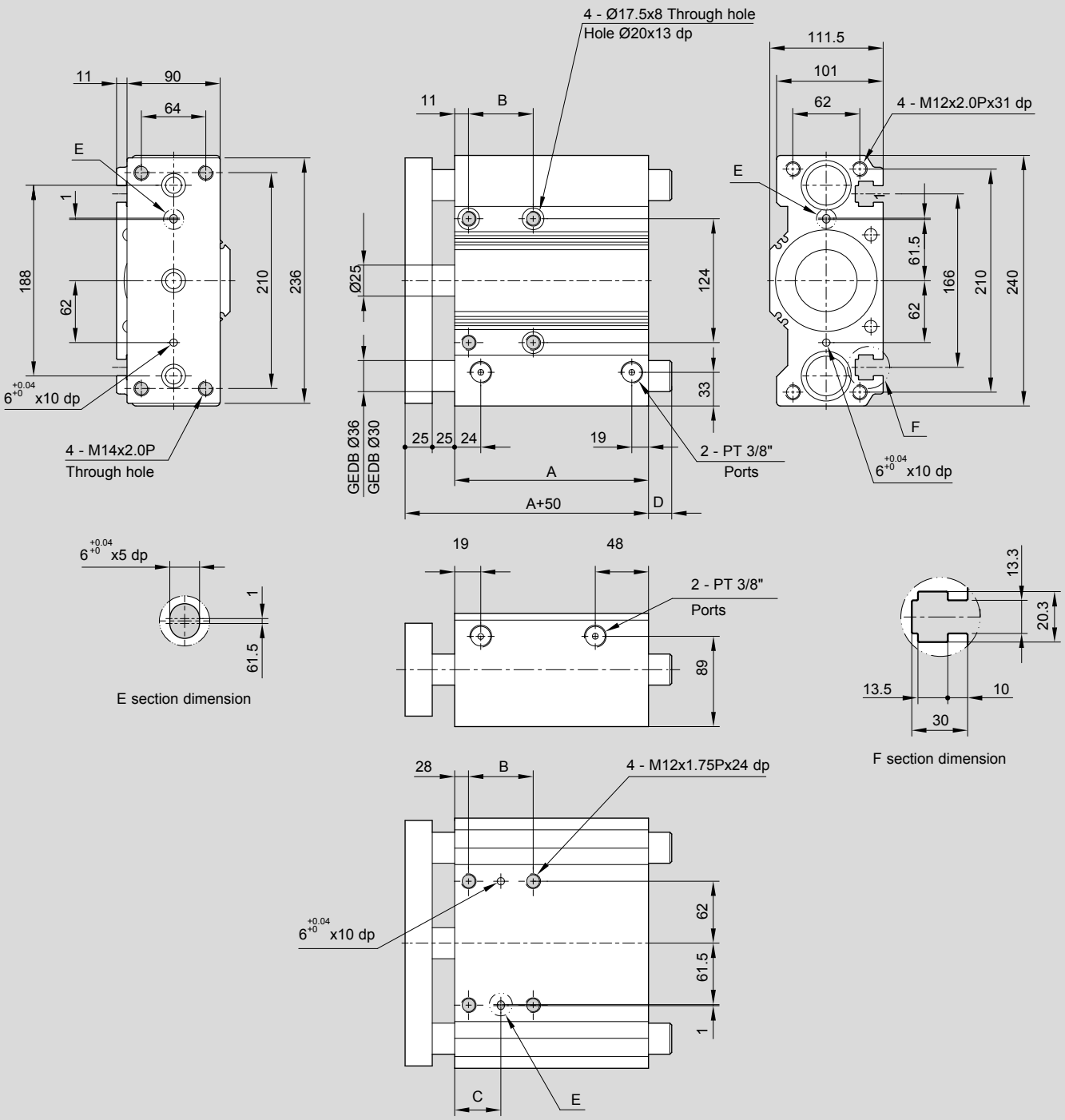

stroke (mm)	30	50	75	100	125	150
A	91	116	141	166	191	216
B	48	72	72	72	148	148
C	35	47	47	47	85	85
D	5	5	64	64	64	64

Compact Guided Cylinders
Series GPB - GPS

Main features

12 ÷ 63
Bores Ø

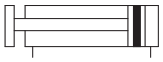

Double acting
Magnetic
With self-lubricating bushings

GPB
Type

12 ÷ 63
Bores Ø

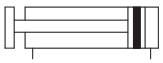

Double acting
Magnetic
With spherical bearings

GPS
Type



Technical data

Bore Ø mm	12	16	20	25	32	40	50	63
Fluid	Filtered compressed air with or without lubrication. Lubrication, if started, must be continued.							
Pressure range	2 ÷ 7 bar							
Temperature range	-10°C ÷ +60°C							
Speed	50 ÷ 500 mm/s						50 ÷ 350 mm/s	
Port	M5		1/8"				1/4"	
Strokes*	10 ÷ 100 mm		20 ÷ 175 mm		25 ÷ 150 mm			

*In case of intermediate strokes from the standard strokes (see table below), the cylinder body will have the overall dimensions of the cylinder with the next standard stroke, as desired stroke is obtained by applying a spacer.

Standard strokes

	GPB Bore Ø mm							
Stroke mm	12	16	20	25	32	40	50	63
10	■	■						
20	■	■	■	■				
25					■	■	■	■
30	■	■	■	■				
40	■	■	■	■				
50	■	■	■	■	■	■	■	■
75	■	■	■	■	■	■	■	■
100	■	■	■	■	■	■	■	■
125			■	■	■	■	■	■
150			■	■	■	■	■	■
175			■	■				

	GPS Bore Ø mm							
Stroke mm	12	16	20	25	32	40	50	63
10	■	■						
20	■	■	■	■				
25					■	■	■	■
30	■	■	■	■				
40	■	■	■	■				
50	■	■	■	■	■	■	■	■
75	■	■	■	■	■	■	■	■
100	■	■	■	■	■	■	■	■
125			■	■	■	■	■	■
150			■	■	■	■	■	■
175			■	■				

Key
■ Standard stroke

Theoretical thrust force

Unit: N

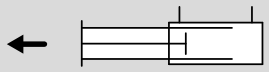

Ø Cylinder (mm)	Ø Rod (mm)	Cylinder Area (cm^2)	Pressure range (bar)					
			2	3	4	5	6	7
12	6	1,13	23	34	45	57	68	79
16	8	2,01	40	60	80	101	121	141
20	10	3,14	63	94	126	157	188	220
25	12	4,91	98	147	196	245	295	344
32	16	8,04	161	241	322	402	483	563
40	16	12,57	251	377	503	628	754	880
50	20	19,63	393	589	785	982	1178	1374
63	20	31,17	623	935	1247	1559	1870	2182

Theoretical traction force

Unit: N

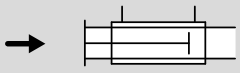

Ø Cylinder (mm)	Ø Rod (mm)	Cylinder Area (cm^2)	Pressure range (bar)					
			2	3	4	5	6	7
12	6	1,13	17	25	34	42	51	59
16	8	2,01	30	45	60	75	90	106
20	10	3,14	47	71	94	118	141	165
25	12	4,91	76	113	151	189	227	264
32	16	8,04	121	181	241	302	362	422
40	16	12,57	211	317	422	528	633	739
50	20	19,63	330	495	660	825	990	1155
63	20	31,17	561	841	1121	1402	1682	1962

Dimensions

Type: **GPB, GPS**
Ø 12 ÷ 25

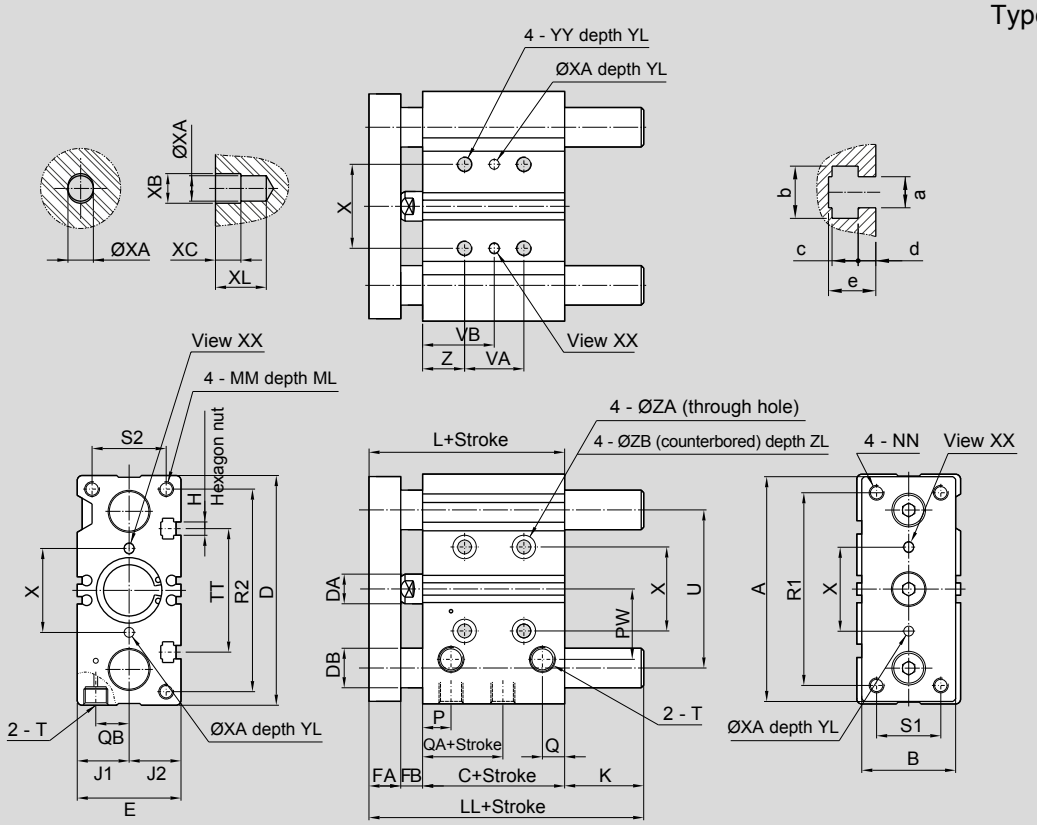

Ø (mm)	A	B	C	D	DA	DB		E	FA	FB	H	J_1	J_2	L	MM	ML	NN	T	P	Q	a	b	c	d	e
						GPB	GPS																		
12	56	22	29	58	6	8	6	26	8	5	M4	13	13	42	M4	10	M4	M5	11	7.5	4,4	7,4	3,7	2	6,2
16	62	25	33	64	8	10	8	30	8	5	M4	15	15	46	M5	12	M5	M5	11	8	4,4	7,4	3,7	2,5	6,7
20	81	30	37	83	10	12	10	36	10	6	M5	18	18	53	M5	13	M5	1/8"	11.5	9	5,4	8,4	4,5	2,3	7,3
25	91	38	37.5	93	12	16	12	42	10	6	M5	21	21	53.5	M6	15	M6	1/8"	11.5	9	5,4	8,4	4,5	3	8,2

Ø (mm)	QA	QB	PW	TT	U	VA			VB			S_1	S_2	R_1	R_2	X ±0,02	XA H_7	XB	XC
						stroke 10÷30	stroke 40÷100	stroke 125÷175	stroke 10÷30	stroke 40÷100	stroke 125÷175								
12	12	7.5	18	37	41	20	40	-	15	25	-	14	18	48	50	23	3	3.5	3
16	14	10	19	38	46	24	44	-	17	27	-	16	22	54	56	24	3	3.5	3
20	12.5	11.5	25	44	54	24	44	120	29	39	77	18	24	70	72	28	3	3.5	3
25	12.5	13.5	28.5	50	64	24	44	120	29	39	77	26	30	78	82	34	4	4.5	3

Ø (mm)	XL	YY	YL	Z	ZA	ZB	ZL	K					LL				
								GPB		GPS			GPB		GPS		
								stroke 10÷50	stroke 75÷100	stroke 10÷30	stroke 40÷100	stroke 125÷175	stroke 10÷50	stroke 75÷100	stroke 10÷30	stroke 40÷100	stroke 125÷175
12	6	M5	10	5	4.3	8	4.5	0	15	0	15	-	42	57	42	57	-
16	6	M5	10	5	4.3	8	4.5	0	22	0	22	-	46	68	46	68	-
20	6	M6	12	17	5.6	9.5	5	0	28	0	28	52	53	81	53	81	105
25	6	M6	12	17	5.6	9.5	5.5	0	29	0	31	50	53.5	82.5	53.5	84.5	103.5

Dimensions

Type: **GPB, GPS**
Ø 32 ÷ 63

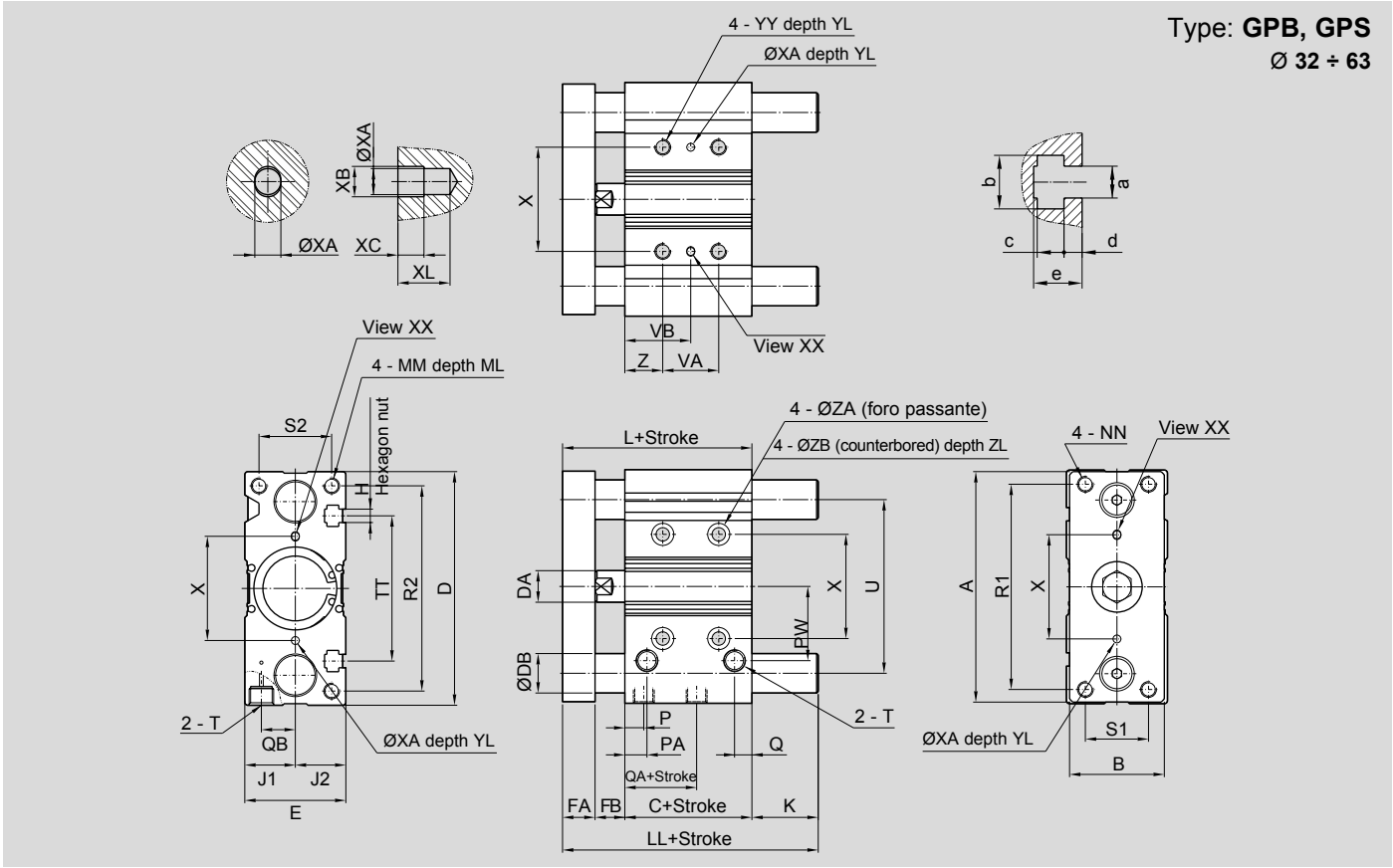

Ø (mm)	A	B	C	D	DA	DB		E	FA	FB	H	J_1	J_2	L	MM	ML	NN	T	P	Q	a	b	c	d	e
						GPB	GPS																		
32	110	44	37.5	112	16	20	16	48	12	10	M6	24	24	59.5	M8	20	M8	1/8"	11.5	10	6.5	10.5	5.35	3.5	9.5
40	118	44	44	120	16	20	16	54	12	10	M6	27	27	66	M8	20	M8	1/8"	14	11	6.5	10.5	5.35	4	11
50	146	60	44	148	20	25	20	64	16	12	M8	32	32	72	M10	22	M10	1/4"	12	11	8.5	13.5	7.5	4.5	13.5
63	158	70	49	162	20	25	20	78	16	12	M10	39	39	77	M10	22	M10	1/4"	16.5	13	11	17.8	10	7	18.5

Ø (mm)	QA	QB	PA	PW	TT	U	VA			VB			S_1	S_2	R_1	R_2	X ±0,02	XA H_7	XB
							stroke 25÷40	stroke 50÷100	stroke 125÷175	stroke 25÷40	stroke 50÷100	stroke 125÷175							
32	5	16.5	11.5	34	63	78	24	48	124	33	45	83	30	34	96	98	42	4	4.5
40	11	18	14	38	72	86	24	48	124	34	46	84	30	40	104	106	50	4	4.5
50	9	21.5	14	47	92	110	24	48	124	36	48	86	40	46	130	130	66	5	6
63	14	28	16.5	55	110	124	28	52	128	38	50	88	50	58	130	142	80	5	6

Ø (mm)	XC	XL	YY	YL	Z	ZA	ZB	ZL	K					LL				
									GPB		GPS			GPB		GPS		
									stroke 25÷50	stroke 75÷175	stroke 25÷50	stroke 75÷100	stroke 125÷175	stroke 25÷50	stroke 75÷175	stroke 25÷50	stroke 75÷100	stroke 125÷175
32	3	6	M8	16	21	6.5	11	7.5	8	45	8	45	65	67.5	104.5	67.5	104.5	124.5
40	3	6	M8	16	22	6.5	11	7.5	1.5	38.5	1.5	38.5	58.5	67.5	104.5	67.5	104.5	124.5
50	4	8	M10	20	24	8.5	14	9	6.5	48.5	6.5	48.5	68.5	78.5	120.5	78.5	120.5	140.5
63	4	8	M10	20	24	8.5	14	9	1.5	43.5	1.5	43.5	63.5	78.5	120.5	78.5	120.5	140.5

Magnetic reed switch C groove ASC..

	For cylinder Ø mm	Code	Item	Cylinder matching
	6 ÷ 100	070248	ASC1C525	GEDB GEDS GPB GPS
		070249	ASC7N2M8	
		070382	ASC7M2M8	

TWIN ROD
Cylinders



Find out our
key products

- **Solution for most applications**
- **Easy and intuitive choice**
- **Excellent value for money**
- **Wide availability**
- **Fast delivery**

Features and certifications

Series of twin rod cylinders, available in bores from Ø 6 to 32, double acting, magnetic, with self-lubricating bushings or with spherical bearings. These cylinders are of double rod with double thrust force and smooth and precise operation.
Supplied as standard in compliance with Reach and RoHS directives.

Type GSB Ø 6 ÷ 32

from page 1.24.20



Twin rod cylinders, available in bores from Ø 6 to 32, double acting, magnetic, with self-lubricating bushings .
These cylinders are double rod with double thrust force and smooth and precise operation. The extruded body is machined with grooves allowing the mounting of magnetic reed switches directly, not protruding beyond the profile of the cylinder, and elastic dampers on front and end covers.

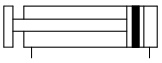

Type GSS Ø 6 ÷ 32

from page 1.24.20



Twin rod cylinders, available in bores from Ø 6 to 32, double acting, magnetic, with spherical bearings.
These cylinders are double rod with double thrust force and smooth and precise operation. The extruded body is machined with grooves allowing the mounting of magnetic reed switches directly, not protruding beyond the profile of the cylinder, and elastic dampers on front and end covers.

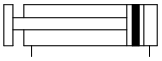

Options

Description	Symbol	Suffix
Special versions on request		**/S**

Code key

Bore	/	Stroke	Type	/	Special version
32	**/**	**50**	**GSB**	**/**	

- **32** → Ø 6, 10, 16, 20, 25, 32
- **50** → See table on page 1.24.20
- **GSB** → GSB: Double acting, Magnetic, With self-lubricating bushings
- **GSB** → GSS: Double acting, Magnetic, With spherical bearings
- **Special version** → S

How to order

Bore		Stroke	Type
32	**/**	**50**	**GSB**

Notes

For further information on options see the table above.

Standard materials

Type: **GSB, GSS**

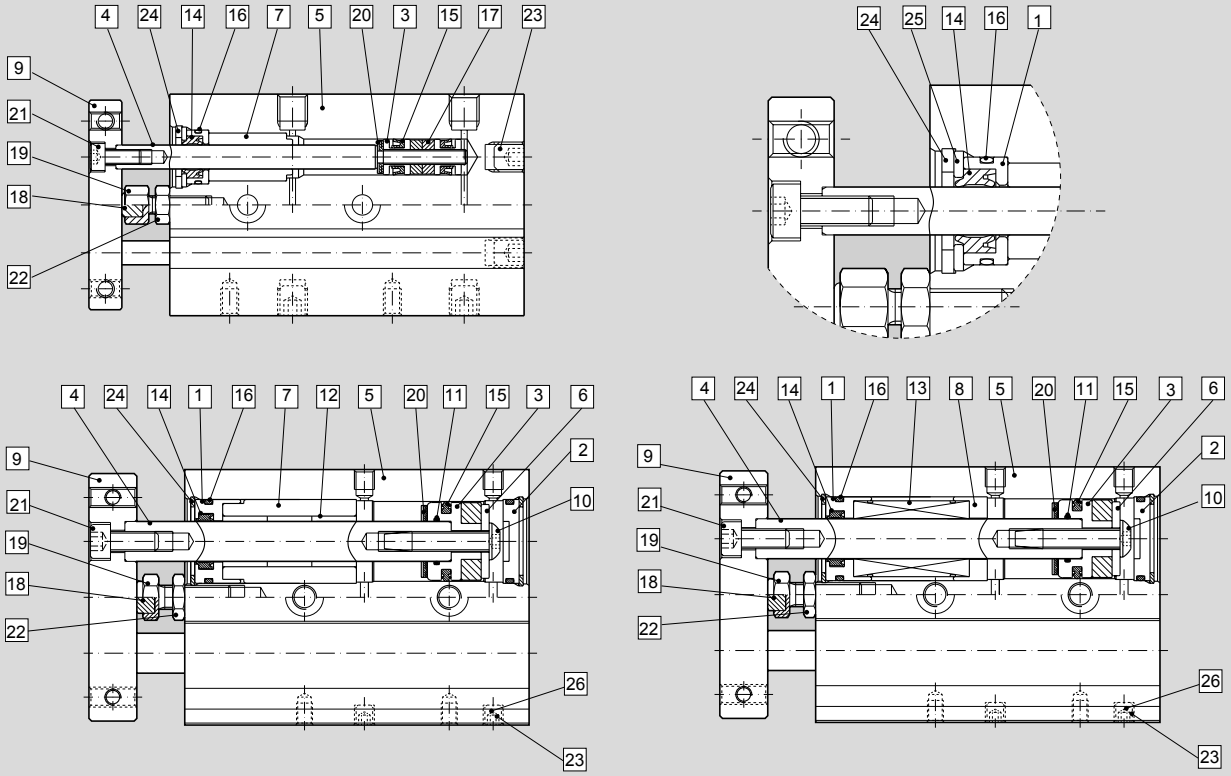

Position	Description	Materials					
		GSB			GSS		
		Ø 6	Ø 10	Ø 16 ÷ 32	Ø 6	Ø 10	Ø 16 ÷ 32
1	Front head cover	Hard anodised aluminium					
2	Rear covers	Hard anodised aluminium					
3	Piston	Brass	Aluminium		Brass	Aluminium	
4	Piston rod	Stainless Steel		Carbon steel	Special steel		
5	Cylinder barrel	Hard anodised aluminium					
6	Magnet holder	Stainless Steel					
7	Support	Brass	Aluminium		Brass	Aluminium	
8	Support	Brass	Aluminium		Brass	Aluminium	
9	Guide plate	Hard anodised aluminium					
10	Nut	Nickel-plated carbon steel					
11	O-ring	NBR					
12	Oilless bearing	Oil-impregnated sintered alloy					
13	Linear bearing	Special steel					
14	Rod packing	Polyurethane (PU)					
15	Piston packing	NBR					
16	Cylinder gasket	NBR					
17	Magnet	Magnetic material					
18	Elastic dampers	NBR					
19	Adjusting screw	Stainless Steel					
20	Rubber lining	NBR					
21	Screw	Nickel-plated carbon steel					
22	Lock nut	Nickel-plated carbon steel					
23	Seat screw	Carbon steel					
24	Retaining ring	Nickel-plated carbon steel					
25	Steel pad	Stainless Steel					
26	Port gasket	NBR					

Accessories

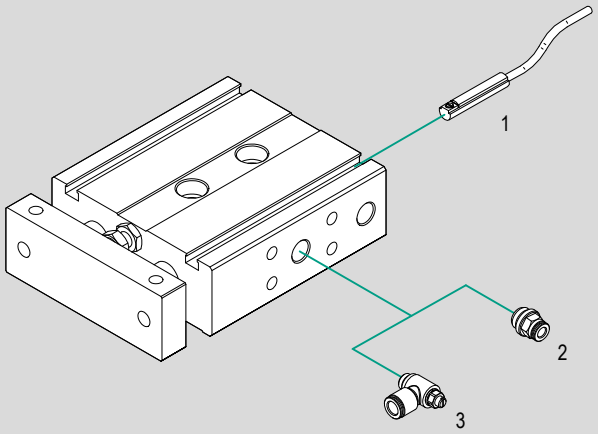

N.	Cylinder bore	Item	Description	Compliance	Matching		Code page	Data sheet page
					GSB	GSS		
1	Ø 6 ÷ 32	ASV..	Magnetic reed switch T groove	-	●	●	1.24.90	1.110.10
2	Ø 6 ÷ 32	R..	Push-in fittings		●	●	4.2.1	
3	Ø 6 ÷ 32	V..C	Flow controls, for cylinders		●	●	4.94.1	

Key
● matching accessory; – not matching accessory

Twin Rod Cylinders
Series GSB - GSS

Main features

6 ÷ 32
Bores Ø

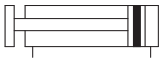

Double acting
Magnetic
With self-lubricating bushings

GSB
Type



6 ÷ 32
Bores Ø

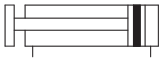

Double acting
Magnetic
With spherical bearings

GSS
Type



Technical data

Bore Ø mm	6	10	16	20	25	32
Fluid	Filtered compressed air with or without lubrication. Lubrication, if started, must be continued.					
Pressure range	1,5 ÷ 7 bar	1 ÷ 7 bar		0,5 ÷ 7 bar		
Temperature range	-10°C ÷ +60°C					
Speed	30 ÷ 300 mm/s		30 ÷ 500 mm/s			
Port	M5				1/8"	
Strokes*	10 ÷ 50 mm		10 ÷ 150 mm			
Adjustable stroke	0 ÷ -5 mm					

Standard strokes

	GSB Bore Ø mm					
Stroke mm	6	10	16	20	25	32
10						
15						
20						
25						
30						
35						
40						
45						
50						
60						
70						
75						
80						
90						
100						
125						
150						

	GSS Bore Ø mm					
Stroke mm	6	10	16	20	25	32
10						
15						
20						
25						
30						
35						
40						
45						
50						
60						
70						
75						
80						
90						
100						
125						
150						

Key
Standard stroke

Dimensions

Type: **GSB, GSS**
Ø 6

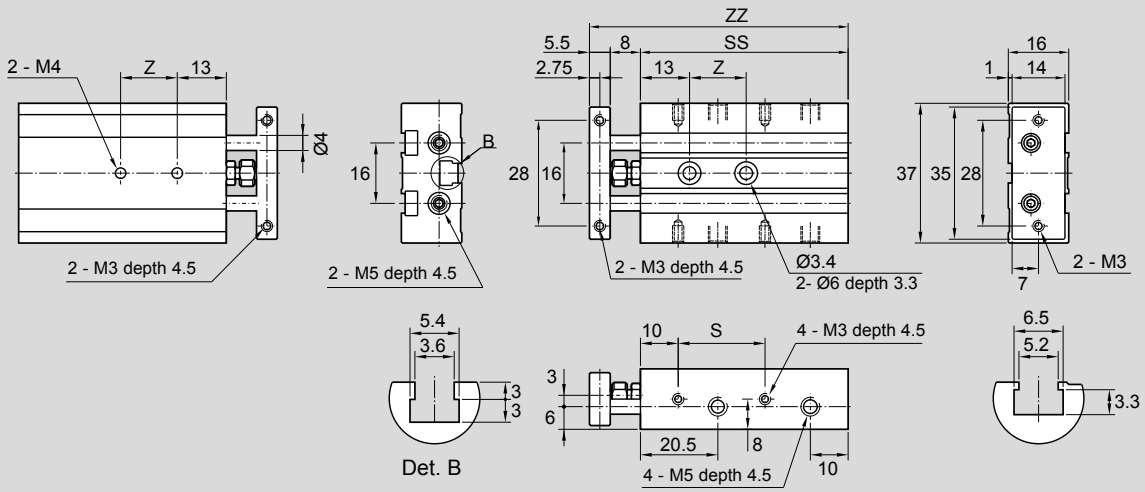

Ø (mm)	S					Z					SS					ZZ				
	stroke 10	stroke 20	stroke 30	stroke 40	stroke 50	stroke 10	stroke 20	stroke 30	stroke 40	stroke 50	stroke 10	stroke 20	stroke 30	stroke 40	stroke 50	stroke 10	stroke 20	stroke 30	stroke 40	stroke 50
6	23	33	43	53	63	15	20	25	30	35	55	65	75	85	95	68,5	78,5	88,5	98,5	108,5

Dimensions

Type: **GSB, GSS**
Ø 10 ÷ 16

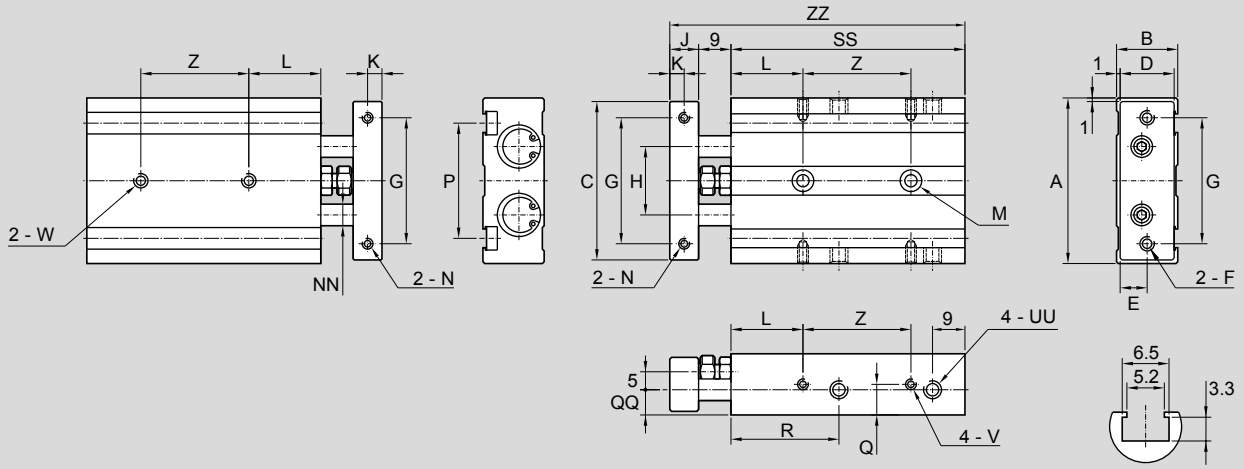

Ø (mm)	A	B	C	D	E	F	G	H	K	J	L	M	N	NN Ø	P	Q	QQ	R	W	V	UU
10	46	17	44	15	7.5	M4	35	19	4	8	20	Ø 3.4 - Ø 6 depth 3.3	M3 depth 5	Ø 6	32	8.5	7	30	M4 depth 8	M3 depth 4.5	M5 depth 4.5
16	58	20	56	18	9	M5	45	24	5	10	30	Ø 4.3 - Ø 8 depth 4.4	M4 depth 6	Ø 8	47	10	10	36	M5 depth 9	M4 depth 5	M5 depth 5.5

Ø (mm)	SS															
	stroke 10	stroke 15	stroke 20	stroke 25	stroke 30	stroke 35	stroke 40	stroke 45	stroke 50	stroke 60	stroke 70	stroke 75	stroke 80	stroke 90	stroke 100	stroke 125	stroke 150
10	65	70	75	80	85	90	95	100	105	-	-	-	-	-	-	-	-
16	70	75	80	85	90	95	100	105	110	120	130	135	140	150	160	185	210

Ø (mm)	Z															
	stroke 10	stroke 15	stroke 20	stroke 25	stroke 30	stroke 35	stroke 40	stroke 45	stroke 50	stroke 60	stroke 70	stroke 75	stroke 80	stroke 90	stroke 100	stroke 125	stroke 150
10	30	30	30	30	40	40	40	40	40	-	-	-	-	-	-	-	-
16	25	25	25	25	35	35	35	35	35	45	45	45	45	55	55	80	80

Ø (mm)	ZZ															
	stroke 10	stroke 15	stroke 20	stroke 25	stroke 30	stroke 35	stroke 40	stroke 45	stroke 50	stroke 60	stroke 70	stroke 75	stroke 80	stroke 90	stroke 100	stroke 125	stroke 150
10	82	87	92	97	102	107	112	117	122	-	-	-	-	-	-	-	-
16	89	94	99	104	109	114	119	124	129	139	149	154	159	169	179	204	229

Dimensions

Type: **GSB, GSS**
Ø 20 ÷ 32

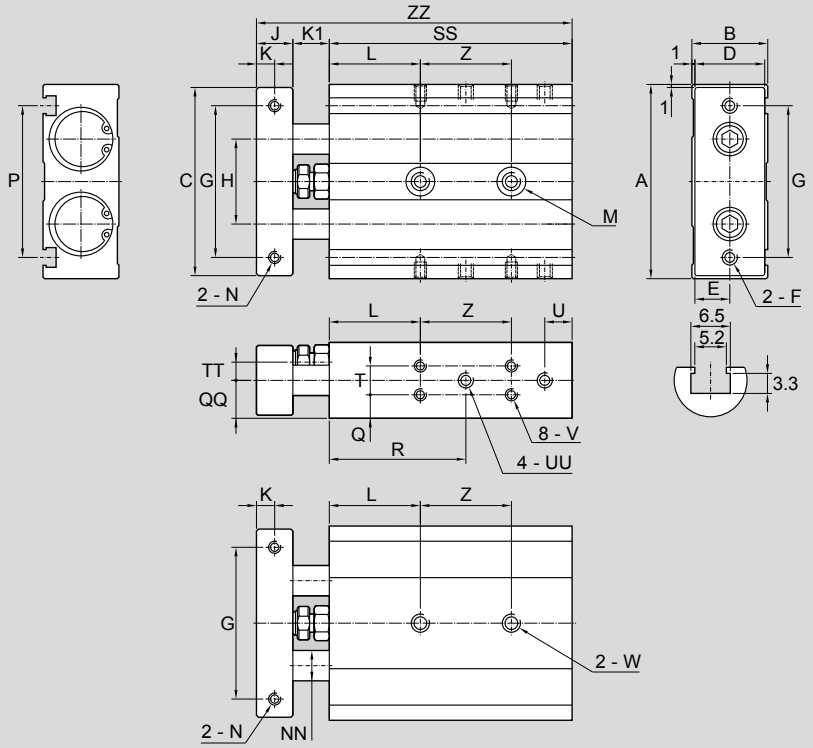

Ø (mm)	A	B	C	D	E	F	G	H	K	J	K1	L	M
20	64	25	62	23	11.5	M5	50	28	6	12	12	30	Ø 5.5 - Ø 9.5 depth 5.4
25	80	30	78	28	14	M6	60	35	6	12	12	30	Ø 6.8 - Ø 11 depth 6.3
32	98	38	96	36	18	M6	75	44	8	16	14	30	Ø 6.8 - Ø 11 depth 6.3

Ø (mm)	N	NN Ø	P	Q	QQ	R	T	TT	U	UU	V	W
20	M4 depth 7.5dp	10	50	7.75	12.5	45	9.5	6	9	M5	M4 depth 5.5	M6 depth 10dp
25	M5 depth 7.5dp	12	60	8.5	15	44.5	13	9	10	1/8”	M5 depth 7.5	M8 depth 16dp
32	M5 depth 10dp	16	74	9	19	52.5	20	11	12	1/8”	M5 depth 7.5	M8 depth 16dp

Ø (mm)	SS																
	stroke 10	stroke 15	stroke 20	stroke 25	stroke 30	stroke 35	stroke 40	stroke 45	stroke 50	stroke 60	stroke 70	stroke 75	stroke 80	stroke 90	stroke 100	stroke 125	stroke 150
20	80	85	90	95	100	105	110	115	120	130	140	145	150	160	170	195	220
25	82	87	92	97	102	107	112	117	122	132	142	147	152	162	172	197	222
32	92	97	102	107	112	117	122	127	132	142	152	157	162	172	182	207	232

Ø (mm)	Z																
	stroke 10	stroke 15	stroke 20	stroke 25	stroke 30	stroke 35	stroke 40	stroke 45	stroke 50	stroke 60	stroke 70	stroke 75	stroke 80	stroke 90	stroke 100	stroke 125	stroke 150
20	30	30	30	30	40	40	40	40	40	60	60	60	60	60	60	85	85
25	30	30	30	30	40	40	40	40	40	60	60	60	60	60	60	85	85
32	40	40	40	40	50	50	50	50	50	70	70	70	70	70	70	95	95

Ø (mm)	ZZ																
	stroke 10	stroke 15	stroke 20	stroke 25	stroke 30	stroke 35	stroke 40	stroke 45	stroke 50	stroke 60	stroke 70	stroke 75	stroke 80	stroke 90	stroke 100	stroke 125	stroke 150
20	104	109	114	119	124	129	134	139	144	154	164	169	174	184	194	219	244
25	106	111	116	121	126	131	136	141	146	156	166	171	176	186	196	221	246
32	122	127	132	137	142	147	152	157	162	172	182	187	192	202	212	237	262

Magnetic reed switch T groove ASV..



For cylinder Ø mm	Code	Item	Cylinder matching
6 ÷ 32	070946	ASV1C525	GSB GSS
	071863	ASV1C550	
	071864	ASV1C51K	
	071189	ASV1C5M8	
	073639	ASV4D225	
	070246	ASV4D2M8	
	074900	ASV7N225	
	070247	ASV7N2M8	
	070372	ASV7M2M8	
	072918	ASV1H525	

RODLESS
Cylinders



Find out our
key products

- **Solution for most applications**
- **Easy and intuitive choice**
- **Excellent value for money**
- **Wide availability**
- **Fast delivery**

Features and certifications

Series of rodless cylinders, double acting, magnetic, available in bores from Ø 18 to 63. Characterized by the absence of the rod and with a direct power transmission to the yoke, and equipped with newly developed adjustable dampers on both sides. The flow rate can be adjusted from 0 to 100% by turning a pin of an angle of 90°. The new barrel with huge deflection resistance, is provided with grooves for mounting various accessories. Magnetic reed switches can be mounted by a bracket or directly in the grooves, not protruding beyond the profile of the cylinder.
Supplied as standard in compliance with Reach and RoHS directives.

RoHS

REACH compliant

Type S1 Ø 18 ÷ 63

from page 1.26.20



Rodless standard cylinders, available in bores from Ø 18 to 63, double acting, magnetic. Adjustable flow rate, dampers and newly developed tube.

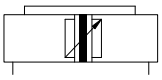

Type S2 Ø 18 ÷ 63

from page 1.26.20



Rodless short standard cylinders, available in bores from Ø 18 to 63, double acting, magnetic. In comparison with type S1, at 0 stroke, has reduced dimension around 42%, so the cylinder is more compact and economic, but suitable for lighter loads.

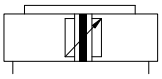

Type S3 Ø 18 ÷ 63

from page 1.26.40



Rodless guided cylinders, available in bores from Ø 18 to 63, double acting, magnetic. The side carriage (which can also be mounted at a later date), is adjustable and allows the cylinder to be used with heavier loads than type S1 and S2. The guide moves by PTFE slides, fixed in the grooves of the barrel.

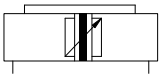

Type S5 Ø 18 ÷ 63

from page 1.26.40



Rodless short guided cylinders, available in bores from Ø 18 to 63, double acting, magnetic. The side carriage (which can also be mounted at a later date), is adjustable and allows the cylinder to be used with heavier loads than type S1 and S2. The guide moves by PTFE slides, fixed in the grooves of the barrel. In comparison with type S3, at 0 stroke, has reduced dimension around 42%, so the cylinder is more compact and economic, but suitable for lighter loads.

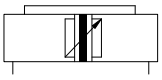

Type S6 Ø 18 ÷ 63

from page 1.26.40



Rodless double guide cylinders, available in bores from Ø 18 to 63, double acting, magnetic. The side carriages (which can also be mounted at a later date), are adjustable and allow the cylinder to be used with heavier loads than type S1, S2, S3 and S5. The guides move by PTFE slides, fixed in the grooves of the barrel.

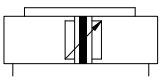

Type S4 Ø 25 ÷ 63

from page 1.26.60



Rodless parallel cylinders, available in bores from Ø 25 to 63, double effect, magnetic. With frontal and lateral yokes and wiper rings. Suitable for high loads and every-direction momentum. Double force and central air connections. If needed it's also possible mount (even at a later date), the lateral guides (special execution).

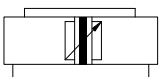

Options

Description	Symbol	Suffix
Both ports on one head (available from Ø 25, not avaliable for type S4)		**U**
Carriage with integral brake (available only for type S1)		**B**

The options, when this is possible, can be combined with each other. For options matching see the table below. Fod code key see page 1.26.4

Options matching

Series	Bore	Model	Standard options matching	
			U (Ø25÷63)	**B**
S1	Ø 18 ÷ 63	Standard	●	●
		Carriage with integral brake (B)	●	
S2	Ø 18 ÷ 63	Standard	●	-
S3	Ø 18 ÷ 63	Standard	●	-
S4	Ø 25 ÷ 63	Standard	-	-
S5	Ø 18 ÷ 63	Standard	●	-
S6	Ø 18 ÷ 63	Standard	●	-

Key
● allowed matching; - not allowed matching

Code key

Bore	/	Stroke	Type	Options	
32	**/**	**500**	**S1**	**U**	

- **Bore**: Ø 18, 25, 32, 40, 50, 63
- **Stroke**: 10 mm ÷ 6000 mm
- **Type**:
  - S1 — Standard, Double acting, Magnetic
  - S2 — Short Standard, Double acting, Magnetic
  - S3 — Guided, Double acting, Magnetic
  - S4 — Parallel, Double acting, Magnetic
  - S5 — Short Guided, Double acting, Magnetic
  - S6 — Double Guide, Double acting, Magnetic
- **Options**:
  - U — from Ø 25, not available for type S4
  - B — Only for type S1

How to order

Bore	/	Stroke	Type	Options
32	**/**	**500**	**S1**	**U**

Notes

For further information on options and their matching, see page 1.26.3.

Spare Parts Kit code key

Cylinder bore	/	Spare Parts Set type	/	Lenght*	/	Cylinder type
50	/	BA	/	5MT	/	S3

- **Cylinder bore**: Ø 18, 25, 32, 40, 50, 63 mm
- **Spare Parts Set type**: SG, PT, BA
- **Lenght***: 1, 5, 10 mt.
- **Cylinder type**: S1, S2, S3, S4, S5, S6

*For Strip Kit only

Seal Kit (1) SG

Number (1) of components	Description
n. 2	Guide ring
n. 2	Head slide guide
n. 2	Piston seal
n. 2	Cushioning seal
n. 2	Head o-ring

(1) Every cylinder type S4 needs double Seal Kit

Slide Guide Kit (2) PT

Number (2) of components	Description
n. 2	PTFE slide guide

(2) Kit for type S6 contains twice components

Strip Kit (3) BA

Number (3) of components	Description
n. 1	Internal strip
n. 1	External strip
n. 2	Strip/tube seals

(3) Kit for type S4 contains twice components

Standard materials

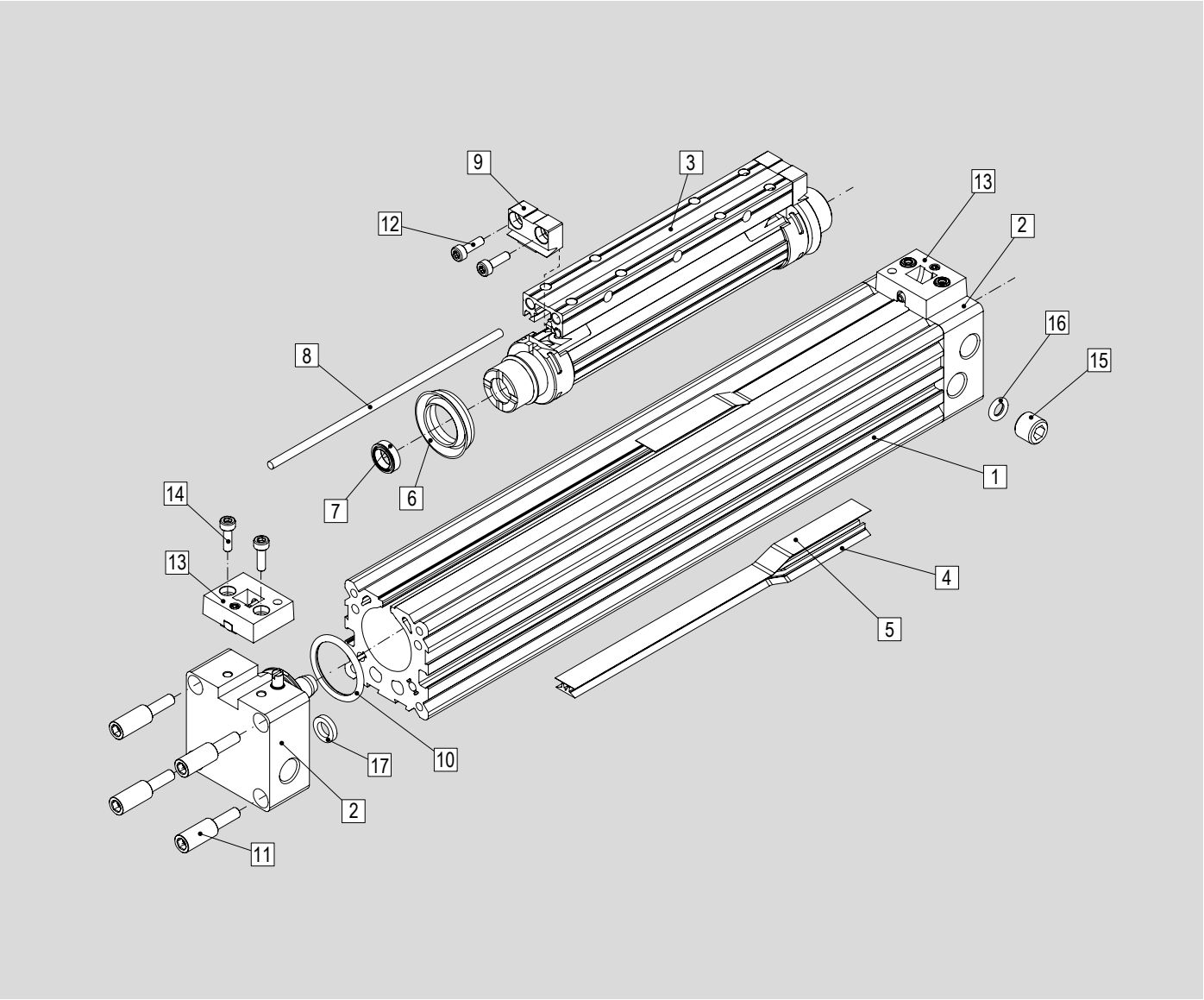

Position	Description	Materials
1	Barrel	Anodised aluminium
2	Head	Anodised aluminium
3	Piston/Yoke block	Aluminium
4	Internal strip	Polyurethane (PU)
5	External strip	Stainless Steel AISI 304
6	Piston seal	Polyurethane (PU)
7	Cushioning seal	PVC
8	Guide ring	PTFE
9	Head slide guide	PVC
10	Head o-ring	Polyurethane (PU)
11	Head special screw	Steel
12	Head slide guide screw	Steel
13	Head cover	PVC
14	Head cover screw	Steel
15	Cushioning screw	Steel
16	O-ring	Polyurethane (PU)
17	Seal	Polyurethane (PU)

Accessories

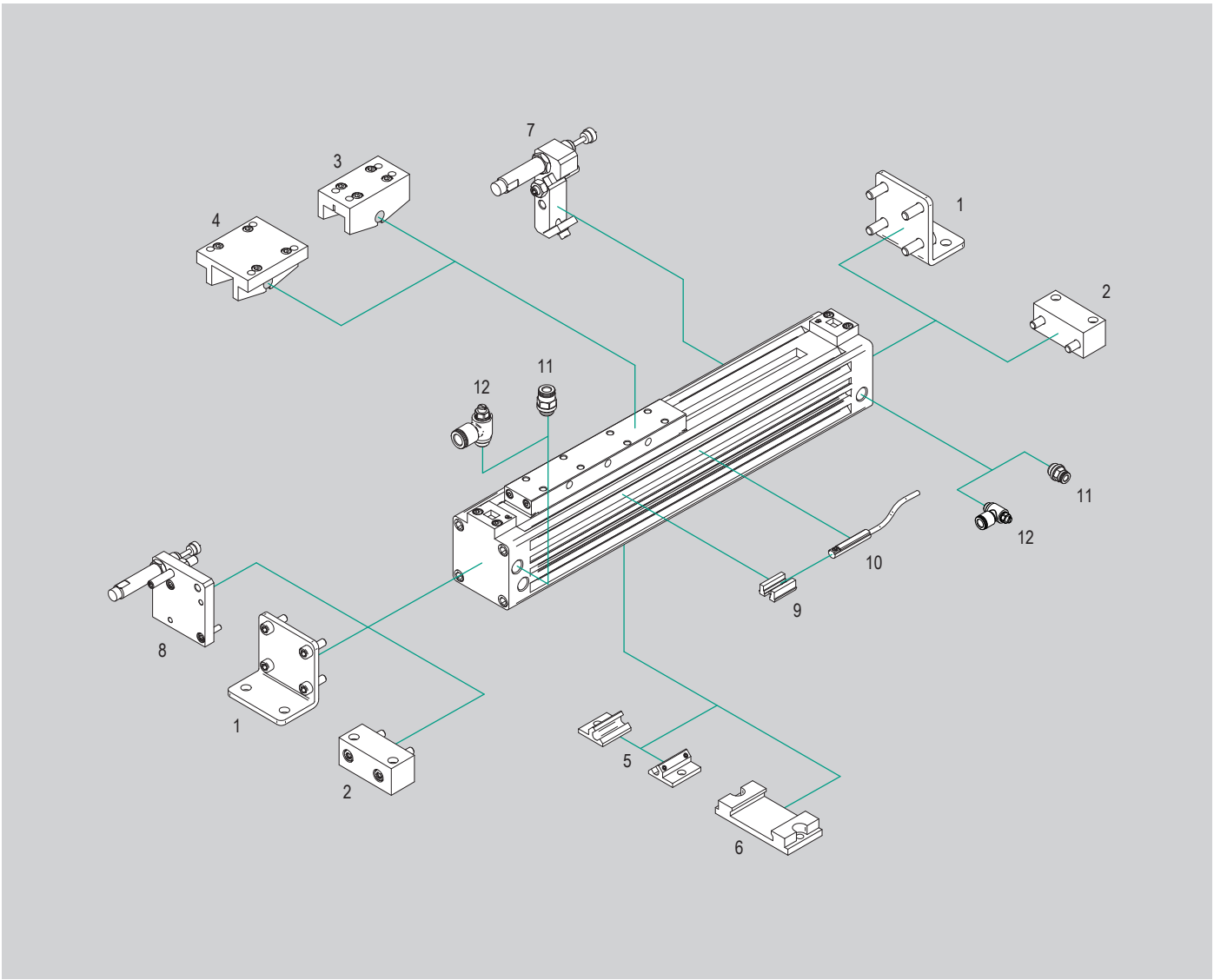

N.	Cylinder bore	Item	Description	Compliance	Matching						Code page	Data sheet page
					S1	S2	S3	S4	S5	S6		
1	Ø 18 ÷ 63	P..S	Light foot	-	●	●	●	●	●	●	1.26.90	1.100.253
2	Ø 18 ÷ 63	PP..S	Heavy foot		●	●	●	●	●	●		
3	Ø 18 ÷ 63	CL..S	Light flexible coupling		●(1)	●	-	-	-	-		1.100.250
4	Ø 18 ÷ 63	C..S	Heavy flexible coupling		●(1)	●	-	-	-	-		
5	Ø 18 ÷ 63	SI..S	Light mid support		●(1)	●	-	●	-	-		1.100.252
6	Ø 18 ÷ 63	SIP..S	Heavy mid support		●(1)	●	-	●	-	-		
7	Ø 18 ÷ 63	SID..S	Mid support for shock absorbers		-	-	●	-	●	●		1.100.251
8	Ø 18 ÷ 63	STD..S	End support for shock absorbers		-	-	●	-	●	●		
9	Ø 18	AS109	Bracket for T type magnetic reed switches		●	●	●	-	●	●	1.26.91	1.120.2
10	Ø 18 ÷ 63	ASV..	Magnetic reed switch T groove		●	●	●	●	●	●		1.110.10
11	Ø 18 ÷ 63	R..	Push-in fittings		●	●	●	●	●	●	4.2.1	
12	Ø 18 ÷ 63	V..C	Flow controls, for cylinders		●	●	●	●	●	●	4.94.1	

Key

● matching accessory; - not matching accessory

(1) Do not matching with option **B** mounted

Main features

18 ÷ 63

Bores Ø

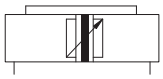

Standard
Double acting
Magnetic

S1

Type



18 ÷ 63

Bores Ø

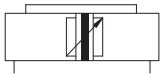

Short Standard
Double acting
Magnetic

S2

Type



Technical data

Bore Ø mm			18	25	32	40	50	63
Fluid			Filtered compressed air with or without lubrication. Lubrication, if started, must be continued.					
Pressure range			1,5 ÷ 9 bar					
Temperature range			-10°C ÷ +70°C					
Strokes			10 ÷ 6000 mm					
Ports			M5	G 1/8"		G 1/4"		G 3/8"
Deceleration stroke			15	18	24	34	40	49
Theoretical thrust force at 6 bar (N)			140	270	440	680	1060	1680
Weight (g)	Basic weight	S1	400	800	1300	2200	4300	6600
		S2	100	500	1000	1600	2700	4200
	Additional 10 mm stroke		15	25	34	45	75	95

Loads and momentum

Type: **S1**

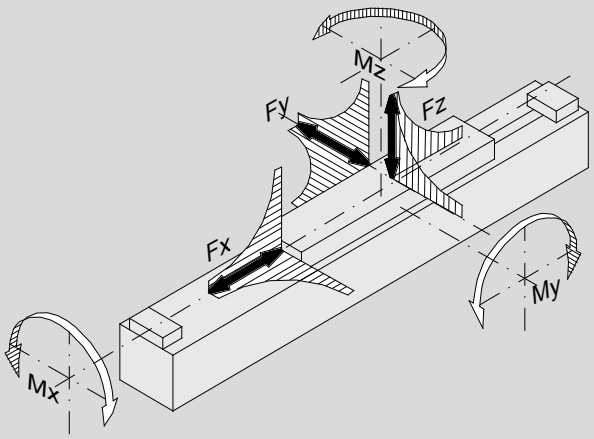

Ø (mm)	Force (Vmax ≤ 0,35 m/s)			F (load in N)			Momentum		
	Fx (N) 6 bar	Fy (N) 6 bar	Fz (N) 6 bar	a 0,75 m/s	a 1 m/s	a 1,5 m/s	Mx (Nm) Fy/Fz	My (Nm) Fx/Fz	Mz (Nm) Fx/Fy
18	140	80	300	80	40	20	1	3	3
25	270	110	480	155	90	40	2	13	13
32	440	165	650	280	155	70	3,5	25	25
40	680	225	800	500	290	125	5,5	40	40
50	1060	325	1060	790	420	195	10	65	65
63	1680	435	1680	1500	850	370	16	100	100

Type: **S2**

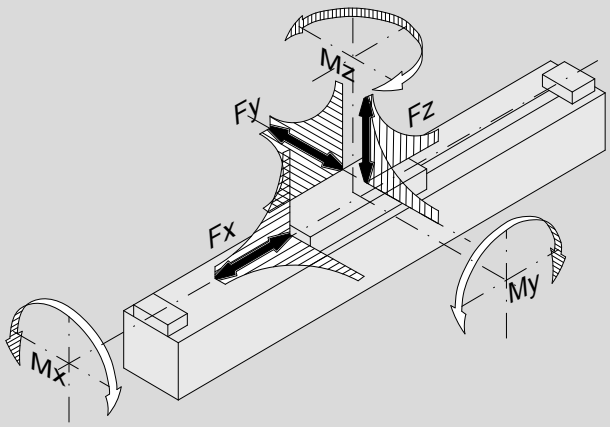

Ø (mm)	Force (Vmax ≤ 0,35 m/s)			F (load in N)			Momentum		
	Fx (N) 6 bar	Fy (N) 6 bar	Fz (N) 6 bar	a 0,75 m/s	a 1 m/s	a 1,5 m/s	Mx (Nm) Fy/Fz	My (Nm) Fx/Fz	Mz (Nm) Fx/Fy
18	140	40	140	40	25	10	0,4	1,7	1,7
25	270	55	230	90	50	25	0,7	2,7	2,7
32	440	70	320	200	110	45	1	5	5
40	680	100	400	420	240	110	2	8,5	8,5
50	1060	140	480	750	440	190	3,5	13	13
63	1680	180	590	1500	850	380	5	18	18

All data regarding the forces, refer to a speed of V ≤ 0,35 m/s.
Maintaining the indicated values will allow to optimize lifetime, noise and efficiency. Higher speeds greatly reduce allowable forces. If operating conditions are outside the allowable limits (see table above), the energy of the moving mass must be absorbed by appropriate devices (hydraulic decelerators, stops, and similar), mounted as close as possible to the mass center of gravity.

Maximum allowable deflections

Fz at deflection 0,5 mm

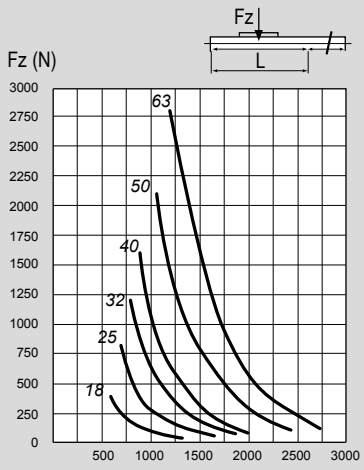

Fz at deflection 1 mm

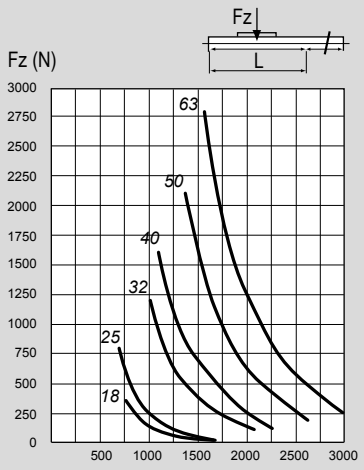

With long strokes cylinders or heavy loads, you should pay attention to the tube deflection.
One or more mid supports can be used according to the admissible deflection.

Example:
When applying a force Fz = 500 N to a cylinder 25 mm which could not deflect over 0,5 mm cannot be longer than 750 mm according to the diagram.
Should you exceed 750 mm use one or more mid supports (for mid support see page 1.26.90).

Standard dimensions

Type: **S1**

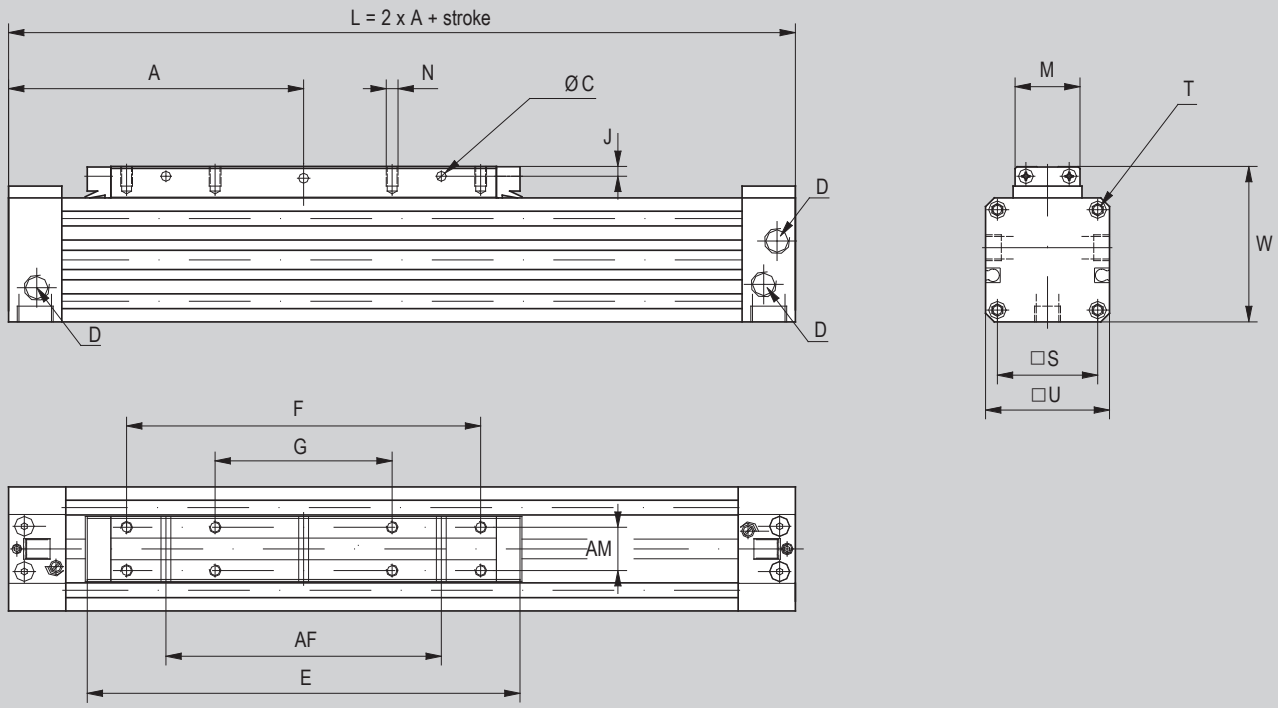

Ø (mm)	A	AF	AM	D	E	F	G	J	M	N	ØC	□S	T	□U	W
18	80	50	10	M5x6	103	75	-	3	15.5	M3x6	3.5	23.5	M3x7	30	39
25	100	70	13	G1/8x8	131	100	50	3.5	20	M4x7	4.5	33	M4x9	42	53
32	120	100	16	G1/8x8	171	140	70	4.5	25	M5x9	5.5	41	M5x10	52	65
40	150	140	22	G1/4x12	220	180	90	5	33	M6x10	7	51	M6x12	63	79
50	180	180	29	G1/4x12	280	220	110	6.5	42	M8x12.5	7	63	M8x12	78	96
63	215	230	40	G3/8x12	333	280	140	8	54	M8 x 15	9	78	M8x12	93	113.5

Standard dimensions

Type: **S2**

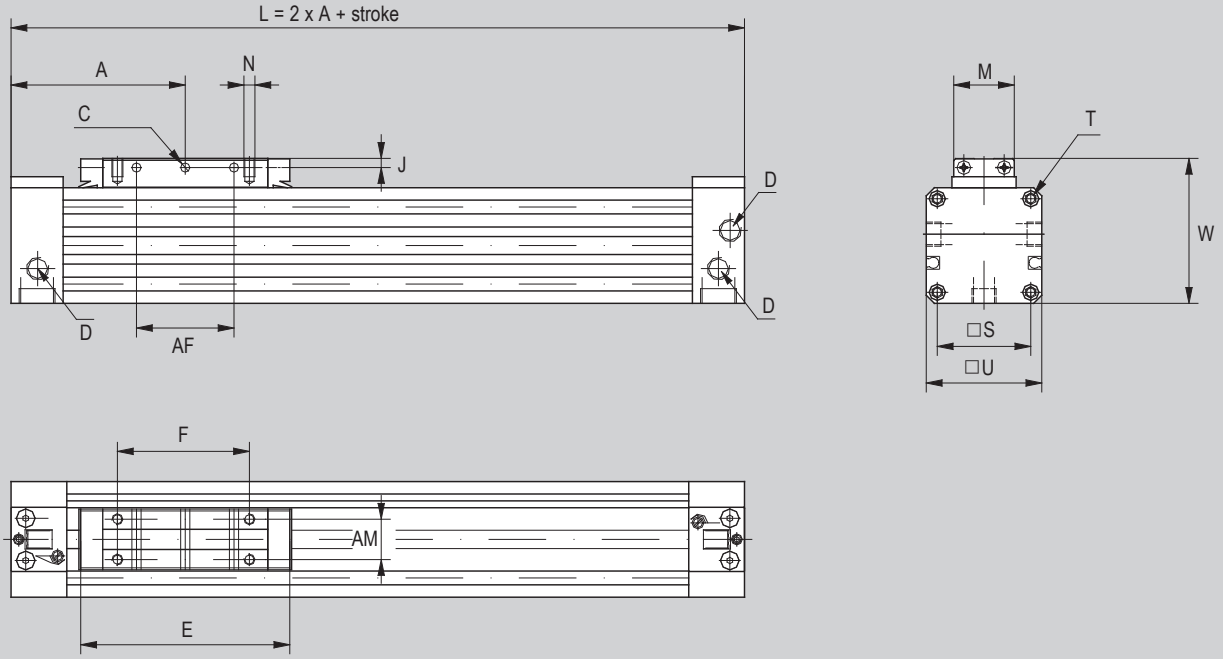

Ø (mm)	A	AF	AM	D	E	F	J	M	N	ØC	□S	T	□U	W
18	57.5	15	10	M5x6	58	30	3	15.5	M3x6	3.5	23.5	M3x7	30	39
25	67.5	19	13	G1/8x8	66	35	3.5	20	M4x7	4.5	33	M4x9	42	53
32	77.5	35	16	G1/8x8	86	55	4.5	25	M5x9	5.5	41	M5x10	52	65
40	95	50	22	G1/4x12	110	70	5	33	M6x10	7	51	M6x12	63	79
50	105	46	29	G1/4x12	130	70	6.5	42	M8x12	7	63	M8x12	78	96
63	125	70	40	G3/8x12.5	153	100	8	54	M8x15	9	78	M8x12	93	113.5

Dimensions with options

Type: **...B**
only for type **S1**

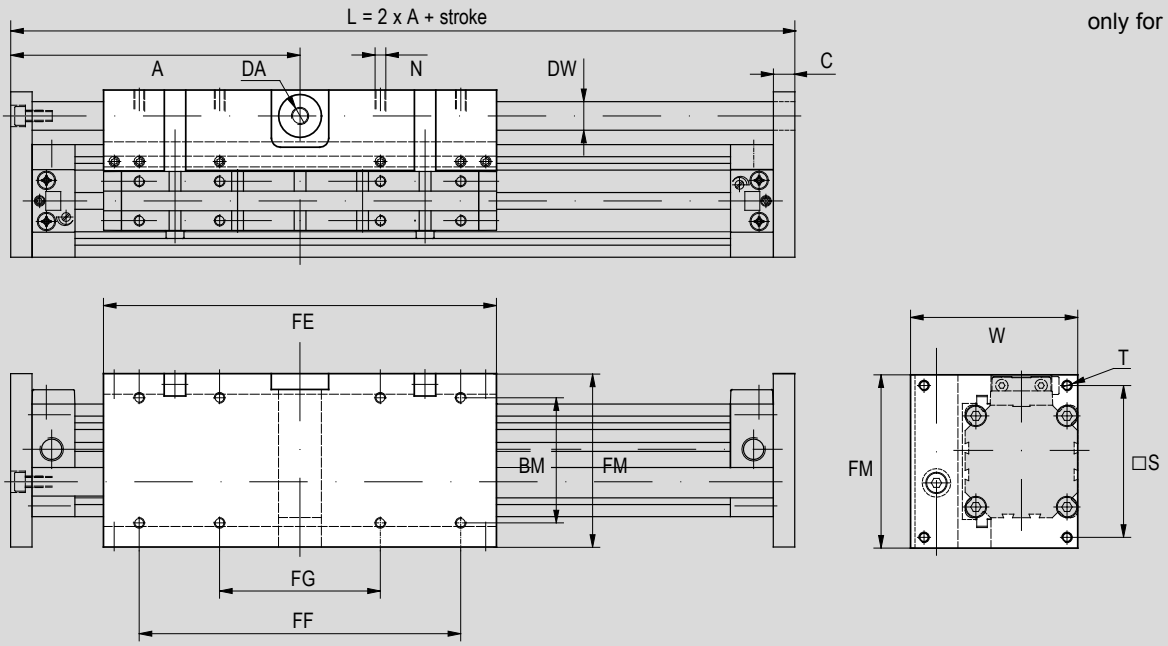

Type: **...U**
Ø 25 ÷ 63

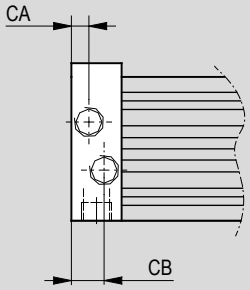

Ø (mm)	A	BM	C	DA	DW	FE	FF	FG	FM	W	N	S	T	CA	CB
18	86	35	6	M5	Ø 6	103	75	-	50	48	M4x7,5	42	M3	-	-
25	110	45	10	M5	Ø 12	131	100	50	66	67	M4x8	54	M4	7	13
32	130	55	10	M5	Ø 12	171	140	70	80	79	M5x10	68	M5	7	13
40	162	70	12	1/8”	Ø 16	220	180	90	97	93,5	M6x12	80	M6	11	14.5
50	195	85	15	1/8”	Ø 20	280	220	110	116	115,5	M8x16	100	M8	12	14
63	230	105	15	1/8”	Ø 20	333	280	140	136	139	M8x16	120	M8	12,5	15,5

Main features

18 ÷ 63
Bores Ø

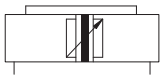

Guided
Double acting
Magnetic

S3
Type



18 ÷ 63
Bores Ø

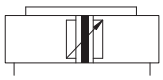

Short Guided
Double acting
Magnetic

S5
Type



18 ÷ 63
Bores Ø

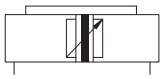

Double Guide
Double acting
Magnetic

S6
Type



Technical data

Bore Ø mm			18	25	32	40	50	63
Fluid			Filtered compressed air with or without lubrication. Lubrication, if started, must be continued.					
Pressure range			2 ÷ 8 bar					
Temperature range			-20°C ÷ +80°C					
Strokes			10 ÷ 6000 mm					
Ports			M5	G 1/8"		G 1/4"		G 3/8"
Deceleration stroke			15	18	24	34	40	49
Theoretical thrust force at 6 bar (N)			140	270	440	680	1060	1680
Weight (g)	Basic weight	S3	500	1100	1800	3200	5900	8400
		S5	300	700	1300	2100	3400	5500
		S6	600	1300	2400	4200	7500	10000
	Additional 10 mm stroke		15	25	34	45	75	95

Loads and momentum

Type: **S3**

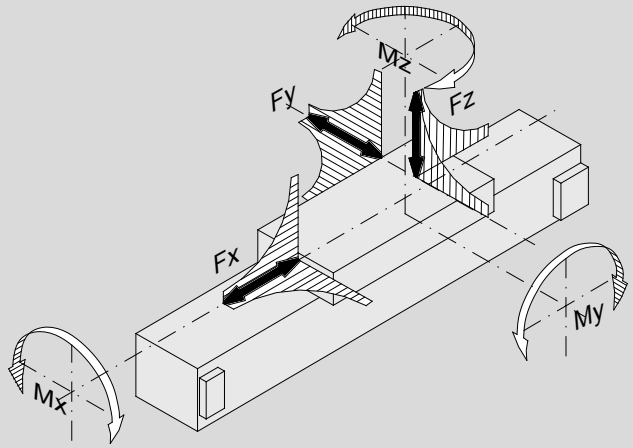

Ø (mm)	Force (Vmax ≤ 0,35 m/s)			F (load in N)			Momentum		
	Fx (N) 6 bar	Fy (N) 6 bar	Fz (N) 6 bar	a 0,75 m/s	a 1 m/s	a 1,5 m/s	Mx (Nm) Fy/Fz	My (Nm) Fx/Fz	Mz (Nm) Fx/Fy
18	140	370	370	100	58	26	3,5	6	6
25	270	800	800	280	160	65	10	20	20
32	440	1200	1200	510	300	140	25	45	45
40	680	1600	1600	1000	550	250	40	75	75
50	1060	2100	2100	1500	850	380	80	150	150
63	1680	2800	2800	2500	1400	610	110	250	250

Type: **S5**

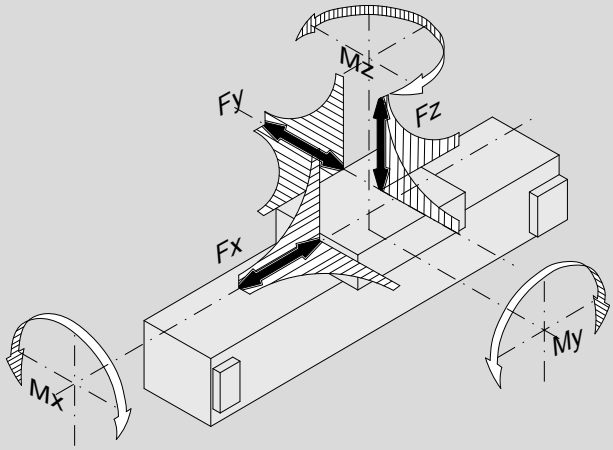

Ø (mm)	Force (Vmax ≤ 0,35 m/s)			F (load in N)			Momentum		
	Fx (N) 6 bar	Fy (N) 6 bar	Fz (N) 6 bar	a 0,75 m/s	a 1 m/s	a 1,5 m/s	Mx (Nm) Fy/Fz	My (Nm) Fx/Fz	Mz (Nm) Fx/Fy
18	140	150	150	50	30	12	1,8	1,8	1,8
25	270	250	250	100	60	30	4	4	4
32	440	450	450	250	135	65	10	10	10
40	680	600	600	480	280	140	16	16	16
50	1060	900	900	800	480	220	30	30	30
63	1680	1100	1100	1500	950	400	45	45	45

Loads and momentum

Type: **S6**

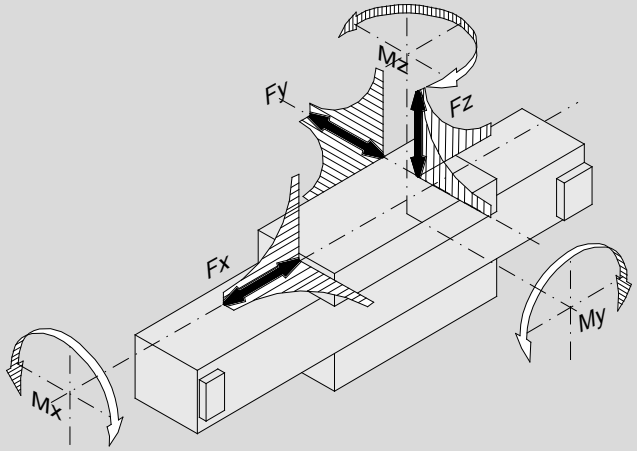

Ø (mm)	Force (Vmax ≤ 0,35 m/s)			F (load in N)			Momentum		
	Fx (N) 6 bar	Fy (N) 6 bar	Fz (N) 6 bar	a 0,75 m/s	a 1 m/s	a 1,5 m/s	Mx (Nm) Fy/Fz	My (Nm) Fx/Fz	Mz (Nm) Fx/Fy
18	140	550	550	150	80	20	5,2	9	9
25	270	1200	1200	420	210	80	15	30	30
32	440	1800	1800	750	400	170	37	67	67
40	680	2400	2400	1500	750	300	60	110	110
50	1060	3200	3200	2200	1150	460	120	220	220
63	1680	4200	4200	3700	1900	740	170	370	370

All data regarding the forces, refer to a speed of V ≤ 0,35 m/s.
Maintaining the indicated values will allow to optimize lifetime, noise and efficiency. Higher speeds greatly reduce allowable forces. If operating conditions are outside the allowable limits (see table above), the energy of the moving mass must be absorbed by appropriate devices (hydraulic decelerators, stops, and similar), mounted as close as possible to the mass center of gravity.

Maximum allowable deflections

Fz at deflection 0,5 mm

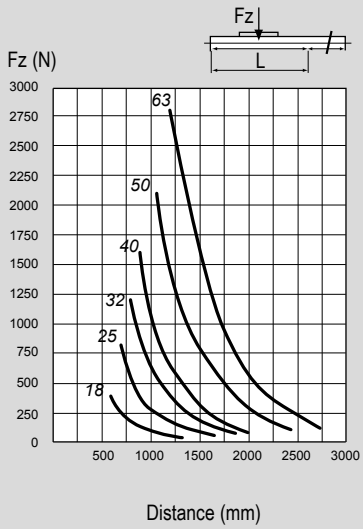

Fz at deflection 1 mm

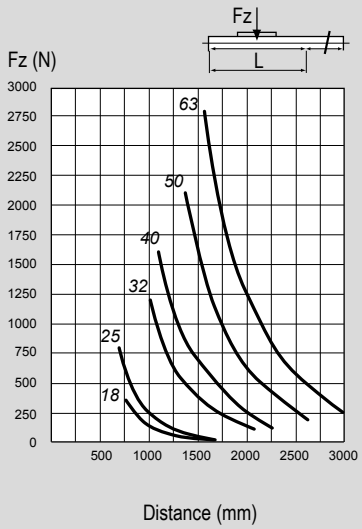

With long strokes cylinders or heavy loads, you should pay attention to the tube deflection.
One or more mid supports can be used according to the admissible deflection.

Example:
When applying a force Fz = 500 N to a cylinder 25 mm which could not deflect over 0,5 mm cannot be longer than 750 mm according to the diagram.
Should you exceed 750 mm use one or more mid supports (for mid support see page 1.26.90).

Standard dimensions

Type: **S3**

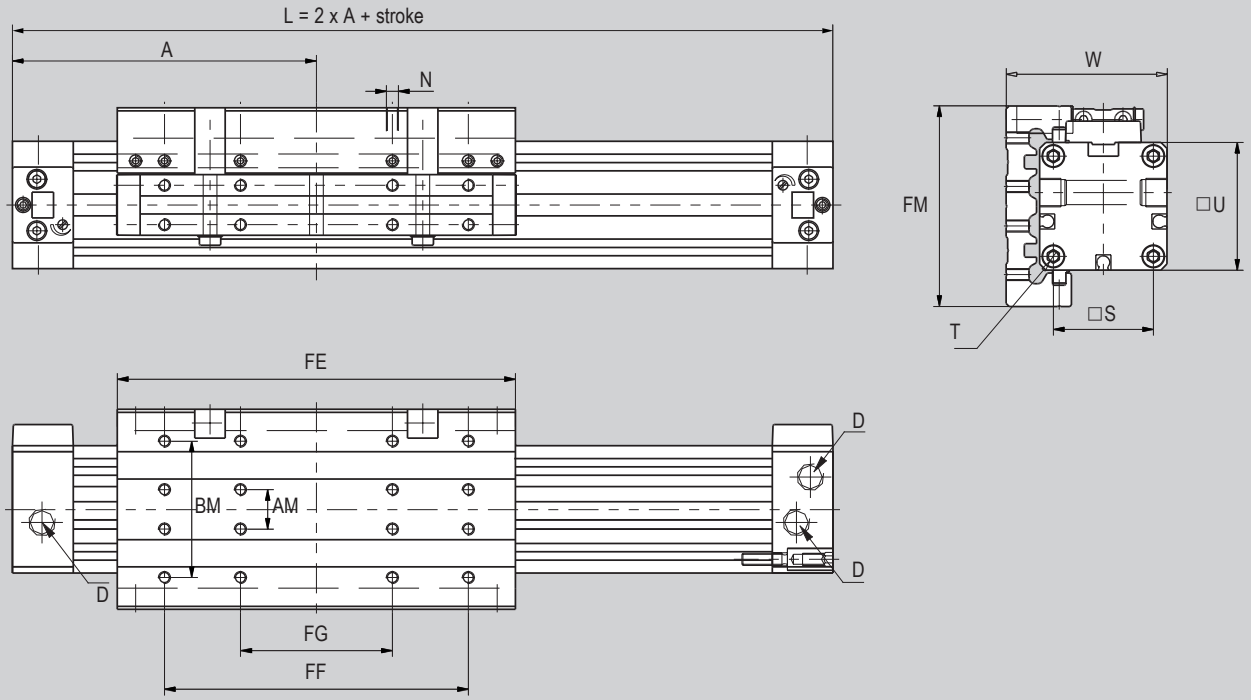

Ø (mm)	A	AM	BM	D	FE	FF	FG	FM	W	N	□S	T	□U
18	80	10	35	M5x6	103	75	-	50	39	M4x7,5	23,5	M3x7	30
25	100	13	45	G1/8x8	131	100	50	66	53	M4x8	33	M4x9	42
32	120	16	55	G1/8x8	171	140	70	80	65	M5x10	41	M5x10	52
40	150	22	70	G1/4x12	220	180	90	97	79	M6x12	51	M6x12	63
50	180	29	85	G1/4x12	280	220	110	116	96	M8x16	63	M8x12	78
63	215	40	105	G3/8x12	333	280	140	136	113,5	M8x16	78	M8x12	93

Standard dimensions

Type: **S5**

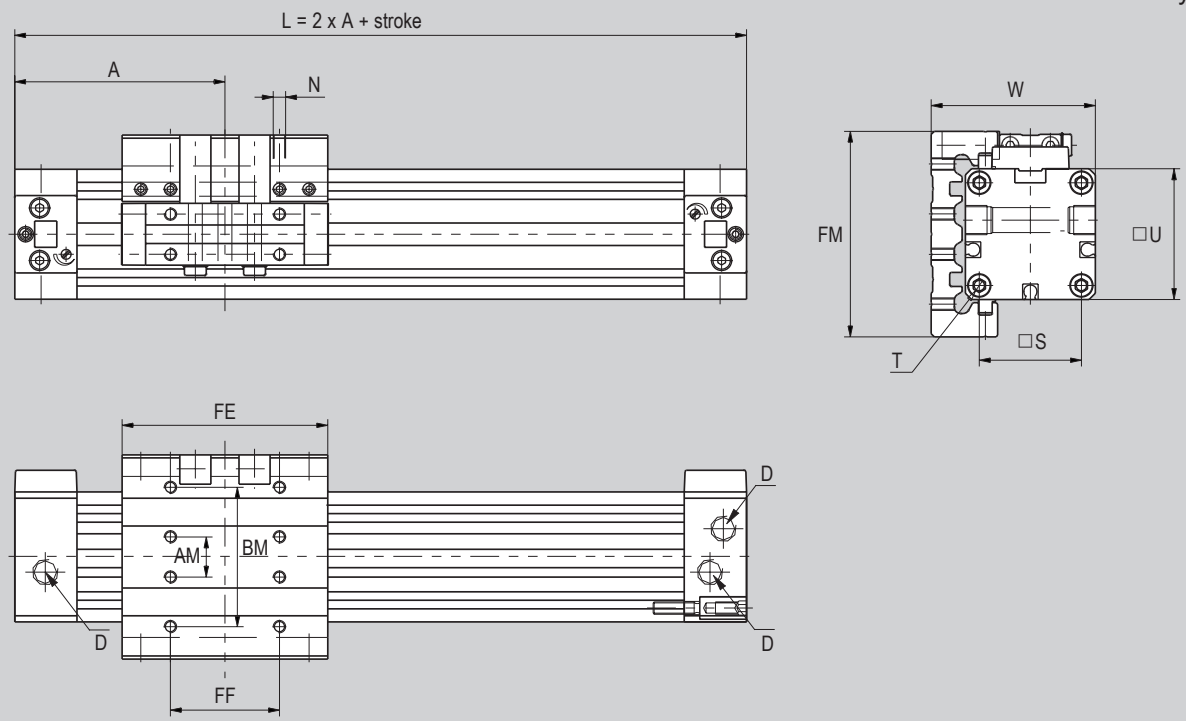

Ø (mm)	A	AM	BM	D	FE	FF	FM	W	N	□S	T	□U
18	57.5	10	35	M5x6	58	30	50	39	M4x7.5	23.5	M3x7	30
25	67.5	13	45	G1/8x8	66	35	66	53	M4x8	33	M4x9	42
32	77.5	16	55	G1/8x8	86	55	80	65	M5x10	41	M5x10	52
40	95	22	70	G1/4x12	110	70	97	79	M6x12	51	M6x12	63
50	105	29	85	G1/4x12	130	70	116	96	M8x16	63	M8x12	78
63	125	40	105	G3/8x12	153	100	136	113.5	M8x16	78	M8x12	93

Standard dimensions

Type: **S6**

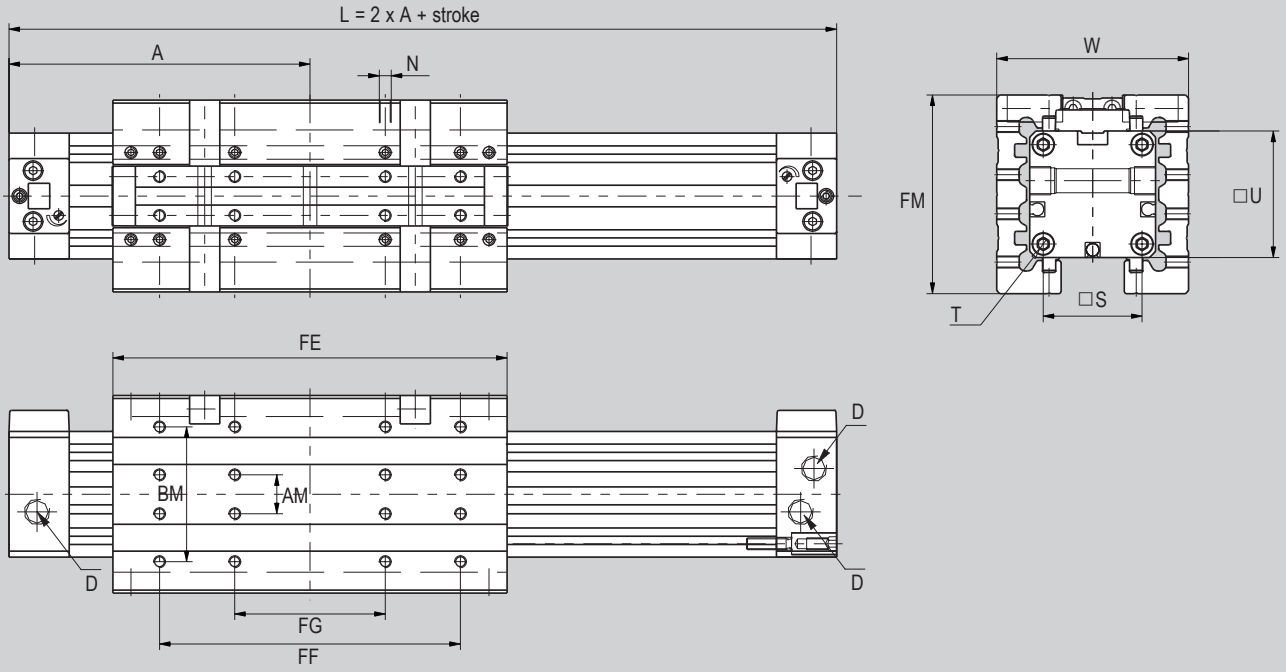

Ø (mm)	A	AM	BM	D	FE	FF	FG	FM	W	N	□S	T	□U
18	80	10	35	M5x6	103	75	-	50	48	M4x7.5	23.5	M3x7	30
25	100	13	45	G1/8x8	131	100	50	66	64	M4x8	33	M4x9	42
32	120	16	55	G1/8x8	171	140	70	80	78	M5x10	41	M5x10	52
40	150	22	70	G1/4x12	220	180	90	97	95	M6x12	51	M6x12	63
50	180	29	85	G1/4x12	280	220	110	116	114	M8x16	63	M8x12	78
63	215	40	105	G3/8x12	333	280	140	136	134	M8x16	78	M8x12	93

Dimensions with options

Type: **...U**
Ø 25 ÷ 63

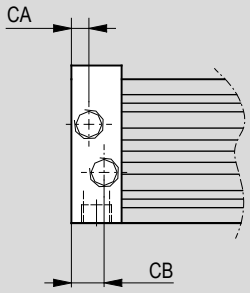

Ø (mm)	CA	CB	
25	7	13	
32	7	13	
40	11	14.5	
50	12	14	
63	12,5	15,5	

Main features

25 ÷ 63

Bores Ø

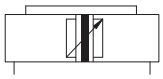

Parallel
Double acting
Magnetic

S4

Type



Technical data

Bore Ø mm		25	32	40	50	63
Fluid		Filtered compressed air with or without lubrication. Lubrication, if started, must be continued.				
Pressure range		2 ÷ 8 bar				
Temperature range		-20°C ÷ +80°C				
Strokes		10 ÷ 6000 mm				
Ports		G 1/4"		G 3/8"		G 1/2"
Deceleration stroke		18	24	34	40	49
Theoretical thrust force at 6 bar (N)		540	880	1360	2120	3360
Weight (g)	Basic weight	1900	3300	5800	11700	17000
	Additional 10 mm stroke	50	68	98	150	190

Loads and momentum

Type: **S4**

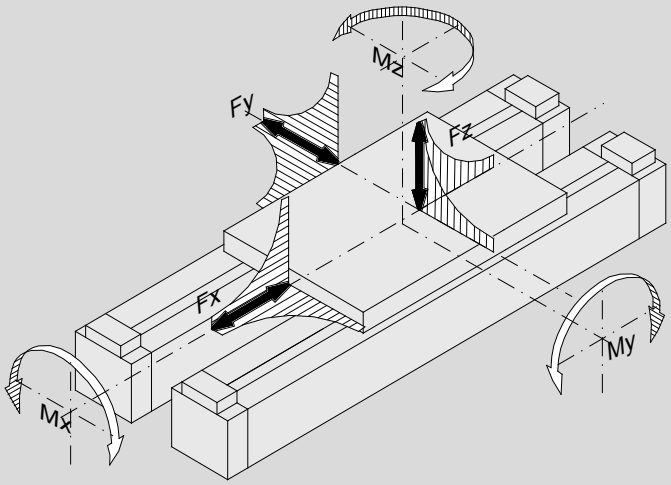

Ø (mm)	Force (Vmax ≤ 0,35 m/s)			F (load in N)			Momentum		
	Fx (N) 6 bar	Fy (N) 6 bar	Fz (N) 6 bar	a 0,75 m/s	a 1 m/s	a 1,5 m/s	Mx (Nm) Fy/Fz	My (Nm) Fx/Fz	Mz (Nm) Fx/Fy
25	540	240	900	300	175	75	16	27	27
32	880	360	1220	540	300	130	29	52	52
40	1360	540	1750	1090	620	280	55	88	88
50	2120	750	2500	1760	1000	450	90	155	155
63	3360	1000	3300	2900	1660	720	148	260	260

All data regarding the forces, refer to a speed of V ≤ 0,35 m/s.
Maintaining the indicated values will allow to optimize lifetime, noise and efficiency. Higher speeds greatly reduce allowable forces. If operating conditions are outside the allowable limits (see table above), the energy of the moving mass must be absorbed by appropriate devices (hydraulic decelerators, stops, and similar), mounted as close as possible to the mass center of gravity.

Maximum allowable deflections

Fz at deflection 0,5 mm

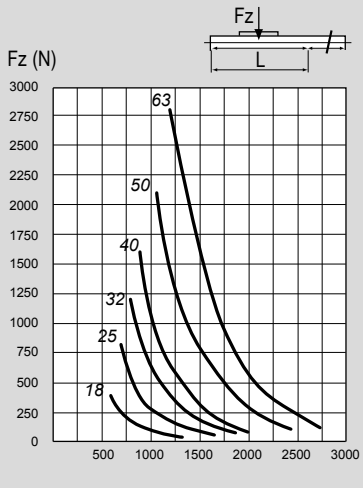

Fz at deflection 1 mm

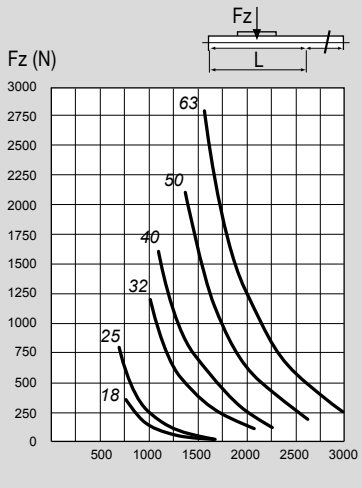

With long strokes cylinders or heavy loads, you should pay attention to the tube deflection.
One or more mid supports can be used according to the admissible deflection.

Example:
When applying a force Fz = 500 N to a cylinder 25 mm which could not deflect over 0,5 mm cannot be longer than 750 mm according to the diagram.
Should you exceed 750 mm use one or more mid supports (for mid support see page 1.26.90).

Standard dimensions

Type: **S4**

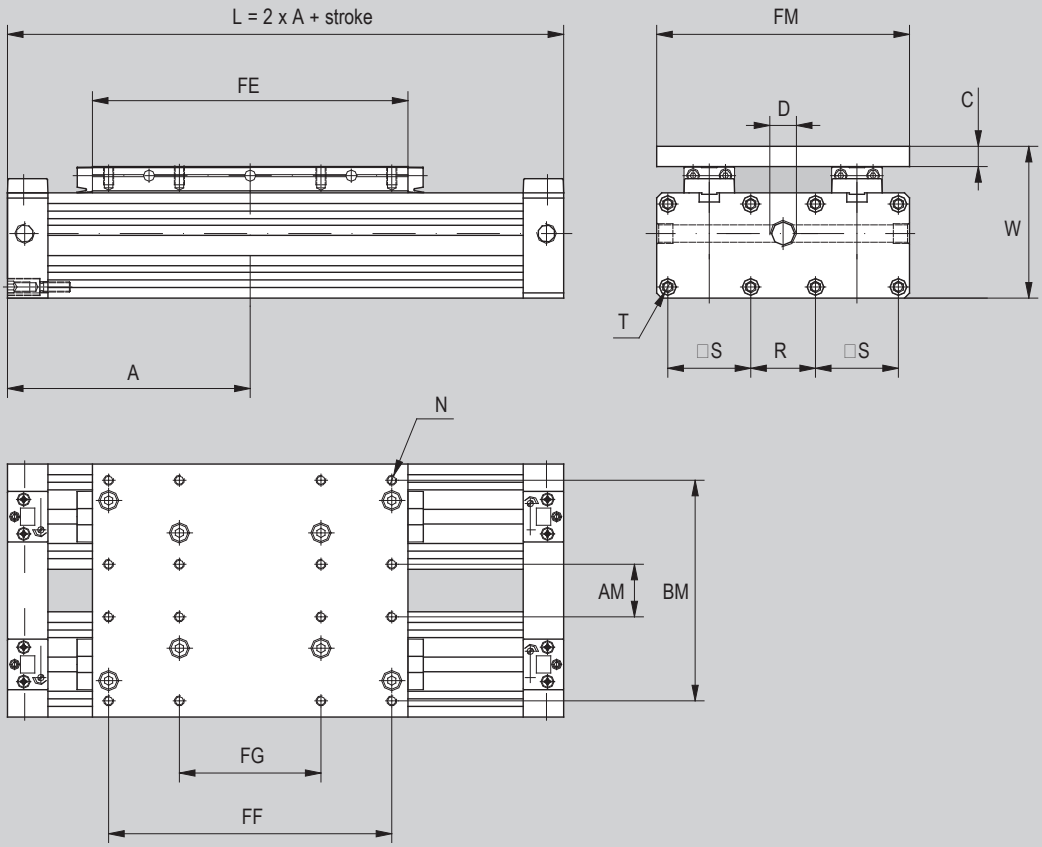

Ø (mm)	A	C	D	FE	FF	FG	AM	BM	FM	N	R	□S	T	W
25	100	8	G1/4x12	116	100	50	21	79	92	M4	17	33	M4x9	61
32	120	10	G1/4x12	156	140	70	26	109	125	M5	31	41	M5x10	75
40	150	12	G3/8x12	200	180	90	35	139	159	M6	45	51	M6x12	91
50	180	15	G3/8x12	260	220	110	44	164	184	M8	43	63	M8x12	111
63	215	15	G1/2x13	313	280	140	55	195	218	M8	47	78	M8x12	128.5

Light foot* P..S



For cylinder Ø mm	Code	Item	Cylinder matching
18	559010	P18S	S1 S2 S3 S4 S5 S6
25	559011	P25S	
32	559012	P32S	
40	559013	P40S	
50	559014	P50S	
63	559015	P63S	

*Kit composed by 2 feet

Heavy foot* PP..S



For cylinder Ø mm	Code	Item	Cylinder matching
18	559096	PP18S	S1 S2 S3 S4 S5 S6
25	559097	PP25S	
32	559098	PP32S	
40	559099	PP40S	
50	559100	PP50S	
63	559101	PP63S	

*Kit composed by 2 feet

Light mid support* SI..S



For cylinder Ø mm	Code	Item	Cylinder matching
18	559020	SI18S	S1** S2 S4
25	559021	SI25S	
32	559022	SI32S	
40	559023	SI40S	
50	559024	SI50S	
63	559025	SI63S	

*Kit composed by 2 supports

Do not matching with option **B mounted

Heavy mid support* SIP..S



For cylinder Ø mm	Code	Item	Cylinder matching
18	559102	SIP18S	S1** S2 S4
25	559103	SIP25S	
32	559104	SIP32S	
40	559105	SIP40S	
50	559106	SIP50S	
63	559107	SIP63S	

*Kit composed by 2 supports

Do not matching with option **B mounted

Light flexible coupling CL..S



For cylinder Ø mm	Code	Item	Cylinder matching
18	559038	CL18S	S1** S2
25	559037	CL25S	
32	559032	CL32S	
40	559033	CL40S	
50	559034	CL50S	
63	559035	CL63S	

Do not matching with option **B mounted

Heavy flexible coupling C..S



For cylinder Ø mm	Code	Item	Cylinder matching
18	559001	C18S	S1** S2
25	559002	C25S	
32	559003	C32S	
40	559004	C40S	
50	559005	C50S	
63	559006	C63S	

Do not matching with option **B mounted

Mid support for shock absorbers* SID..S



For cylinder Ø mm	Code	Item	Cylinder matching
18	559060	SID18S	S3 S5 S6
25	559061	SID25S	
32	559062	SID32S	
40	559063	SID40S	
50	559064	SID50S	
63	559065	SID63S	

*Shock absorber to be ordered separately, see page 1.105.1

End support for shock absorbers* STD..S



For cylinder Ø mm	Code	Item	Cylinder matching
18	559070	STD18S	S3 S5 S6
25	559071	STD25S	
32	559072	STD32S	
40	559073	STD40S	
50	559074	STD50S	
63	559075	STD63S	

*Shock absorber to be ordered separately, see page 1.105.1

Bracket AS109 (for magnetic reed switches T groove)

	For cylinder Ø mm	Code	Item	Cylinder matching*
	18	072916	AS109	S..

*Required only for Ø 18

Magnetic reed switch T groove ASV..

	For cylinder Ø mm	Code	Item	Cylinder matching*
	18 ÷ 63	070946	ASV1C525	S1 S2 S3 S4 S5 S6
		071863	ASV1C550	
		071864	ASV1C51K	
		071189	ASV1C5M8	
		073639	ASV4D225	
		070246	ASV4D2M8	
		074900	ASV7N225	
		070247	ASV7N2M8	
		070372	ASV7M2M8	
		072918	ASV1H525	

*For Ø 18 use the bracket type AS109, for Ø 25 ÷ 63 use grooves.

ROTARY
Cylinders

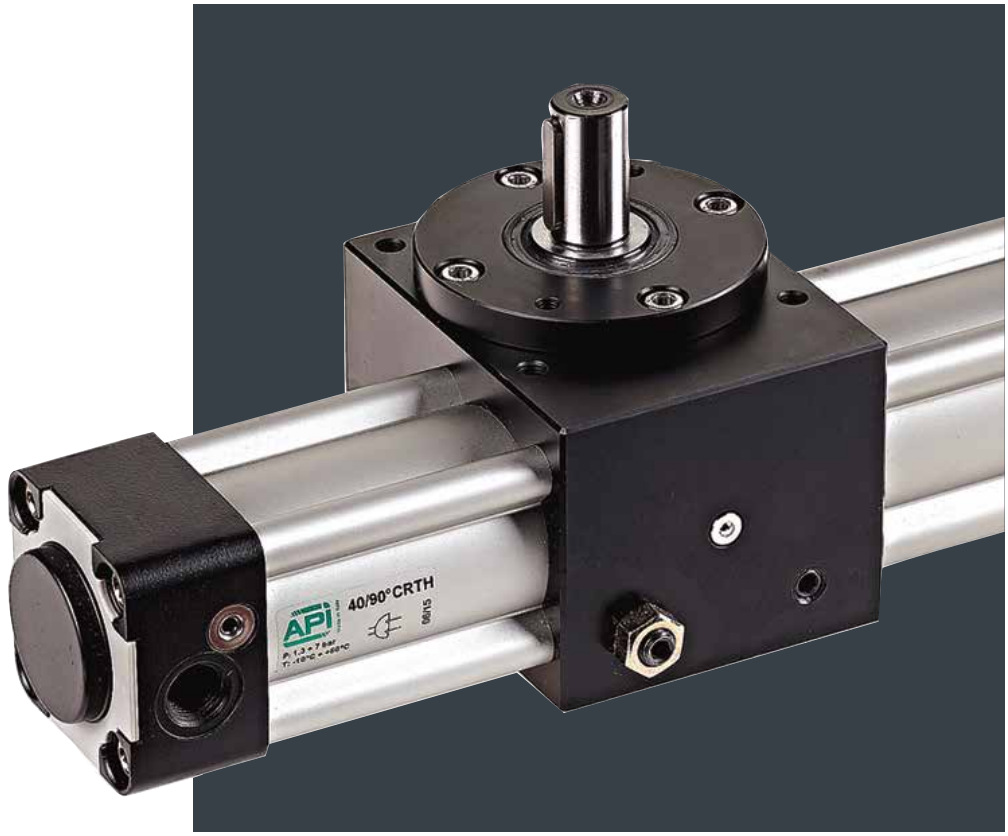

Find out our
key products

- **Solution for most applications**
- **Easy and intuitive choice**
- **Excellent value for money**
- **Wide availability**
- **Fast delivery**

Features and certifications

Series of rotary cylinders with rack and pinion, available in bores Ø 40, 63 and 80, double acting, magnetic, with 90° or 180° rotation angle. Equipped with adjustable cushionings, and with possibility to apply magnetic reed switches. Available in three configurations: male pinion, double male pinion or female pinion.
Supplied as standard in compliance with Reach and RoHS directives.

Type CRTH Ø 40 - 63 - 80

from page 1.40.20



Rotary cylinders with male pinion, available in bores Ø 40, 63 and 80, double acting, magnetic, with 90° or 180° rotation angle.
Equipped with adjustable cushionings, and with possibility to apply magnetic reed switches.

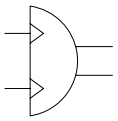

Type CRTHD Ø 40 - 63 - 80

from page 1.40.20



Rotary cylinders with double male pinion, available in bores Ø 40, 63 and 80, double acting, magnetic, with 90° or 180° rotation angle.
Equipped with adjustable cushionings, and with possibility to apply magnetic reed switches.

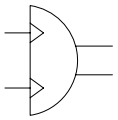

Type CRTF Ø 40 - 63 - 80

from page 1.40.20



Rotary cylinders with female pinion, available in bores Ø 40, 63 and 80, double acting, magnetic, with 90° or 180° rotation angle.
Equipped with adjustable cushionings, and with possibility to apply magnetic reed switches.

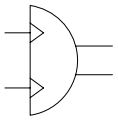

Options

Description	Symbol	Suffix
Special versions on request		**/S**

Code key

Bore	/	Angle of rotation	Type	/	Special version
63	**/**	**90°**	**CRTH**	**/**	

- Bore: Ø 40, 63, 80
- Angle of rotation: 90° - 180°
- Type:
  - CRTH — Double acting, magnetic, Male pinion
  - CRTHD — Double acting, magnetic, Double male pinion
  - CRTF — Double acting, magnetic, Female pinion
- Special version: S

How to order

Bore		Angle	Type	Options
63	**/**	**90°**	**CRTH**	

Notes

For further information on options see the table above.

Standard materials

Type: **CRTH, CRTHD**

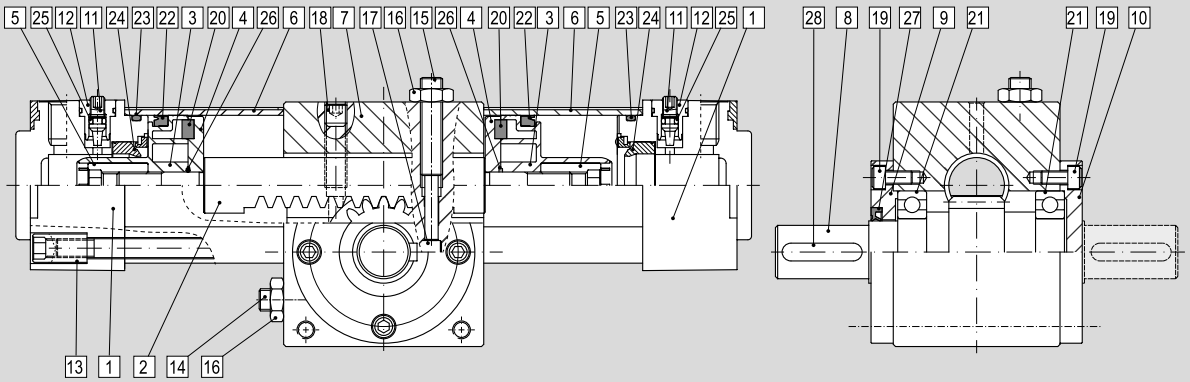

Type: **CRTF**

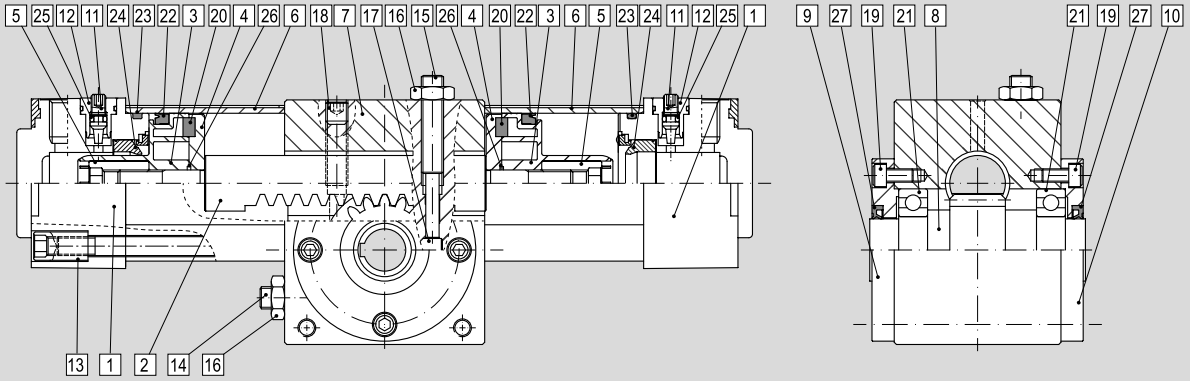

Position	Description	Materials
1	End cover	Anodised aluminium
2	Rack	Carbon steel
3	Piston	Acetalic resin (POM)
4	Magnet holder	Anodised aluminium
5	Piston nut	Carbon steel
6	Cylinder barrel	Anodised aluminium
7	Body	Anodised aluminium
8	Pinion	Carbon steel
9	End cover	Anodised aluminium
10	End cover	Anodised aluminium
11	Cushion needle	Stainless Steel
12	Cushion screw guide	Nickel-plated brass
13	Tie bolt	Galvanized carbon steel
14	Adjusting screw	Carbon steel blackening
15	Adjusting screw	Carbon steel blackening
16	Lock nut	Carbon steel
17	Stopper pin	Carbon steel
18	Adjusting screw	Carbon steel blackening
19	Screw	Nickel-plated carbon steel
20	Magnet	Magnetic material
21	Ball bearing	Carbon steel
22	Piston packing	NBR
23	Tube-head gasket	NBR
24	Cushioning seal	NBR
25	O-ring	NBR
26	Piston o-ring	NBR
27	Rod packing	NBR
28	Key	Carbon steel

Accessories

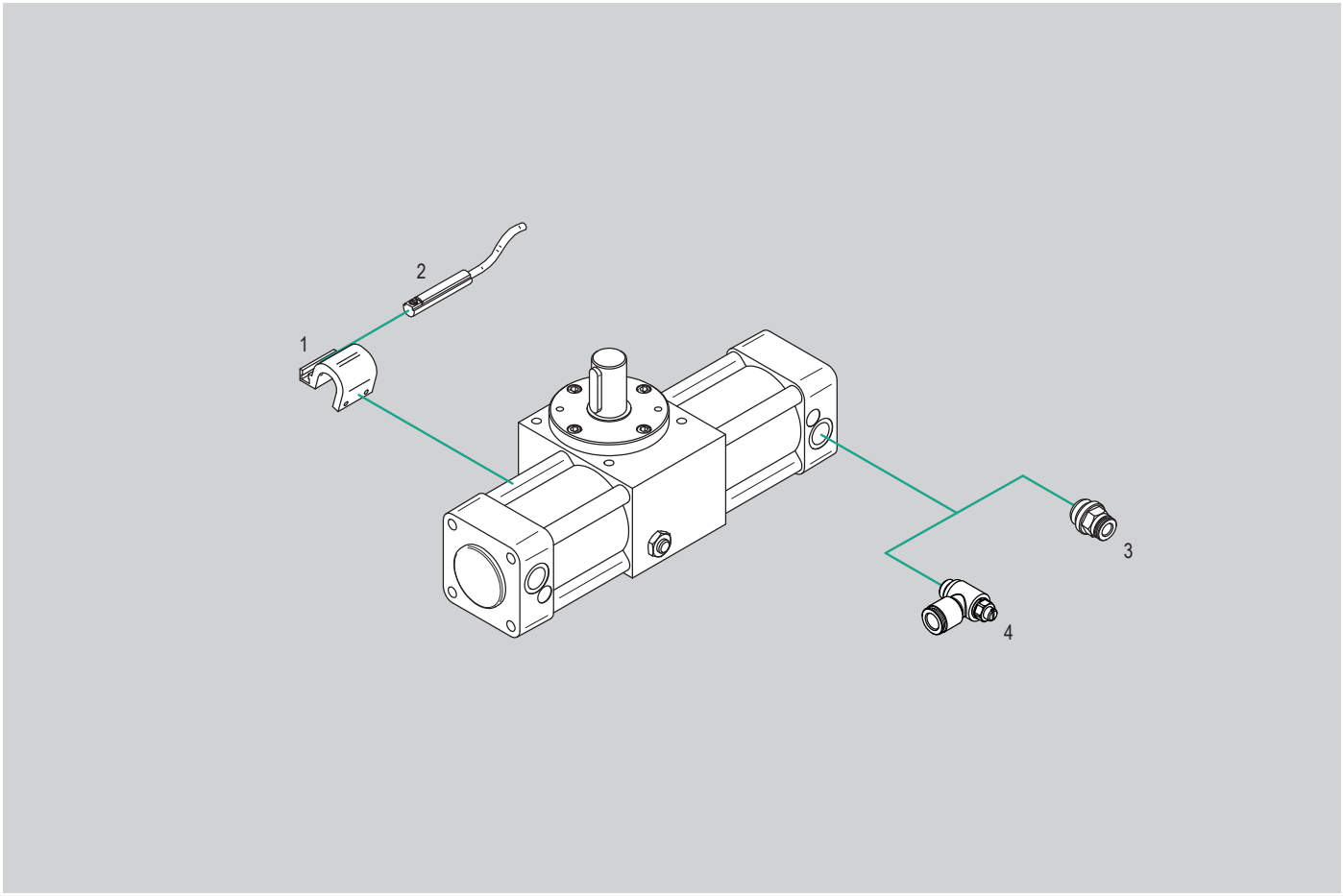

N.	Cylinder bore	Item	Description	Compliance	Matching			Code page	Data sheet page
					CRTH	CRTHD	CRTF		
1	Ø 40 - 63 - 80	AS..	Bracket for T type magnetic reed switches	-	●	●	●	1.40.90	1.120.3
2		ASV..	Magnetic reed switch T groove		●	●	●		1.110.10
3	Ø 40 - 63 - 80	R..	Push-in fittings		●	●	●	4.2.1	
4	Ø 40 - 63 - 80	V..C	Flow controls, for cylinders		●	●	●	4.94.1	

Key

● allowed matching; – not allowed matching

Main features

40 - 63 - 80
Bores Ø

90°-180°
Angle of rotation


Double acting
Magnetic
Male pinion

CRTH
Type



40 - 63 - 80
Bores Ø

90°-180°
Angle of rotation


Double acting
Magnetic
Double Male
Pinion

CRTHD
Type



40 - 63 - 80
Bores Ø

90°-180°
Angle of rotation


Double acting
Magnetic
Female Pinion

CRTF
Type



Technical data

Bore Ø mm		40		63		80	
Fluid		Filtered compressed air with or without lubrication. Lubrication, if started, must be continued.					
Angle of rotation		90°	180°	90°	180°	90°	180°
Adjustable angle		±5°					
Pinion diameter		16		24		28	
Pressure range		1,3 ÷ 7 bar					
Maximum allowable axial thrust (Kg)		10		12		20	
Cushion angle		74°		75°		80°	
Temperature range		-10°C ÷ +60°C					
Weight (g)	CRTH	3000	3100	5400	5800	9750	10300
	CRTHD	3050	3150	5550	5950	9990	10540
	CRTF	2840	2940	5070	5470	9990	9740

Rotating direction and adjustable angle

Type: **CRTH, CRTHD**

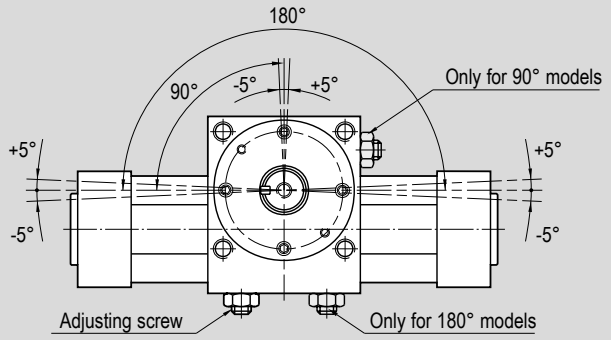

Type: **CRTF**

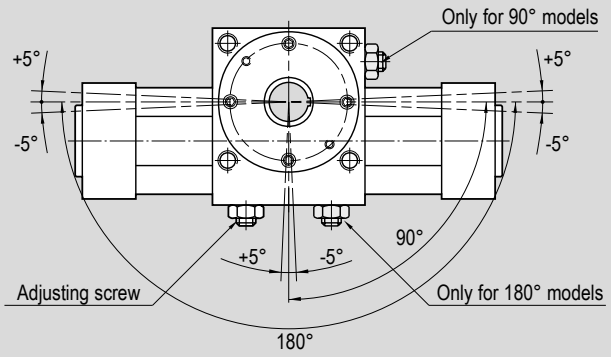

Output torque table

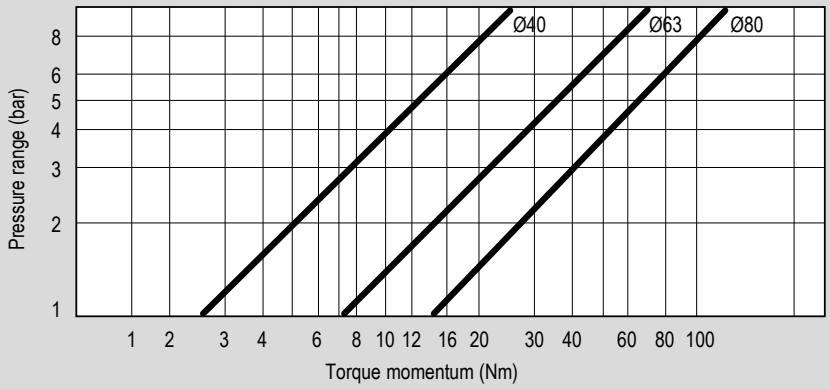

Air consumption for a complete circle

unit: litres/cycle

Ø (mm)	Rotation	Pressure range									
		1 bar	2 bar	3 bar	4 bar	5 bar	6 bar	7 bar	8 bar	9 bar	10 bar
40	90°	0,1571	0,2352	0,3133	0,3915	0,4696	0,5477	0,6259	0,7040	0,7821	0,8603
	180°	0,3141	0,4704	0,6267	0,7829	0,9392	1,0955	1,2517	1,4080	1,5643	1,7205
63	90°	0,4383	0,6564	0,8744	1,0925	1,3105	1,5286	1,7466	1,9647	2,1828	2,4008
	180°	0,8766	1,3127	1,7488	2,1850	2,6211	3,0572	3,4933	3,9294	4,3655	4,8016
80	90°	0,8480	1,2698	1,6917	2,1135	2,5354	2,9572	3,3791	3,8009	4,2228	4,6447
	180°	1,6959	2,5396	3,3834	4,2271	5,0708	5,9145	6,7582	7,6019	8,4456	9,2893

Dimensions

Type: **CRTH**

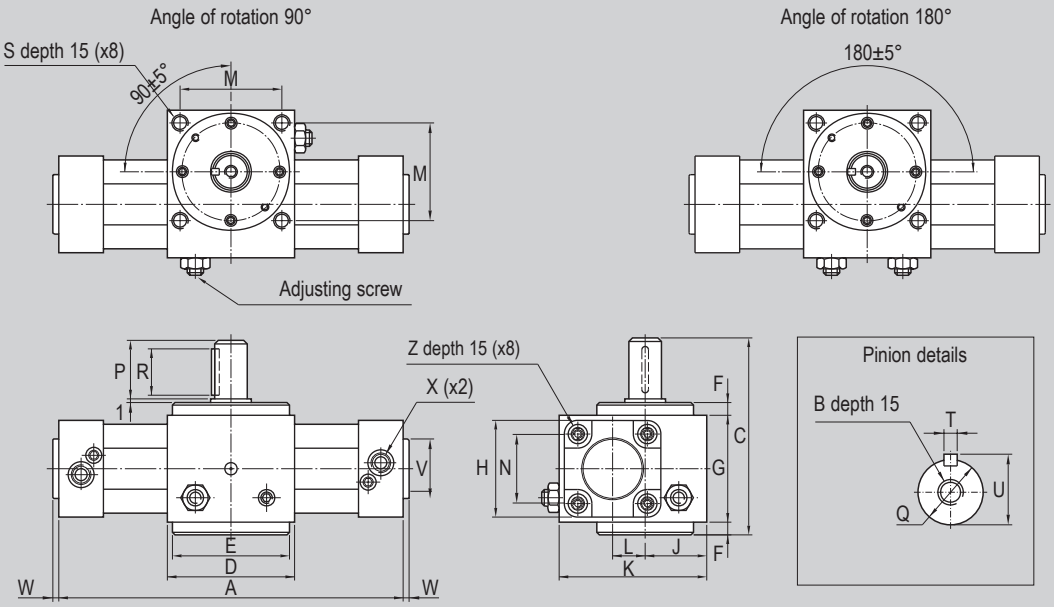

Ø (mm)	A		C	D	ØE	F	G	□H	J	K	L	M	□N	B	P	ØQ h6	R	S	T	U	ØV	W	X	Z
	90°	180°																						
40	263	326	112	75	72	8	65	53	37,5	93	27,5	60	38	M5	30	16	25	M6	5	18	35	4	1/4”	M6
63	306	377	138	90	82	10	75	75	42,5	110	30	70	56,5	M8	42	24	36	M8	8	27	45	5	3/8”	M8
80	343	428	170	105	96	12	95	95	51,5	135	36	82	72	M8	50	28	45	M10	8	31	45	6	3/8”	M10

Type: **CRTHD**

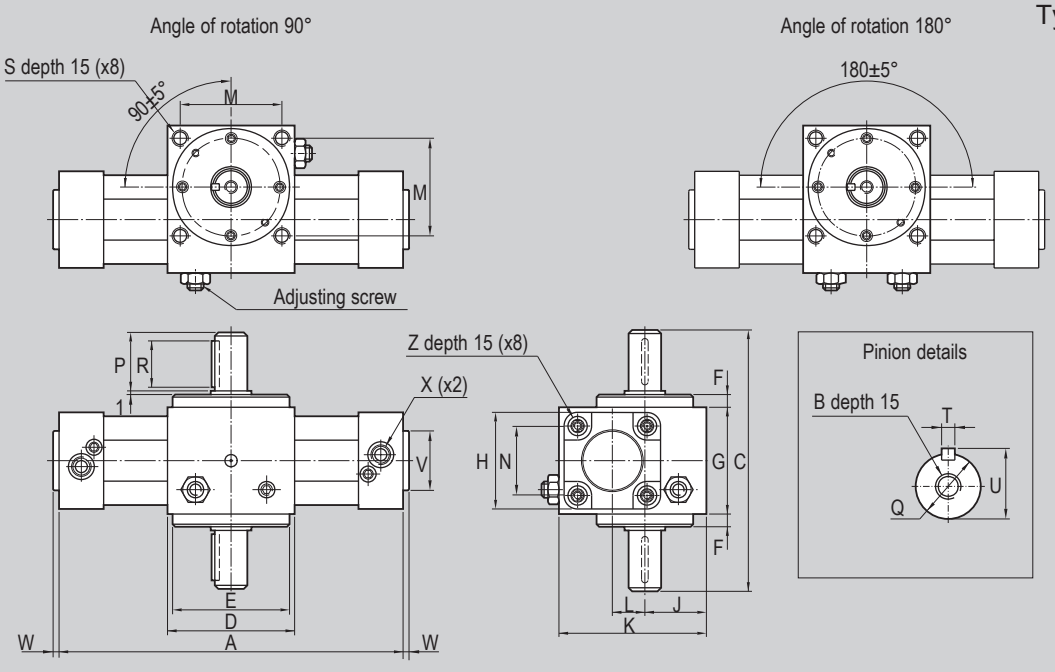

Ø (mm)	A		C	D	ØE	F	G	□H	J	K	L	M	□N	B	P	ØQ h6	R	S	T	U	ØV	W	X	Z
	90°	180°																						
40	263	326	143	75	72	8	65	53	37,5	93	27,5	60	38	M5	30	16	25	M6	5	18	35	4	1/4”	M6
63	306	377	181	90	82	10	75	75	42,5	110	30	70	56,5	M8	42	24	36	M8	8	27	45	5	3/8”	M8
80	343	428	221	105	96	12	95	95	51,5	135	36	82	72	M8	50	28	45	M10	8	31	45	6	3/8”	M10

Dimensions

Type: **CRTF**

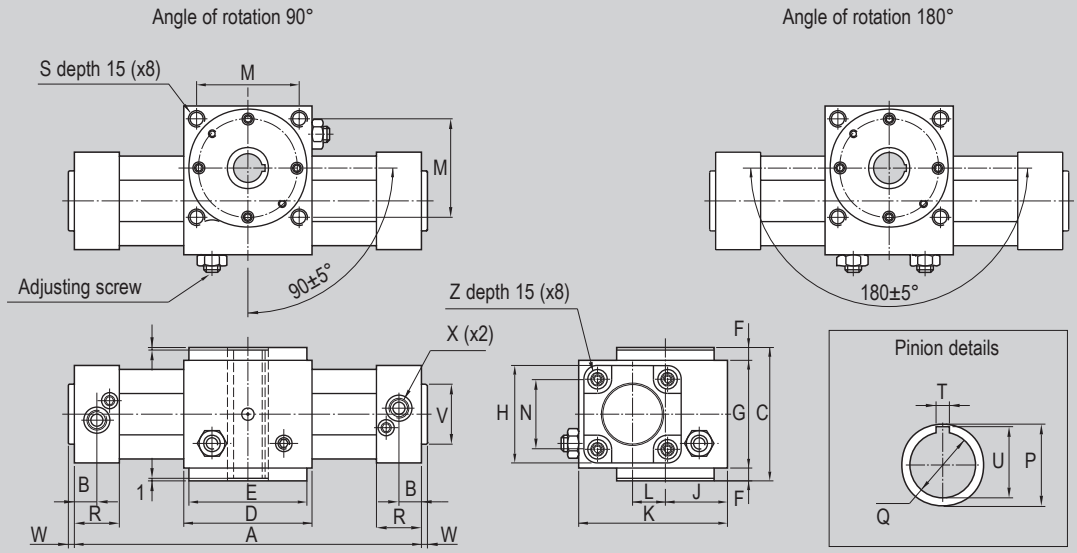

Ø (mm)	A		C	D	ØE	F	G	□H	J	K	L	M	□N	B	ØP	ØQ h7	R	S	T	U	ØV	W	X	Z
	90°	180°																						
40	263	326	81	75	72	8	65	53	37,5	93	27,5	60	38	15	25	14	30	M6	5	16,5	35	4	1/4”	M6
63	306	377	95	90	82	10	75	75	42,5	110	30	70	56,5	16	30	19	32	M8	6	22	45	5	3/8”	M8
80	343	428	119	105	96	12	95	95	51,5	135	36	82	72	19	35	24	38	M10	6	27,5	45	6	3/8”	M10

Magnetic reed switch T groove ASV..



For cylinder Ø mm	Code	Item	Cylinder matching*
40 ÷ 80	070946	ASV1C525	CRT..
	071863	ASV1C550	
	071864	ASV1C51K	
	071189	ASV1C5M8	
	073639	ASV4D225	
	070246	ASV4D2M8	
	074900	ASV7N225	
	070247	ASV7N2M8	
	070372	ASV7M2M8	
	072918	ASV1H525	

*With bracket type AS.. for magnetic reed switches T groove

Bracket AS.. (for magnetic reed switches T groove)



For cylinder Ø mm	Code	Item	Cylinder matching
40	072908	AS101	CRT..
63	072909	AS102	
80	072910	AS103	

ROTARY VANE
Cylinders



Find out our
key products



- **Solution for most applications**
- **Easy and intuitive choice**
- **Excellent value for money**
- **Wide availability**
- **Fast delivery**

Features and certifications

Series of rotary vane cylinders, available in bores from Ø 4 to 25, double acting, with reduced overall dimensions. With fixed and adjustable rotation angles and equipped with elastic dampers (hydraulic shock absorbers in adjustable versions for bores from Ø 12 to 25) to relieve the impacts of vanes.
Supplied as standard in compliance with Reach and RoHS directives.

Type ARTM Ø 4 ÷ 10

from page 1.50.20



Rotary vane cylinders available in bores from Ø 4 to 10, double acting non-magnetic, with elastic dampers.
Rotation angle: 90°, 180° or 270°.



Type ARTMC Ø 4 ÷ 10

from page 1.50.20



Rotary vane cylinders available in bores from Ø 4 to 10, double acting magnetic, with elastic dampers.
Rotation angle: 90°, 180° or 270°



Type ARTML Ø 4 ÷ 10

from page 1.50.20



Rotary vane cylinders available in bores from Ø 4 to 10, double acting non-magnetic, with adjustable rotation angles and elastic dampers.
Rotation angle: 90°, 180° or 270°



Type ARTMLC Ø 4 ÷ 10

from page 1.50.20



Rotary vane cylinders available in bores from Ø 4 to 10, double acting magnetic, with adjustable rotation angles and elastic dampers.
Rotation angle: 90°, 180° or 270°



Type ARTMF Ø 4 ÷ 10

from page 1.50.40



Flanged rotary vane cylinders available in bores from Ø 4 to 10, double acting non-magnetic, with elastic dampers.
Rotation angle: 90°, 180° or 270°.



Type ARTMFC Ø 4 ÷ 10

from page 1.50.40



Flanged rotary vane cylinders available in bores from Ø 4 to 10, double acting magnetic, with elastic dampers.
Rotation angle: 90°, 180° or 270°



Type ARTMFL Ø 4 ÷ 10

from page 1.50.40



Flanged rotary vane cylinders available in bores from Ø 4 to 10, double acting non-magnetic, with adjustable rotation angles and elastic dampers.
Rotation angle: 90°, 180° or 270°



Type ARTMFLC Ø 4 ÷ 10

from page 1.50.40



Flanged rotary vane cylinders available in bores from Ø 4 to 10, double acting magnetic, with adjustable rotation angles and elastic dampers.
Rotation angle: 90°, 180° or 270°



Type ARTM Ø 12 ÷ 25

from page 1.50.60



Rotary vane cylinders available in bores from Ø 12 to 25, double acting non-magnetic, with elastic dampers.
Rotation angle: 90°, 180° or 270°.



Type ARTMC Ø 12 ÷ 25

from page 1.50.60



Rotary vane cylinders available in bores from Ø 12 to 25, double acting magnetic, with elastic dampers.
Rotation angle: 90°, 180° or 270°



Type ARTML Ø 12 ÷ 25

from page 1.50.60



Rotary vane cylinders available in bores from Ø 12 to 25, double acting non-magnetic, with adjustable rotation angles and hydraulic shock absorbers.
Rotation angle: 90°, 180° or 270°



Type ARTMLC Ø 12 ÷ 25

from page 1.50.60



Rotary vane cylinders available in bores from Ø 12 to 25, double acting magnetic, with adjustable rotation angles and hydraulic shock absorbers.
Rotation angle: 90°, 180° or 270°



Code key

Size	/	Angle of rotation	Type
30	**/**	**90°**	**ARTM**

Size	
10	= Ø 4
15	= Ø 5
20	= Ø 6
30	= Ø 8
40	= Ø 10
50	= Ø 12
63	= Ø 15
80	= Ø 17
100	= Ø 25

Angle of rotation
90°, 180°, 270°

Type
ARTM Double acting Non-magnetic With fixed rotation angle
ARTMC Double acting Magnetic With fixed rotation angle
ARTML Double acting Non-magentic With adjustable rotation angle
ARTMLC Double acting Magnetic With adjustable rotation angle
ARTMF (1) Flanged Double acting Non-magnetic With fixed rotation angle
ARTMFC (1) Flanged Double acting Magnetic With fixed rotation angle
ARTMFL (1) Flanged Double acting Non-magnetic With adjustable rotation angle
ARTMFLC (1) Flanged Double acting Magnetic With adjustable rotation angle

How to order

Size		Angle	Type
30	**/**	**90°**	**ARTM**

Note

For standard materials see page 1.50.5

(1) Only for bores from Ø 4 to 10

Materiali standard

Type: **ARTM**
ARTMF
Ø 4 ÷ 10

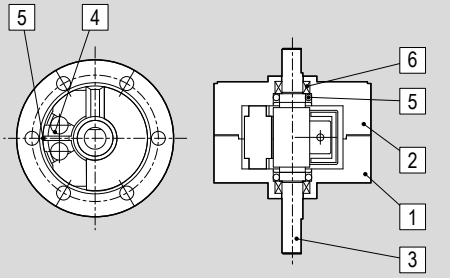

Type: **ARTML**
ARTMFL
Ø 4 ÷ 10

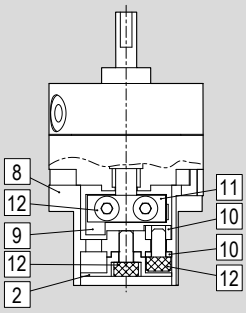

Type: **ARTMC**
ARTMFC
Ø 4 ÷ 10

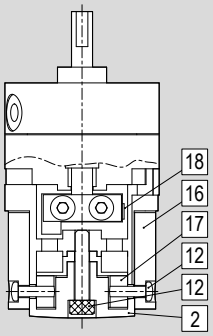

Type: **ARTMLC**
ARTMFLC
Ø 4 ÷ 10

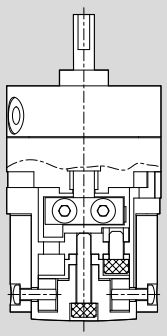

Type: **ARTM**
ARTMC
Ø 12 ÷ 25

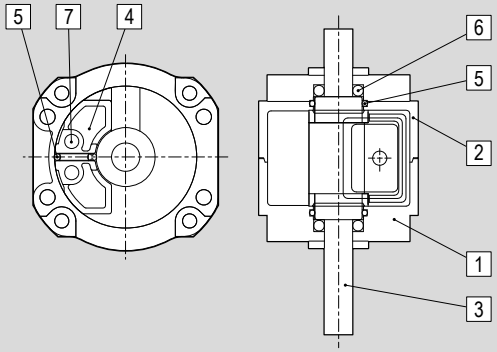

Type: **ARTML**
ARTMLC
Ø 12 ÷ 25

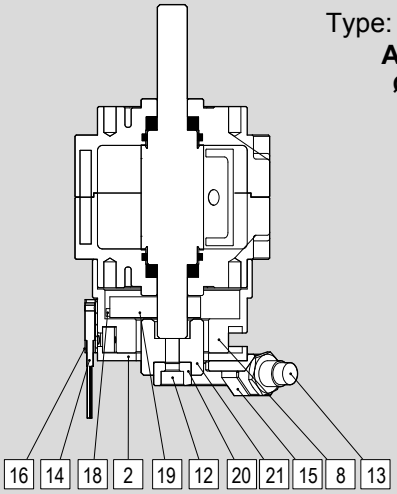

Posizione	Descrizione	Materiale	
		Ø 4 ÷ 10	Ø 20 ÷ 25
1	Front cover	Aluminium alloy	
2	End cover	Aluminium alloy	
3	Rod	Steel alloy	
4	Dampers	Plastic - Steel	
5	O-ring	NBR	
6	Bearing	Steel	
7	Position pin	-	Zinc alloy
8	Base	Zinc alloy	Stainless Steel
9	Stopper	Stainless Steel	-
10	Stopper base	Steel	-
11	Blocco	Stainless Steel	-
12	Screw	Steel alloy	Stainless Steel
13	Shoche absorber (x2)	-	Steel alloy
14	Magnetic reed switch	-	Steel alloy
15	Angle adjustment	-	Aluminium
16	Mounting base	Aluminium alloy	
17	Base and lump	Aluminium alloy	-
18	Magnet	TME	Steel alloy
19	Magnet seat	-	Steel alloy
20	Rocker arm	-	Steel
21	Rocker arm seat	-	Steel

Accessories

Type: **ARTM..**
Ø 4 ÷ 10

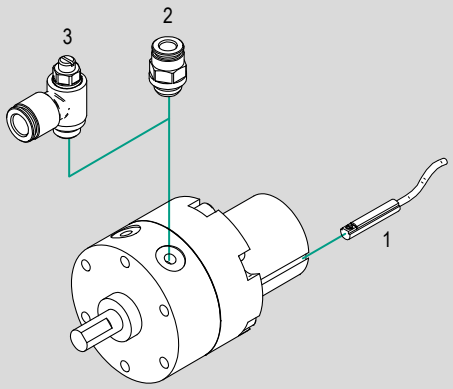

Type: **ARTM..**
Ø 12 ÷ 25

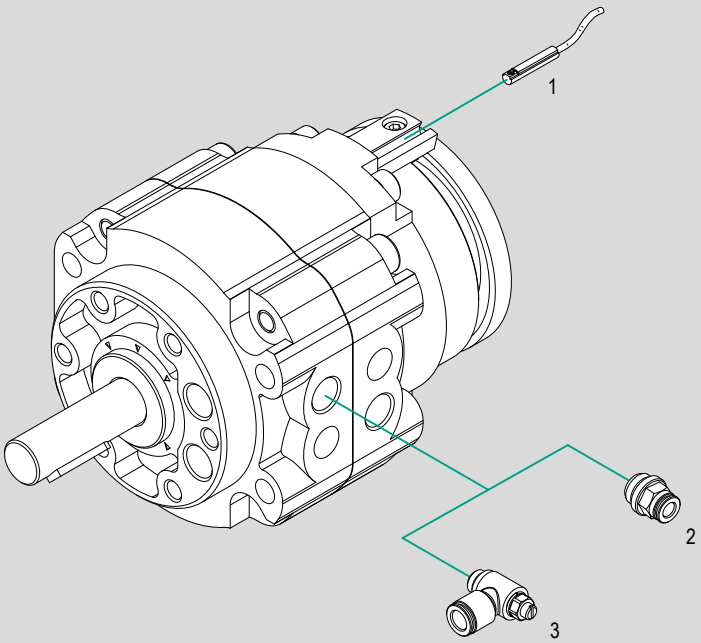

N.	Cylinder bore	Item	Description	Compliance	Matching				Code page	Data sheet page
					ARTM ARTMF	ARTMC ARTMFC	ARTML ARTMFL	ARTMLC ARTMFLC		
1	Ø 4 ÷ 25	ASC..	Magnetic reed switch C groove	-	–	●	–	●	1.50.90	1.110.30
2	Ø 4 ÷ 25	R..	Push-in fittings		●	●	●	●	4.2.1	
3	Ø 4 ÷ 25	V..C	Flow controls, for cylinders		●	●	●	●	4.94.1	

Key
● allowed matching; – not allowed matching

Main features

4 ÷ 10
Bores Ø


Double acting
Non magnetic

ARTM
Type



4 ÷ 10
Bores Ø


Double acting
Magnetic

ARTMC
Type



Main features

4 ÷ 10
Bores Ø


Double acting
Non magnetic
Adjustable angle

ARTML
Type



4 ÷ 10
Bores Ø


Double acting
Magnetic
Adjustable angle

ARTMLC
Type



Technical data

Size		10	15	20	30	40
Bore		Ø 4	Ø 5	Ø 6	Ø 8	Ø 10
Fluid		Filtered compressed air with or without lubrication. Lubrication, if started, must be continued.				
Angle of rotation		90° - 180° - 270°				
Pressure range		1,5 ÷ 7 bar				
Temperature range		0°C ÷ +50°C				
Ports		M5				
Torque momentum (Nm) at 6 bar		0,14	0,38	0,81	1,8	3,8
Admissible kinetic energy (J)		0,0015	0,001	0,003	0,02	0,04
Weight (g)	ARTM	28	48	112	200	342
	ARTMC ARTML ARTMLC	78	116	240	390	604

Output torque table

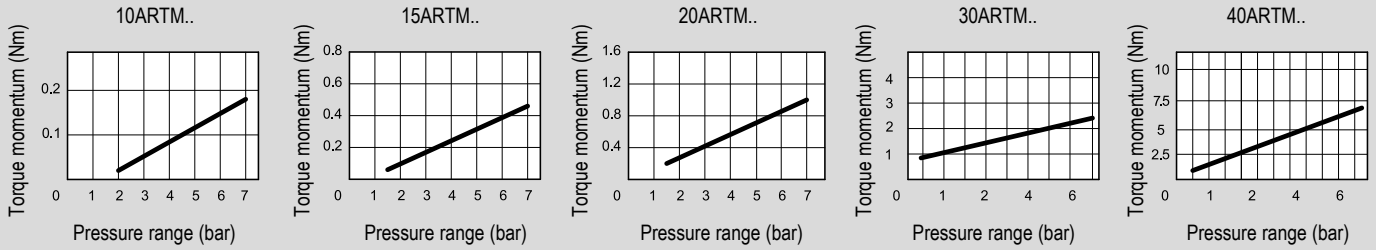

Assembly type

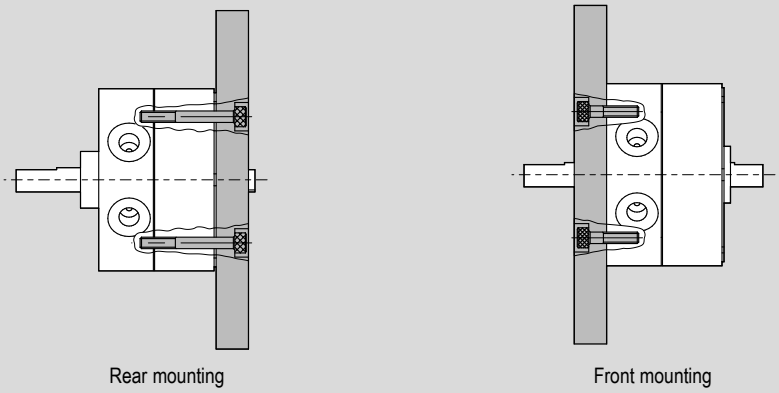

Angle of rotation

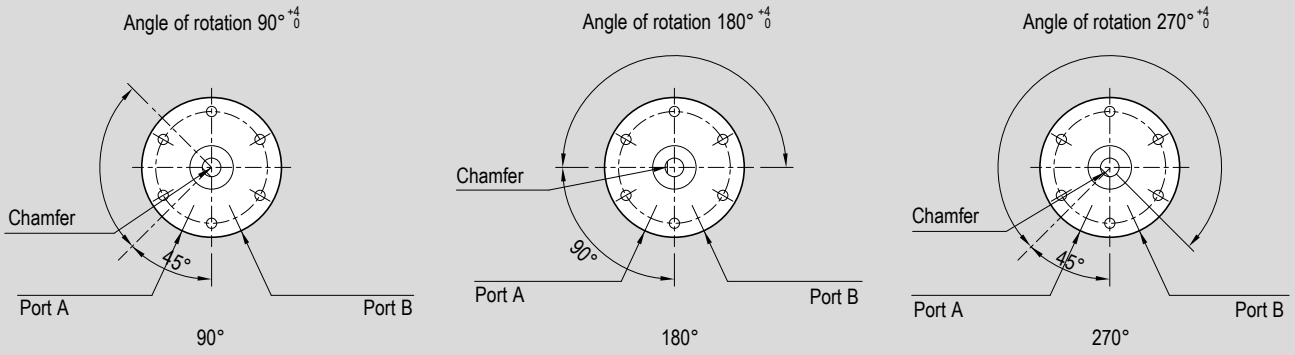

Rotation angle settings

90° rotation setting

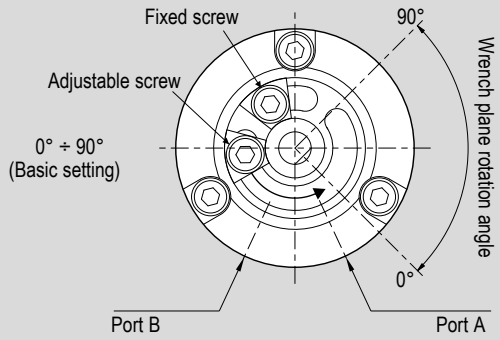

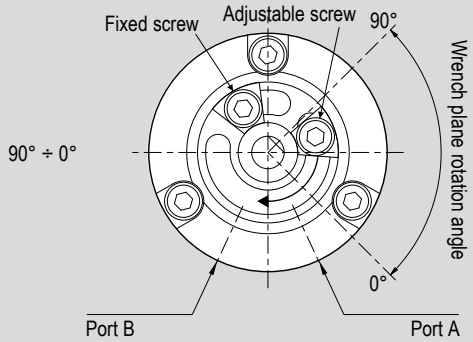

180° rotation setting

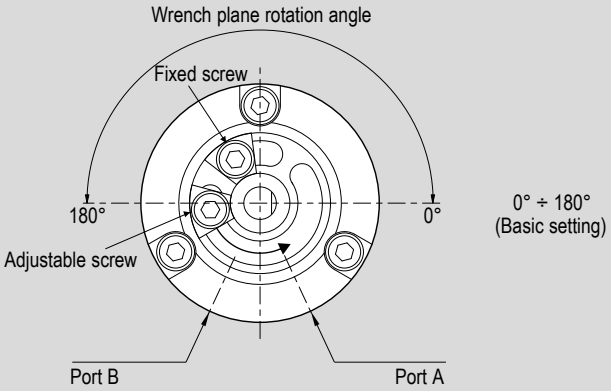

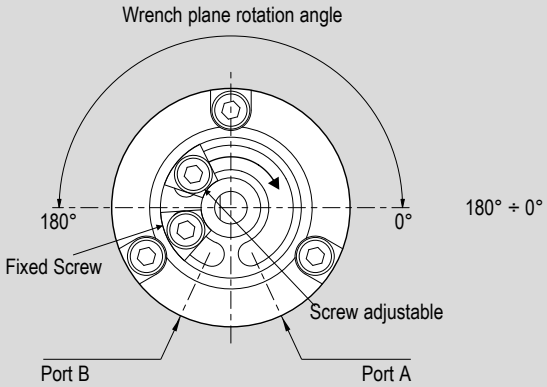

270° rotation setting

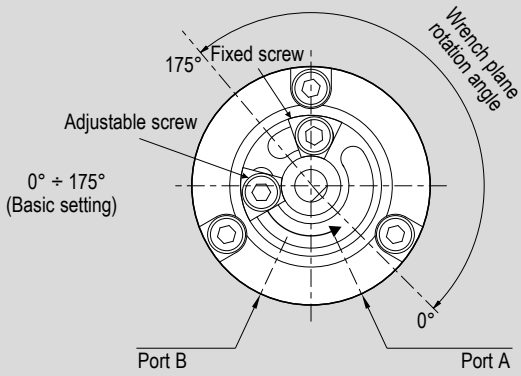

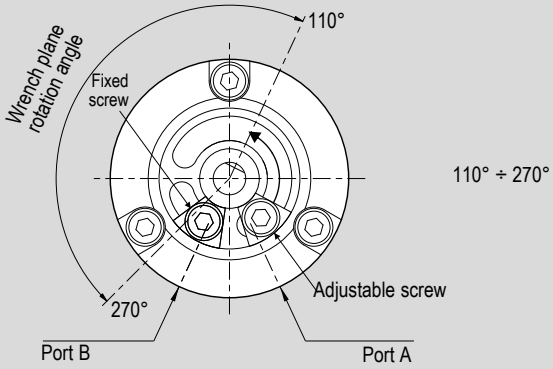

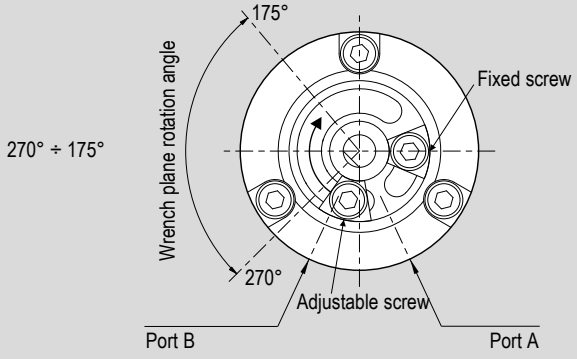

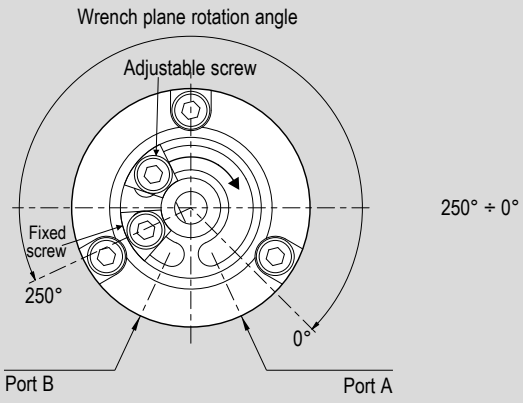

Dimensions

Type: **ARTM**
Ø 4 ÷ 10

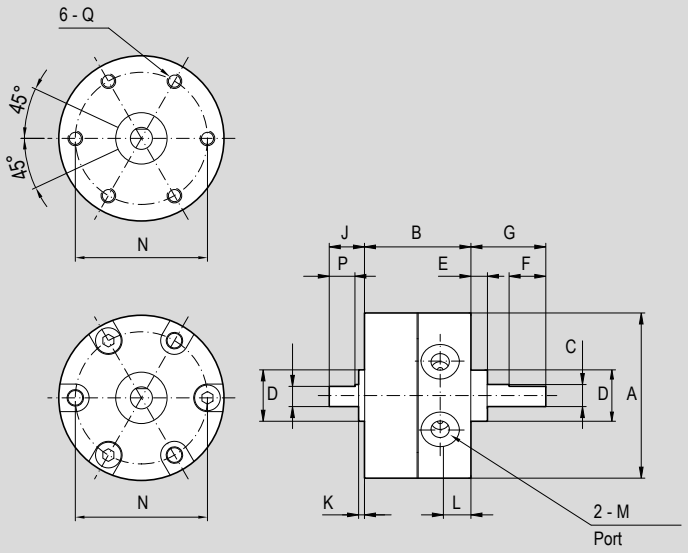

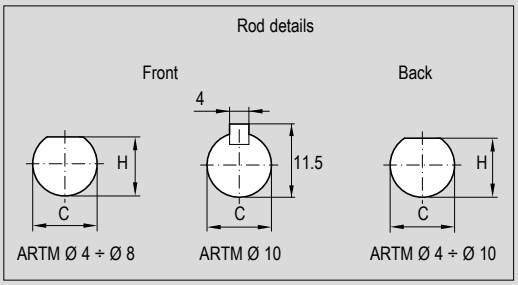

Ø (mm)	size	ØA	B	ØC	ØD	E	F	G	H	P	J	K	L	M	ØN	Q
4	10	30	17	4	9	3	9	14	3,5	5	8	1	4,2	M5x0,8	24	M3x0,5
5	15	3	20,1	5	12	4	10	18	4,5	6	9	1,5	5	M5x0,8	29	M3x0,5
6	20	44	29,1	6	14	4,5	10	20,3	5,5	7	9,6	1,6	8,5	M5x0,8	36	M4x0,7
8	30	51	40	8	16	5	12	22	7,5	8	13	2	11	M5x0,8	43	M5x0,8
10	40	64	45	10	25	6,5	22	30	9	9	15	4,5	9,5	M5x0,8	56	M5x0,8

Type: **ARTMC**
Ø 4 ÷ 10

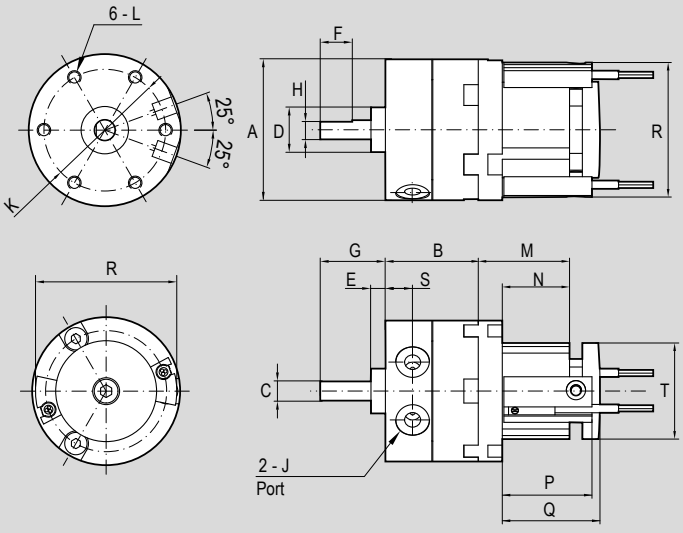

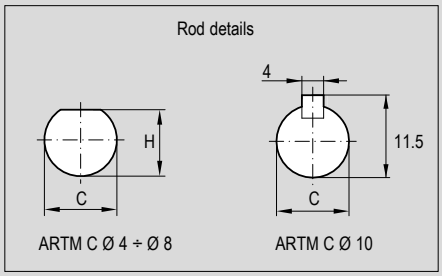

Ø (mm)	size	ØA	B	ØC	ØD	E	F	G	H	S	J	ØK	L	M	N	ØT	P	Q	ØR
4	10	30	17	4	9	3	9	14	3,5	4,2	M5x0,8	24	M3x0,5	24	18	18	23,3	24	29
5	15	35	20,1	5	12	4	10	18	4,5	5	M5x0,8	29	M3x0,5	28	22	24	27,3	29,5	34
6	20	44	29,1	6	14	4,5	10	20,3	5,5	8,5	M5x0,8	36	M4x0,7	28,5	21	30	28	30,5	42
8	30	51	40	8	16	5	12	22	7,5	11	M5x0,8	43	M5x0,8	32,5	24	34	30,8	34	47
10	40	64	45	10	25	6,5	22	30	-	9,5	M5x0,8	56	M5x0,8	34,5	26	34	33	36	47

Dimensions

Type: **ARTML**
Ø 4 ÷ 10

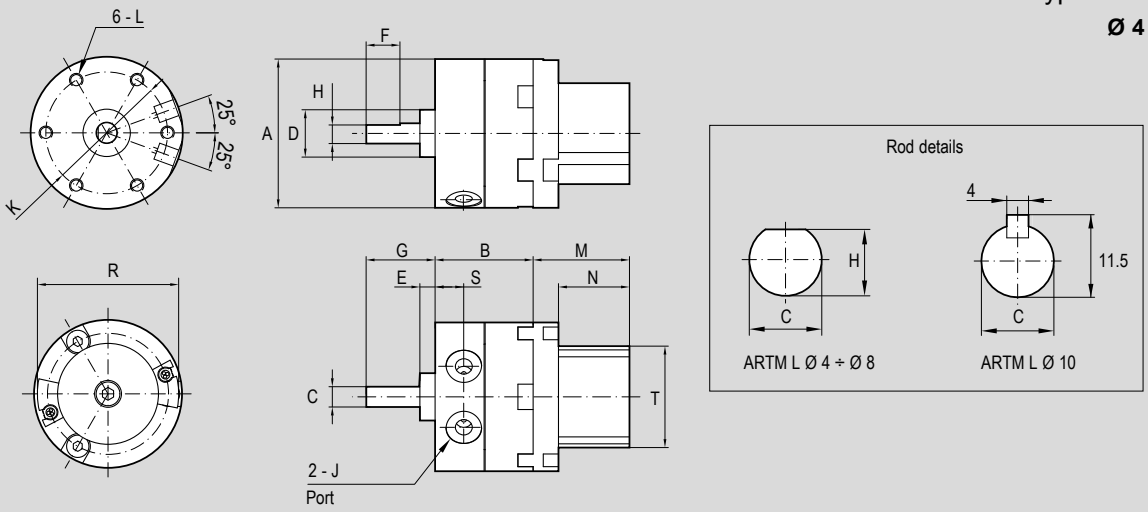

Ø (mm)	size	ØA	B	ØC	ØD	E	F	G	H	S	J	K	L	M	N	ØT	ØR
4	10	30	17	4	9	3	9	14	3,5	4,2	M5x0,8	24	M3x0,5	24	18	18	29
5	15	35	20,1	5	12	4	10	18	4,5	5	M5x0,8	29	M3x0,5	28	22	24	34
6	20	44	29,1	6	14	4,5	10	20,3	5,5	8,5	M5x0,8	36	M4x0,7	28,5	21	30	42
8	30	51	40	8	16	5	12	22	7,5	11	M5x0,8	43	M5x0,8	32,5	24	34	47
10	40	64	45	10	25	6,5	22	30	-	9,5	M5x0,8	56	M5x0,8	34,5	26	34	47

Type: **ARTMLC**
Ø 4 ÷ 10

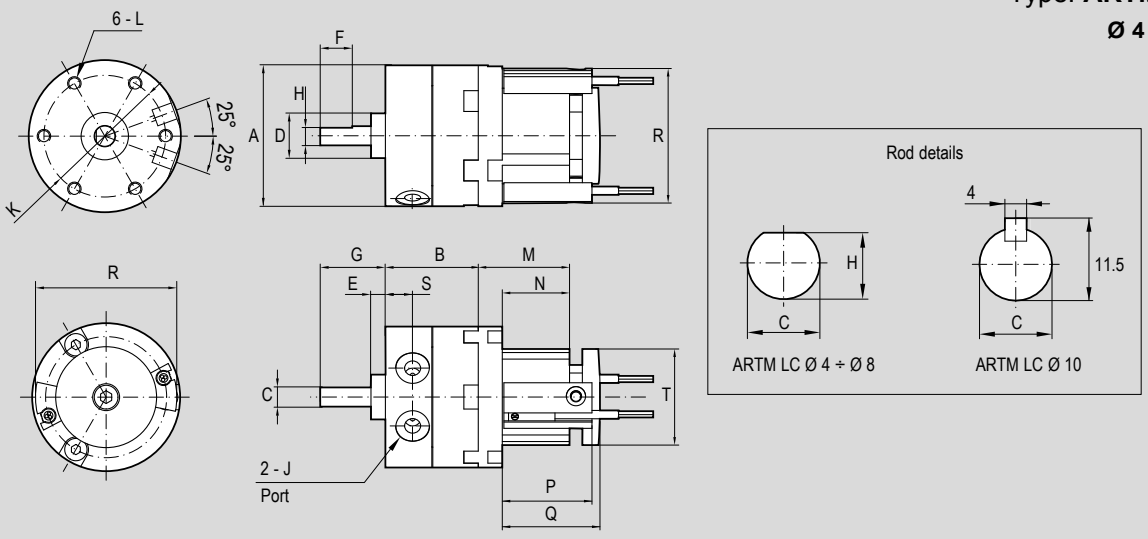

Ø (mm)	size	ØA	B	ØC	ØD	E	F	G	H	S	J	ØK	L	M	N	ØT	P	Q	ØR
4	10	30	17	4	9	3	9	14	3,5	4,2	M5x0,8	24	M3x0,5	24	18	18	23,3	24	29
5	15	35	20,1	5	12	4	10	18	4,5	5	M5x0,8	29	M3x0,5	28	22	24	27,3	29,5	34
6	20	44	29,1	6	14	4,5	10	20,3	5,5	8,5	M5x0,8	36	M4x0,7	28,5	21	30	28	30,5	42
8	30	51	40	8	16	5	12	22	7,5	11	M5x0,8	43	M5x0,8	32,5	24	34	30,8	34	47
10	40	64	45	10	25	6,5	22	30	-	9,5	M5x0,8	56	M5x0,8	34,5	26	34	33	36	47

Main features

4 ÷ 10
Bores Ø


Double acting
Non magnetic

ARTMF
Type



4 ÷ 10
Bores Ø


Double acting
Magnetic

ARTMFC
Type



Main features

4 ÷ 10
Bores Ø


Double acting
Non magnetic
Adjustable angle

ARTMFL
Type



4 ÷ 10
Bores Ø


Double acting
Magnetic
Adjustable angle

ARTMFLC
Type



Technical data

Size		10	15	20	30	40
Bore		Ø 4	Ø 5	Ø 6	Ø 8	Ø 10
Fluid		Filtered compressed air with or without lubrication. Lubrication, if started, must be continued.				
Angle of rotation		90° - 180° - 270°				
Pressure range		1,5 ÷ 7 bar				
Temperature range		0°C ÷ +50°C				
Ports		M5				
Torque momentum (Nm) at 6 bar		0,14	0,38	0,81	1,8	3,8
Admissible kinetic energy (J)		0,0015	0,001	0,003	0,02	0,04
Weight (g)	ARTMF	41	70	138	268	438
	ARTMFC ARTMFL ARTMFLC	91	138	266	468	700

Output torque table

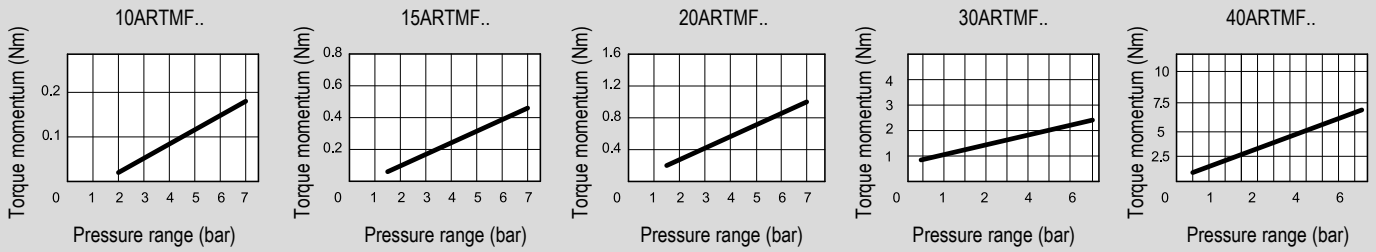

Assembly type

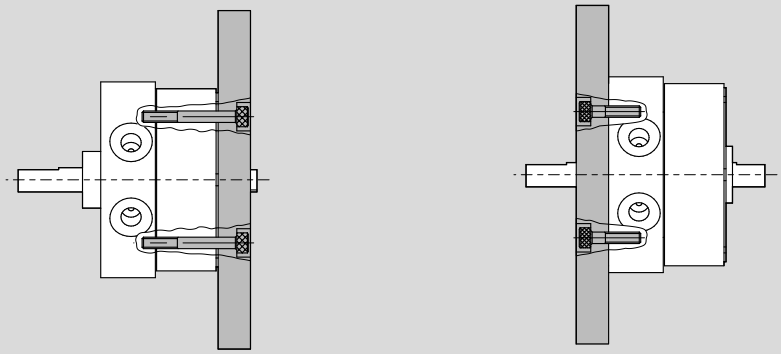

Angle of rotation

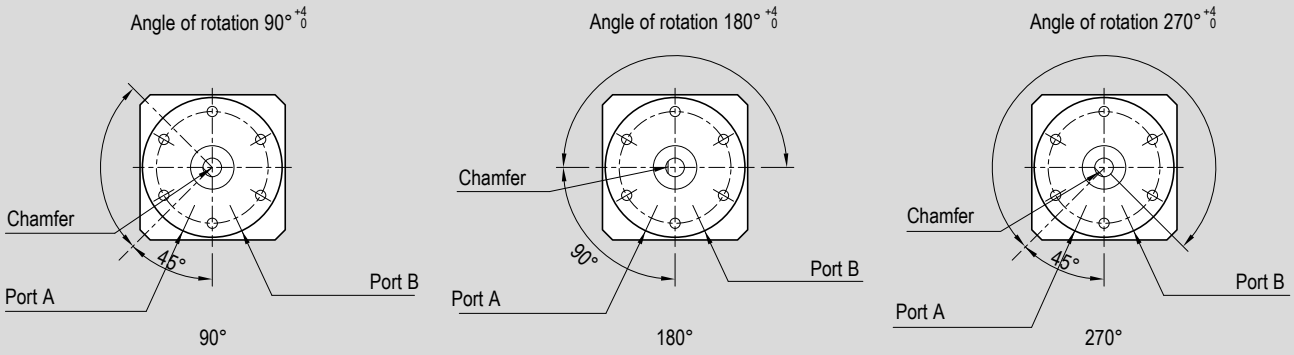

Rotation angle settings

90° rotation setting

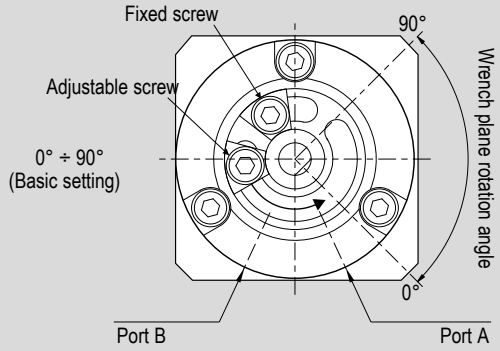

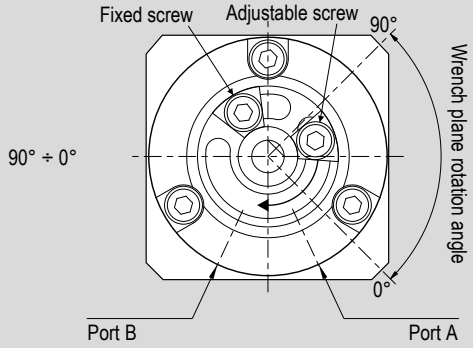

180° rotation setting

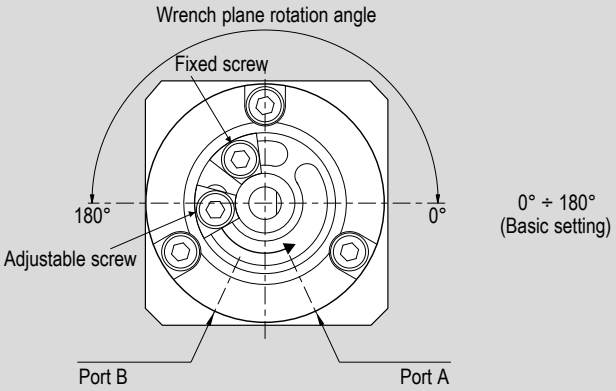

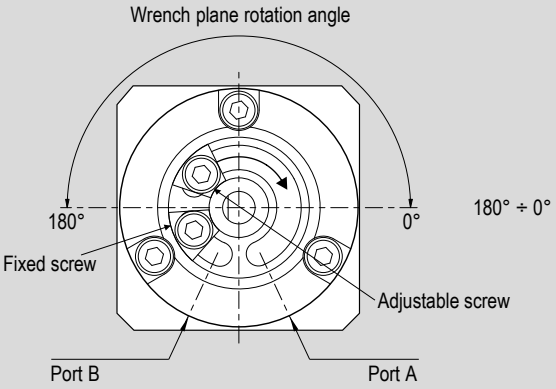

270° rotation setting

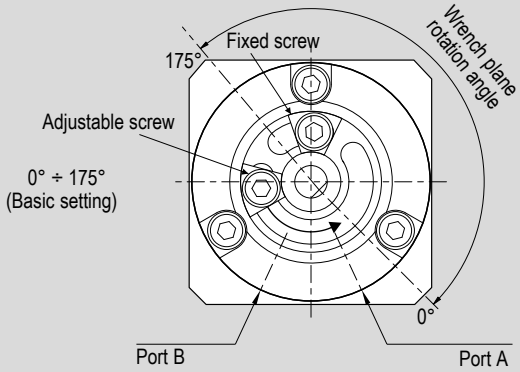

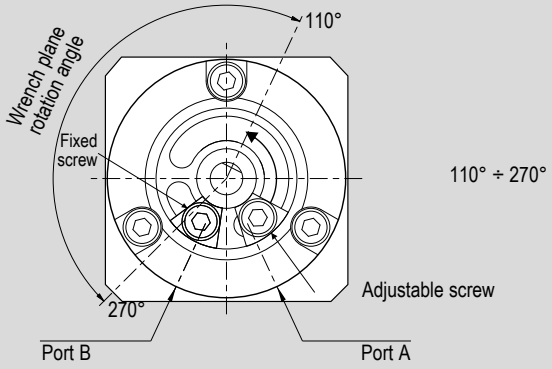

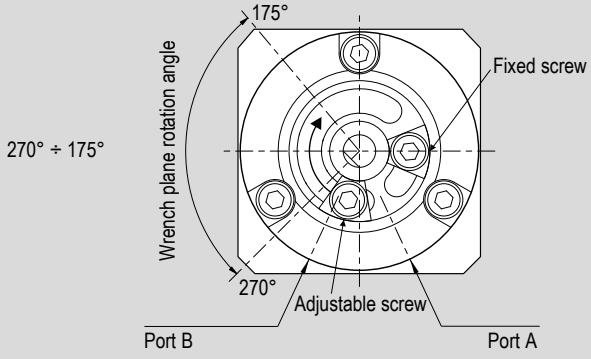

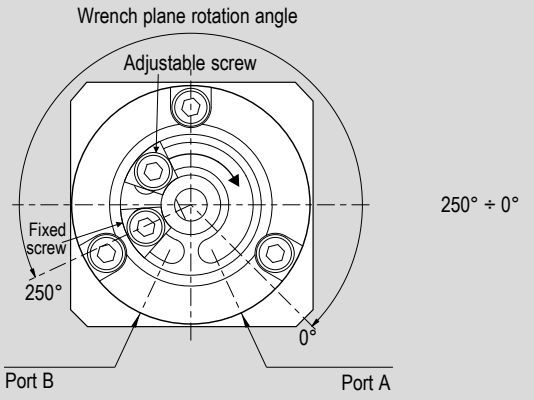

Dimensions

Type: **ARTMF**
Ø 4 ÷ 10

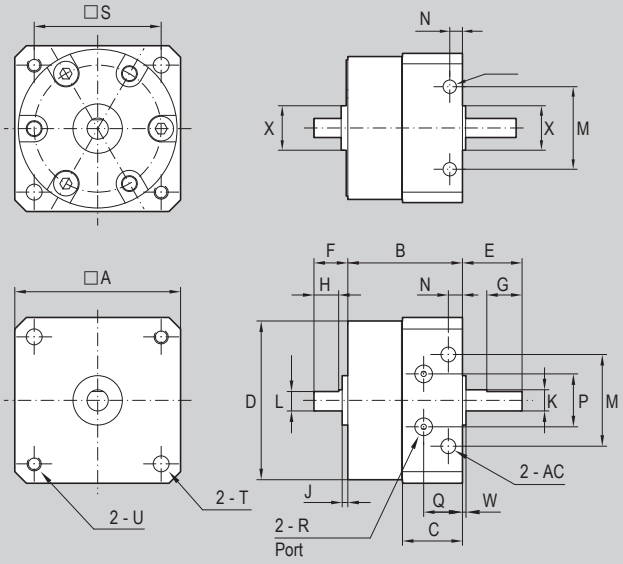

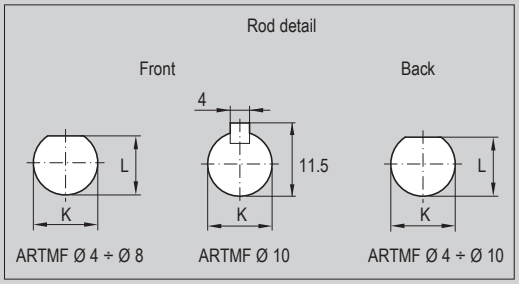

Ø (mm)	size	□A	B	C	ØD	E	F	G	H	ØX	J	ØK	L	M	N	AC	P	Q	R	□S	T	U	V	W
4	10	31	22	13,3	30	14	8	9	5	9	1	4	3,5	17	3	3,5	10,5	9,2	M5x0,8	25	3,5	M3x0,5	24	1
5	15	36	25,7	15,5	35	18	9	10	6	12	1,5	5	4,5	21	3	3,5	10,5	10,5	M5x0,8	29	3,5	M3x0,5	29	1,5
6	20	44	33,6	19	44	20	10	10	7	14	1,6	6	5,5	26	4	4,2	15	13	M5x0,8	36	4,5	M4x0,7	36	1
8	30	52	47,5	27,2	51	22	13	12	8	16	2	8	7,5	29	4,5	5,5	13,5	18,5	M5x0,8	42	5,5	M5x0,8	43	2
10	40	64	53	30,4	64	30	15	22	9	25	4,5	10	9	38	5	5,5	19	14	M5x0,8	52	5,5	M5x0,8	56	3

Type: **ARTMFC**
Ø 4 ÷ 10

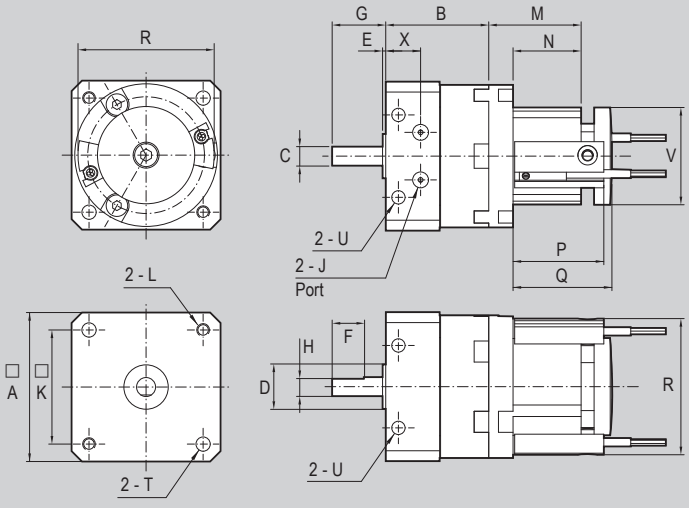

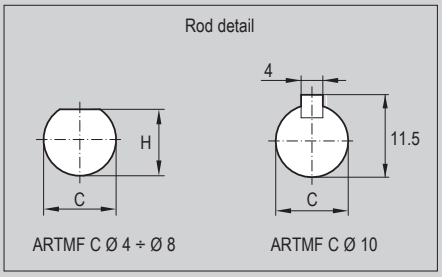

Ø (mm)	size	□A	B	ØC	ØD	E	F	G	H	X	J	□K	L	M	N	ØV	P	Q	ØR	S	T	U
4	10	31	22	4	9	1	9	14	3,5	9,2	M5x0,8	25	M3x0,5	24	18	18	23,3	24	29	30	3,5	3,5
5	15	36	25,7	5	12	1,5	10	18	4,5	10,5	M5x0,8	29	M3x0,5	28	22	24	27,3	29,5	34	35	3,5	3,5
6	20	44	33,6	6	14	1	10	20	5,5	13	M5x0,8	36	M4x0,7	28,5	21	30	28	30,5	42	44	4,5	4,2
8	30	52	47,5	8	16	2	12	22	7,5	18,5	M5x0,8	42	M5x0,8	32,5	24	34	30,8	34	47	51	5,5	5,5
10	40	64	53	10	25	3	22	30	-	14	M5x0,8	52	M5x0,8	34,5	26	34	33	36	47	64	5,5	5,5

Dimensions

Type: **ARTMFL**

Ø 4 ÷ 10

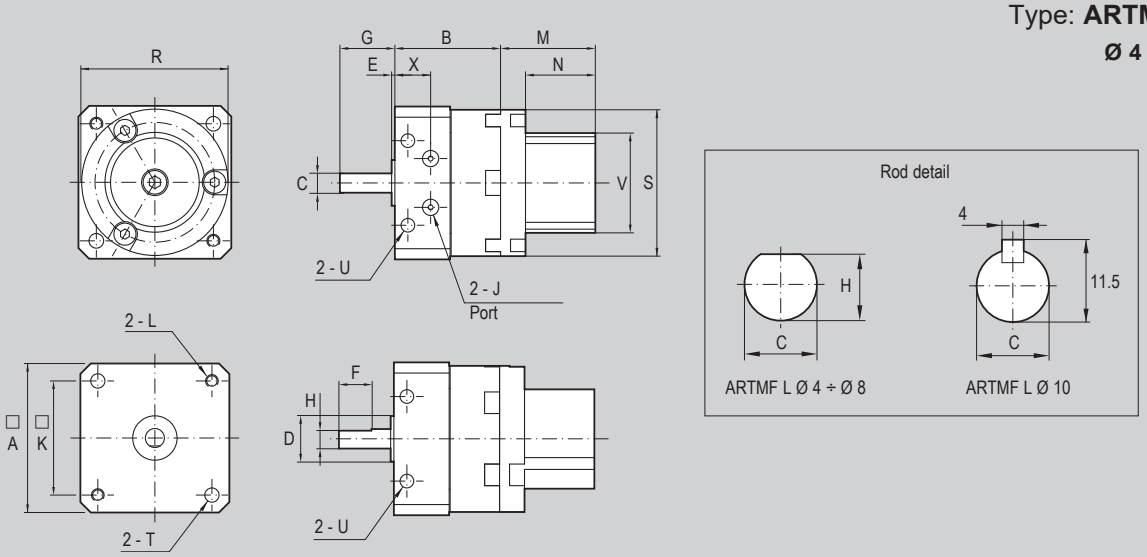

Ø (mm)	size	□A	B	ØC	ØD	E	F	G	H	X	J	□K	L	M	N	ØV	P	Q	ØR	ØS	T	U
4	10	31	22	4	9	1	9	14	3,5	9,2	M5x0,8	25	M3x0,5	24	18	18	23,3	24	29	30	3,5	3,5
5	15	36	25,7	5	12	1,5	10	18	4,5	10,5	M5x0,8	29	M3x0,5	28	22	24	27,3	29,5	34	35	3,5	3,5
6	20	44	33,6	6	14	1	10	20	5,5	13	M5x0,8	36	M4x0,7	28,5	21	30	28	30,5	42	44	4,5	4,2
8	30	52	47,5	8	16	2	12	22	7,5	18,5	M5x0,8	42	M5x0,8	32,5	24	34	30,8	34	47	51	5,5	5,5
10	40	64	53	10	25	3	22	30	-	14	M5x0,8	52	M5x0,8	34,5	26	34	33	36	47	64	5,5	5,5

Type: **ARTMFLC**

Ø 4 ÷ 10

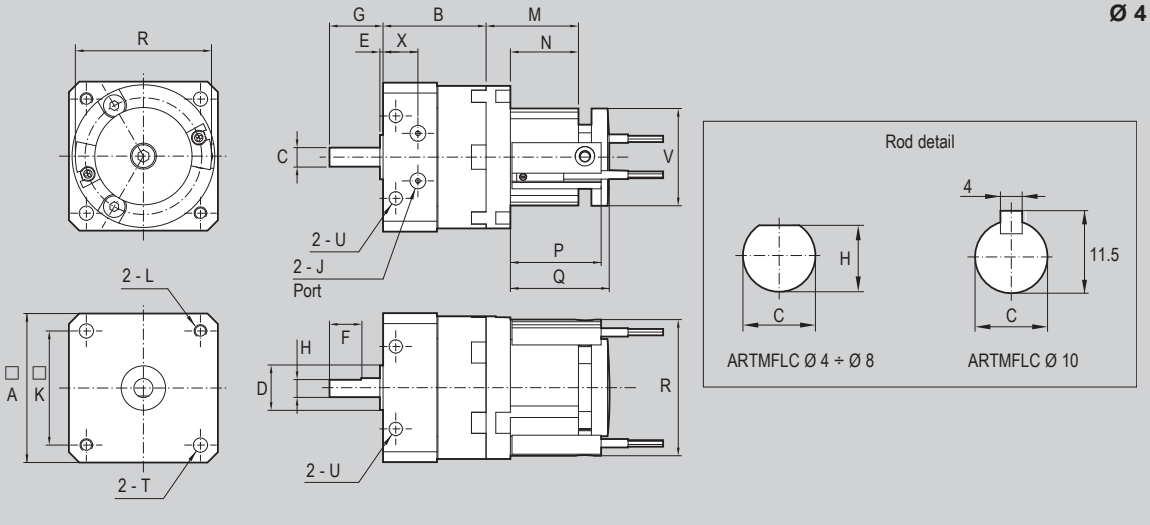

Ø (mm)	size	□A	B	ØC	ØD	E	F	G	H	X	J	□K	L	M	N	ØV	P	Q	ØR	ØS	T	U
4	10	31	22	4	9	1	9	14	3,5	9,2	M5x0,8	25	M3x0,5	24	18	18	23,3	24	29	30	3,5	3,5
5	15	36	25,7	5	12	1,5	10	18	4,5	10,5	M5x0,8	29	M3x0,5	28	22	24	27,3	29,5	34	35	3,5	3,5
6	20	44	33,6	6	14	1	10	20	5,5	13	M5x0,8	36	M4x0,7	28,5	21	30	28	30,5	42	44	4,5	4,2
8	30	52	47,5	8	16	2	12	22	7,5	18,5	M5x0,8	42	M5x0,8	32,5	24	34	30,8	34	47	51	5,5	5,5
10	40	64	53	10	25	3	22	30	-	14	M5x0,8	52	M5x0,8	34,5	26	34	33	36	47	64	5,5	5,5

Main features

12 ÷ 25
Bores Ø


Double acting
Non magnetic

ARTM
Type



12 ÷ 25
Bores Ø


Double acting
Magnetic

ARTMC
Type



Main features

12 ÷ 25
Bores Ø


Double acting
Non magnetic
Adjustable angle

ARTML
Type



12 ÷ 25
Bores Ø


Double acting
Magnetic
Adjustable angle

ARTMLC
Type



Technical data

Size		50	63	80	100
Bore		Ø 12	Ø 15	Ø 17	Ø 25
Fluid		Filtered compressed air with or without lubrication. Lubrication, if started, must be continued.			
Angle of rotation		90° - 180° - 270°			
Pressure range		1,5 ÷ 7 bar			
Temperature range		0°C ÷ +50°C			
Ports		1/8"		1/4"	
Torque momentum (Nm) at 6 bar		5	10	18	35
Admissible kinetic energy (J)		0,082	0,12	0,39	0,6
Weight (g)	ARTM ARTMC	760	1290	1920	3560
	ARTML ARTMLC	1100	1500	2300	3900

Output torque table

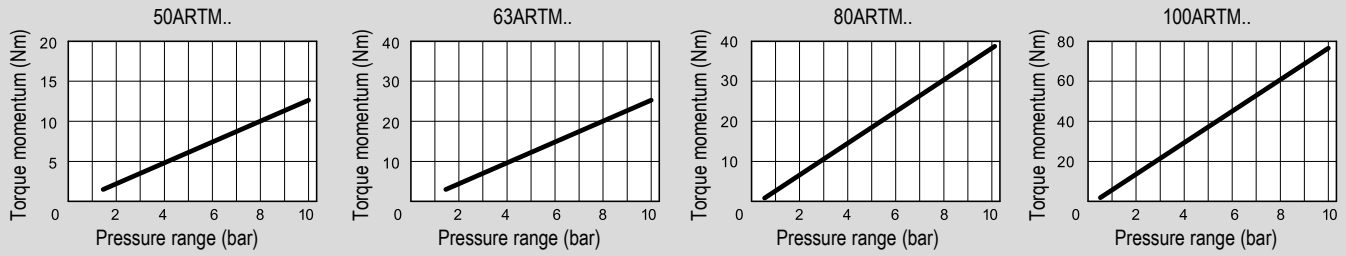

Angle of rotation

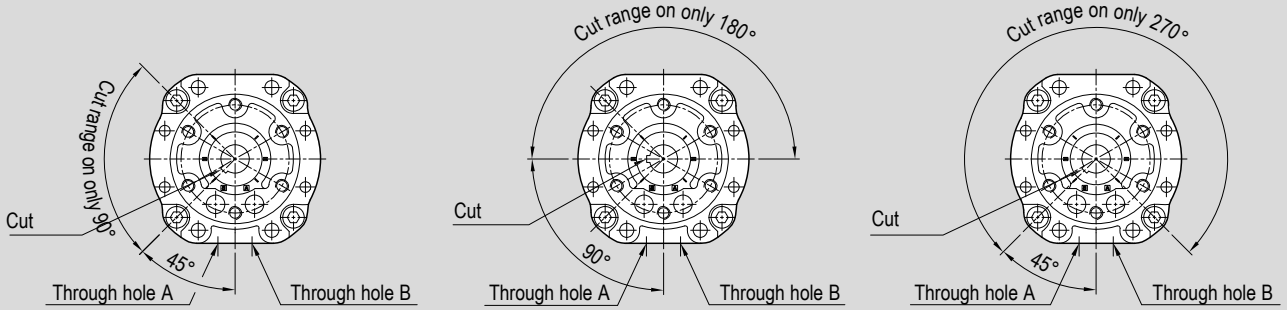

Angle of rotation*

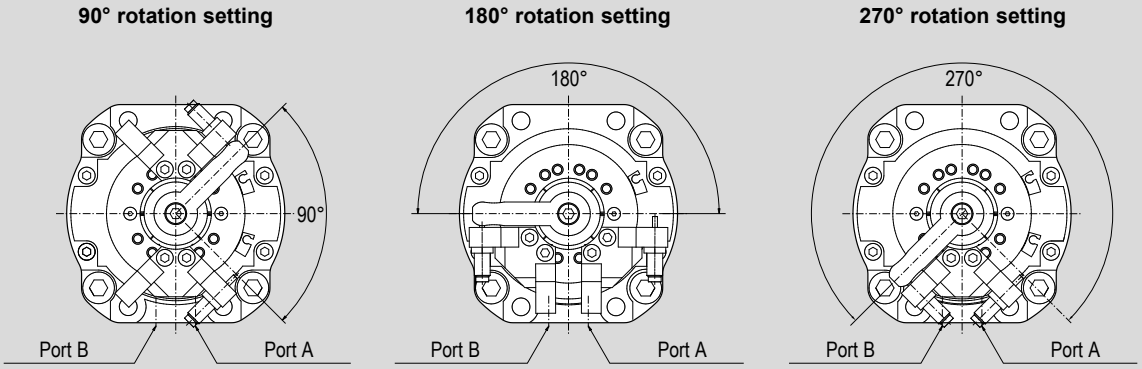

*With shock absorbers for 10° rotation adjustment

Assembly type

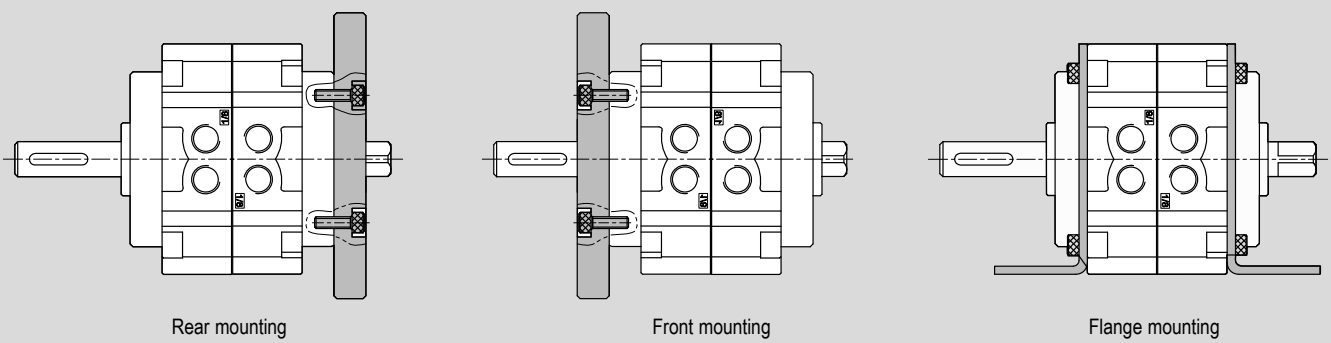

Dimensions

Type: **ARTM**
Ø 12 ÷ 25

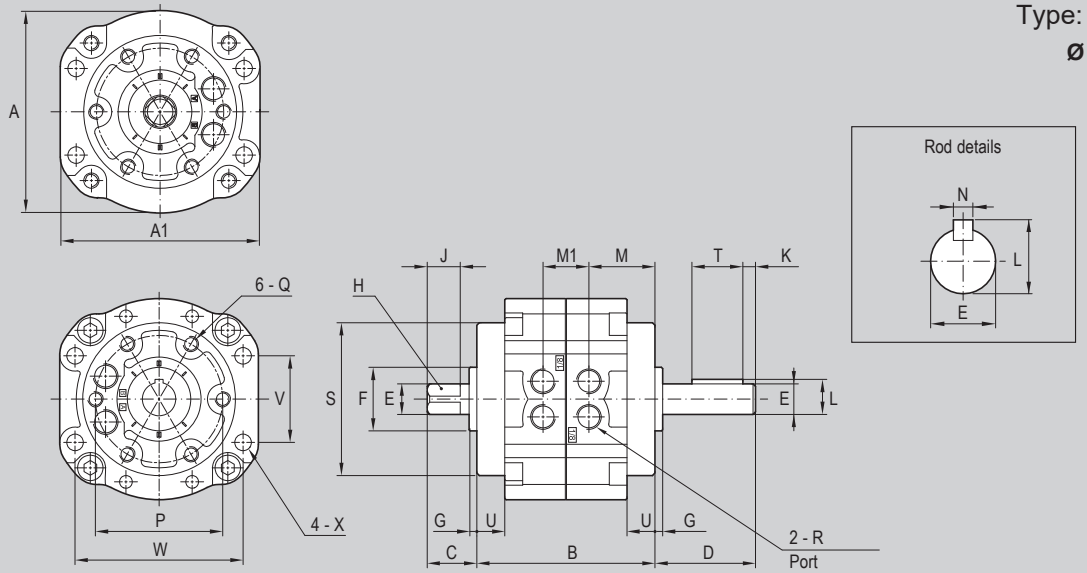

Ø (mm)	size	ØA	A1	B	C	D	ØE	ØF	G	□H	N	J	K	L	M	M1	ØP	Q	R	ØS	T	U	V	W	ØX
12	50	79	78	70	19,5	39,5	12	25	3	10	4	13	5	13,5	26	18,2	50	M6x1,0	RC1/8”	60	20	11	34	66	6,5
15	63	98	98	80	21	45	15	28	3	12	5	14	5	17	28,9	22,2	60	M8x1,25	RC1/8”	75	25	14	39	83	9
17	80	110	110	90	23,5	53,5	17	30	3	13	5	16	5	19	30	30,2	70	M8x1,25	RC1/4”	88	41	15	48	94	9
25	100	140	140	103	30	65	25	45	4	19	7	22	5	28	35,4	32,2	80	M10x1,5	RC1/4”	108	40	11,5	60	120	11

Type: **ARTMC, ARTML, ARTMLC**
Ø 12 ÷ 25

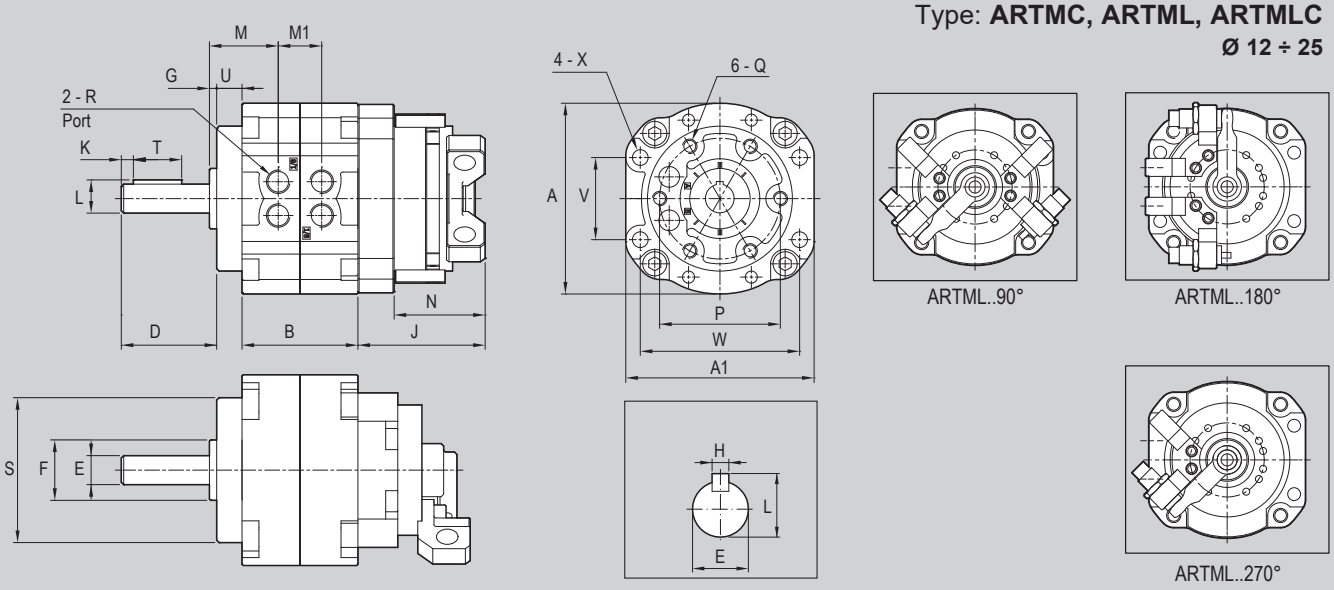

Ø (mm)	size	ØA	A1	B	D	ØE	ØF	G	H	J	K	L	M	M1	N	ØP	Q	R	ØS	T	U	V	W	ØX
12	50	79	78	48	50,5	12	25	3	4	52,7	5	13,5	29	18	37,7	50	M6x1,0	RC1/8”	60	20	11	34	66	6,5
15	63	98	98	52	59	15	28	3	5	56,4	5	17	31,9	22,2	37,7	60	M8x1,25	RC1/8”	75	25	14	39	83	9
17	80	110	110	60	68,5	17	30	3	5	58,9	5	19	33	30	39,2	70	M8x1,25	RC1/4”	88	36	15	48	94	9
25	100	140	140	80	76,5	25	45	4	7	62,9	5	28	39,4	32,2	39,2	90	M10x1,5	RC1/4”	108	40	11,5	60	120	11

Magnetic reed switch C groove ASC..

	For cylinder Ø mm	Code	Item	Cylinder matching
	4 ÷25	070248	ASC1C525	ARTMC ARTMLC ARTMFC ARTMFLC
		070249	ASC7N2M8	
		070382	ASC7M2M8	

ROTARY
Actuators

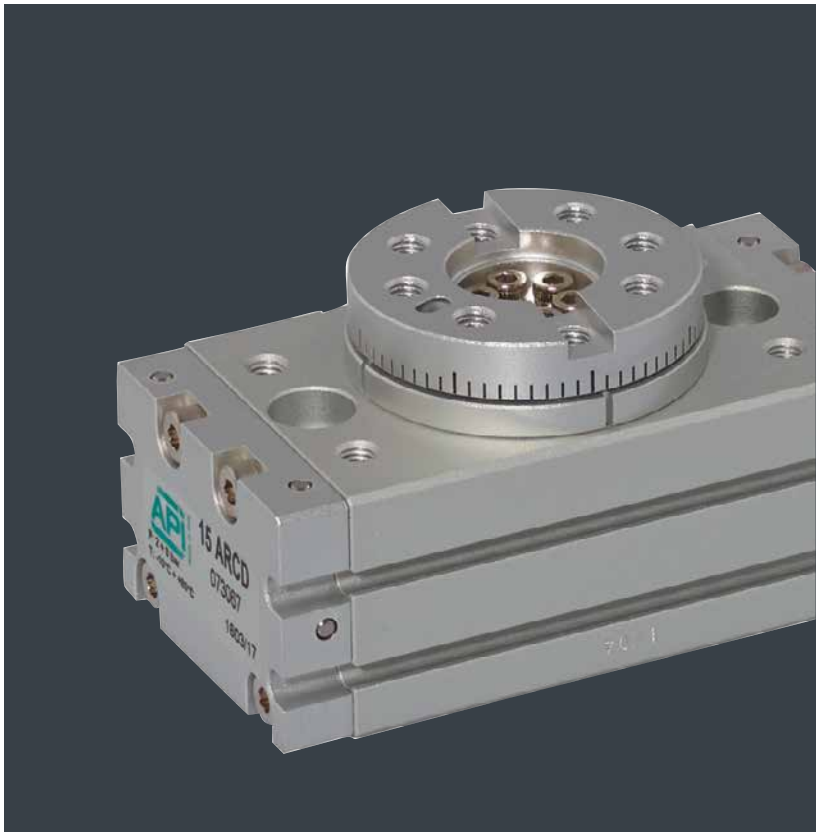

Find out our
key products

- **Solution for most applications**
- **Easy and intuitive choice**
- **Excellent value for money**
- **Wide availability**
- **Fast delivery**

Features and certifications

Series of rotary actuators, available in bores from Ø 10 to 63, double acting, magnetic.
Supplied as standard in compliance with Reach and RoHS directives.

Type ARC Ø 10 ÷ 63

from page 1.52.20



Rotary actuators with double rack, with rotation angles 90°÷180° and adjustment 0°÷190°. Double acting, magnetic, with grooves on the body allowing the direct mounting of magnetic reed switches. Equipped as standard with mechanical stoppers, on request these can be supplied with hydraulic shock absorbers.



Type ARP Ø 15 ÷ 32

from page 1.52.50



Rotary actuators with piston and external mechanical stoppers. Rotation angles 90°and 180°. Double acting, magnetic, with grooves on the body allowing the direct mounting of magnetic reed switches. Equipped as standard with mechanical stoppers, on request these can be supplied with hydraulic shock absorbers.



Options

Description	Symbol	Suffix
Shock absorbers (from Ø 15)		**D**

The options, when this is possible, can be combined with each other. For options matching and code key, see the tables below.

Options matching

Series	Bore	Model	Standard options matching
			D (Ø15÷63)
ARC	Ø 10 ÷ 63	Standard	●
ARP	Ø 15 ÷ 32	Standard	●

Key

● allowed matching; – not allowed matching

Code key

Bore	/	Angle of rotation*	Type	Options
20	**/**	**90°**	**ARP**	**D**
Ø 10, 12, 15, 18, 20, 25, 28, 32, 40, 50, 63		90° - 180°	ARC Double acting magnetic ARP Double acting magnetic	D

How to order

Bore		Angle	Type	Options
20	**/**	**90°**	**ARP**	**D**

Notes

*Only for type ARP

For further information on options and their matching, see tables above.

Standard materials

Type: **ARC**

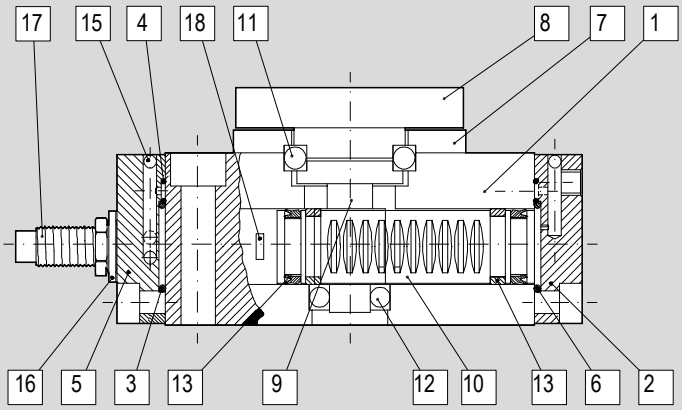

Position	Description	Materials
1	Body	Anodised aluminium
2	Front head	Anodised aluminium
3	O-ring	NBR
4	O-ring	NBR
5	Rear head	Anodised aluminium
6	O-ring	NBR
7	Bearing covers	Anodised aluminium
8	Rotating plate	Anodised aluminium
9	Rod	Hardened steel
10	Rack	Stainless Steel
11	Spherical bearing	Steel
12	Spherical bearing	Steel
13	Piston seal	NBR
14	Guide ring	Plastic material
15	Ball	Steel alloy
16	Stopper seal	NBR
17	Mechanical stopper	Steel alloy
18	Magnet	Magnetic metal

Standard materials

Type: **ARP**

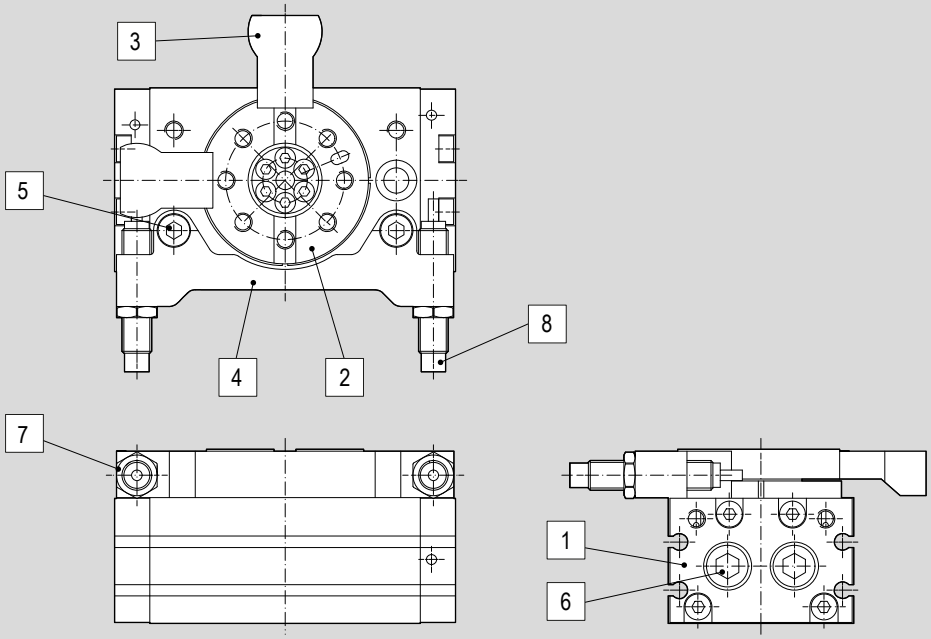

Position	Description	Materials
1	Heads	Anodised aluminium
2	Rotary plate	Anodised aluminium
3	Spacer	Steel
4	Base	Anodised aluminium
5	Hexagonal nut	Anodised aluminium
6	Head nut	Steel
7	Hexagonal nut	Steel
8	Shock absorber	See page 1.105.4

Accessories

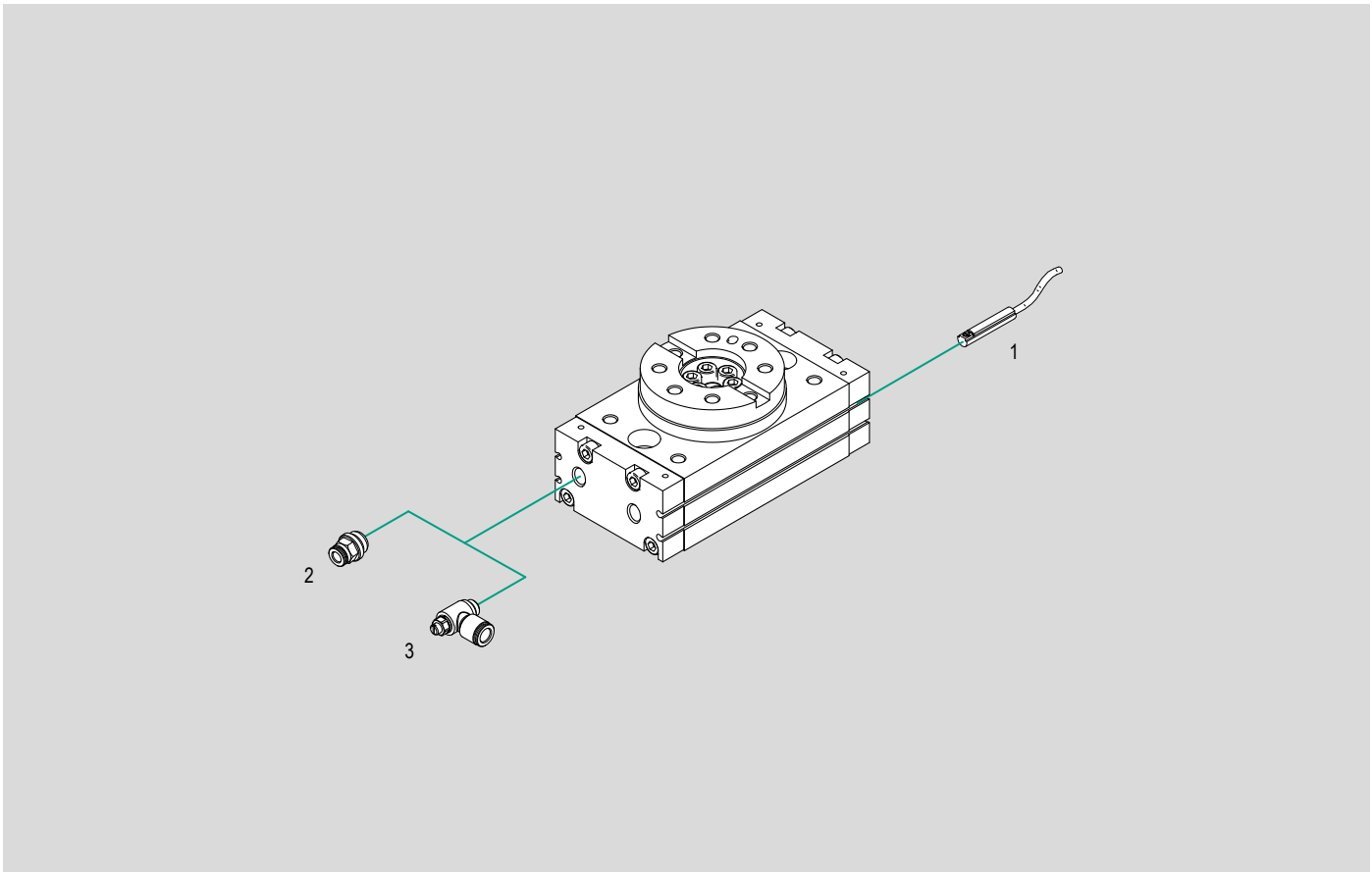

N.	Cylinder bore	Item	Description	Compliance	Matching		Code page	Data sheet page
					ARC	ARP		
1	Ø 10 ÷ 63	ASC..	Magnetic reed switch C groove	-	●	●	1.52.90	1.110.30
2	Ø 10 ÷ 63	R..	Push-in fittings	-	●	●	4.2.1	
3	Ø 10 ÷ 63	V..C	Flow controls, for cylinders	-	●	●	4.94.1	

Key

● allowed matching; - not allowed matching

Main features

10 ÷ 63

Bores Ø



Double acting
Magnetic

ARC

Type



Technical data

Bore Ø mm	10	12	15	18	20	25	28	32	40	50	63
Code	075581	075582	073063	073064	073065	073066	075583	075584	075585	075586	075587
Fluid	Filtered compressed air with or without lubrication. Lubrication, if started, must be continued.										
Pressure range	1,5 ÷ 7 bar										
Temperature range	0°C ÷ +50°C										
Angle of rotation	180°										
Adjustable angle	0° ÷ 190°										
Rotary momentum (Nm) at 6 bar	0,3	0,6	1,5	2,2	3,2	5,5	7,5	9,8	19	31	45
Maximum Absorbing Capacity* (Nm)	-		3	6		20	59		147		
Ports	M3	M5			1/8"						
Weight (g)	150	250	530	990	1.290	2.100	2.890	4.100	7.650	8.960	11.170

*Of shock absorber

Direction and rotation angle

Type: **ARC**

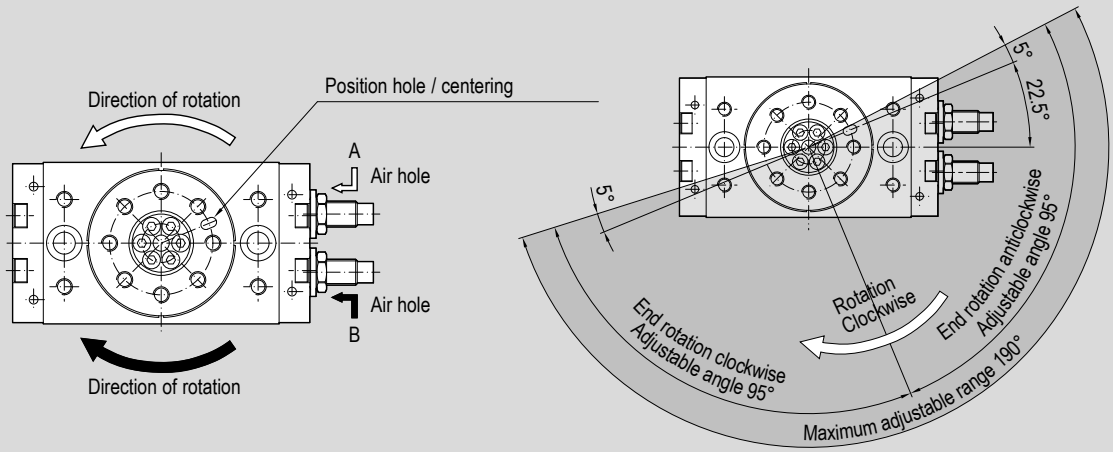

Rotation angles

Type: **ARC**

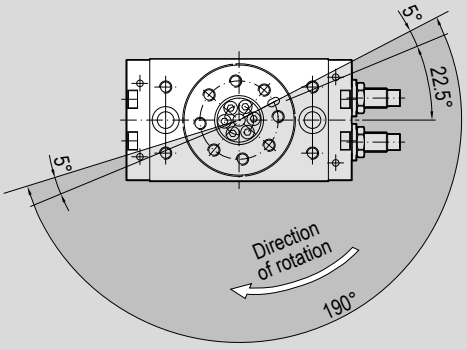

Rotation 190° (Max.)

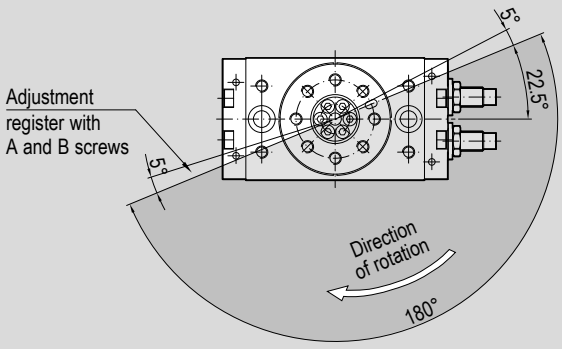

Rotation 180°

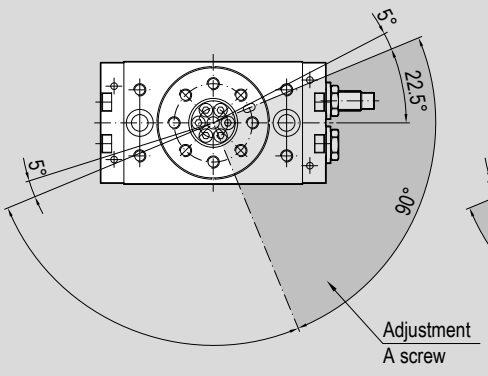

Rotation 90°

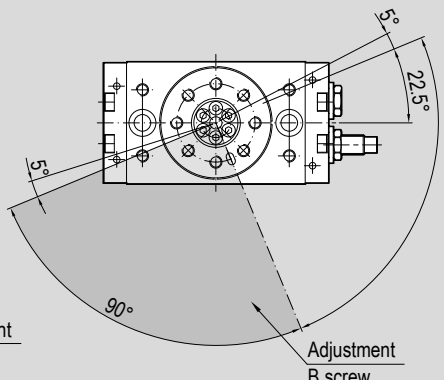

Rotation 90°

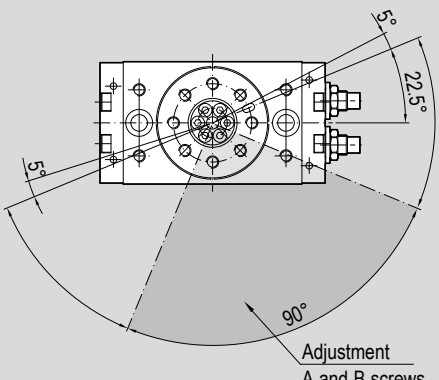

Rotation 90°

Output torque table

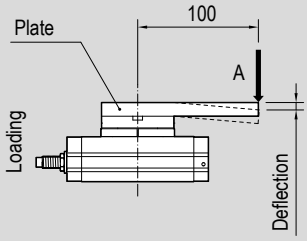

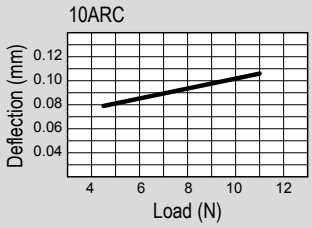

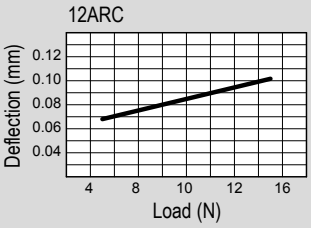

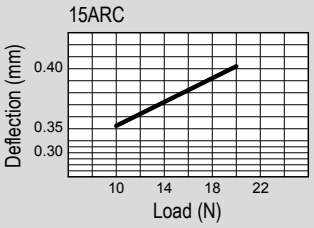

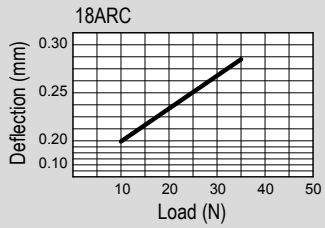

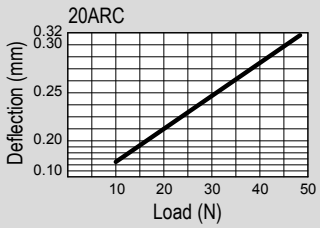

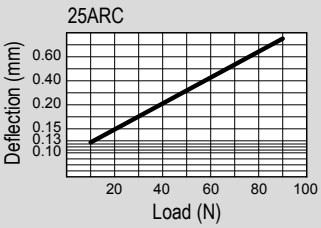



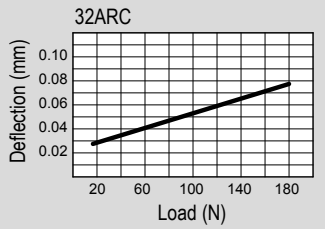

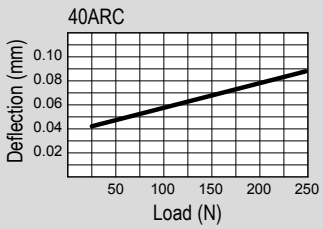

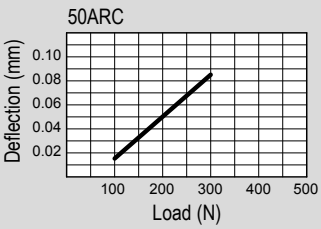

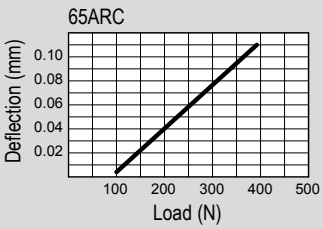

Possible loads

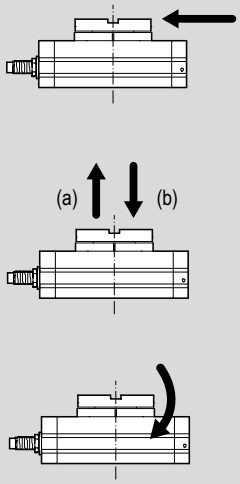

Type of loads		Actuator bore Ø										
		10	12	15	18	20	25	28	32	40	50	63
Side (N)		33	54	70	140	185	300	333	390	543	850	1200
Top (N)	(a)	48	71	78	130	188	285	296	493	740	950	1400
	(b)	48	71	74	130	358	442	476	706	1009	1500	2100
Torque momentum (Nm)		1,1	1,5	2	3,5	4,8	9	12	18	25	30	38

Standard dimensions

Type: **ARC**
Ø 10

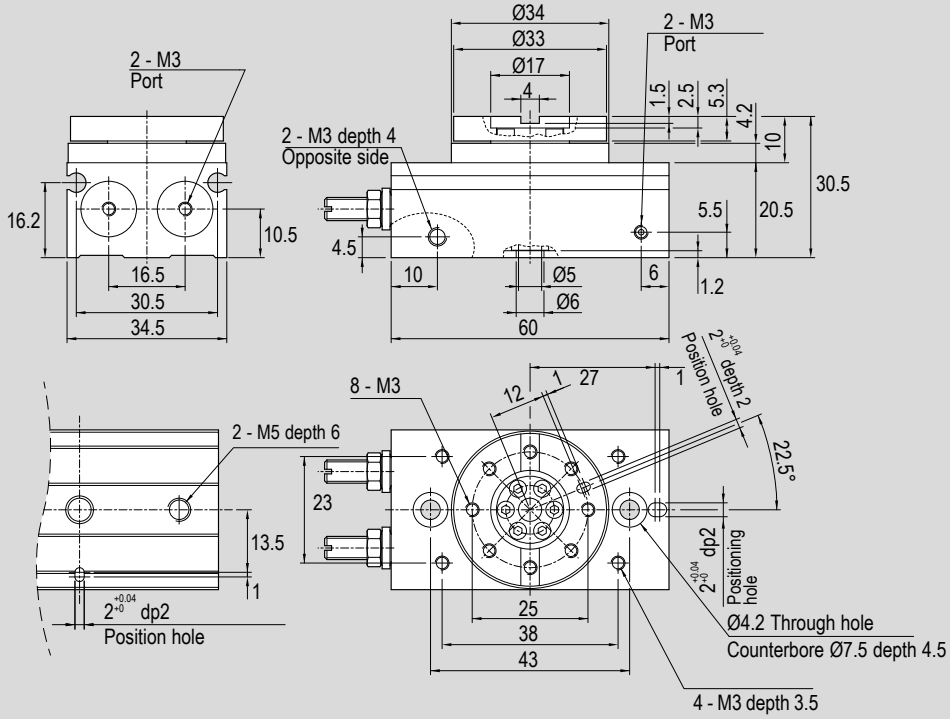

Type: **ARC**
Ø 12

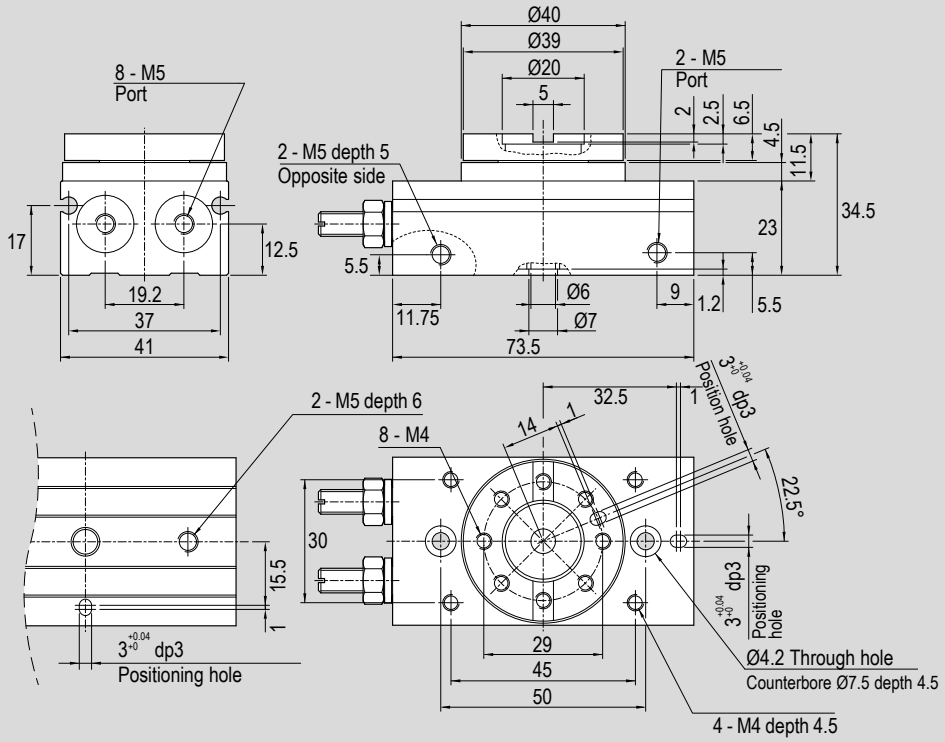

Standard dimensions

Type: **ARC**
Ø 15

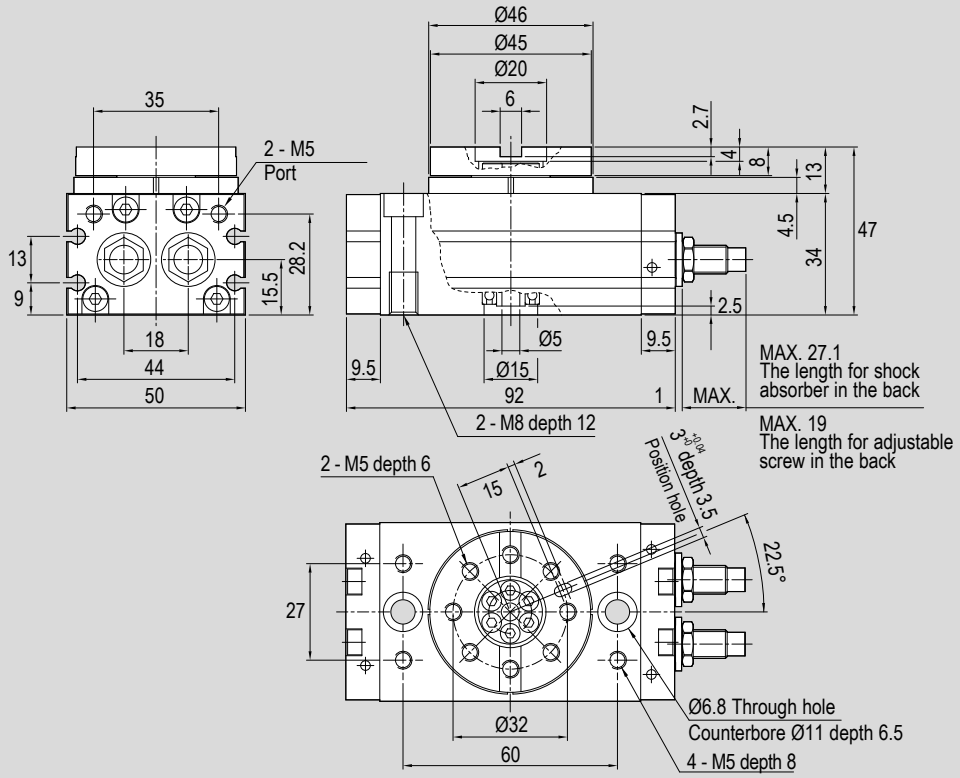

Type: **ARC**
Ø 18

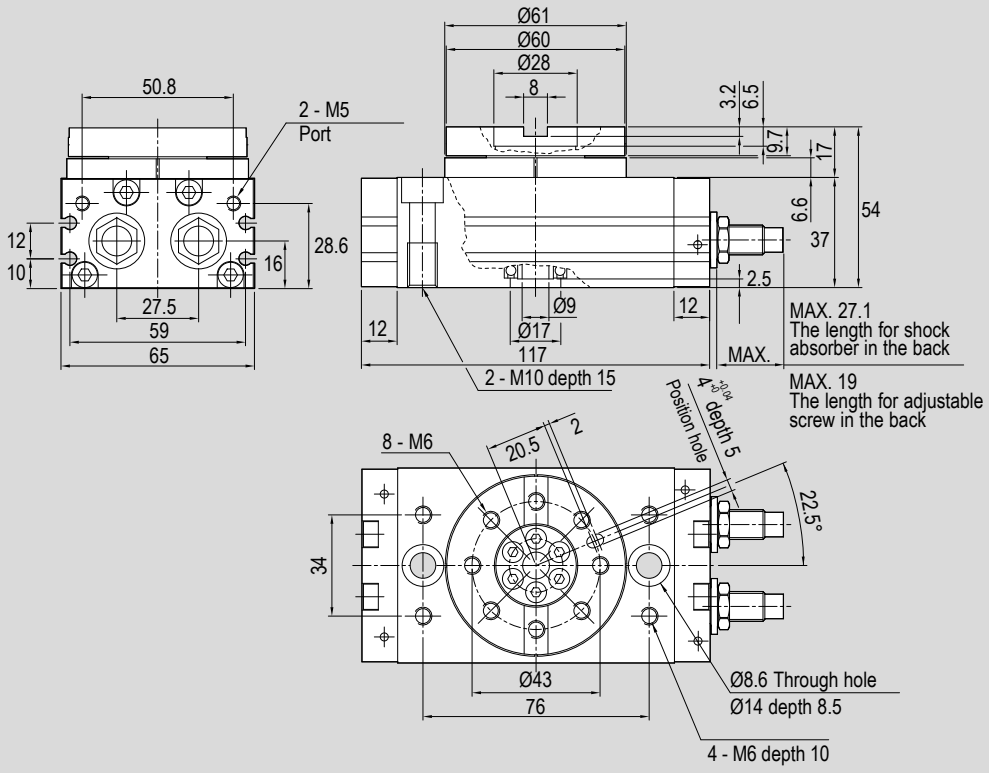

Standard dimensions

Type: **ARC**
Ø 20

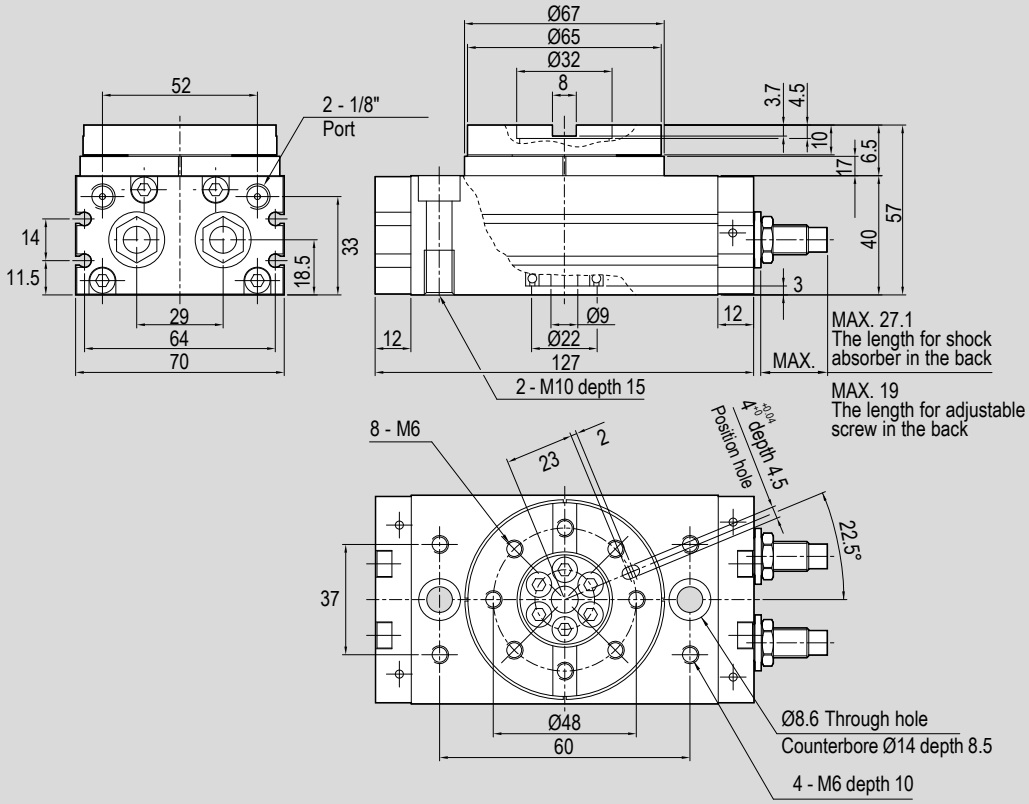

Type: **ARC**
Ø 25

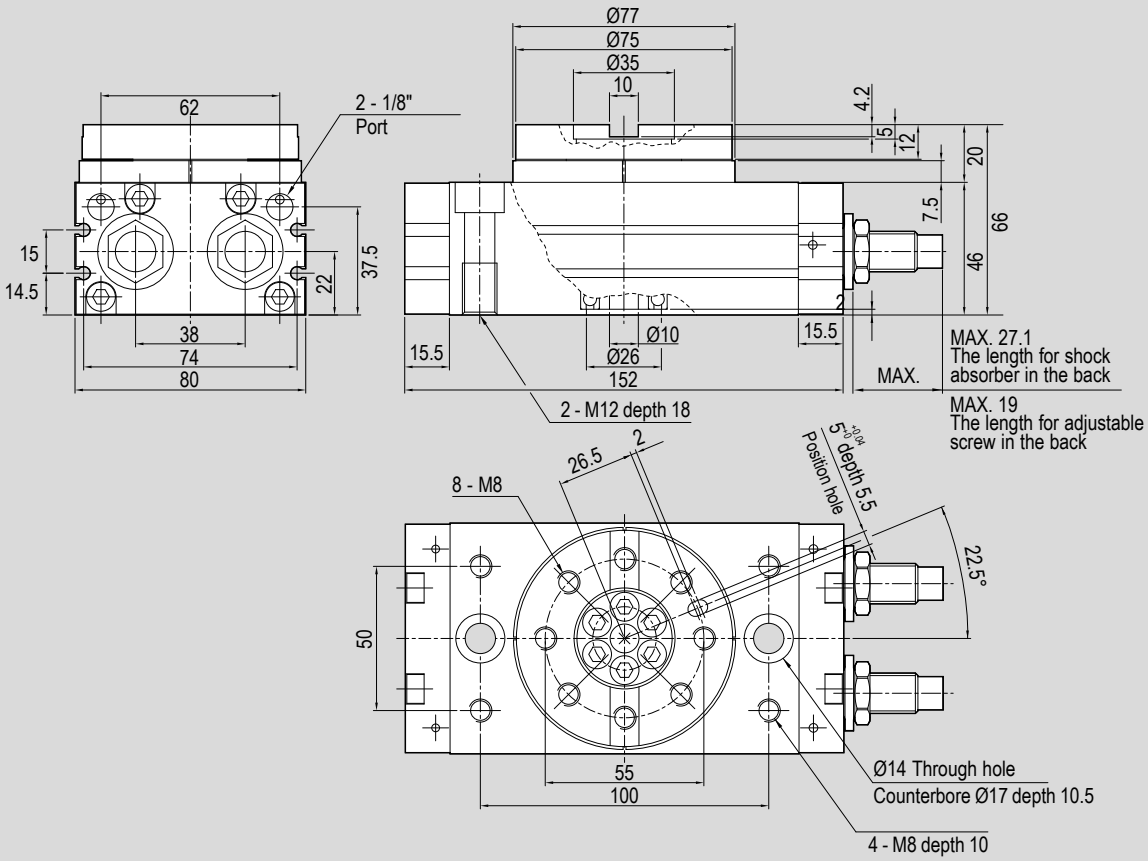

Standard dimensions

Type: **ARC**
Ø 28

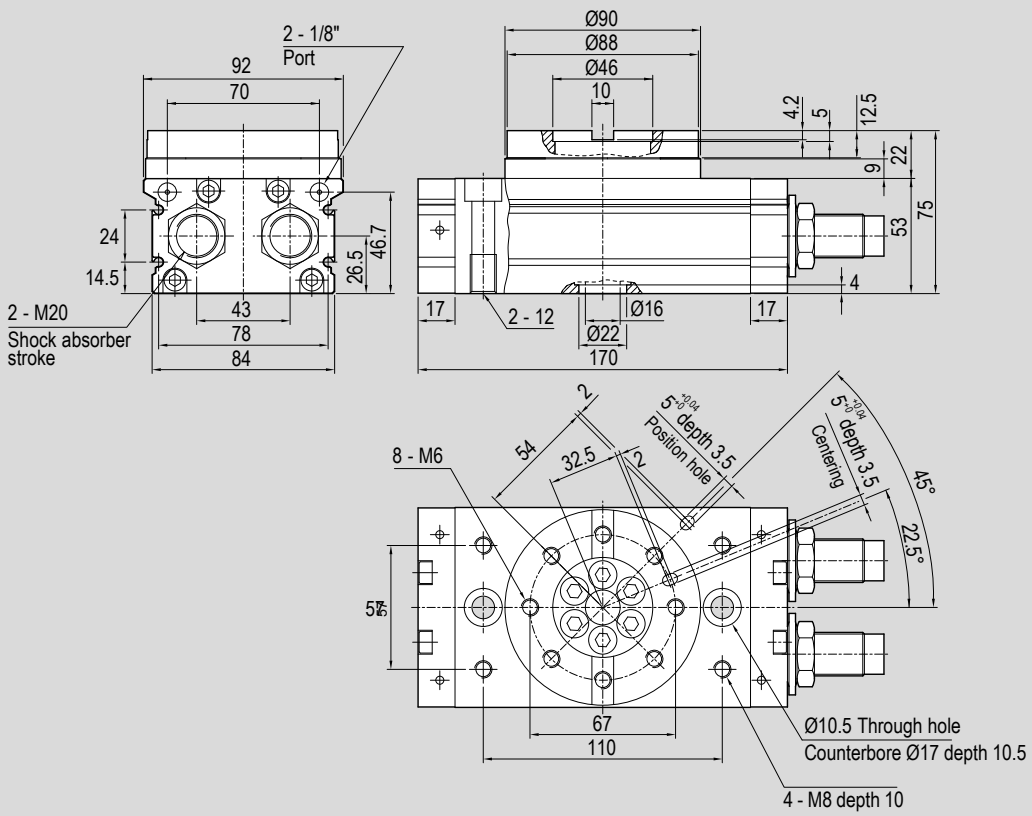

Type: **ARC**
Ø 32

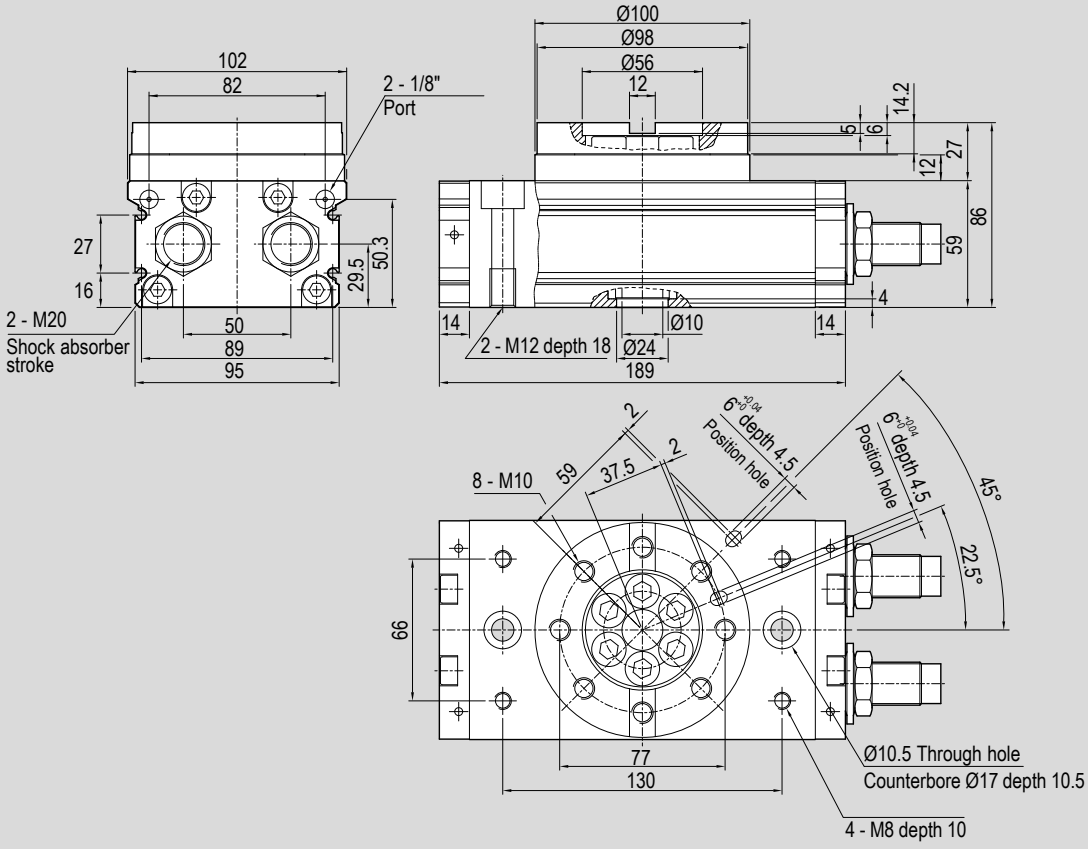

Standard dimensions

Type: **ARC**
Ø 40

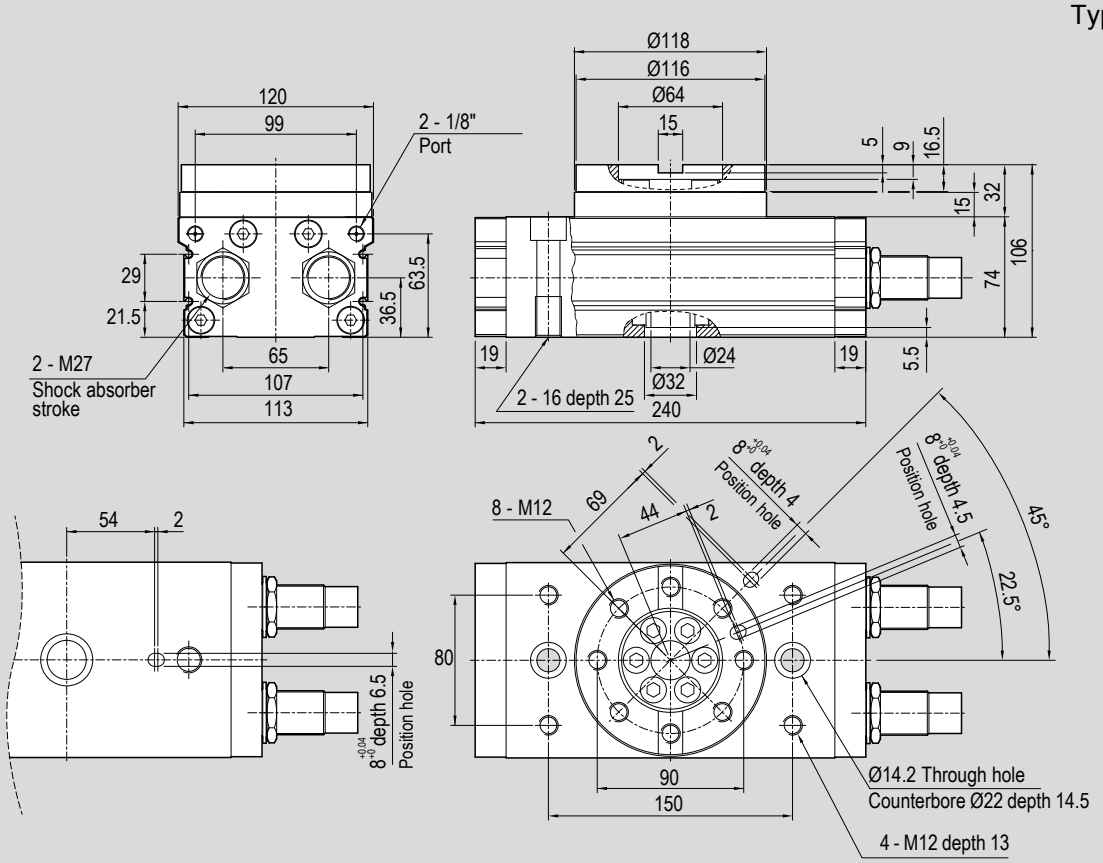

Type: **ARC**
Ø 50

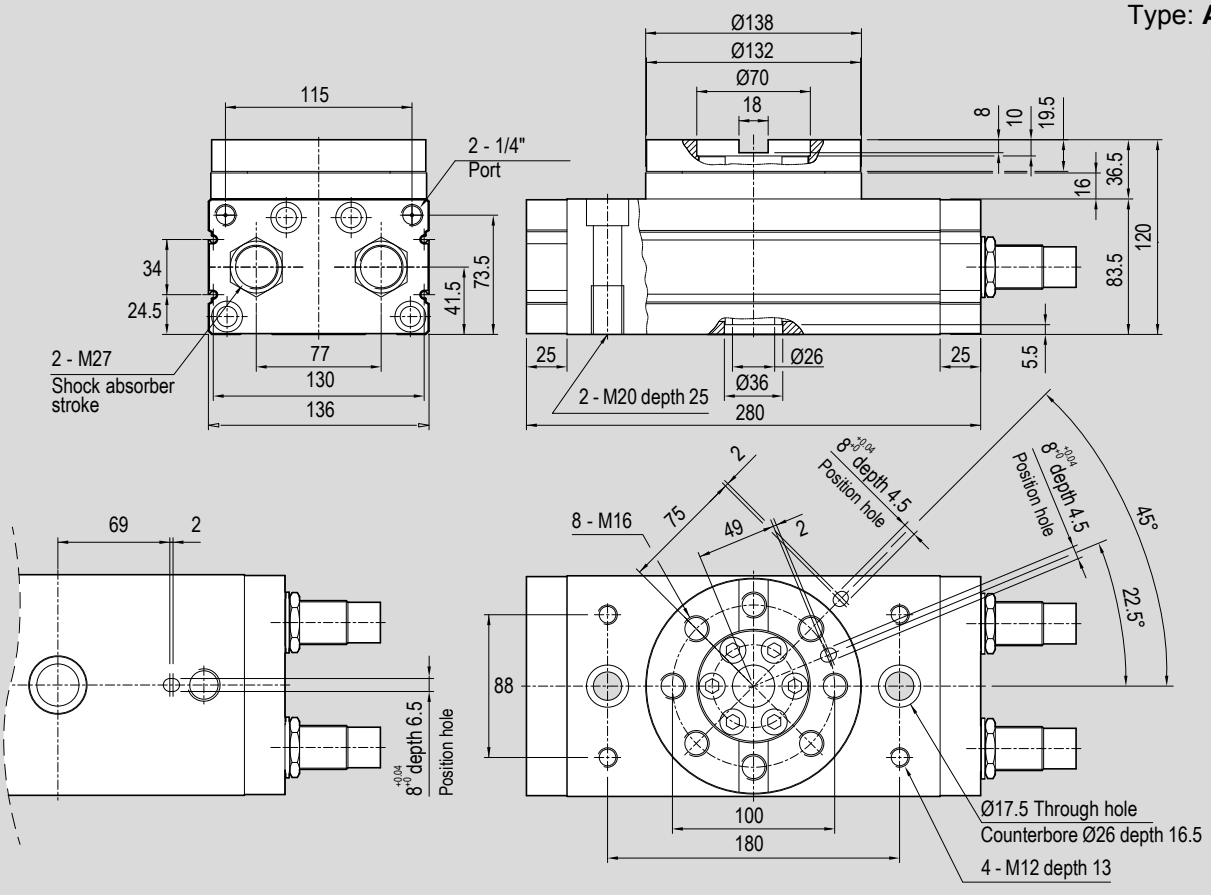

Standard dimensions

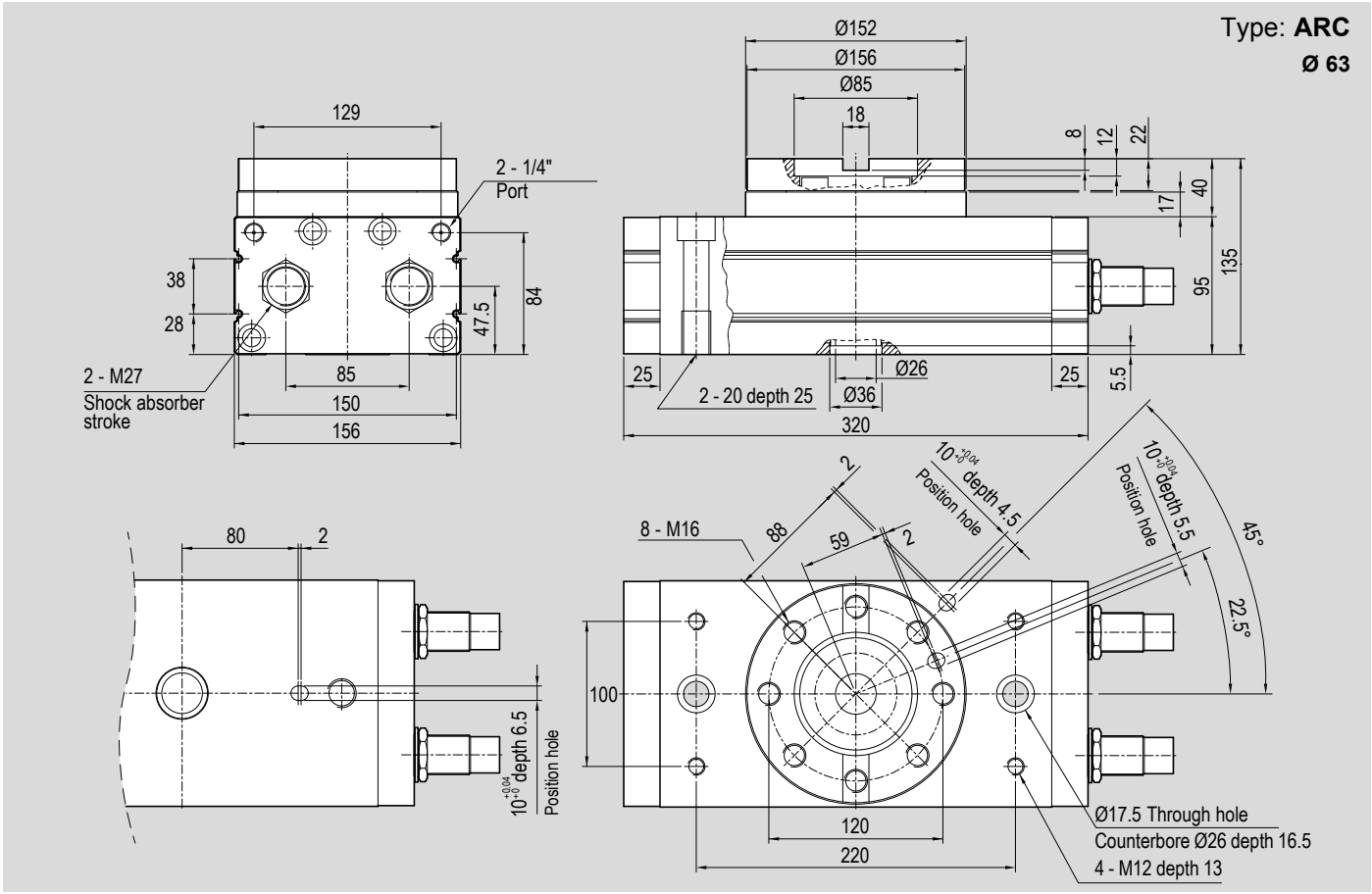

Main features

15 ÷ 32

Bores Ø



Double acting
Magnetic

ARP

Type



Technical data

Bore Ø mm	15		18		20		25		28		32	
Code	073071	073079	073072	073080	073073	073081	073074	073082	075588	075590	075589	075591
Fluid	Filtered compressed air with or without lubrication. Lubrication, if started, must be continued.											
Pressure range	1,5 ÷ 7 bar											
Temperature range	0°C ÷ +50°C											
Angle of rotation	90°	180°	90°	180°	90°	180°	90°	180°	90°	180°	90°	180°
Adjustable angle	10°											
Rotary momentum (Nm) at 6 bar	1,5		2,2		3,2		5,5		7,5		9,8	
Maximum Absorbing Capacity* (Nm)	3		6				20				59	
Ports	M5				1/8"							
Weight (g)	630	600	1200	1140	1520	1450	2480	2370	3390	3210	4700	4500

*Of hydraulic shock absorber

Direction and rotation angle

Type: **ARP**

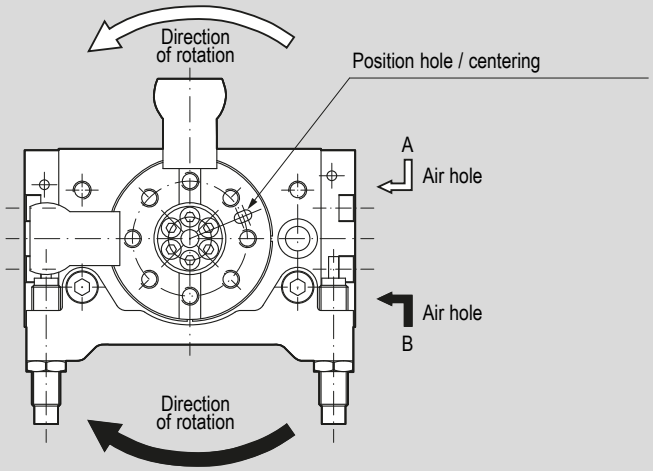

Rotation angles

Type: **ARP**

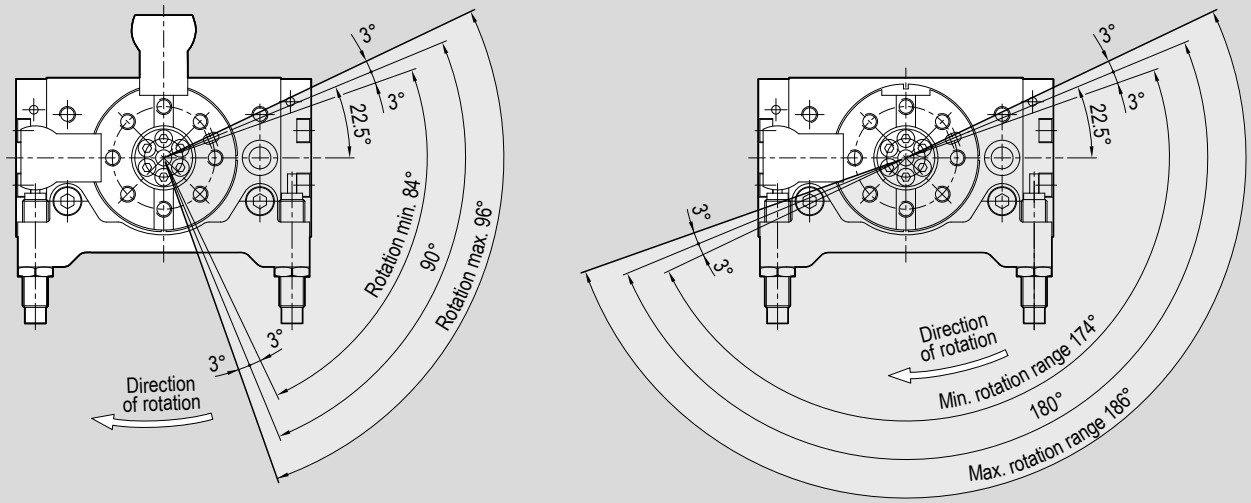

Standard dimensions

Type: **ARP**

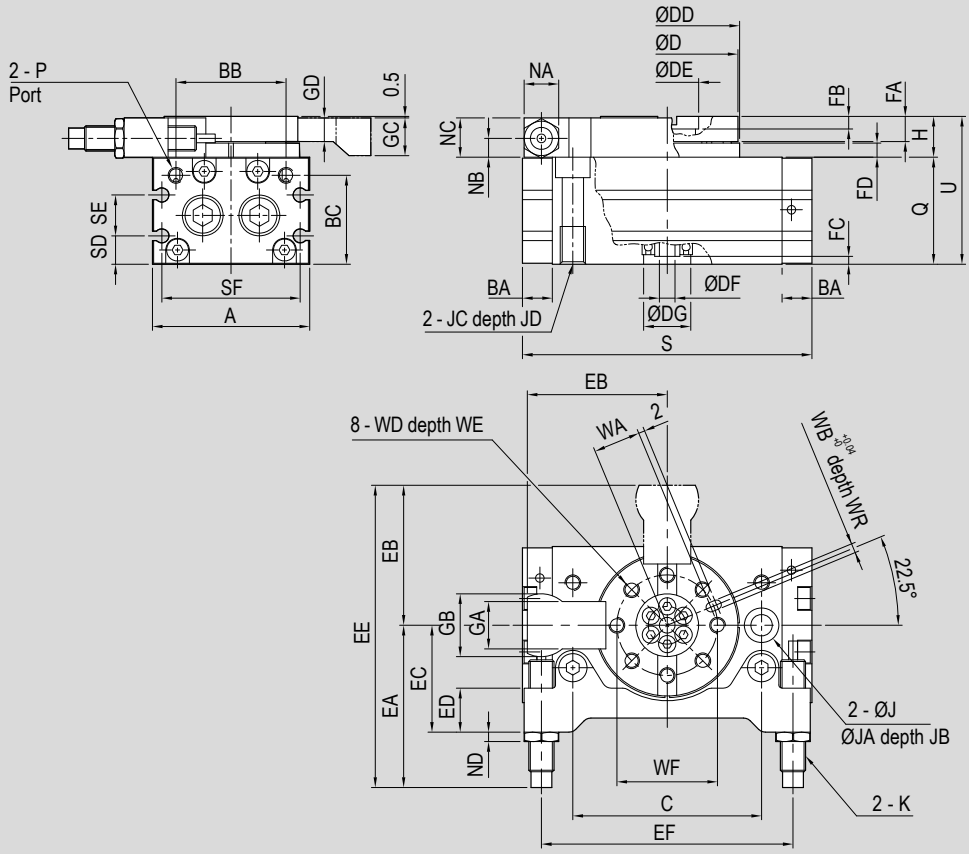

Ø (mm)	A	BA	BB	BC	C	D	DD	DE	DF	DG	EA	EB	EC	ED	EE	EF	FA	FB	FC	FD	GA	GB	GC	GD	H
15	50	9,5	35	28,2	60	45	46	20	5	15	51,6	44,5	34	14	96,1	80	8	4	2,5	4,5	15	20	12	7,5	13
18	65	12	50,8	28,6	76	60	61	28	9	17	56	57	43	18	113	101	9,7	6,5	2,5	6,6	19	25	15	9,2	17
20	70	12	52	33	84	65	67	32	9	22	59	62	46	18	121	110	10	4,5	3	6,5	20	28	16	9,5	17
25	80	15,5	62	37,5	100	75	77	35	10	26	85	73	55	20	158	131	12	5	2	7,5	25	35	18	11,5	20
28	92	17	70	46,7	110	88	90	46	16	22	86	81	55,5	35	167	141	12,5	5	4	9	28	38	19,5	11,5	22
32	102	14	82	50,3	130	98	100	56	19	24	94	92,5	60	35	186,5	163	14,5	6	4	12	33	42	24,5	13,5	27

Ø (mm)	J	JA	JB	JC	JD	K	NA	NB	NC	ND	P	Q	S	SD	SE	SF	U	WA	WB	WR	WD	WE	WF
15	6,8	11	6,5	M8x1,25	12	M8x1	11	6	12,5	3	M5x0,8	34	92	9	13	44	47	15	3	3,5	M5x0,8	8	32
18	8,6	14	8,5	M10x1,5	15	M10x1	12,7	7,5	16,5	3	M5x0,8	37	117	10	12	59	54	20,5	4	5	M6x1	10	43
20	8,6	14	8,5	M10x1,5	15	M10x1	12,7	8,5	16,5	3	RC 1/8	40	127	11,5	14	64	57	23	4	4,5	M6x1	10	48
25	10,5	17	10,5	M12x1,75	18	M14x1,5	19	8,5	19,5	5	RC 1/8	46	152	14,5	15	74	66	26,5	5	5,5	M8x1,25	12	55
28	10,5	17	10,5	M12x1,75	18	M14x1,5	19	10	21,5	5	RC 1/8	53	170	14,5	24	78	75	32,5	5	5,5	M8x1,25	12,5	67
32	10,5	17	10,5	M12x1,75	18	M20x1,5	26	11,5	26	7	RC 1/8	59	189	16	27	89	86	37,5	6	6,5	M10x1,5	14,5	77

Magnetic reed switch C groove ASC..

	For cylinder Ø mm	Code	Item	Cylinder matching
	10 ÷ 63	070248	ASC1C525	ARC ARP
		070249	ASC7N2M8	
		070382	ASC7M2M8	

Notes

CARTRIDGE
Cylinders

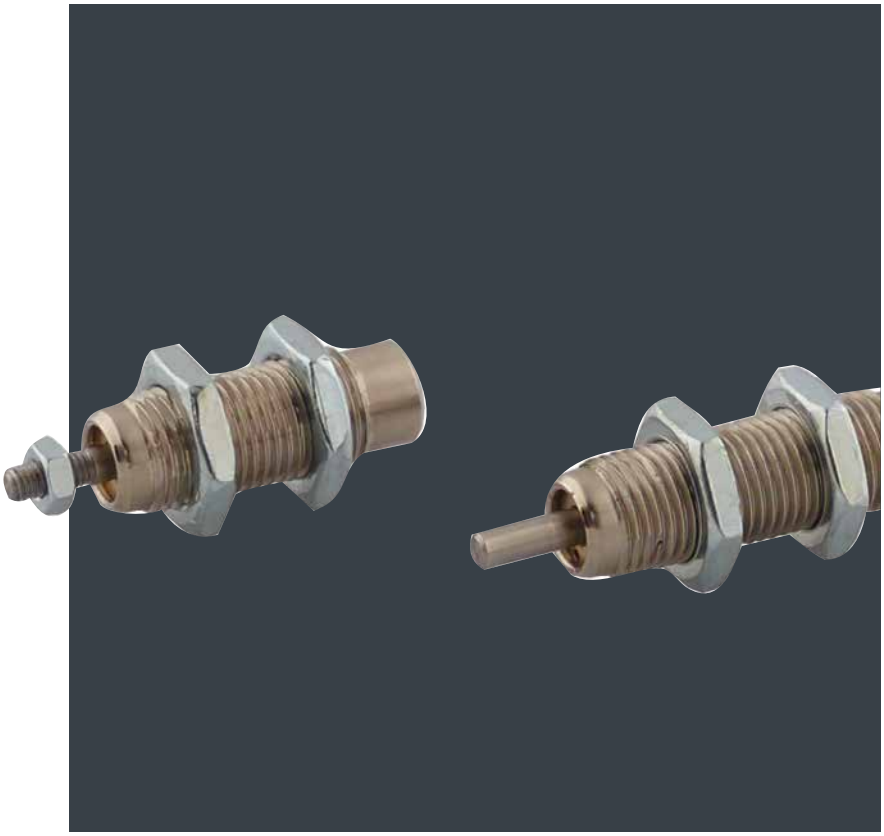

Find out our
key products

- **Solution for most applications**
- **Easy and intuitive choice**
- **Excellent value for money**
- **Wide availability**
- **Fast delivery**

Features and certifications

Series of cartridge cylinders, available in bores from Ø 6 to 16, single acting, with threaded body allowing a further adjustment of the end stroke position.
Seal kit not available.
Supplied as standard in compliance with Reach and RoHS directives.

Type MCF Ø 6 ÷ 16

from page 1.55.20



Cartridge cylinders available in bores from Ø 6 to 16, single acting, with threaded body (allowing a further adjustment of the end stroke position) and threaded rod.

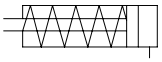

Type MCN Ø 6 ÷ 16

from page 1.55.20



Cartridge cylinders available in bores from Ø 6 to 16, single acting, with threaded body (allowing a further adjustment of the end stroke position) and non-threaded rod.

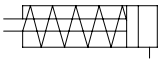

Options

Description	Symbol	Suffix
Special versions on request		**/S**

Code key

Bore	/	Stroke	Type	/	Special version
10	**/**	**15**	**MCF**	**/**	

- **10** (Bore): Ø 6, 10, 16
- **15** (Stroke): 5, 10, 15 mm
- **MCF** (Type):
  - MCF — Single acting, With threaded rod
  - MCN — Single acting, With non-threaded rod
- (Special version): S

How to order

Bore		Stroke	Type	Options
10	**/**	**15**	**MCF**	

Notes

For further information on options and their matching, see tables above.

Standard materials

Type: **MCF, MCN**

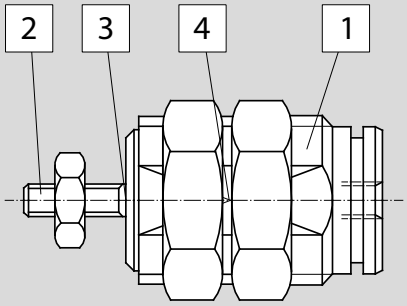

Position	Description	Materials
1	Body	Nickel-plated brass
2	Rod	Stainless Steel AISI 303
3	Seals	Polyurethane (PU)
4	Spring	Stainless Steel AISI 302

Main features

6 ÷ 16
Bores Ø

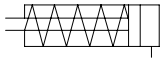
Single acting
With threaded rod

MCF
Type



6 ÷ 16
Bores Ø

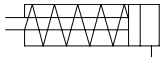
Single acting
With non-threaded rod

MCN
Type



Technical data

Bore Ø mm		6	10	16
Fluid		Filtered compressed air with or without lubrication. Lubrication, if started, must be continued.		
Pressure range		2 ÷ 7 bar		
Temperature range		-20°C ÷ +80°C		
Strokes		5 ÷ 15 mm		
Port		M5		
Thrust force (Nm) at 6 bar		14	42	109
Maximum side load (N)		0,10	0,15	0,20
Traction force (N)	Stroke 5	1,4	3,9	9,9
	Stroke 10	2	3,4	8,7
	Stroke 15	1,5	2,9	7,4

Standard strokes

	MCF Bore Ø mm		
Stroke mm	6	10	16
5			
10			
15			

	MCN Bore Ø mm		
Stroke mm	6	10	16
5			
10			
15			

Key
Standard stroke

Standard dimensions

Type: **MCF**

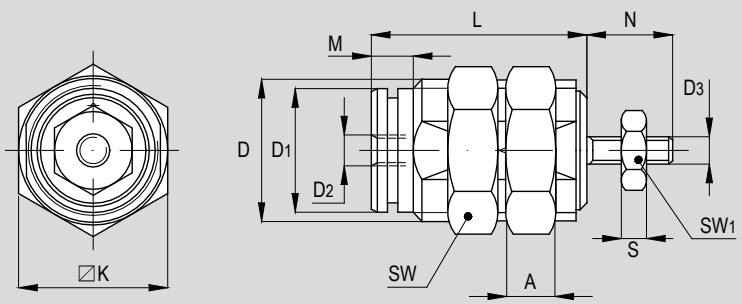

Type: **MCN**

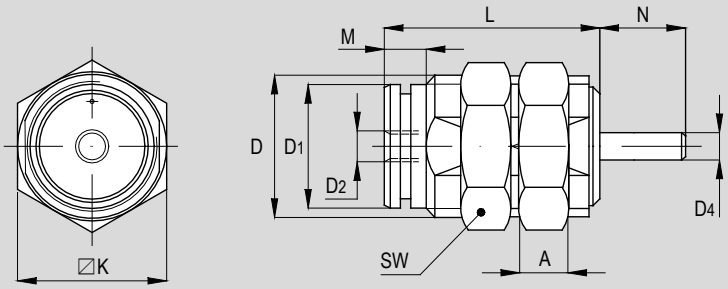

Ø (mm)	D	D1	D2	D3	D4	⍁K	M	L			N	A	S	SW	SW1
								Stroke 5	Stroke 10	Stroke 15					
6	M10x1	8,5	M5	M3	3	9	5	19,5	26,5	33,5	8	3	2,4	14	5,5
10	M15x1,5	12	M5	M4	4	19	7	23	29,5	36,5	10,5	4	2	19	7
16	M22x1,5	19	M5	M5	5	20	6	27	32	37	13	5	4	27	8

HAND
Grips



Find out our
key products

- **Solution for most applications**
- **Easy and intuitive choice**
- **Excellent value for money**
- **Wide availability**
- **Fast delivery**

Features and certifications

Series of pneumatic hand grips available in bores from Ø 6 to 100, double acting, magnetic. Different type and configurations available.
Supplied as standard in compliance with Reach and RoHS directives.

Type PAB Ø 10 ÷ 32

from page 1.60.20



Angular hand grips available in bores from Ø 10 to 32, double acting (on request also single acting), magnetic, with grooves allowing the mounting of magnetic reed switches directly.

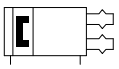

Type PAC Ø 12 ÷ 32

from page 1.60.30



180° angular hand grips available in bores from Ø 12 to 32, double acting, magnetic, with grooves allowing the mounting of magnetic reed switches directly.

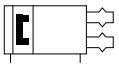

Type PPB Ø 10 ÷ 32

from page 1.60.40



Parallel hand grips available in bores from Ø 10 to 32, double acting, magnetic, with grooves allowing the mounting of magnetic reed switches directly.

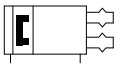

Type PPC Ø 6 ÷ 40

from page 1.60.50



Guided parallel hand grips available in bores from Ø 6 to 40, double acting (on request also single acting), magnetic, with grooves allowing the mounting of magnetic reed switches directly.

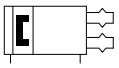

Type PPD Ø 10 ÷ 40

from page 1.60.60



Parallel hand grips with long stroke available in bores from Ø 10 to 40, double acting, magnetic, with grooves allowing the mounting of magnetic reed switches directly.

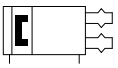

Type PPE Ø 16 ÷ 100

from page 1.60.70



Hand grips with 3 fingers available in bores from Ø 16 to 100, double acting, magnetic, with grooves allowing the mounting of magnetic reed switches directly.

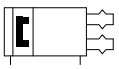

Options

Description	Symbol	Suffix
Single acting version normally open (only for type PAB and PPC)		**/SE**
Side lever mounting (only for type PPD)		**B**
Special versions on request		**/S**

For code key see the table below.

Code key

Bore	Type	/	Options
20	**PAB**	**/**	**SE**

Bore	Type	Options
PAB Ø 10, 16, 20, 25, 32	PAB Double acting Magnetic Angular	SE*
PAC Ø 12, 16, 20, 25, 32	PAC Double acting Magnetic Angular 180°	S
PPB Ø 10, 16, 20, 25, 32	PPB Double acting Magnetic Parallel	
PPC Ø 6, 10, 16, 20, 25, 32, 40	PPC Double acting Magnetic Guided parallel	
PPE Ø 16, 20, 25, 32, 40, 50, 63, 80, 100	PPE Double acting Magnetic 3 fingers	

*Only PAB - PAC type

Bore	/	Stroke	Type	Options
20	**/**	**50**	**PPD**	**B**

Bore	Stroke	Type	Options
Ø 10, 16, 20, 25, 32, 40	20 ÷ 160 mm	PPD Double acting Magnetic Parallel long stroke	B
			/S

How to order

Bore	Type		Options
20	**PAB**	**/**	**SE**

How to order

Bore		Stroke	Type	Options
20	**/**	**50**	**PPD**	**B**

Notes

For further information on options see table above.

Standard materials

Type: **PAB**

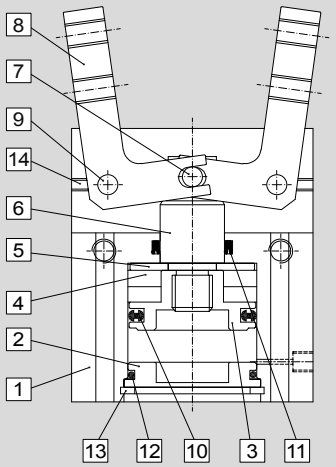

Position	Description	Materials
1	Body	Aluminium
2	End cover	Brass
3	Piston	Brass
4	Magnet	Plastic magnet
5	Spacer	Brass
6	Piston rod	Stainless Steel
7	Piston rod pin	Steel
8	Fingers	Steel alloy
9	Slide pin	Steel
10	Piston seal	NBR
11	Rod seal	NBR
12	End cover seal	NBR
13	Seeger	Steel
14	Hexagonal screw	Steel alloy

Type: **PAC**

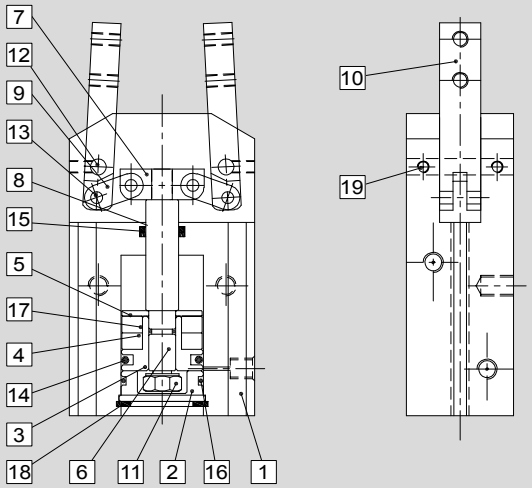

Position	Description	Materials
1	Body	Aluminium
2	End cover	Aluminium
3	Piston	Brass
4	Magnet	Plastic magnet
5	Spacer	Brass
6	Piston rod	Stainless Steel
7	End piston joint	Steel alloy
8	Piston rod pin	Steel
9	Actioning lever	Steel alloy
10	Fingers	Steel alloy
11	Nut	Steel
12	Slide pin	Steel
13	Action lever pin	Steel
14	Piston seal	NBR
15	Piston rod seal	NBR
16	End cover seal	NBR
17	Rod seal	NBR
18	Seeger	Spring steel
19	Hexagonal screw	Steel alloy

Standard materials

Type: **PPB**

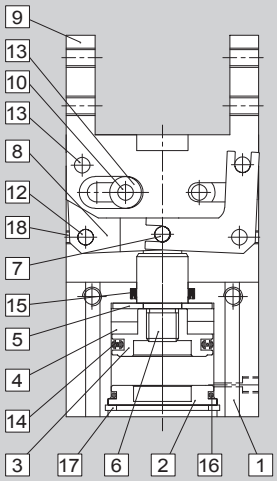

Position	Description	Materials
1	Body	Aluminium
2	End cover	Brass
3	Piston	Brass
4	Magnet	Plastic magnet
5	Spacer	Brass
6	Piston rod	Stainless Steel
7	Piston rod pin	Steel
8	Actioning lever	Steel alloy
9	Fingers	Steel alloy
10	Slide guide pin	Steel
11	Slide pin	Steel
12	Action lever pin	Steel
13	Washer	Steel alloy
14	Piston seal	NBR
15	Piston rod seal	NBR
16	End cover seal	NBR
17	Seeger	Spring steel
18	Hexagonal screw	Steel alloy

Type: **PPC**

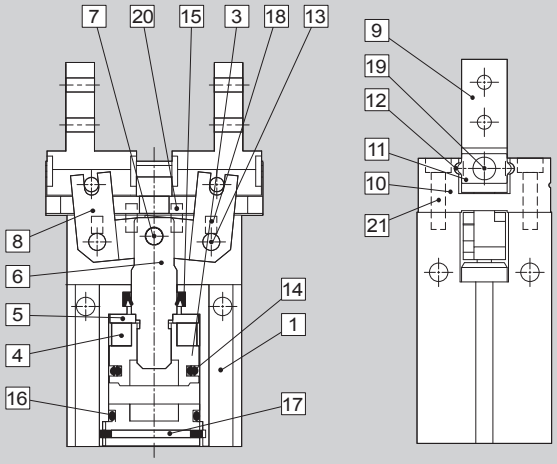

Position	Description	Materials
1	Body	Aluminium alloy
2	End cover	Aluminium alloy
3	Piston	Copper
4	Magnet	Plastic magnet
5	Spacer	Copper
6	Piston rod	Stainless Steel
7	Pin	Steel
8	Actioning lever	Stainless Steel
9	Fingers	Stainless Steel
10	Fingers base	Stainless Steel
11	Ball stopper	Stainless Steel
12	**Ball**	Steel
13	Action lever pin	Steel
14	Piston seal	NBR
15	Rod seal	NBR
16	End cover seal	NBR
17	Snap ring	Steel alloy
18	Screw	Steel alloy
19	Screw	Steel alloy
20	Pin	Steel
21	Mounting screw	Steel alloy

Standard materials

Type: **PPD**

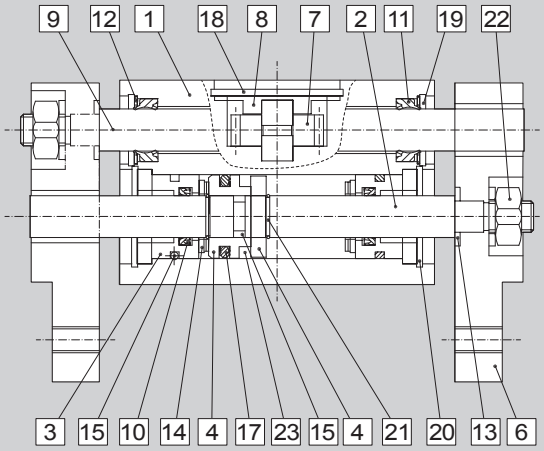

Position	Description	Materials
1	Body	Aluminium
2	Piston rod	Stainless Steel
3	End cover	Aluminium
4	Piston	Brass
5	Magnet holder	Brass
6	Fingers	Aluminium
7	Pinion	Carbon steel
8	Pinion cover	Iron
9	Rod guide	Stainless Steel
10	Piston rod seal	NBR
11	Rod guide seal	NBR
12	Seeger	Iron
13	Cushion spacer	Iron
14	Piston rod dampers	Polyurethane (PU)
15	End cover seal	NBR
16	Piston seal	NBR
17	Piston o-ring	NBR
18	Seeger	Spring steel
19	Seeger	Spring steel
20	Seeger	Spring steel
21	Seeger	Spring steel
22	Nut	Steel
23	Magnet	Plastic magnet

Type: **PPE**

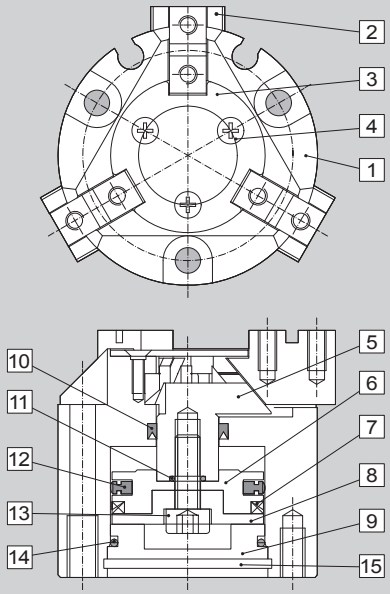

Position	Description	Materials
1	Body	Aluminium alloy
2	Fingers	Steel alloy
3	Spacer	Stainless Steel
4	Spacer screw	Steel alloy
5	Rod	Steel alloy
6	Piston	Aluminium alloy
7	Magnet	Plastic magnet
8	Magnet cover	Aluminium alloy
9	End cover	Aluminium alloy
10	Shaft seal	NBR
11	Shaft o-ring	NBR
12	Piston seal	NBR
13	Screw	Steel alloy
14	End cover o-ring	NBR
15	Seeger	Steel alloy

Accessories

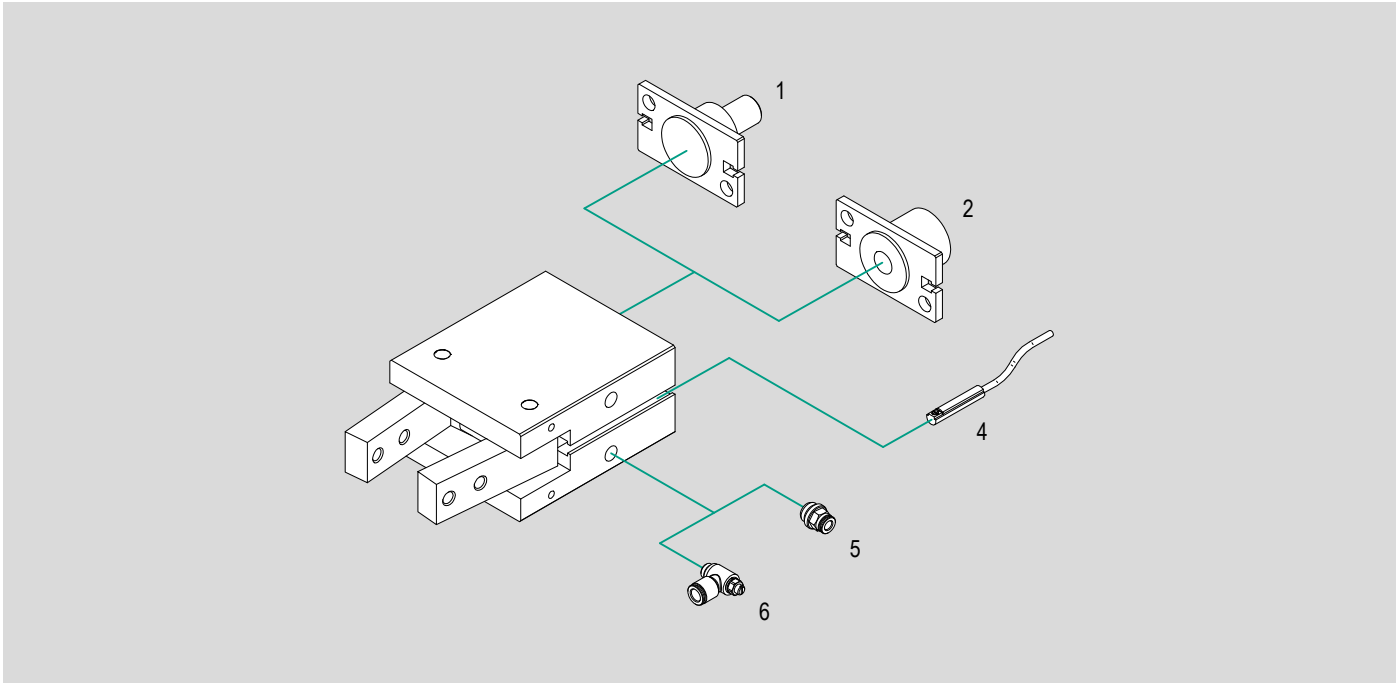

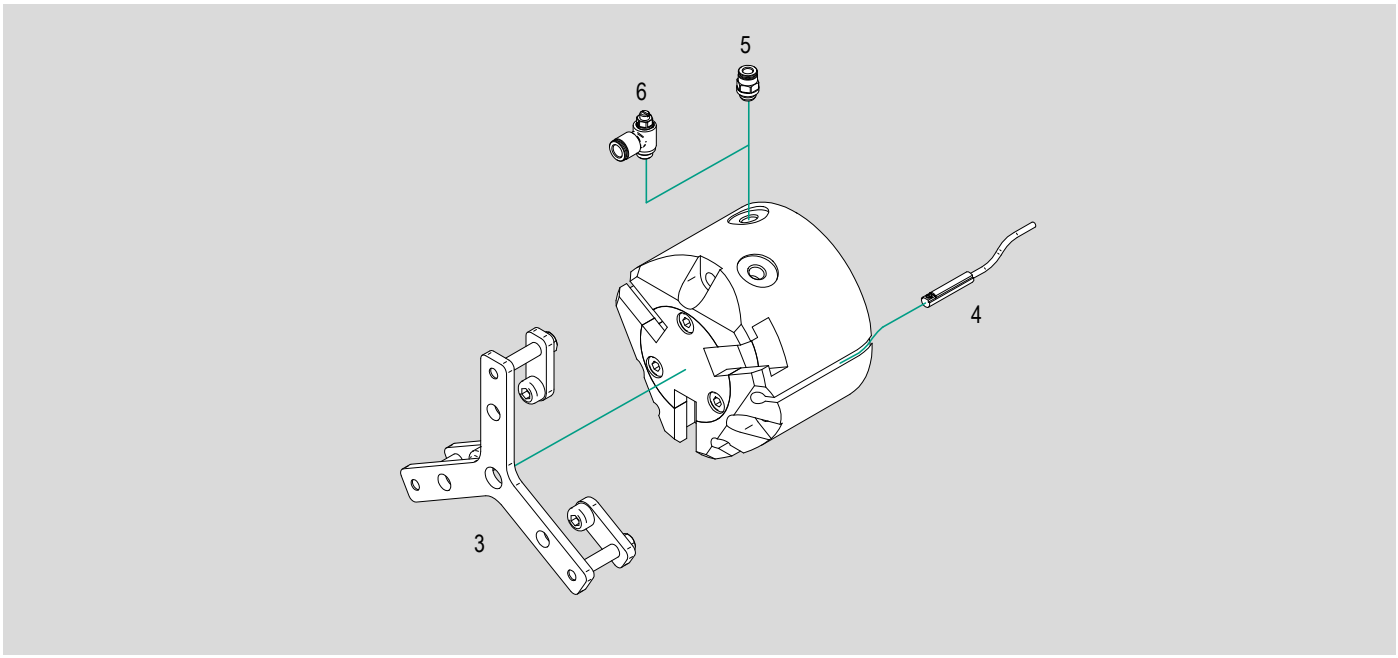

N.	Cylinder bore	Item	Description	Compliance	Matching						Code page	Data sheet page
					PAB	PAC	PPB	PPC	PPD	PPE		
1	Ø 10 ÷ 32	..PM	Male mounting	-	●	●	●	-	-	-	1.60.90	1.100.350
2	Ø 10 ÷ 32	..PF	Female mounting	-	●	●	●	-	-	-		
3	Ø 25 ÷ 100	..PTD	Plate	-	-	-	-	-	-	●		1.100.351
4	Ø 6 ÷ 100	ASC..	Magnetic reed switch C groove	-	●	●	●	●	●	●		1.110.30
5	Ø 6 ÷ 100	R..	Push-in fittings	-	●	●	●	●	●	●	4.2.1	
5	Ø 6 ÷ 100	V..C	Flow controls, for cylinders	-	●	●	●	●	●	●	4.94.1	

Key

● allowed matching; - not allowed matching

Hand grips
Series PAB

Main features

10 ÷ 32
Bores Ø

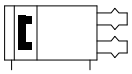
Double acting
Magnetic
Angular

PAB
Type



Technical data

Bore Ø mm		10	16	20	25	32
Fluid		Compressed filtered air				
Lubrication	Piston	With or without lubrication				
	Lever	Lubrication required on sliding parts				
Pressure range		1,5 ÷ 7 bar				
Temperature range		0°C ÷ +60°C				
Lever open/close angle		-10° ÷ +30°				
Maximum operation frequency		80/min.				
Ports		M3	M5			
Maximum length of gripping point **L**		30 mm	40 mm	60 mm	70 mm	85 mm
Theoretical gripping force **M** (Kgf·cm)	Closing	0,16 x **P**	0,80 x **P**	1,70 x **P**	3,40 x **P**	6,10 x **P**
	Opening	0,26 x **P**	1,10 x **P**	2,30 x **P**	4,30 x **P**	8,10 x **P**
Effective gripping force **F** (N)		**F** = **M** / **L** x 0,85				
Weight (g)		100	120	200	330	560

Key
F = effective gripping force; **M** = theoretical gripping force; **L** = maximum length of gripping point; **P** = operating pressure;
See also table at page 1.60.21

Codes

Function	**PAB** Bore Ø mm				
	10	16	20	25	32
Double acting	075023	075004	075006	075008	075010
Single acting	075072	075073	075070	075071	170677

Gripping forces

Type: **PAB**

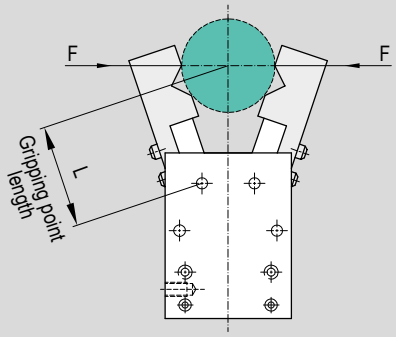

Bore: Ø **10**

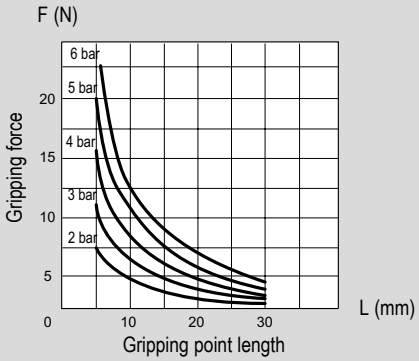

Bore: Ø **16**

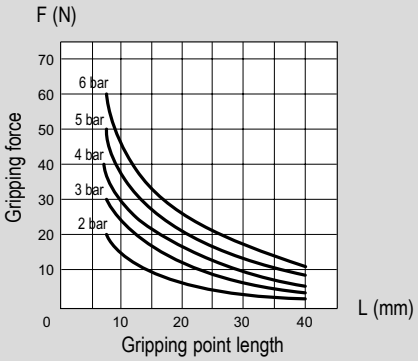

Bore: Ø **20**

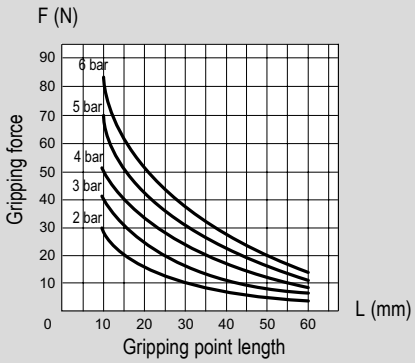

Bore: Ø **25**

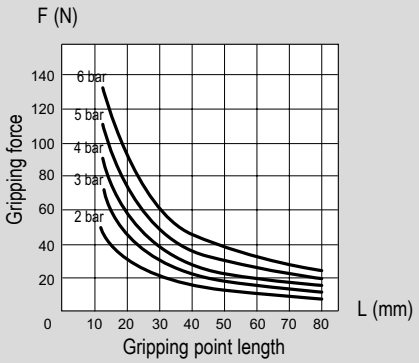

Bore: Ø **32**

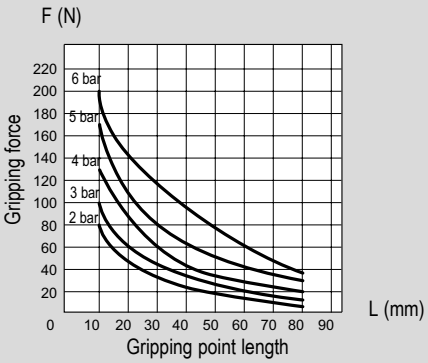

Standard dimensions

Type: **PAB**
Ø 10

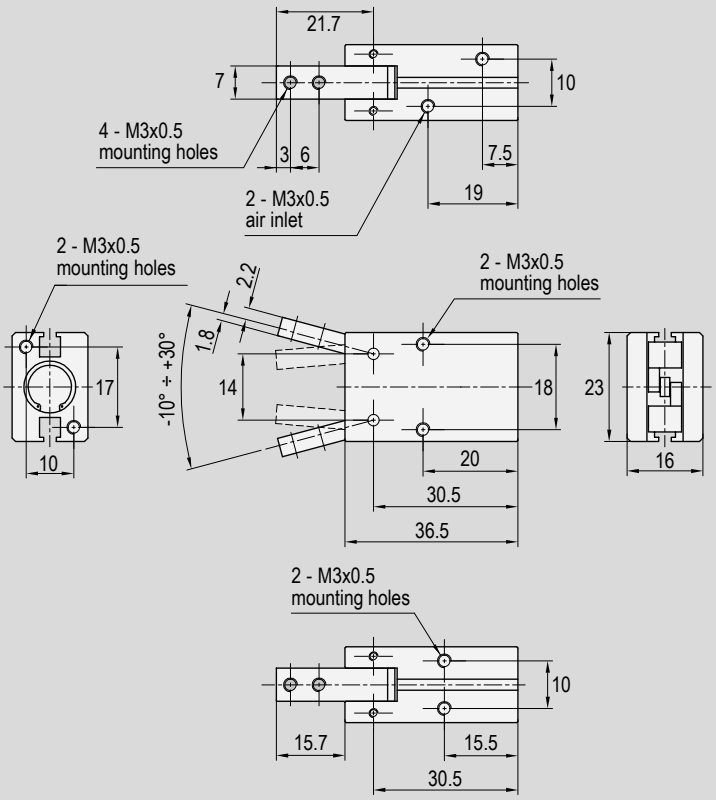

Type: **PAB**
Ø 16

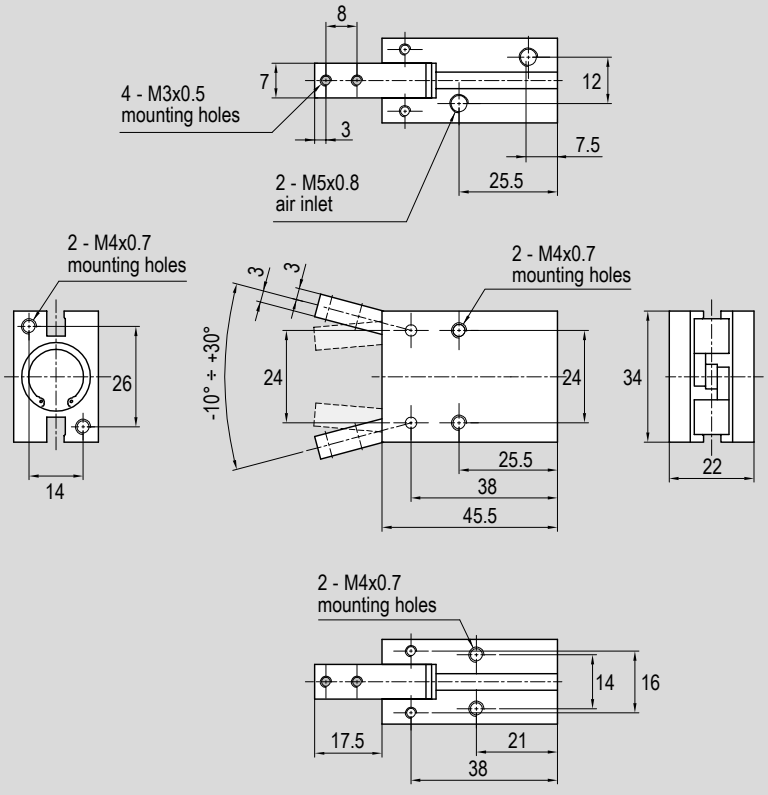

Standard dimensions

Type: **PAB**
Ø 20

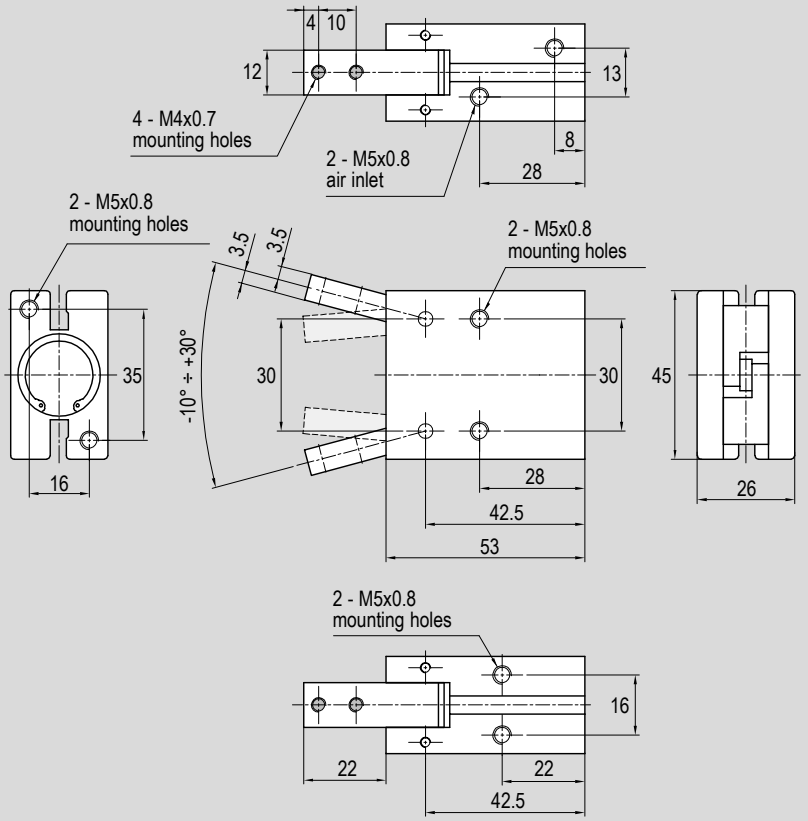

Type: **PAB**
Ø 25

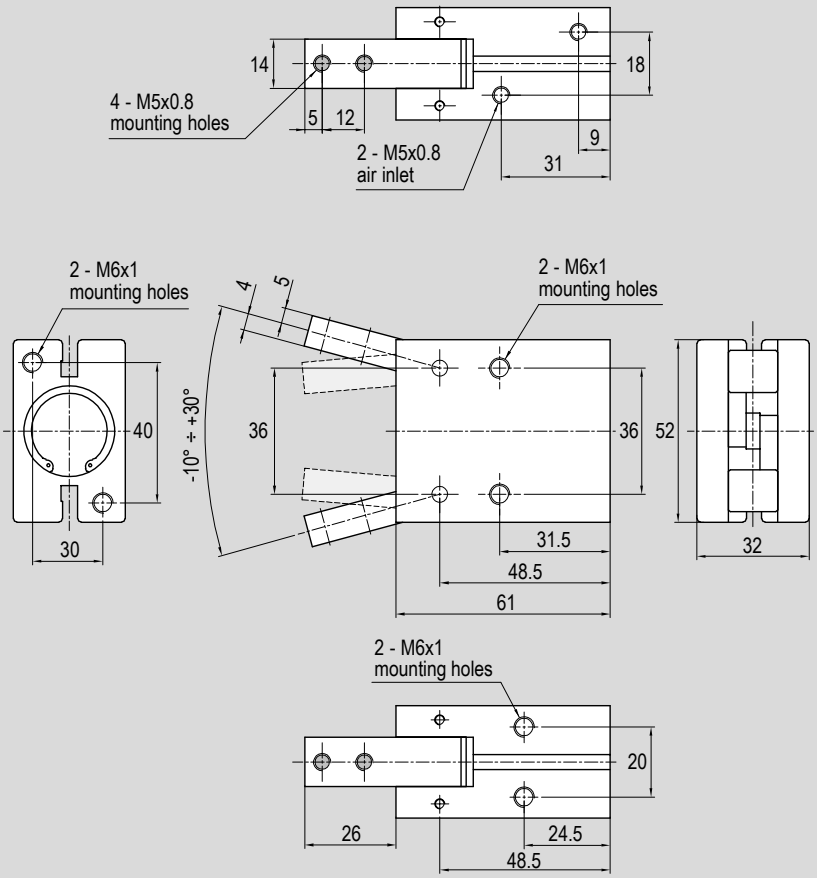

Standard dimensions

Type: **PAB**
Ø 32

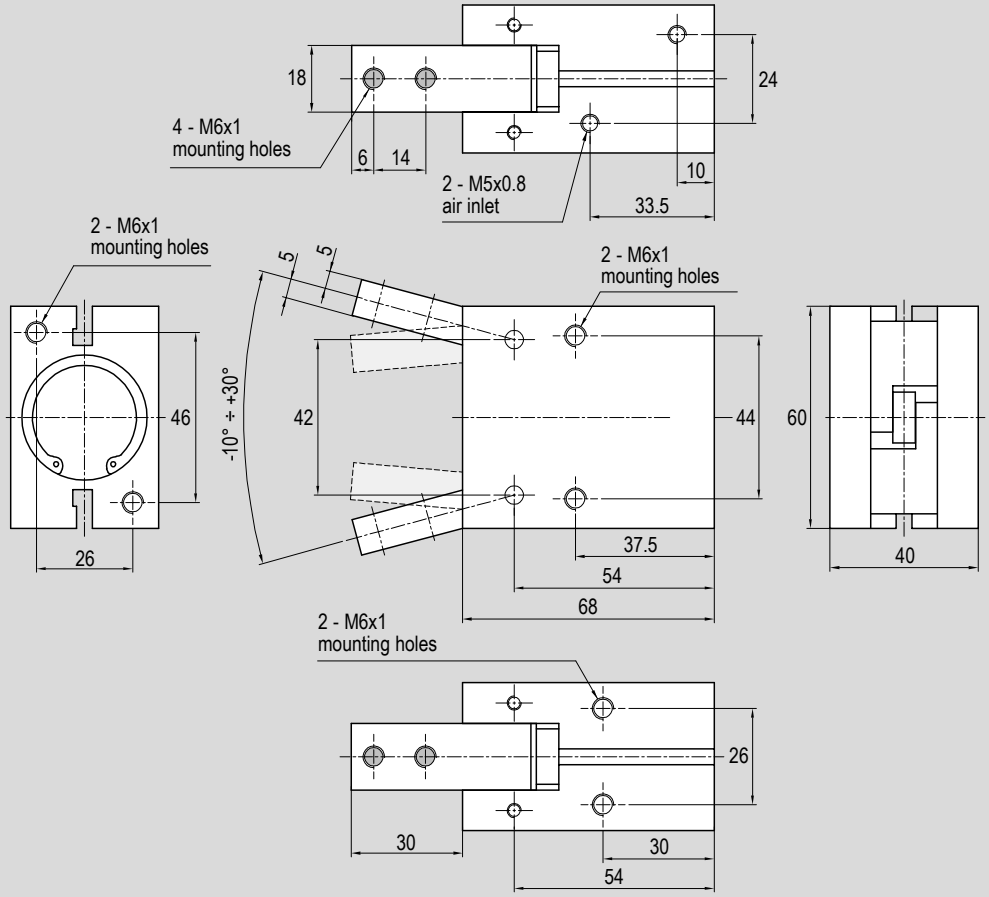

Main features

12 ÷ 32

Bores Ø

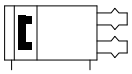

Double acting
Magnetic
Angular 180°

PAC

Type



Technical data

Bore Ø mm		12	16	20	25	32
Fluid		Compressed filtered air.				
Lubrication	Piston	With or without lubrication				
	Lever	Lubrication required on sliding parts.				
Pressure range		1,5 ÷ 7 bar				
Temperature range		0°C ÷ +60°C				
Lever open/close angle		-1° ÷ +180°				
Maximum operation frequency		60/min.				
Ports		M5				
Maximum length of gripping point **L**		40 mm	80 mm	100 mm	120 mm	140 mm
Theoretical gripping force **M** (Kgf·cm)	Closing	0,20 x **P**	0,80 x **P**	1,70 x **P**	3,40 x **P**	6,10 x **P**
	Opening	0,50 x **P**	1,10 x **P**	2,30 x **P**	4,30 x **P**	8,10 x **P**
Effective gripping force **F** (N)		**F** = **M** / **L** x 0,90				
Weight (g)		100	160	550	750	1230

Key
F = effective gripping force; **M** = theoretical gripping force; **L** = maximum length of gripping point; **P** = operating pressure;
See also table at page 1.60.31

Codes

Function	**PAC** Bore Ø mm				
	12	16	20	25	32
Double acting	170664	075013	075017	075024	075062

Standard dimensions

Type: **PAC**

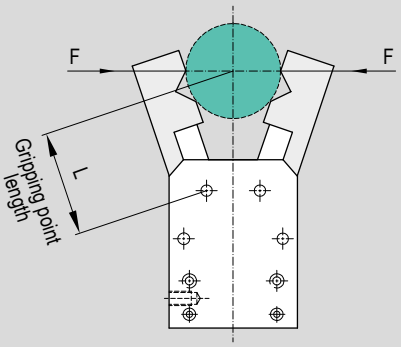

Bore: Ø **12**

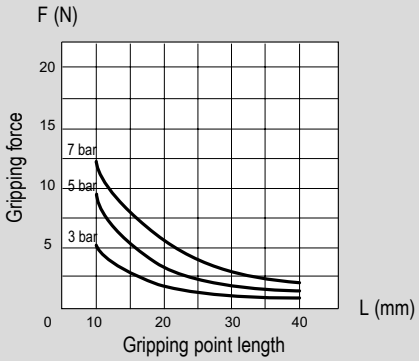

Bore: Ø **16**

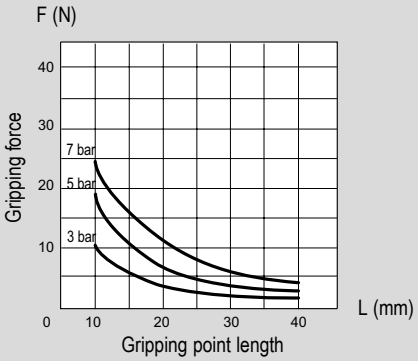

Bore: Ø **20**

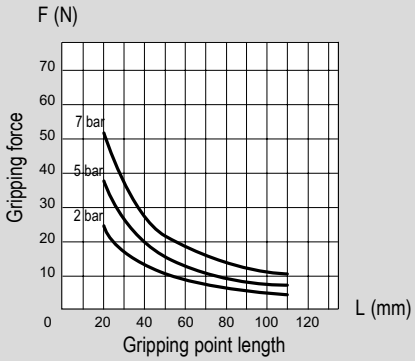

Bore: Ø **25**

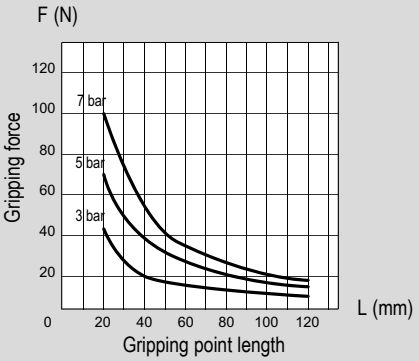

Bore: Ø **32**

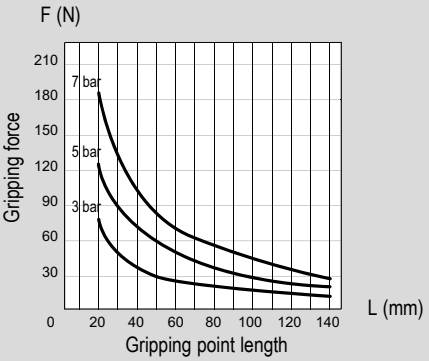

Standard dimensions

Type: **PAC**
Ø 12

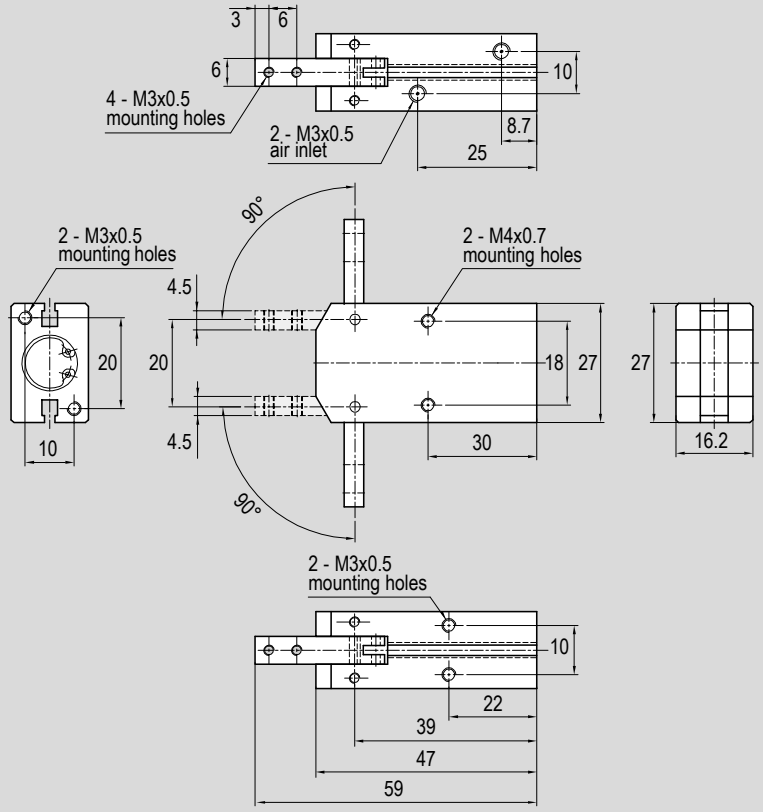

Type: **PAC**
Ø 16

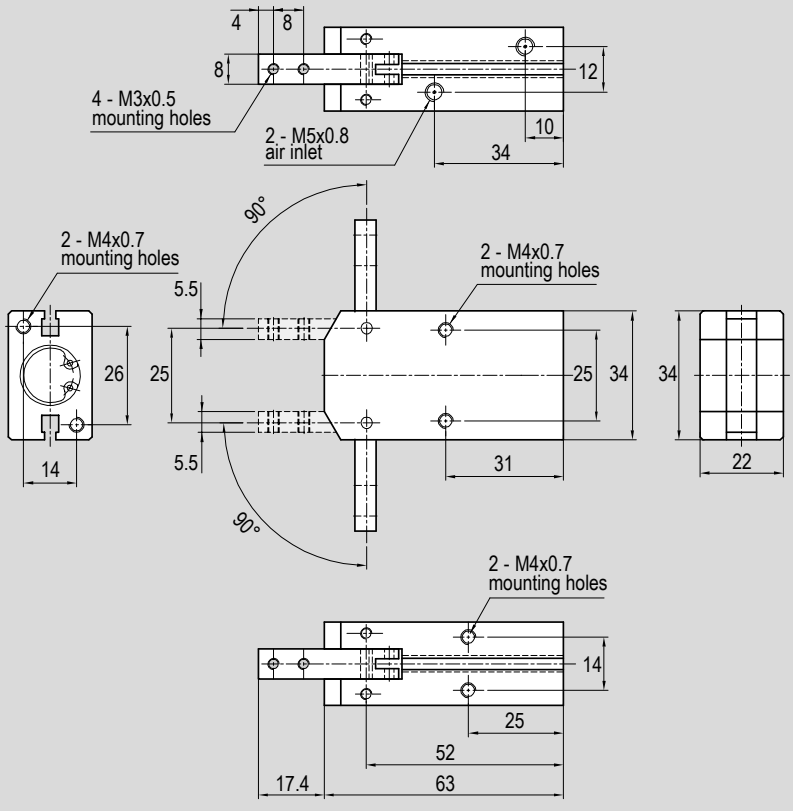

Standard dimensions

Type: **PAC**
Ø 20

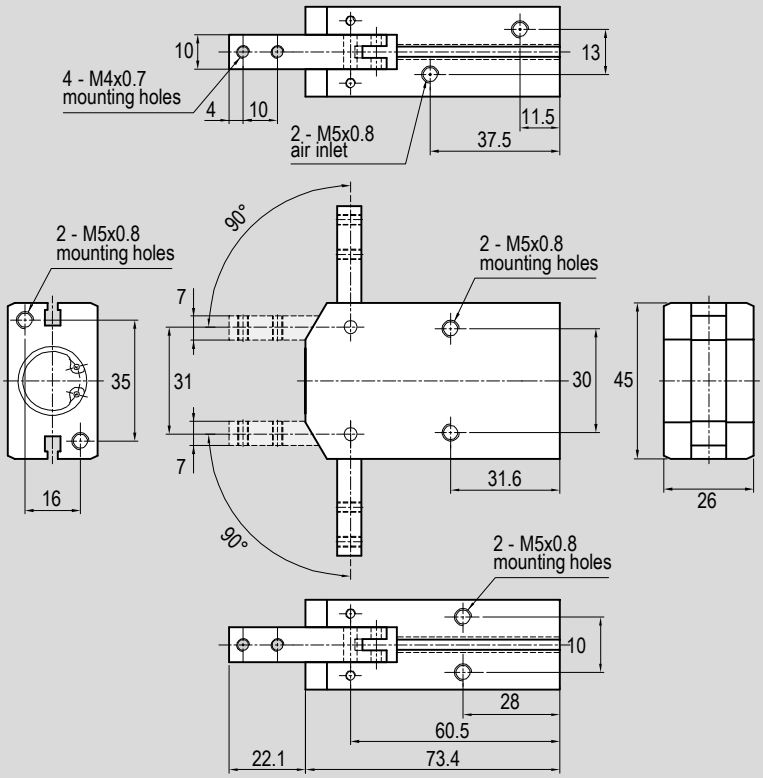

Type: **PAC**
Ø 25

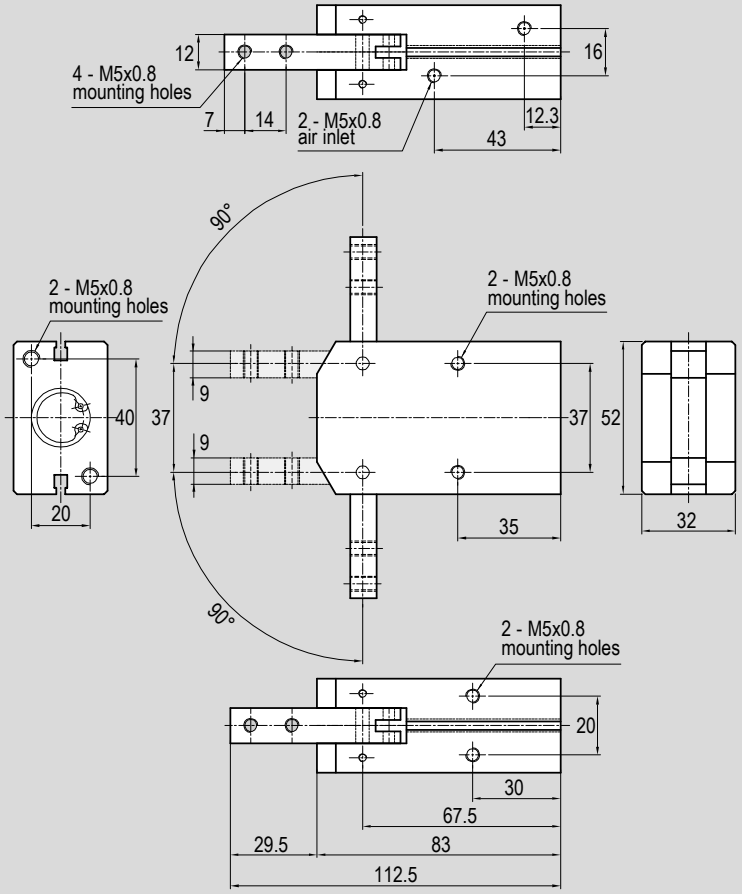

Standard dimensions

Type: **PAC**
Ø 32

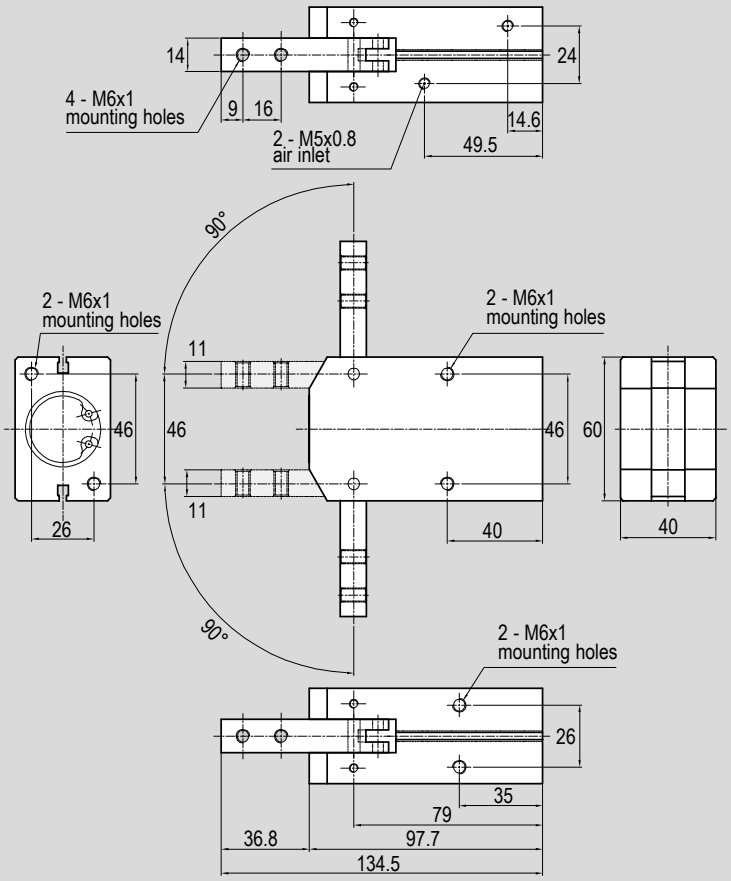

Hand grips
Series PPB

Main features

10 ÷ 32

Bores Ø

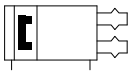

Double acting
Magnetic
Parallel

PPB

Type



Technical data

Bore Ø mm		10	16	20	25	32
Fluid		Compressed filtered air.				
Lubrication	Piston	With or without lubrication				
	Lever	Lubrication required on sliding parts.				
Pressure range		1,5 ÷ 7 bar				
Temperature range		0°C ÷ +60°C				
Lever open/close stroke		4 mm	8 mm	12 mm	14 mm	16 mm
Maximum operation frequency		100/min.				
Ports		M3	M5			
Maximum length of gripping point		30 mm	40 mm	60 mm	70 mm	85 mm
Effective gripping force* (N)	Closing	0,80	2,40	4,70	7,50	10,00
	Opening	0,50	1,80	3,50	6,00	8,50
Weight (g)		120	160	550	750	1230

*See also table at page 1.60.41

Codes

Function	**PPB** Bore Ø mm				
	10	16	20	25	32
Double acting	075025	075027	075063	075028	075029

Gripping forces

Type: **PPB**

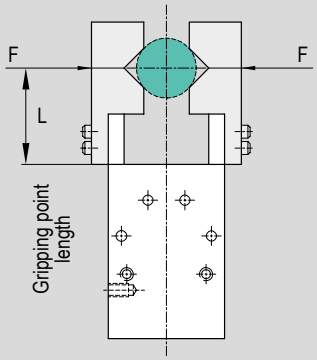

Bore: Ø **10**

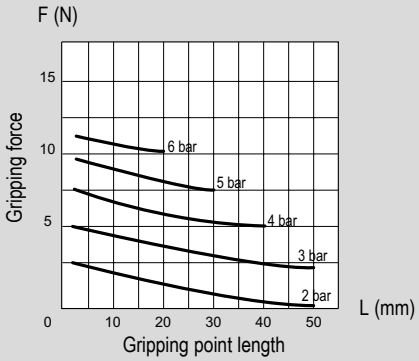

Bore: Ø **16**

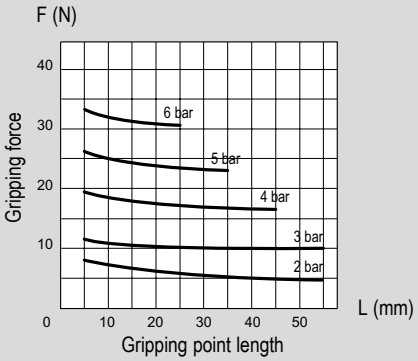

Bore: Ø **20**

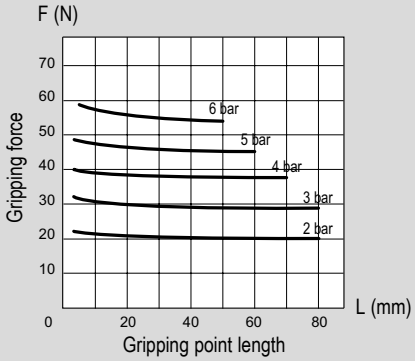

Bore: Ø **25**

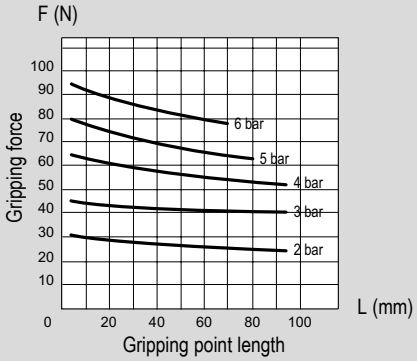

Bore: Ø **32**

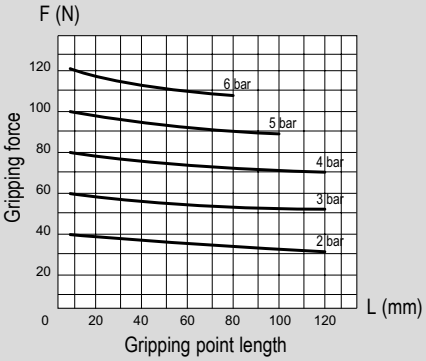

Standard dimensions

Type: **PPB**
Ø 10

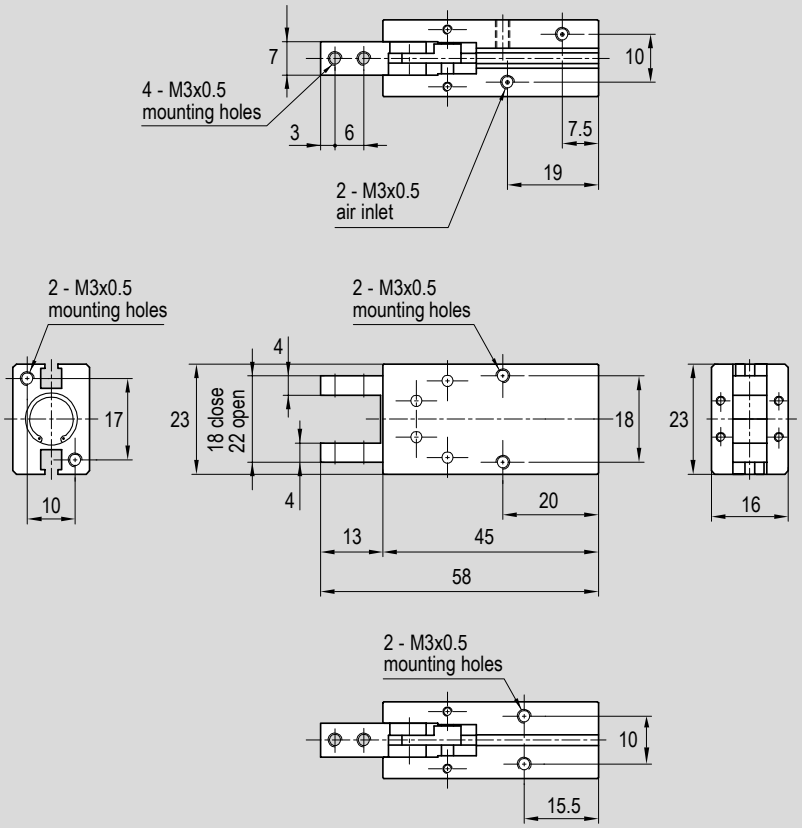

Type: **PPB**
Ø 16

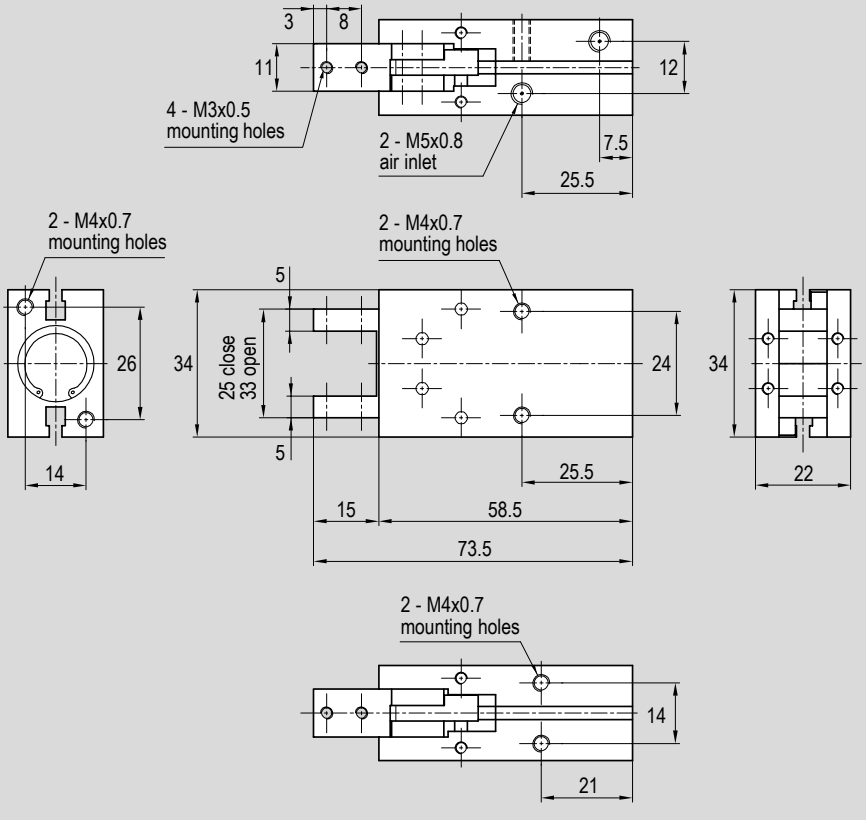

Standard dimensions

Type: **PPB**
Ø 20

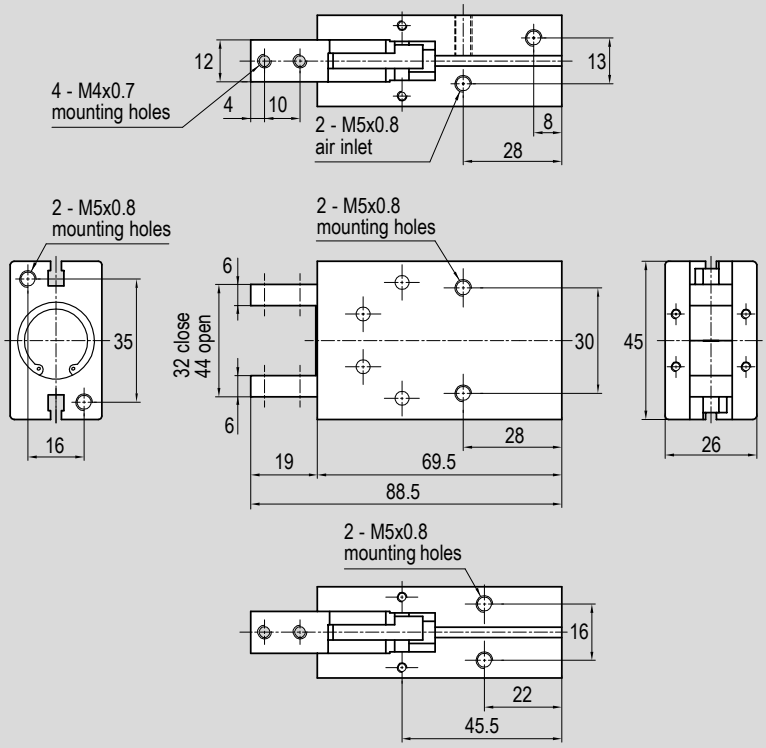

Type: **PPB**
Ø 25

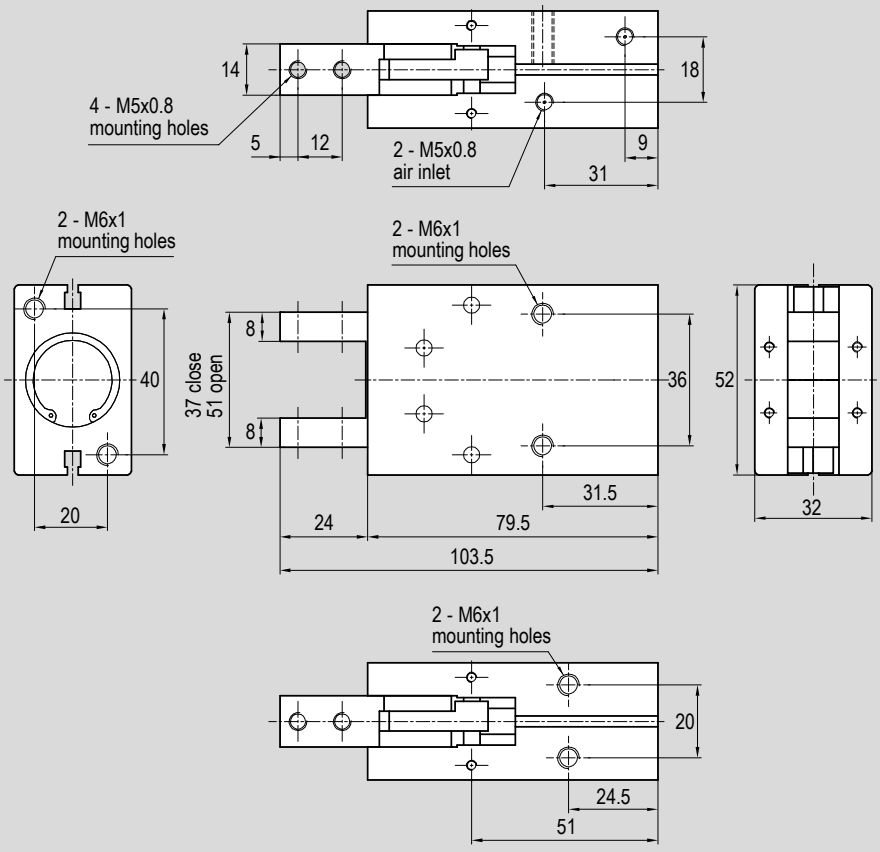

Standard dimensions

Type: **PPB**
Ø 32

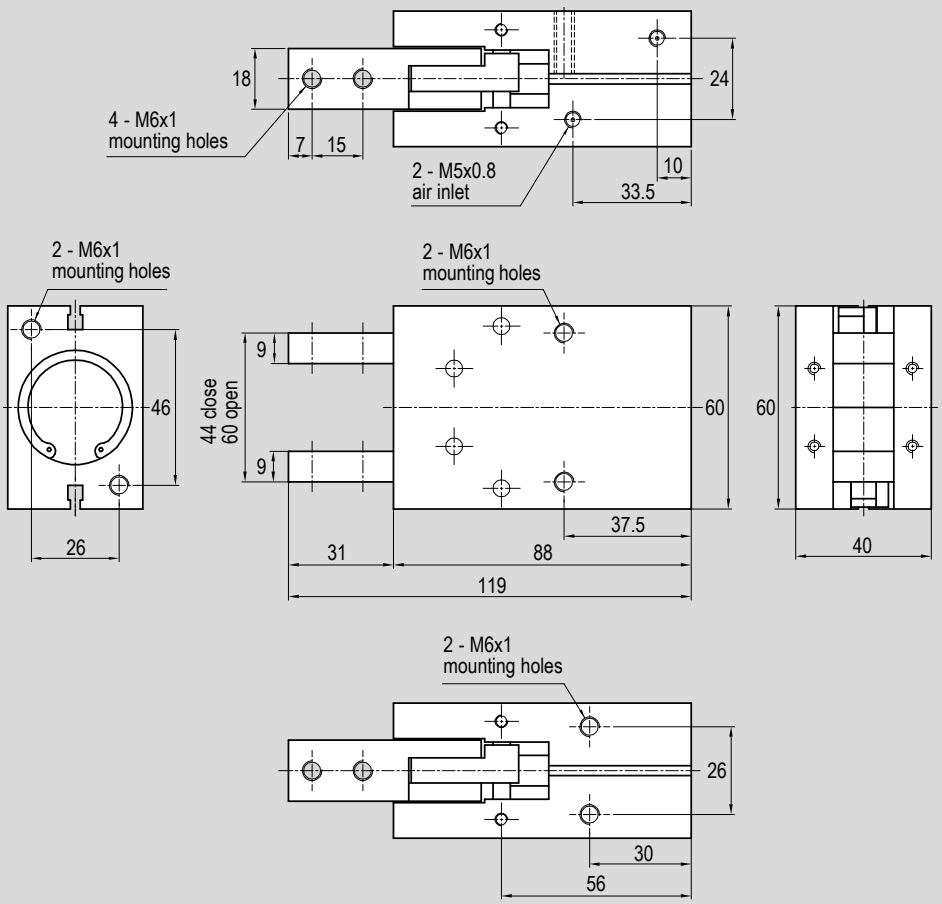

Hand grips
Series PPC

Main features

6 ÷ 40

Bores Ø

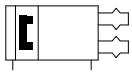

Double acting
Magnetic
Guided Parallel

PPC

Type



Technical data

Bore Ø mm			6	10	16	20	25	32	40
Fluid			Compressed filtered air.						
Lubrication			Non richiesta						
Pressure range			2 ÷ 7 bar		1 ÷ 7 bar				
Temperature range			0°C ÷ +60°C						
Lever open/close stroke			4 mm		6 mm	10 mm	14 mm	22 mm	30 mm
Maximum operation frequency			100/min.					60/min.	
Ports			M3		M5				
Effective gripping force* (N)	Double acting	Opening	6,1	17,0	45,0	66,0	104,0	193,0	318,0
		Closing	3,3	11,0	34,0	42,0	65,0	158,0	254,0
	Single acting	Closing	1,9	7,1	27,0	33,0	45,0	131,0	217,0
Weight (g)			25	60	140	270	490	810	1.370

*See also tables at page 1.60.51 and 1.60.52

Codes

Function	**PPC** Bore Ø mm						
	6	10	16	20	25	32	40
Double acting	170667	170668	075030	075031	075034	075035	170669
Single acting	170678	170679	170680	170681	170682	170683	170684

Gripping forces

Type: **PPC**

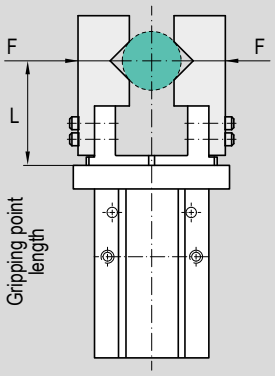

Bore: Ø **6**

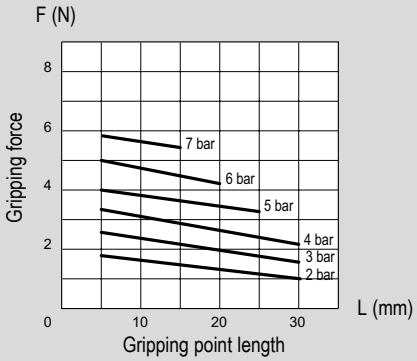

Bore: Ø **10**

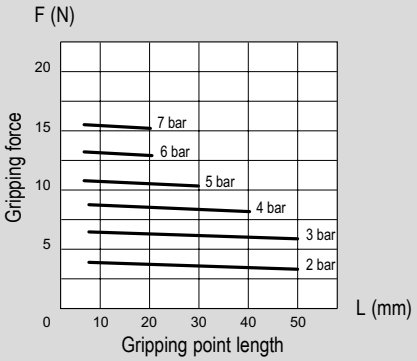

Bore: Ø **16**

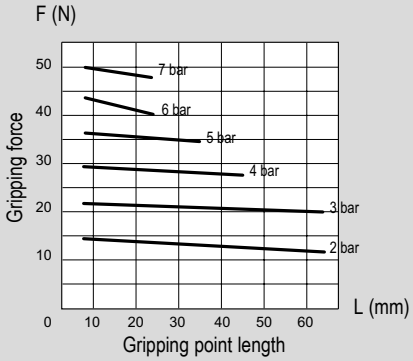

Bore: Ø **20**

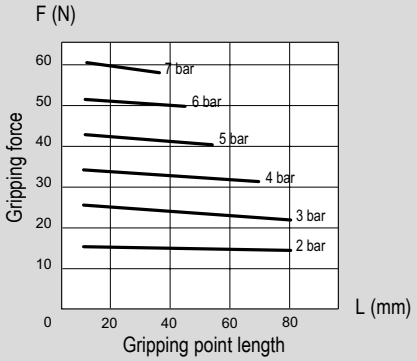

Bore: Ø **25**

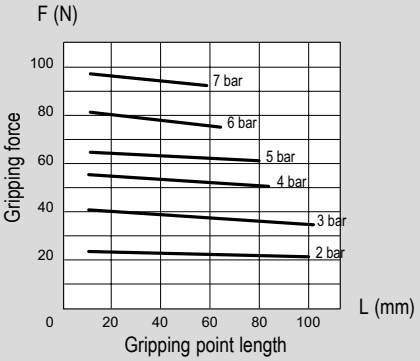

Bore: Ø **32**

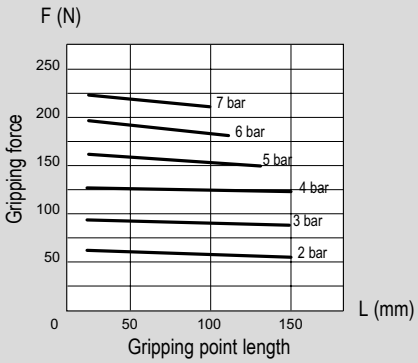

Bore: Ø **40**

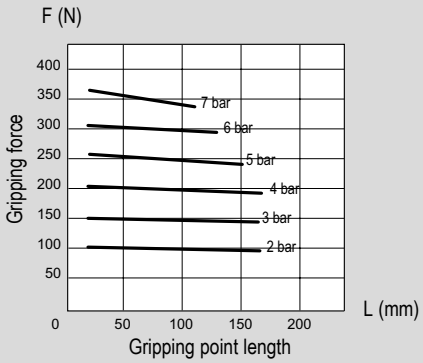

Gripping forces

Type: **PPC**

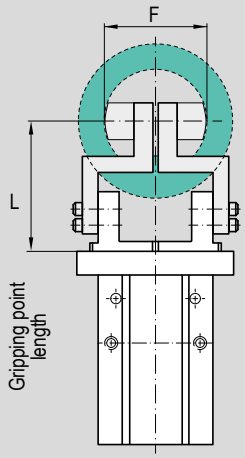

Bore: Ø **6**

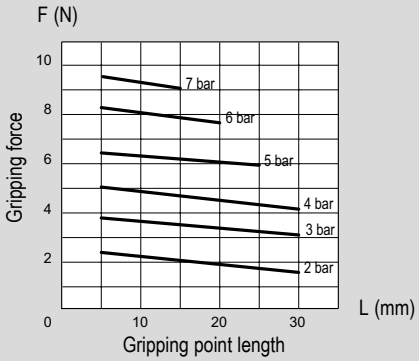

Bore: Ø **10**

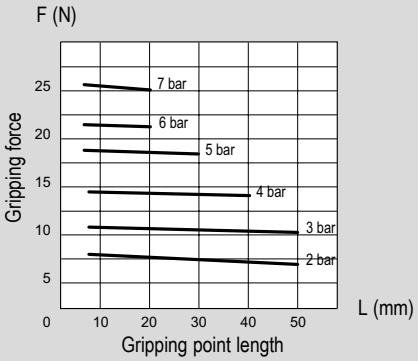

Bore: Ø **16**

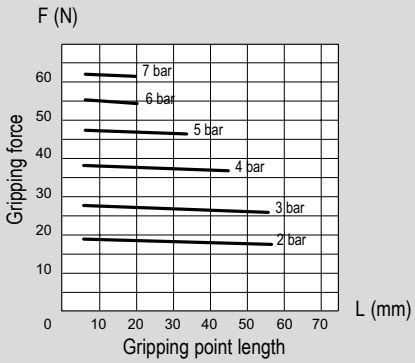

Bore: Ø **20**

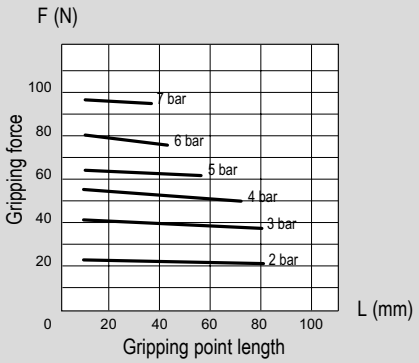

Bore: Ø **25**

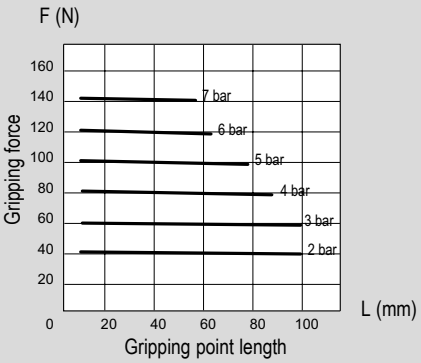

Bore: Ø **32**

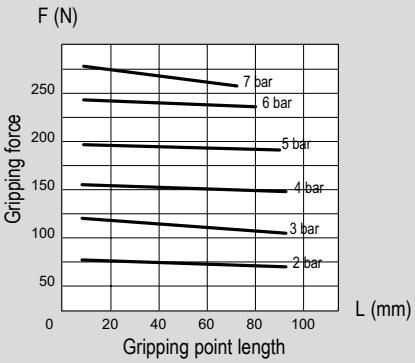

Bore: Ø **40**

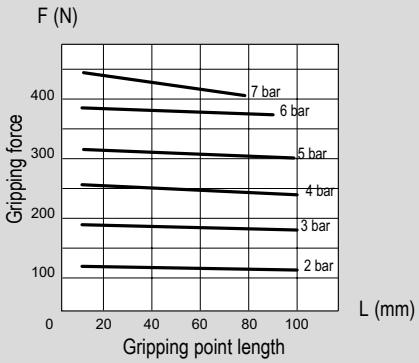

Standard dimensions

Type: **PPC**
Ø 6

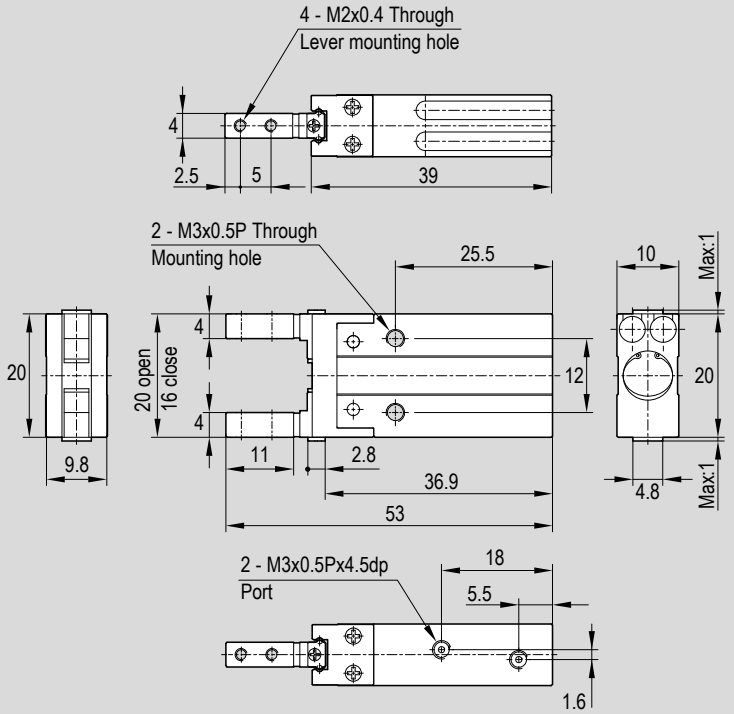

Type: **PPC**
Ø 10

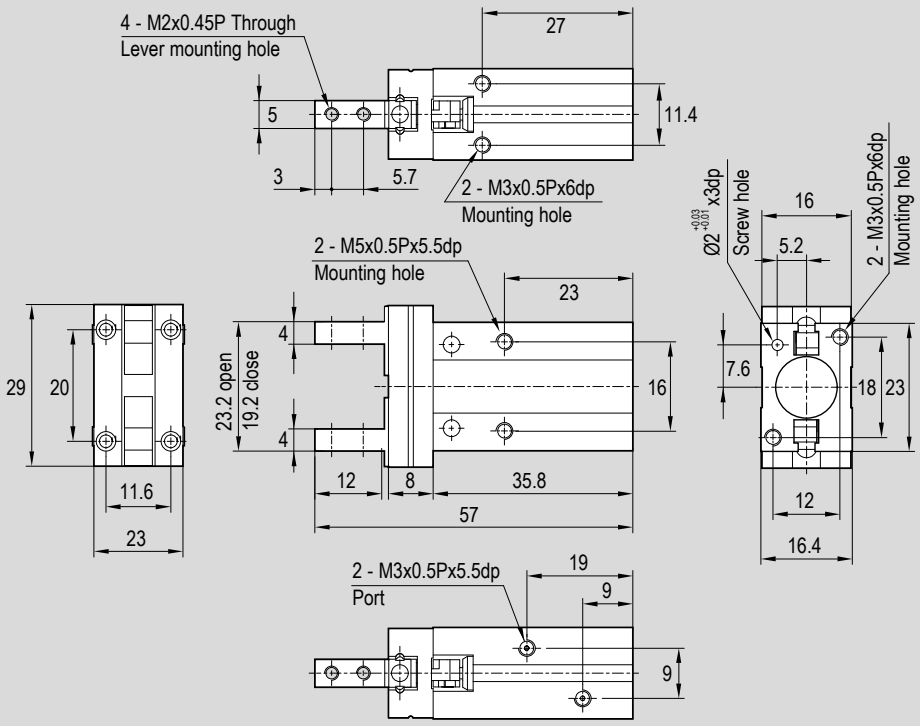

Standard dimensions

Type: **PPC**
Ø 16

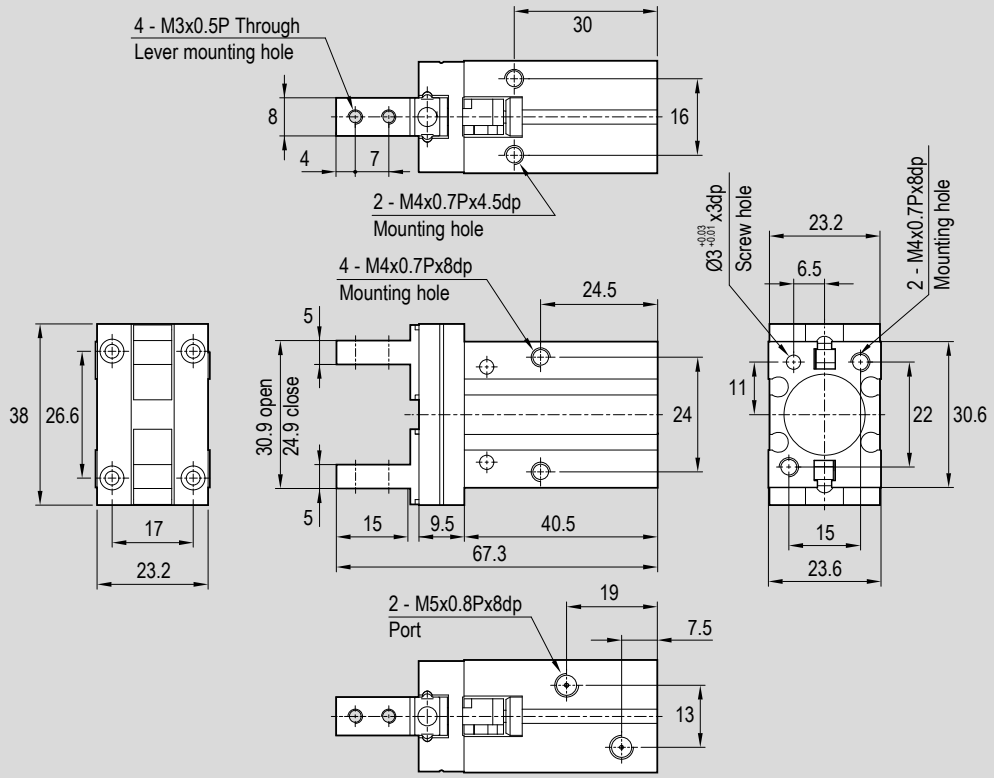

Type: **PPC**
Ø 20

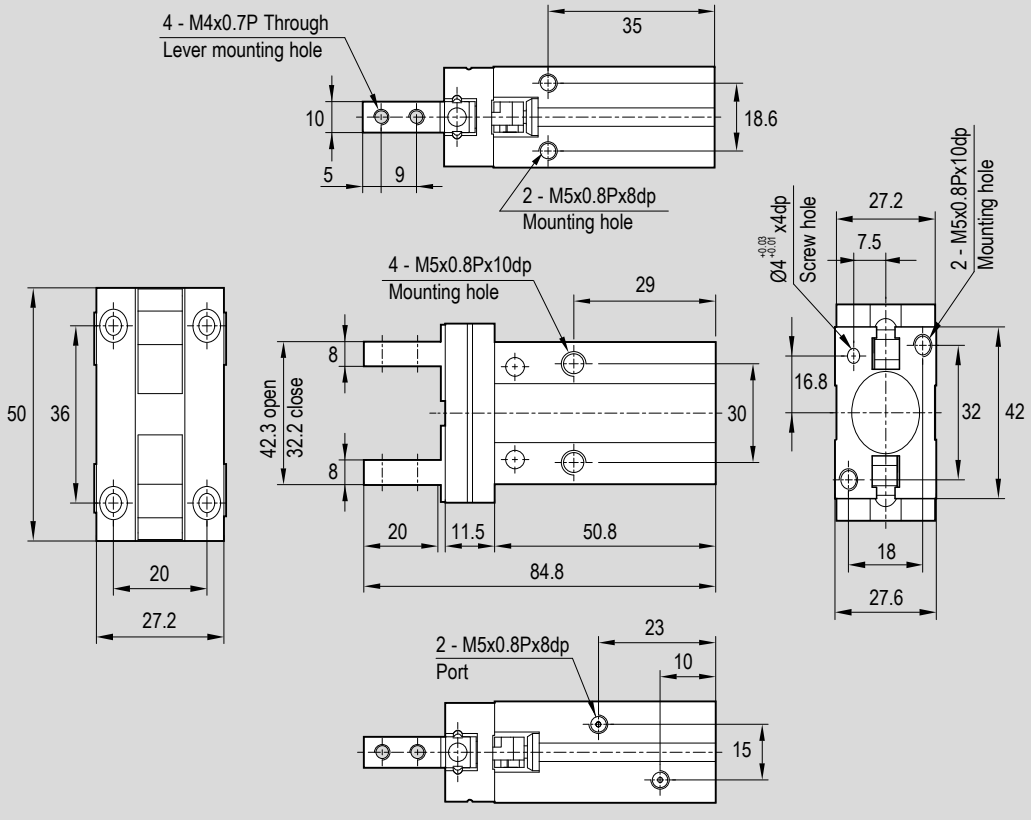

Standard dimensions

Type: **PPC**
Ø 25

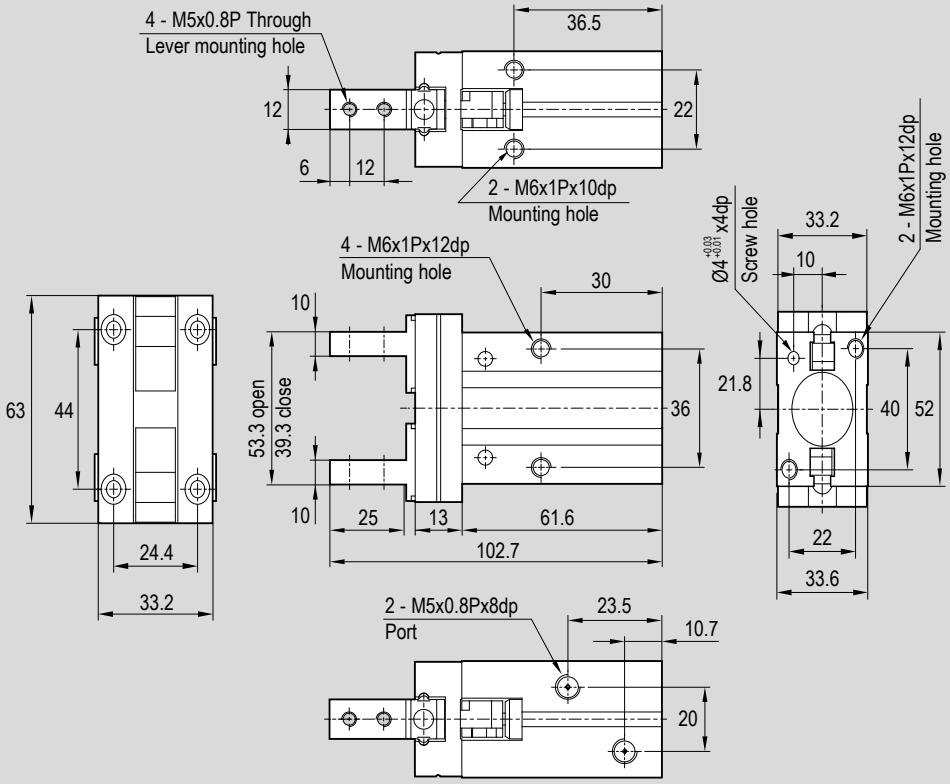

Type: **PPC**
Ø 32

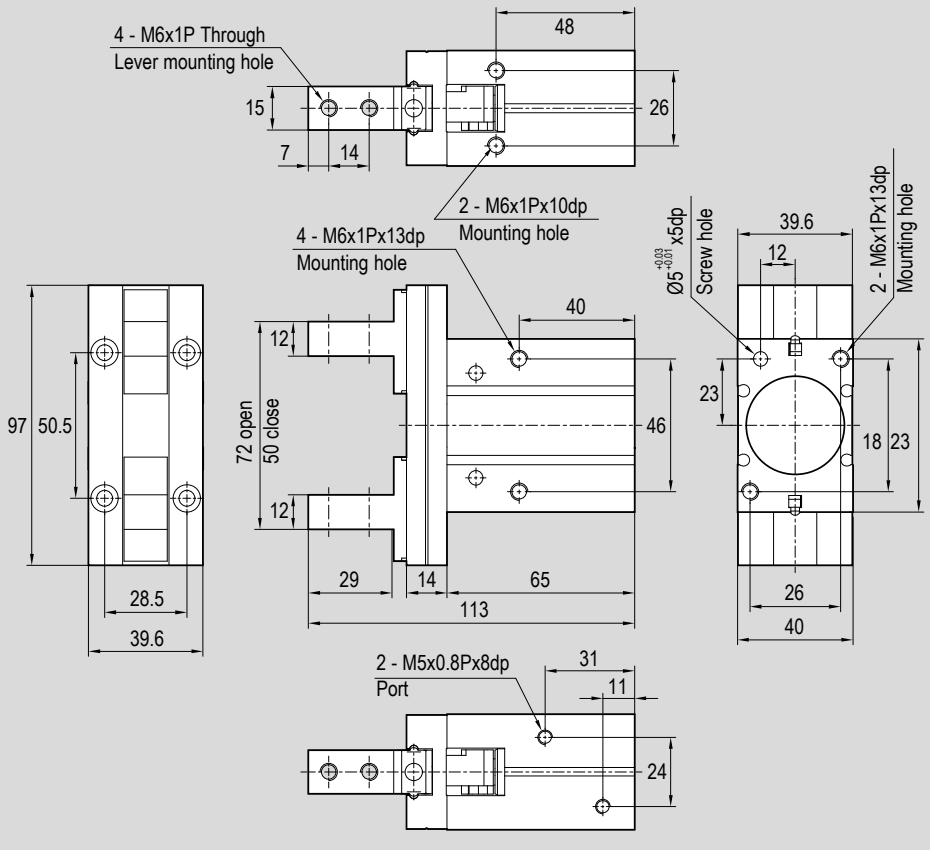

Standard dimensions

Type: **PPC**
Ø 40

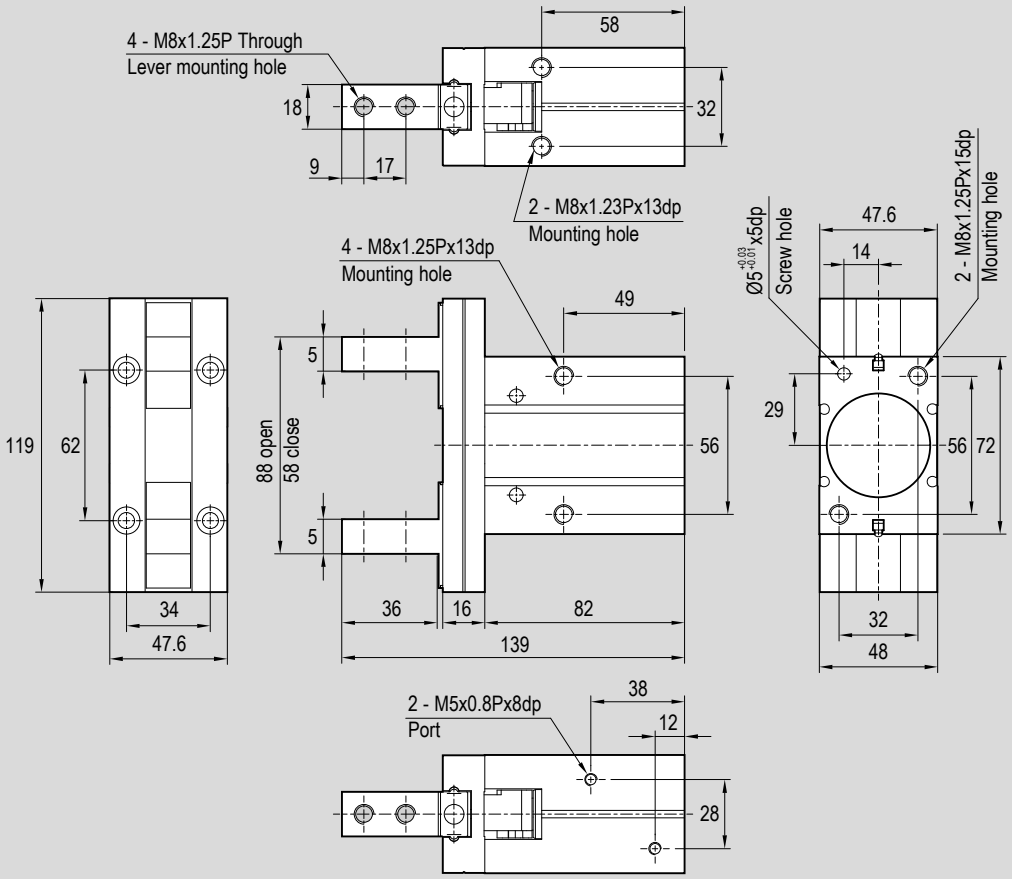

Notes

Main features

10 ÷ 40

Bores Ø

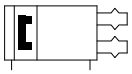

Double acting
Magnetic
Parallel Long Stroke

PPD

Type



Technical data

Bore Ø mm	10			16			20			25			32			40		
Fluid	Compressed filtered air.																	
Lubrication	Not required																	
Pressure range	1,5 ÷ 7 bar																	
Temperature range	0°C ÷ +60°C																	
Lever open/close stroke (mm)	20	40	60	30	60	80	40	80	100	50	100	120	70	120	160	100	160	200
Maximum operation frequency	40/min.												20/min.					
Ports	M5															1/8"		
Maximum length of gripping point	40 mm			60 mm			80 mm			90 mm			100 mm					
Effective gripping force* (N)	14			44			73			128			228			396		
Weight (g)	290	350	440	570	790	940	1.000	1.450	1.700	1.700	2.600	2.800	3.000	4.003	5.000	5.300	6.900	8.000

*Gripping point 30 mm at 5 bar; see also tables at page 1.60.61 and 1.60.62

Codes and standard strokes

	PPD Bore Ø mm					
Stroke mm	10	16	20	25	32	40
20	075037					
30		075040				
40	075038		075044			
50				075048		
60	075039	075041				
70					075051	
80		075042	075045			
100			075047	075049		170670
120				075050	075052	
160					075002	170671
200						170672

Key
Standard stroke

Gripping forces

Type: **PPD**

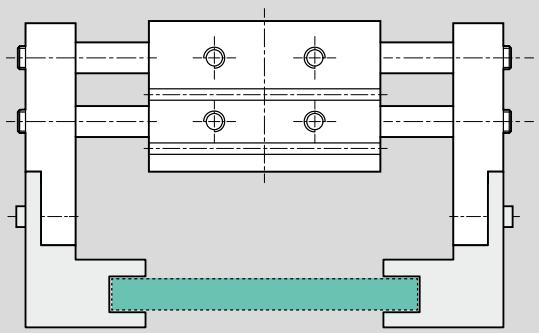

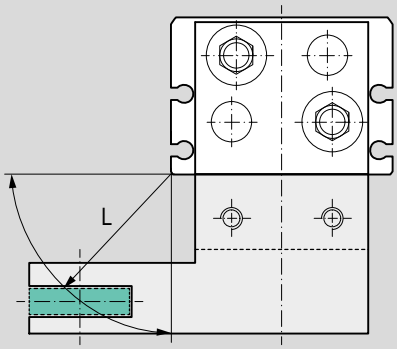

Bore: Ø **10**
Stroke: **20** mm

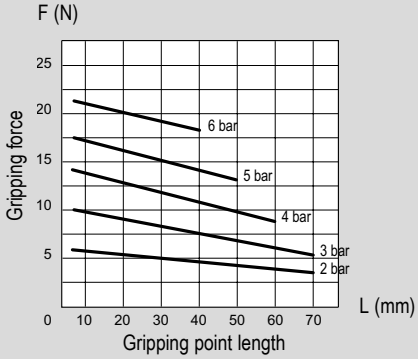

Bore: Ø **10**
Stroke: **40** mm

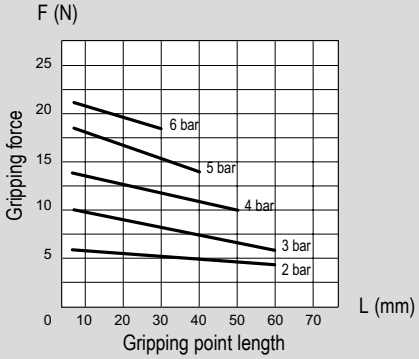

Bore: Ø **10**
Stroke: **60** mm

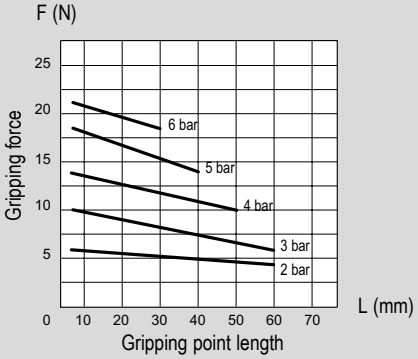

Bore: Ø **16**
Stroke: **30** mm

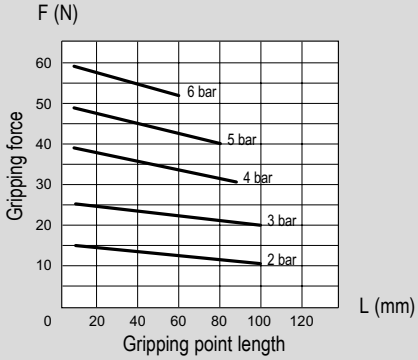

Bore: Ø **16**
Stroke: **60** mm

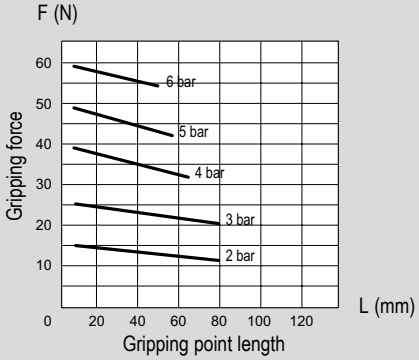

Bore: Ø **16**
Stroke: **80** mm

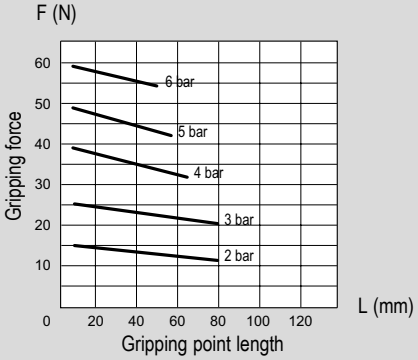

Bore: Ø **20**
Stroke: **40** mm

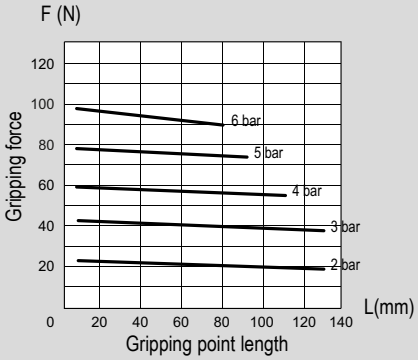

Bore: Ø **20**
Stroke: **80** mm

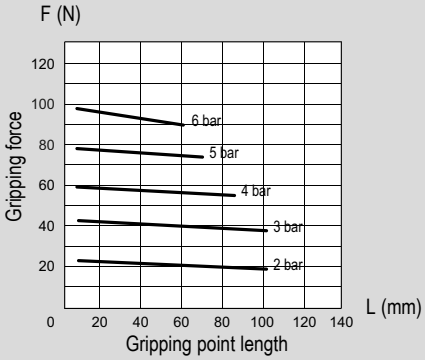

Bore: Ø **20**
Stroke: **100** mm

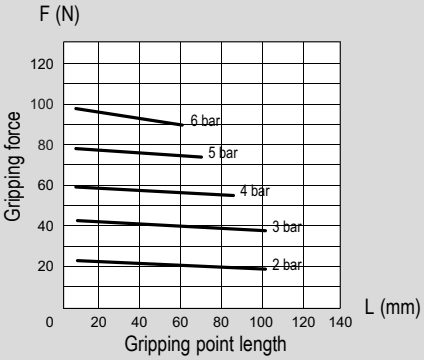

Gripping forces

Type: **PPD**

Bore: Ø **25**
Stroke: **50** mm

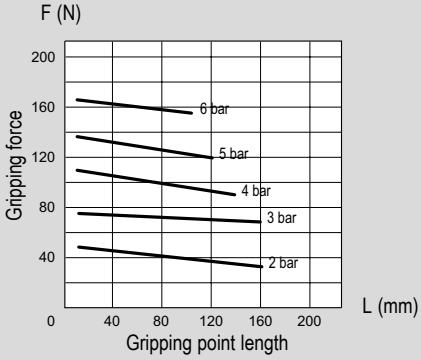

Bore: Ø **25**
Stroke: **100** mm

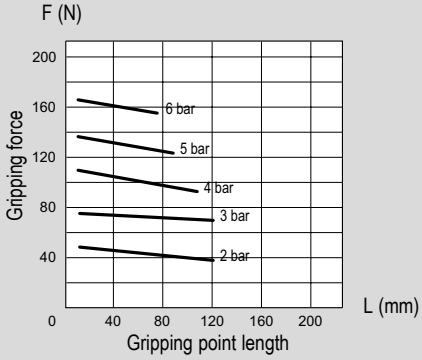

Bore: Ø **15**
Stroke: **120** mm

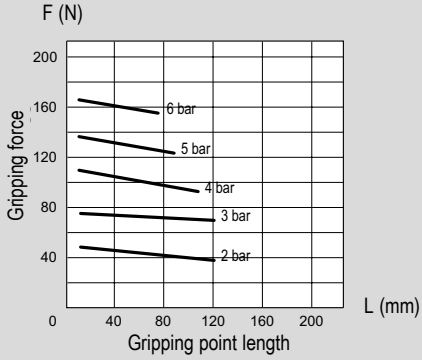

Bore: Ø **32**
Stroke: **70** mm

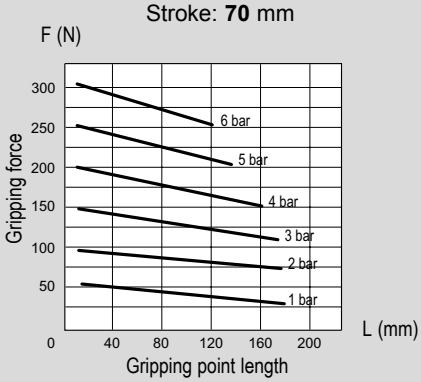

Bore: Ø **32**
Stroke: **120** mm

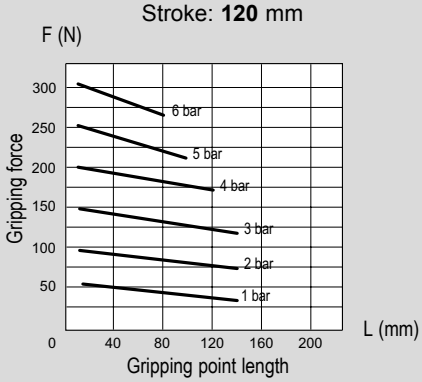

Bore: Ø **32**
Stroke: **160** mm

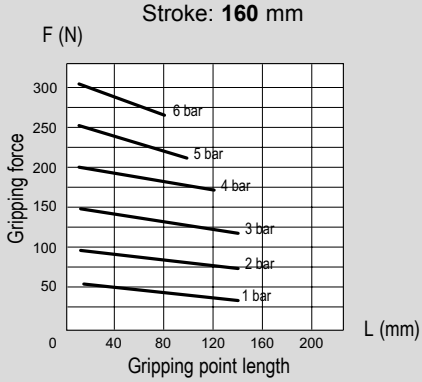

Bore: Ø **40**
Stroke: **100** mm

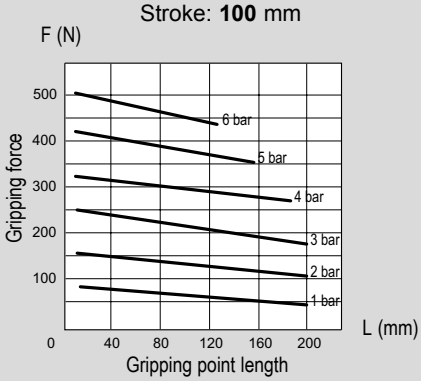

Bore: Ø **40**
Stroke: **160** mm

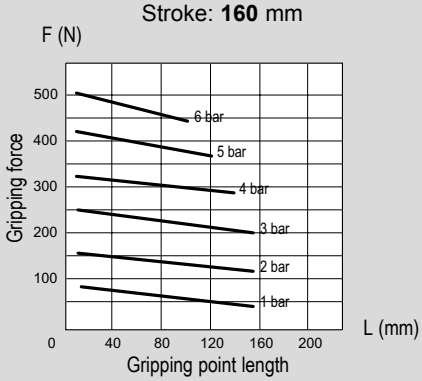

Bore: Ø **40**
Stroke: **200** mm

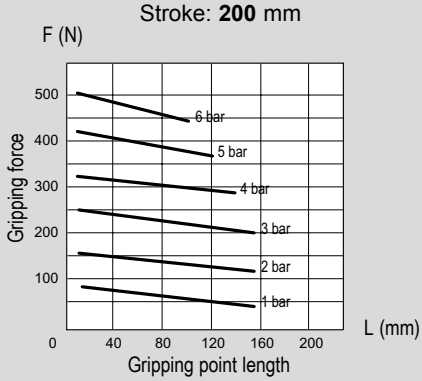

Standard dimensions

Type: **PPD**
Ø 10

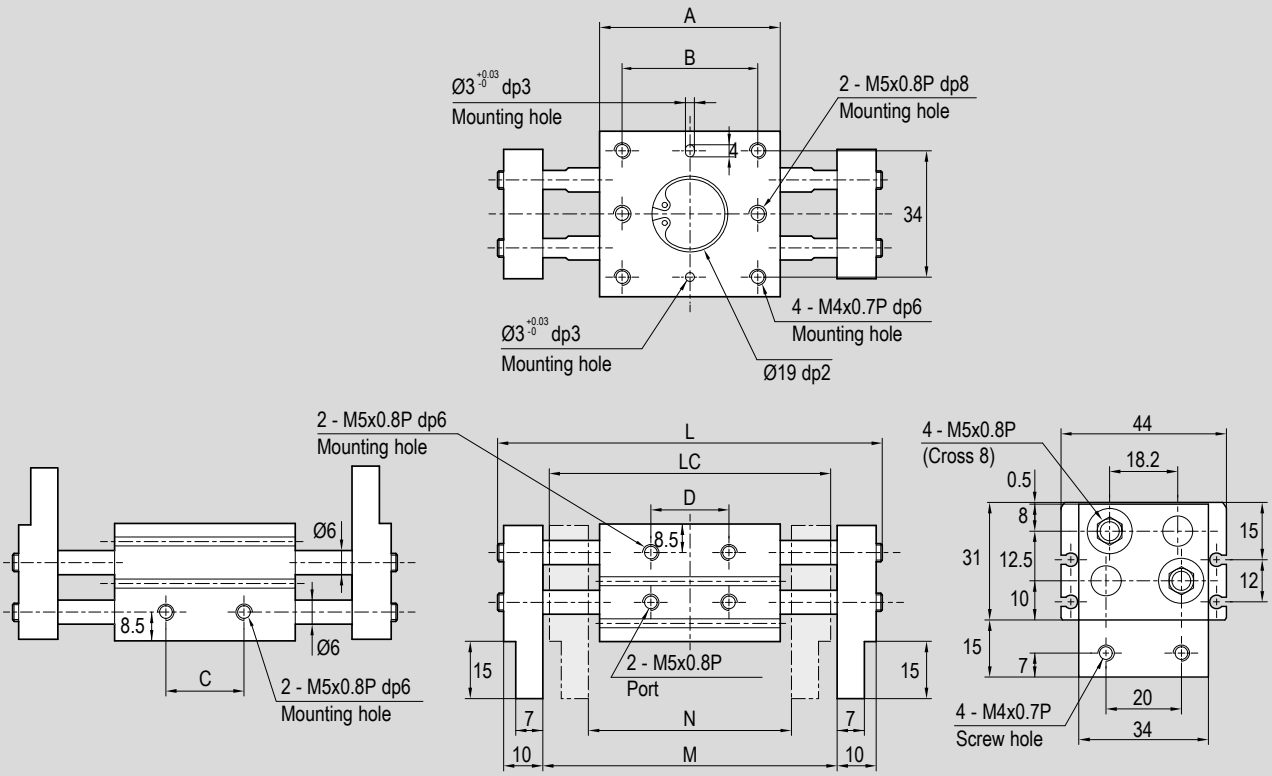

Lever stroke (mm)	A	B	C	D	L	LC	M	N
20	52	36	30	30	100	80	76	56
40	68	52	46	46	136	96	112	72
60	86	70	64	64	174	114	150	90

Standard dimensions

Type: **PPD**
Ø 16

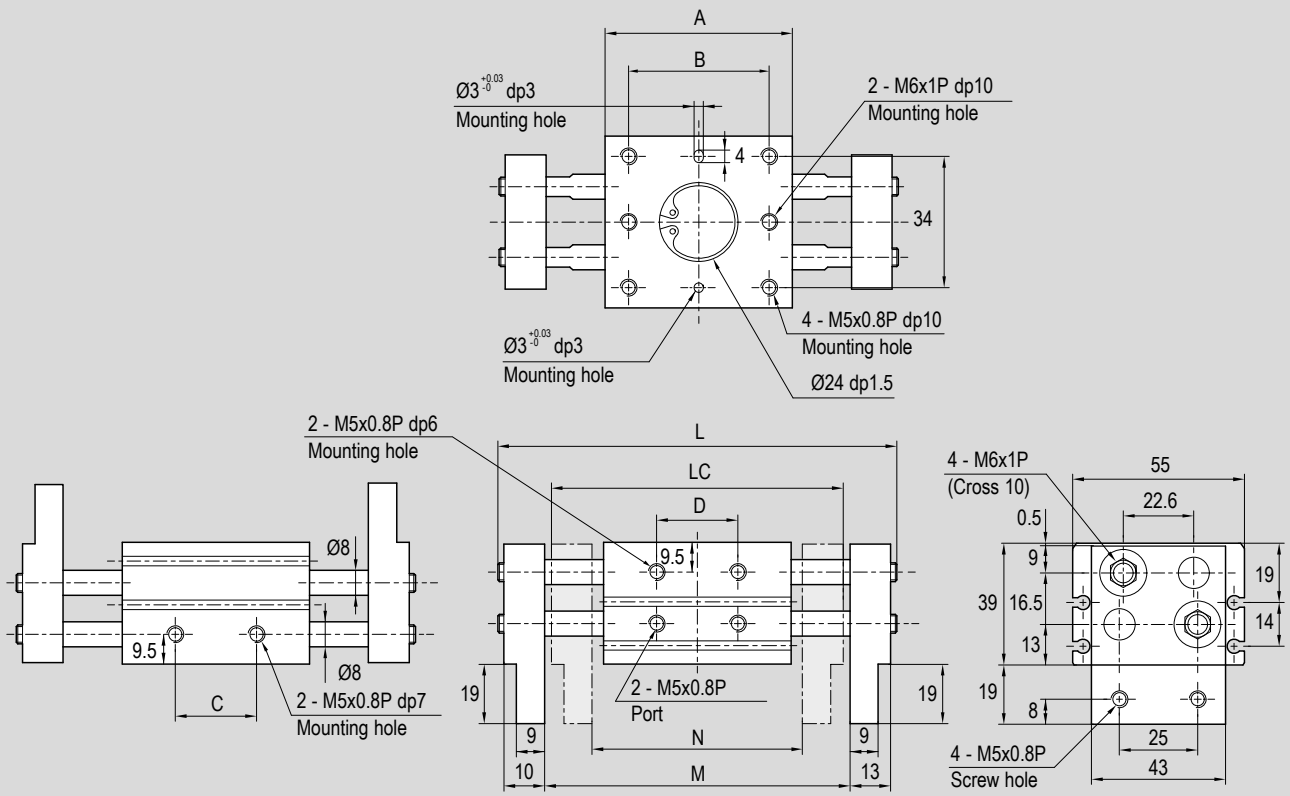

Lever stroke (mm)	A	B	C	D	L	LC	M	N
30	60	45	26	26	128	98	98	68
60	90	75	56	56	188	128	158	98
80	110	95	76	76	228	148	198	118

Standard dimensions

Type: **PPD**
Ø 20

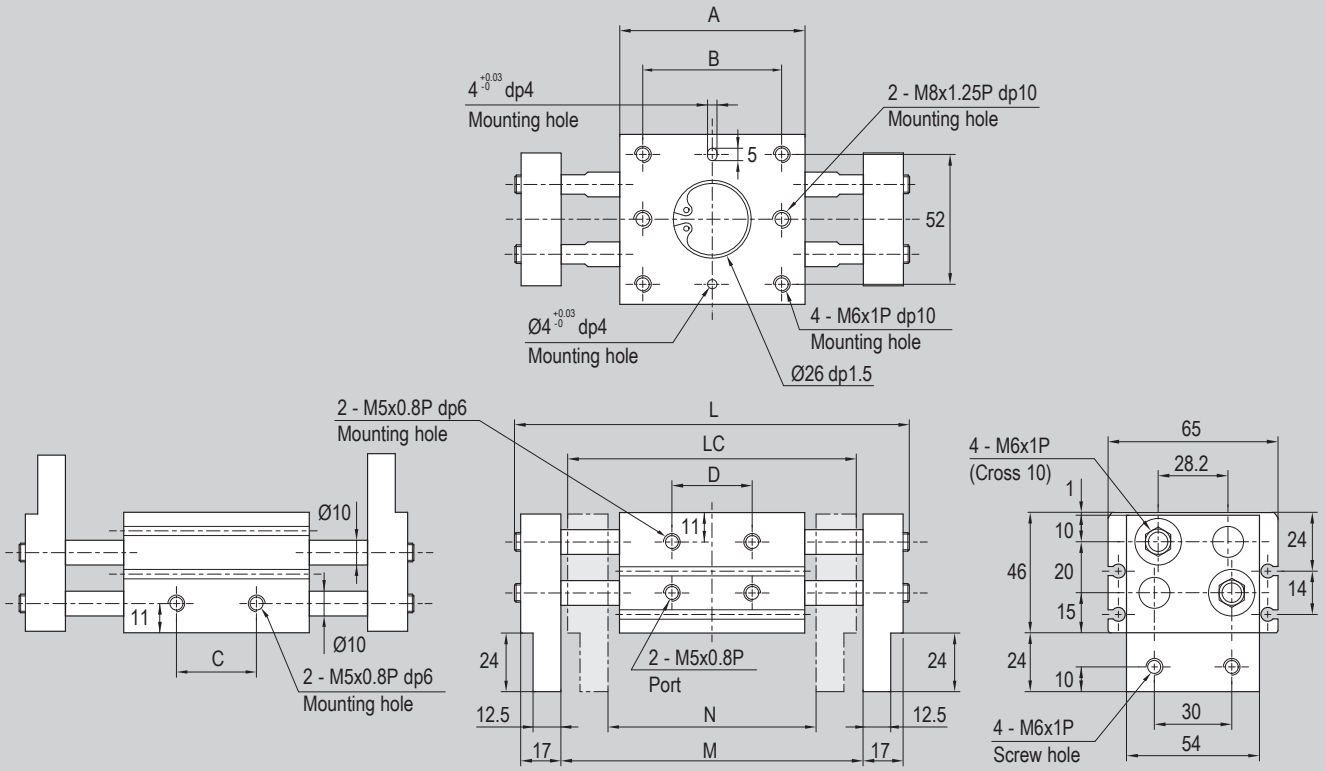

Lever stroke (mm)	A	B	C	D	L	LC	M	N
40	71	58	40	40	157	113	119	79
80	113	100	82	82	239	159	201	121
100	133	120	102	102	279	179	241	141

Standard dimensions

Type: **PPD**
Ø 25

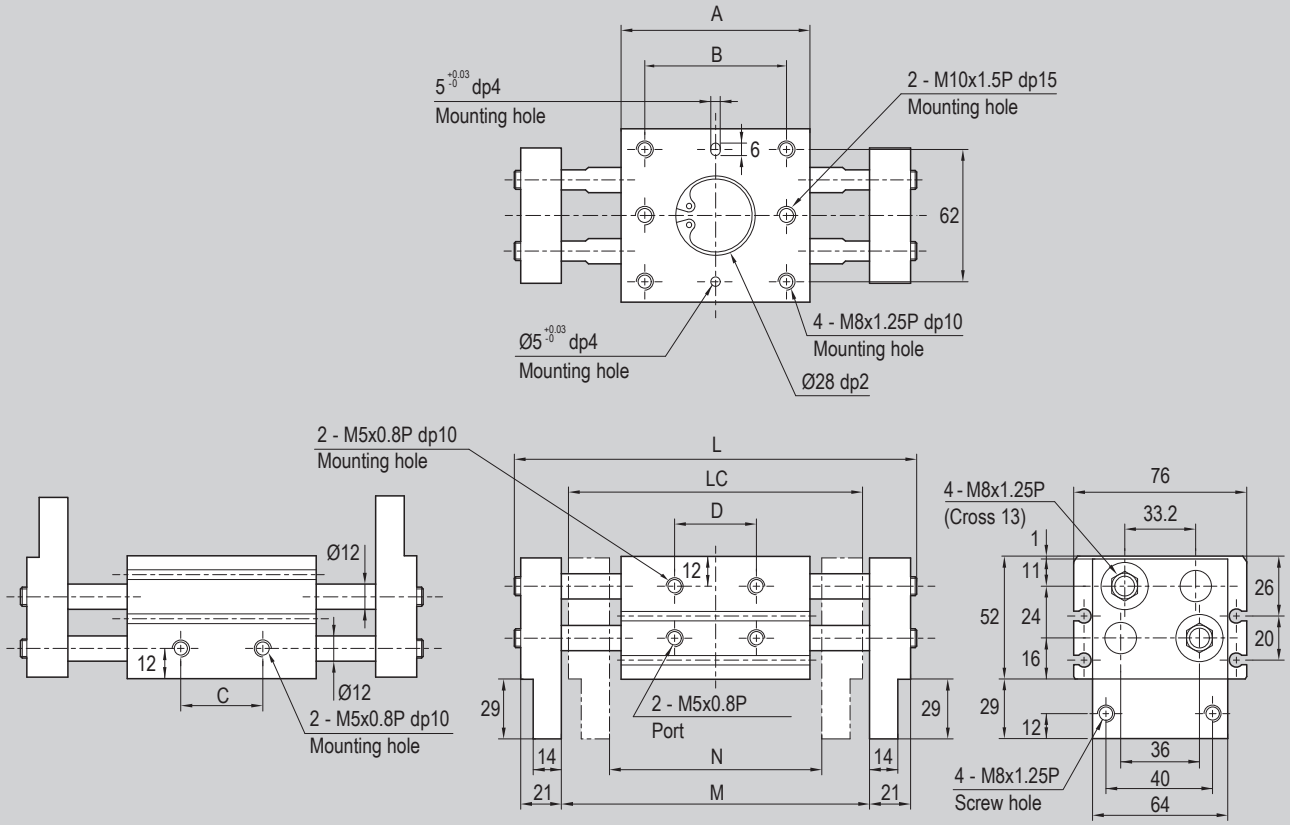

Lever stroke (mm)	A	B	C	D	L	LC	M	N
50	88	70	50	50	192	138	146	96
100	142	124	104	104	296	196	250	150
120	160	142	122	122	334	214	288	168

Standard dimensions

Type: **PPD**
Ø 32

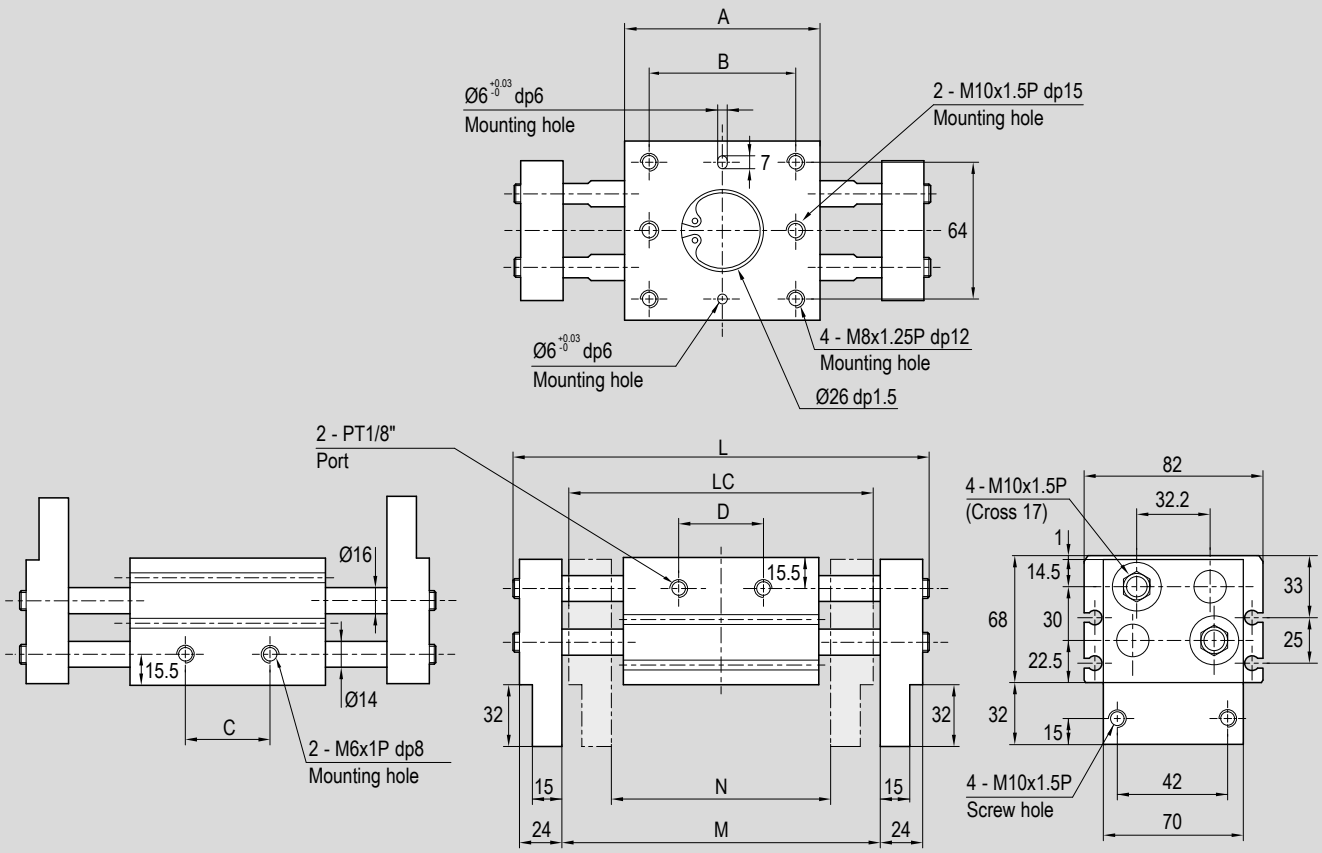

Lever stroke (mm)	A	B	C	D	L	LC	M	N
70	110	86	69	69	240	170	188	118
120	158	134	117	117	338	218	286	166
160	202	178	161	161	422	262	370	210

Standard dimensions

Type: **PPD**
Ø 40

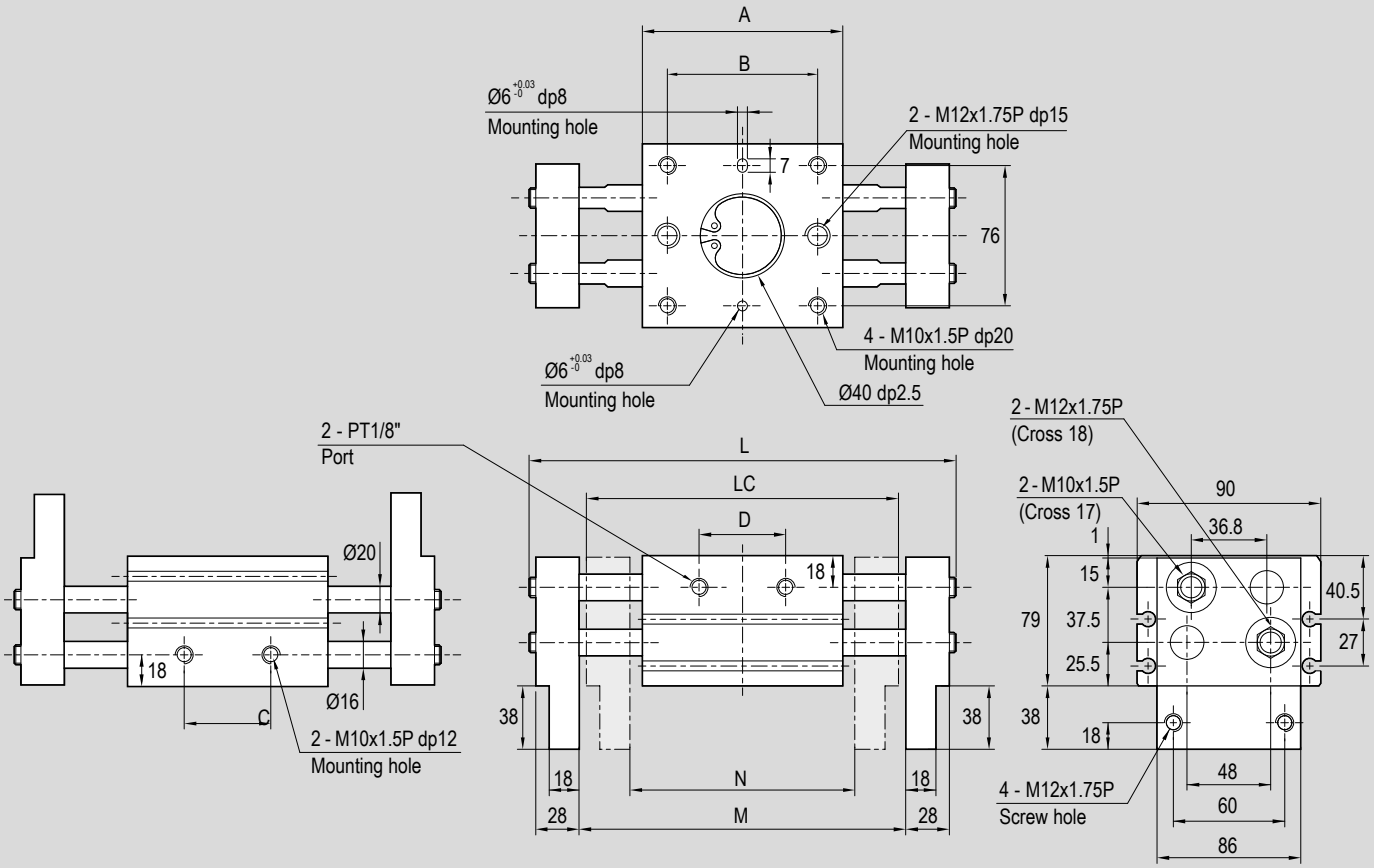

Lever stroke (mm)	A	B	C	D	L	LC	M	N
100	148	116	80	80	324	224	264	164
160	206	174	138	138	442	282	382	222
200	246	214	178	178	522	322	462	262

Dimensions options

Type: **..B**
Ø 10

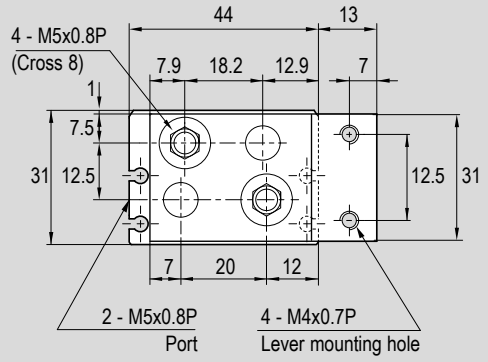

Type: **..B**
Ø 16

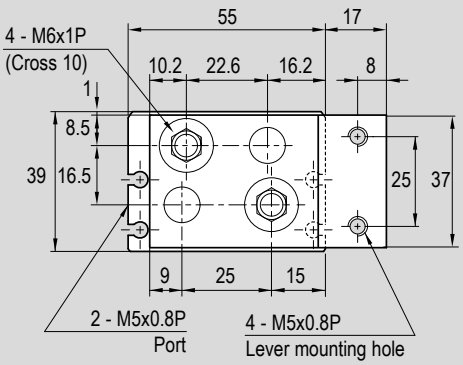

Type: **..B**
Ø 20

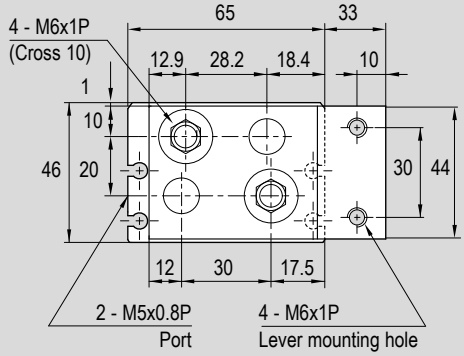

Type: **..B**
Ø 25

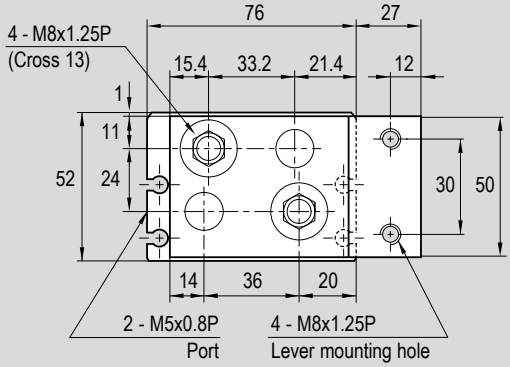

Type: **..B**
Ø 32

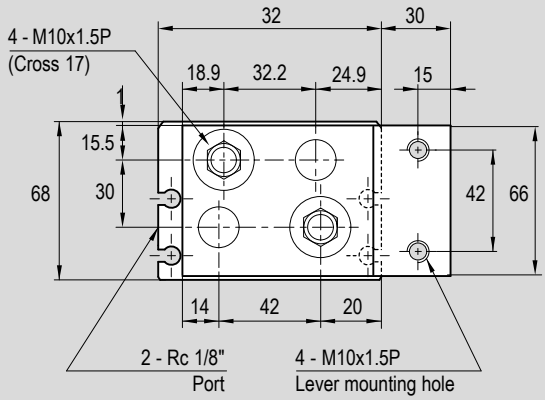

Type: **..B**
Ø 40

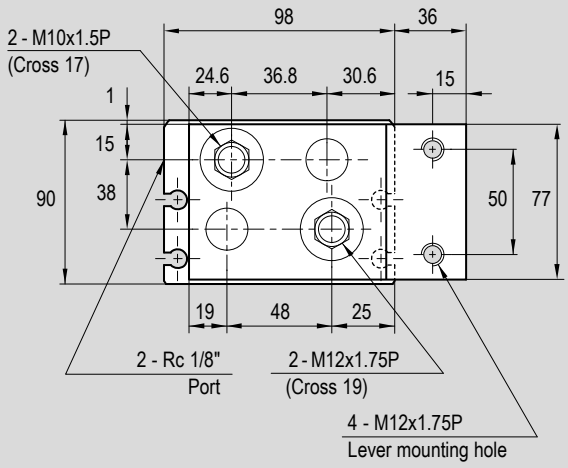

Main features

16 ÷ 100

Bores Ø

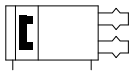

Double acting
Magnetic
3 Fingers

PPE

Type



Technical data

Bore Ø mm		16	20	25	32	40	50	63	80	100
Fluid		Compressed filtered air.								
Lubrication		Not required								
Pressure range		3 ÷ 7 bar								
Temperature range		0°C ÷ +60°C								
Lever open/close stroke		4 mm		6 mm	8 mm		12 mm	16 mm	20 mm	24 mm
Maximum operation frequency		120/min.			60/min.				30/min.	
Ports	Side	M3		M5					1/8"	1/4"
	End cover	-			M5					1/8"
Effective gripping force (N)	Open	21,0	37,0	63,0	111,0	177,0	280,0	502,0	710,0	1.068,0
	Close	23,0	42,0	71,0	123,0	195,0	306,0	537,0	748,0	1.111,0
Weight (g)		60	98	146	295	378	561	1.032	1.768	3.224

Codes

Function	**PPE** Bore Ø mm								
	16	20	25	32	40	50	63	80	100
Double acting	170673	170674	075053	075054	075055	075056	075057	170675	170676

Standard dimensions

Type: **PPE**
Ø 16

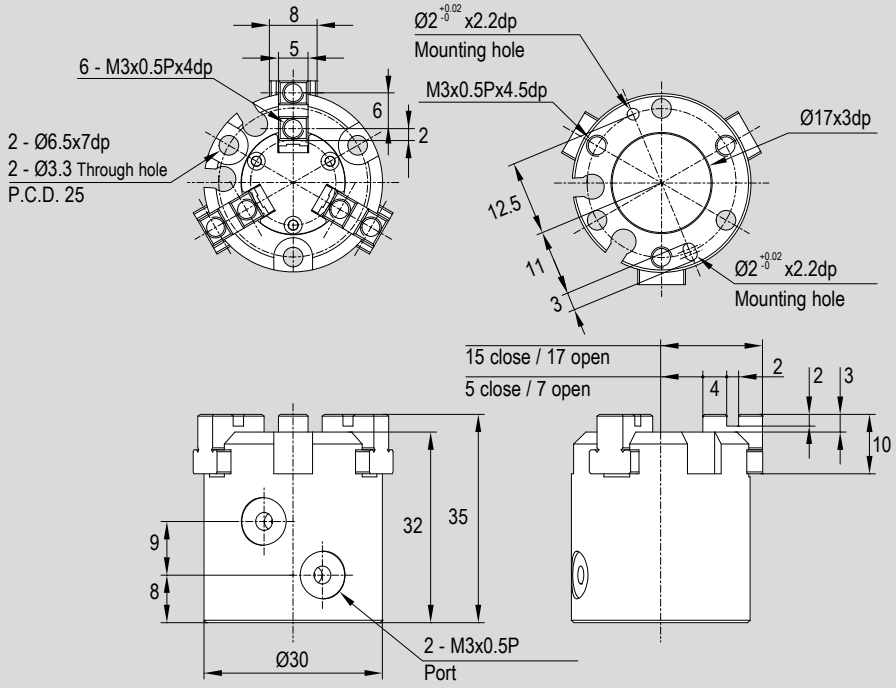

Type: **PPE**
Ø 20

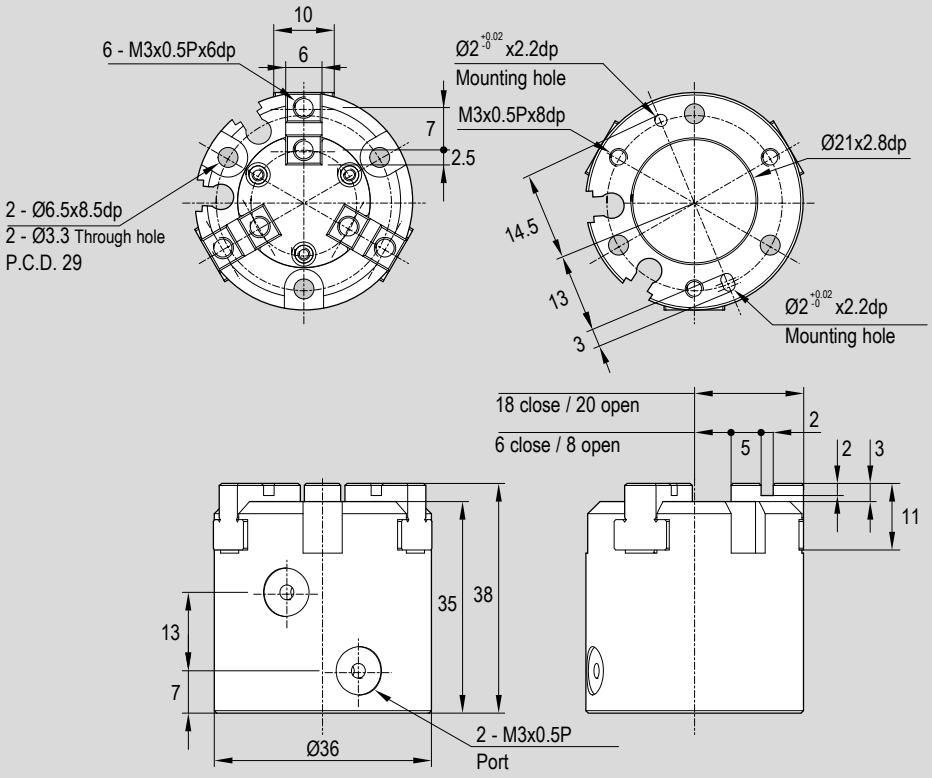

Standard dimensions

Type: **PPE**
Ø 25

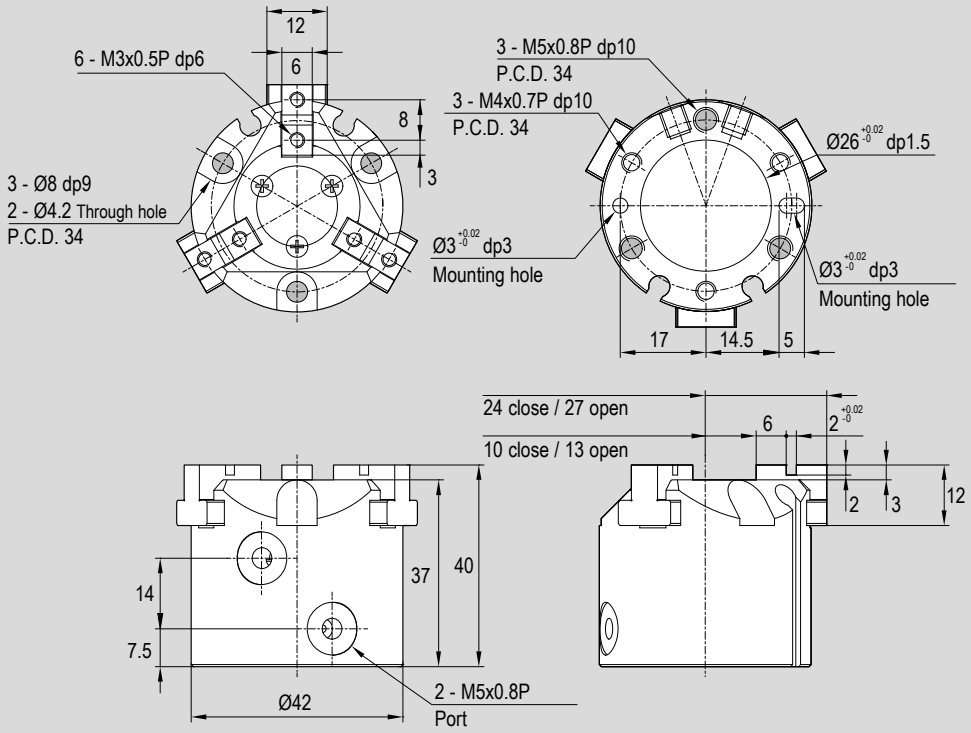

Type: **PPE**
Ø 32

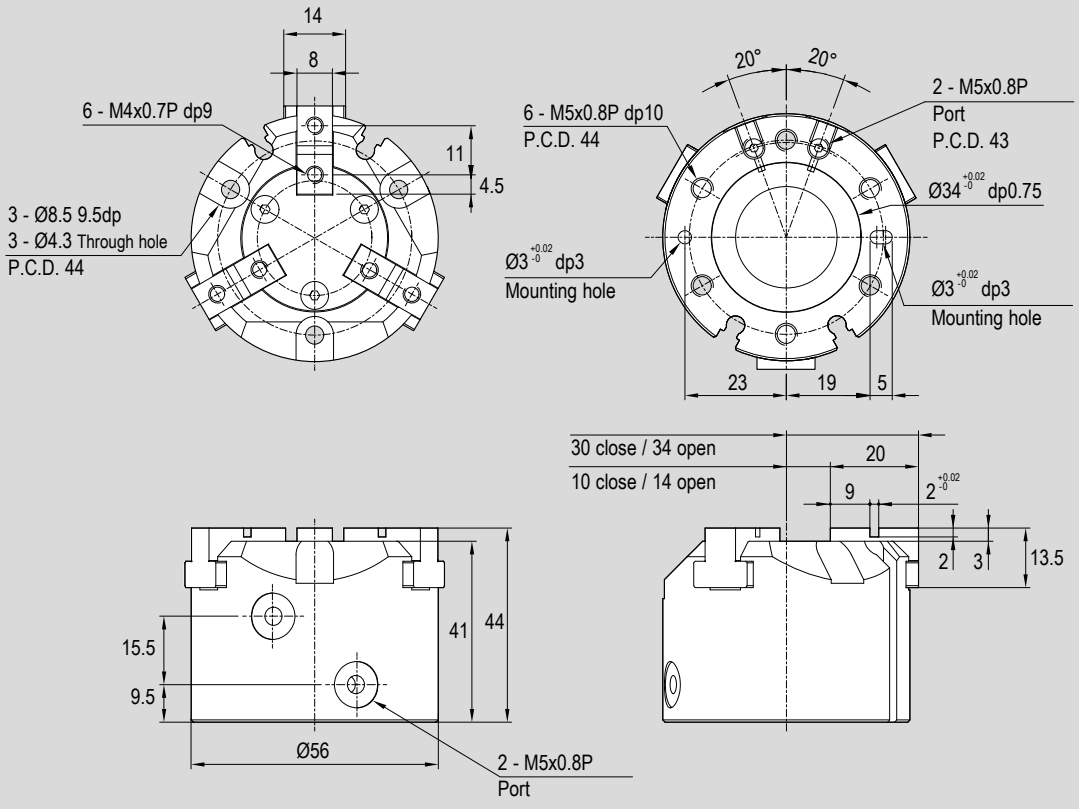

Standard dimensions

Type: **PPE**
Ø 40

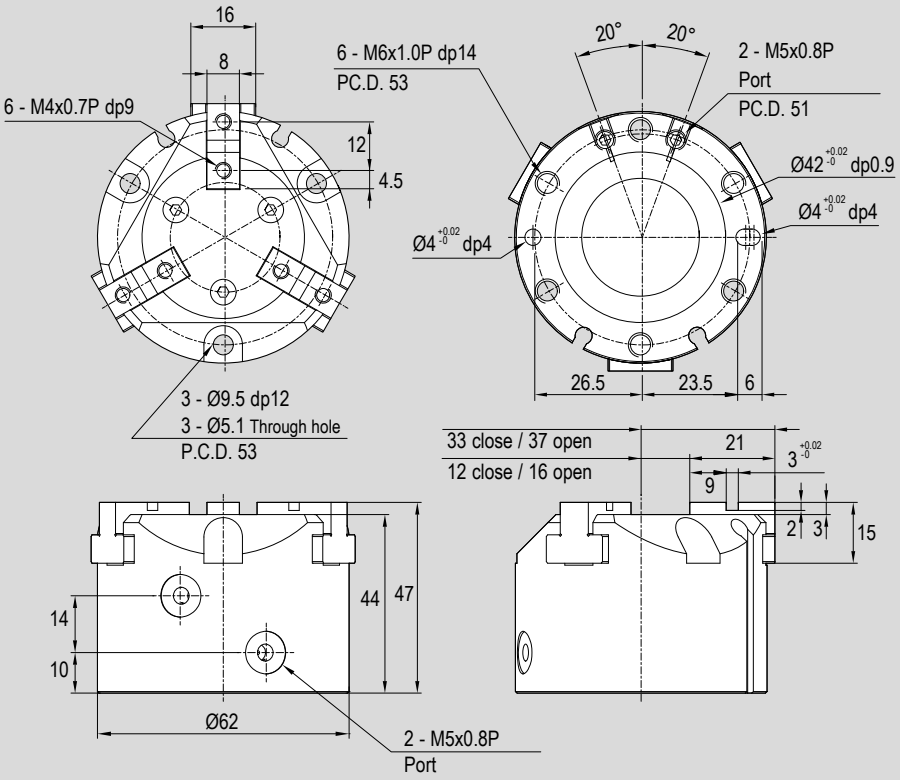

Type: **PPE**
Ø 50

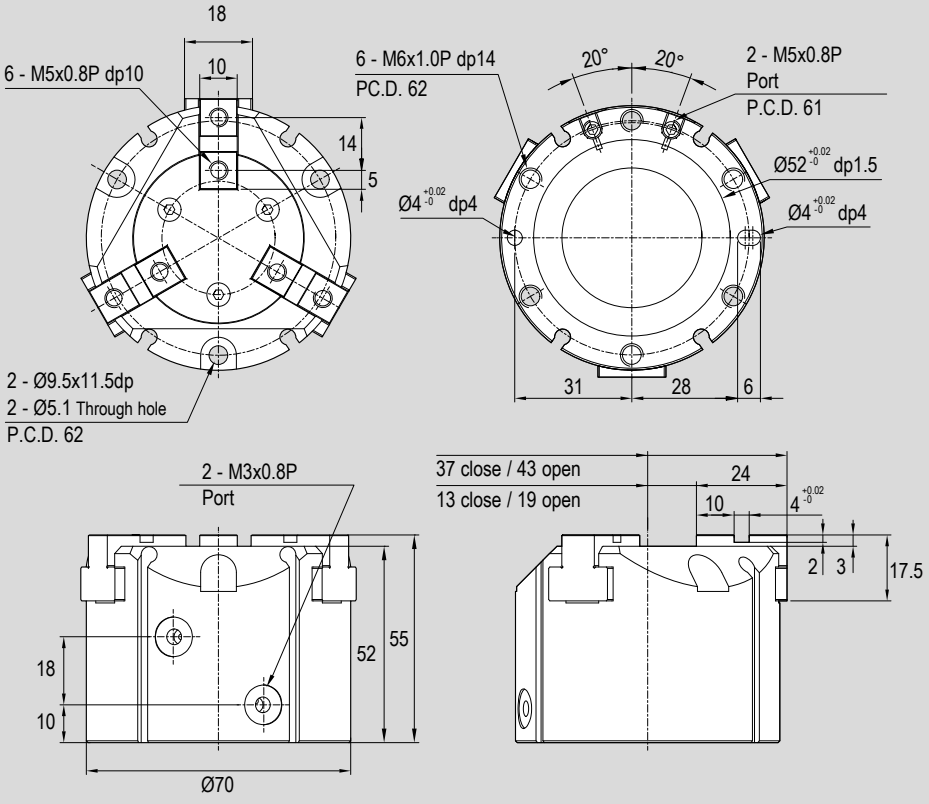

Standard dimensions

Type: **PPE**
Ø 63

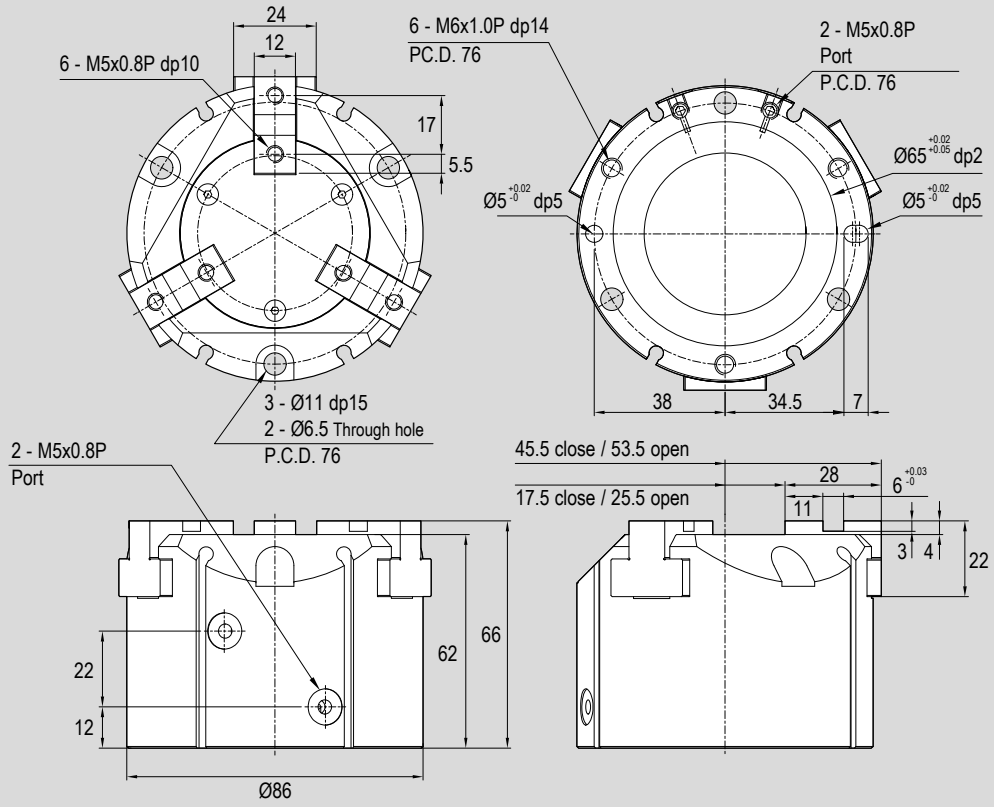

Type: **PPE**
Ø 80

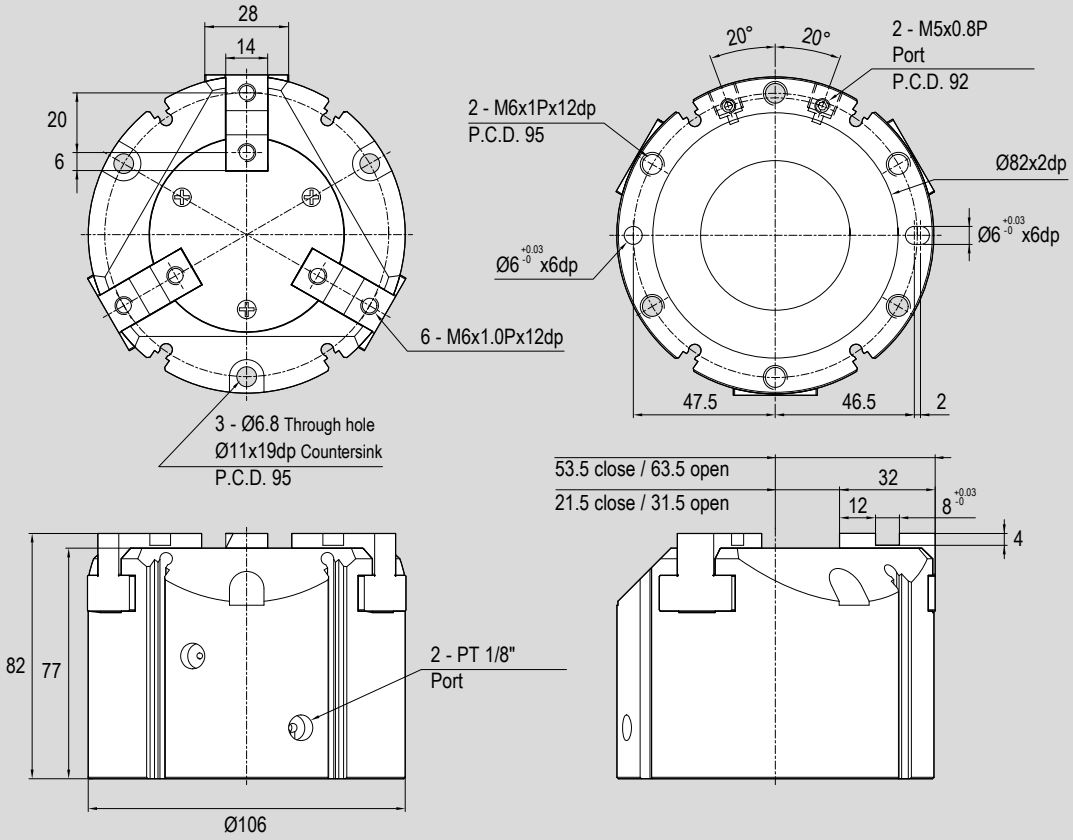

Standard dimensions

Type: **PPE**
Ø 100

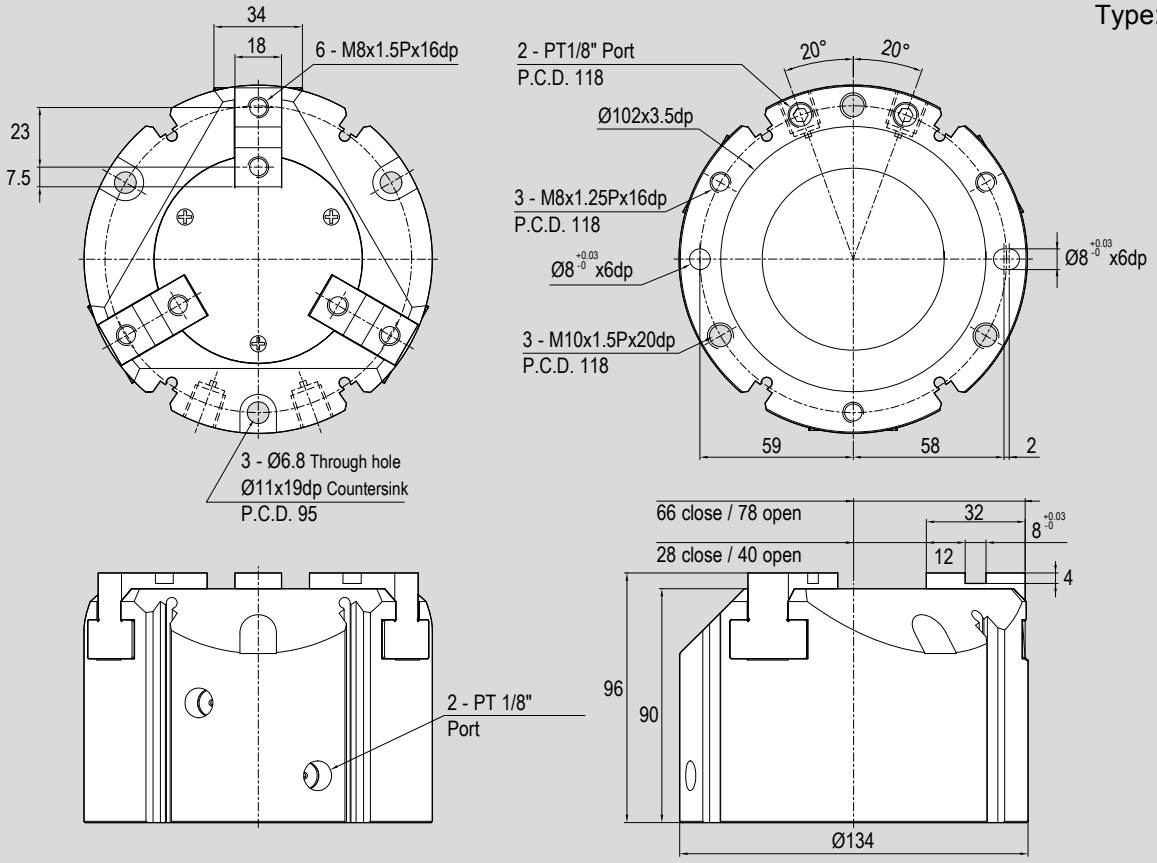

Male mounting for hand grips ..PM



For cylinder Ø mm	Code	Item	Matching
10	170655	10PM	PAB PAC PPB
12	170665	12PM	
16	075058	16PM	
20	075059	20PM	
25	075064	25PM	
32	075065	32PM	

Female mounting for hand grips ..PF

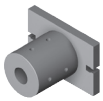

For cylinder Ø mm	Code	Item	Matching
10	170656	10PF	PAB PAC PPB PPC
12	170666	12PF	
16	075066	16PF	
20	075067	20PF	
25	075068	25PF	
32	075069	32PF	

Plate for 3 fingers hand grips ..PTD

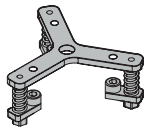

For cylinder Ø mm	Code	Item	Matching
25	170657	25PTD	PPE
32	170658	32PTD	
40	170659	40PTD	
50	170660	50PTD	
63	170661	63PTD	
80	170662	80PTD	
100	170663	100PTD	

Magnetic reed switch C groove ASC..



For cylinder Ø mm	Code	Item	Matching
6 ÷ 100	070248	ASC1C525	PAB - PAC PPB - PPC PPD - PPE
	070249	ASC7N2M8	
	070382	ASC7M2M8	

Notes

SLIDE UNITS
for Cylinders

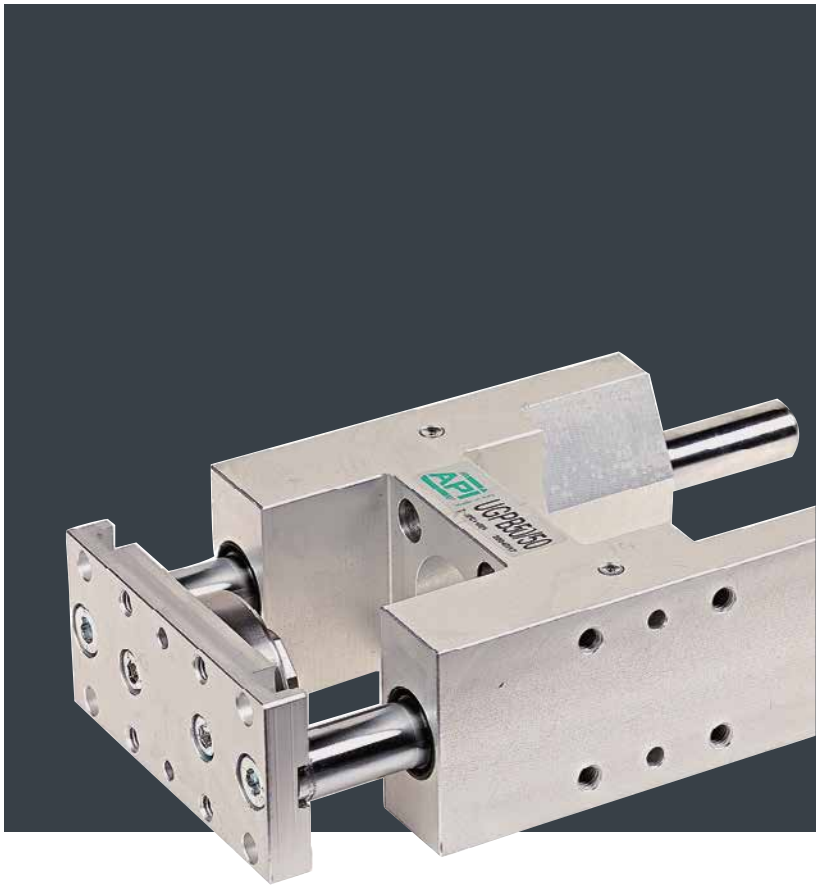

Find out our
key products

- **Solution for most applications**
- **Easy and intuitive choice**
- **Excellent value for money**
- **Wide availability**
- **Fast delivery**

Features and certifications

Series of linear slide units for cylinders conformig to standard ISO 6432 and ISO 15552 possible to be fixed on four sides. These component are used with heavy loads to guarantee a better linearity of movement and an higher precision. Sometimes can be used as anti-rotating devices too. Available in three types with different features. The versions with spherical bearing slides better, but they can support lower loads than the versions with sintered bronze bushings. U-shaped versions, on the other hand, can support lower loads than the H-shaped.
Supplied as standard in compliance with Reach and RoHS directives. On request they also can be supplied according to 2014/34/EU ATEX Directive.

Slide Units for Cylinders ISO 6432 type UGLB — from page 1.70.10



U-shaped linear slide units with sintered bronze bushings, for cylinders ISO 6432, possible to be fixed on four sides. These component are used with heavy loads to guarantee a better linearity of movement and an higher precision. Sometimes can be used as anti-rotating devices too.
On request they also can be supplied according to ATEX Directive.

Slide Units for Cylinders ISO 6432 type UGPB — from page 1.70.10



H-shaped linear slide units with sintered bronze bushings, for cylinders ISO 6432, possible to be fixed on four sides. These component are used with heavy loads to guarantee a better linearity of movement and an higher precision. Sometimes can be used as anti-rotating devices too.
On request they also can be supplied according to ATEX Directive.

Slide Units for Cylinders ISO 6432 type UGPS — from page 1.70.10



H-shaped linear slide units with spherical bearings, for cylinders ISO 6432, possible to be fixed on four sides. These component are used with heavy loads to guarantee a better linearity of movement and an higher precision. Sometimes can be used as anti-rotating devices too.

Slide Units for Cylinders ISO 15552 type UGLB — from page 1.70.20



U-shaped linear slide units with sintered bronze bushings, for cylinders ISO 15552, possible to be fixed on four sides. These component are used with heavy loads to guarantee a better linearity of movement and an higher precision. Sometimes can be used as anti-rotating devices too.
On request they also can be supplied according to ATEX Directive.

Slide Units for Cylinders ISO 15552 type UGPB — from page 1.70.20



H-shaped linear slide units with sintered bronze bushings, for cylinders ISO 15552, possible to be fixed on four sides. These component are used with heavy loads to guarantee a better linearity of movement and an higher precision. Sometimes can be used as anti-rotating devices too.
On request they also can be supplied according to ATEX Directive.

Slide Units for Cylinders ISO 15552 type UGPS — from page 1.70.20



H-shaped linear slide units with spherical bearings, for cylinders ISO 15552, possible to be fixed on four sides. These component are used with heavy loads to guarantee a better linearity of movement and an higher precision. Sometimes can be used as anti-rotating devices too.

Options

Description	Suffix
AISI 304 Stainless Steel rods (only for type UGLB and UGPB)	**K**
ATEX version on request (only for type UGLB and UGPB, option K required)	**/ATEX**
Special versions on request	**/S**

The options, when this is possible, can be combined with each other. For options matching and code key, see the tables below.

Options matching

Series	Bore	Model	Standard options matching	
			K	**/ATEX**(1)
UGLB - UGPB	Ø 12 ÷ 100	Standard	●	●
		Stainless Steel Rods (K)		●
UGPS	Ø 12 ÷ 100	Standard	-	-

Key

● allowed matching; - not allowed matching

(1) For **/ATEX** versions, Stainless Steel Rod (option **K**) is required

Code key

Type	Cylinder bore	/	Cylinder stroke	Options	/	ATEX versions	Special versions
UGPB	**20**	**/**	**200**	**K**	**/**		

Type	Cylinder bore	Cylinder stroke	Options	ATEX versions	Special versions
UGLB UGPB UGPS	Ø 12, 16, 20, 25 Slide Units for Cylinders ISO 6432 Ø 32, 40, 50, 63, 80, 100 Slide Units for Cylinders ISO 15552	10 mm ÷ 2500 mm Stroke max. 1000 mm (Slide Unit for cylinders ISO 6432) Stroke max. 2500 mm (Slide Unit for cylinders ISO 15552)	K* * Only for type UGLB - UGPB	ATEX* CE Ex II 2G Ex h IIC T5 Gb II 2D Ex h IIIC T100°C Db	S

How to order

Type	Cylinder bore		Cylinder stroke	Options
UGPB	**20**	**/**	**200**	**K**

Notes

For further information on options and their matching, see tables above.

For further information on the ATEX 2014/34/EU Directive, on classifications and protections, see from page III.1

Standard materials

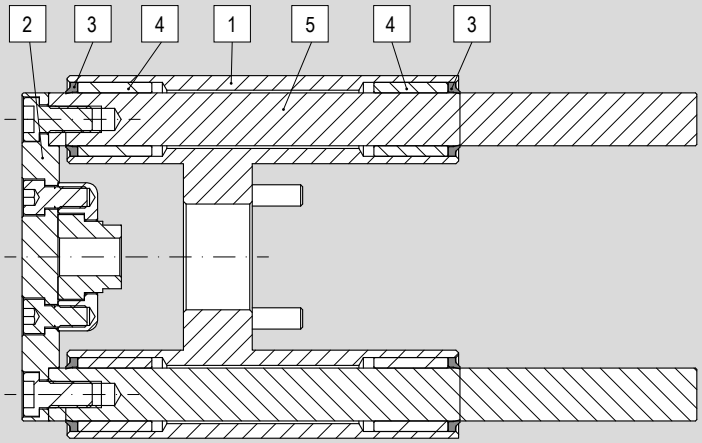

Position	Description	Materials		
		UGLB	UGPB	UGPS
1	Body	Anodised aluminium		
2	Plate	Anodised aluminium		
3	Seals	Polyurethane (PU)		
4	Bushings	Sintered bronze		Spherical bearings
5	Rods	Chrome-plated C45 steel		Hardened and chrome-plated CF51 Steel

Accessories

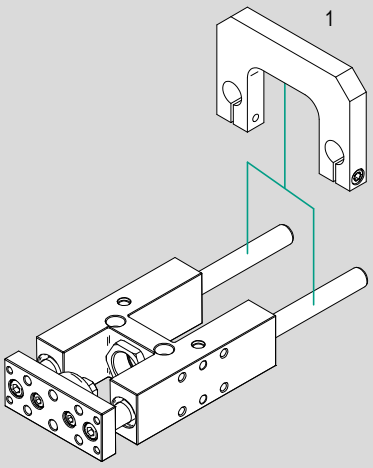

N.	Slide Unit bore	Item	Description	Matching			Code page	Data sheet page
				UGLB	UGPB	UGPS		
1	Ø 32 ÷ 100	SCSG	Connecting bracket for rods	●	●	●	1.70.50	1.100.400

Key

● allowed matching; - not allowed matching

Main features

12 ÷ 25
Bores Ø

UGLB
Type



12 ÷ 25
Bores Ø

UGPB
Type



12 ÷ 25
Bores Ø

UGPS
Type



Technical data

Type	UGLB	UGPB	UGPS
Description	U-shaped (for light loads) with sintered bronze bushings	H-shaped (for heavy loads) with sintered bronze bushings	H-shaped (for heavy loads) with spherical bearings
Bores	Ø 12 ÷ Ø 25		
Strokes	10 ÷ 1000 mm		
Temperature	-20°C ÷ +70°C		

Standard strokes

	UGLB Bore Ø mm			
Stroke mm	12	16	20	25
10				
25				
50				
80				
100				
125				
160				
200				
250				
320				
400				
500				

	UGPB - UGPS Bore Ø mm			
Stroke mm	12	16	20	25
10				
25				
50				
80				
100				
125				
160				
200				
250				
320				
400				
500				

Key
Standard stroke

Standard dimensions

Type: **UGLB**
Ø 12 ÷ 16

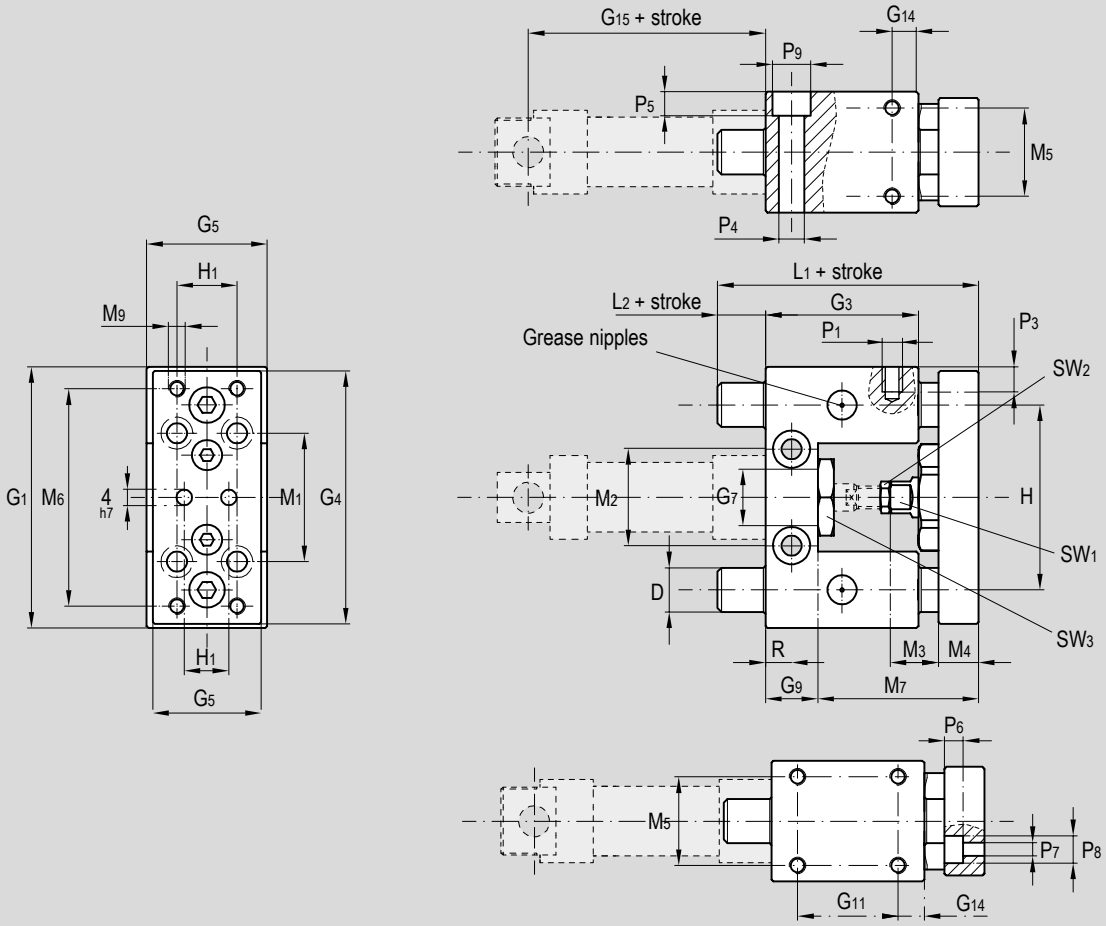

Ø (mm)	D	G_1	G_2	G_3	G_4	G_5	G_7	G_9	G_{11}	G_{14}	G_{15}	H	H_1	L_1	L_2	M_1	M_2	M_3
12	10	65	30	38	63	27	16	13	25	6,5	53	46	32	74	10	32	24	12
16	10	65	30	38	63	27	16	13	25	6,5	60	46	32	74	10	32	24	12

Ø (mm)	M_4	M_5	M_6	M_7	M_9	P_1	P_2	P_3	P_4	P_5	P_6	P_7	P_8	P_9	R	SW_1	SW_2	SW_3
12	10	22	54	51	M4	M4	15	8	5,2	5,5	4,5	4,5	7	8,5	6,5	8	10	19
16	12	22	54	51	M4	M4	15	8	5,2	5,5	4,5	4,5	7	8,5	6,5	8	10	19

Standard dimensions

Type: **UGLB**
Ø 20 ÷ 25

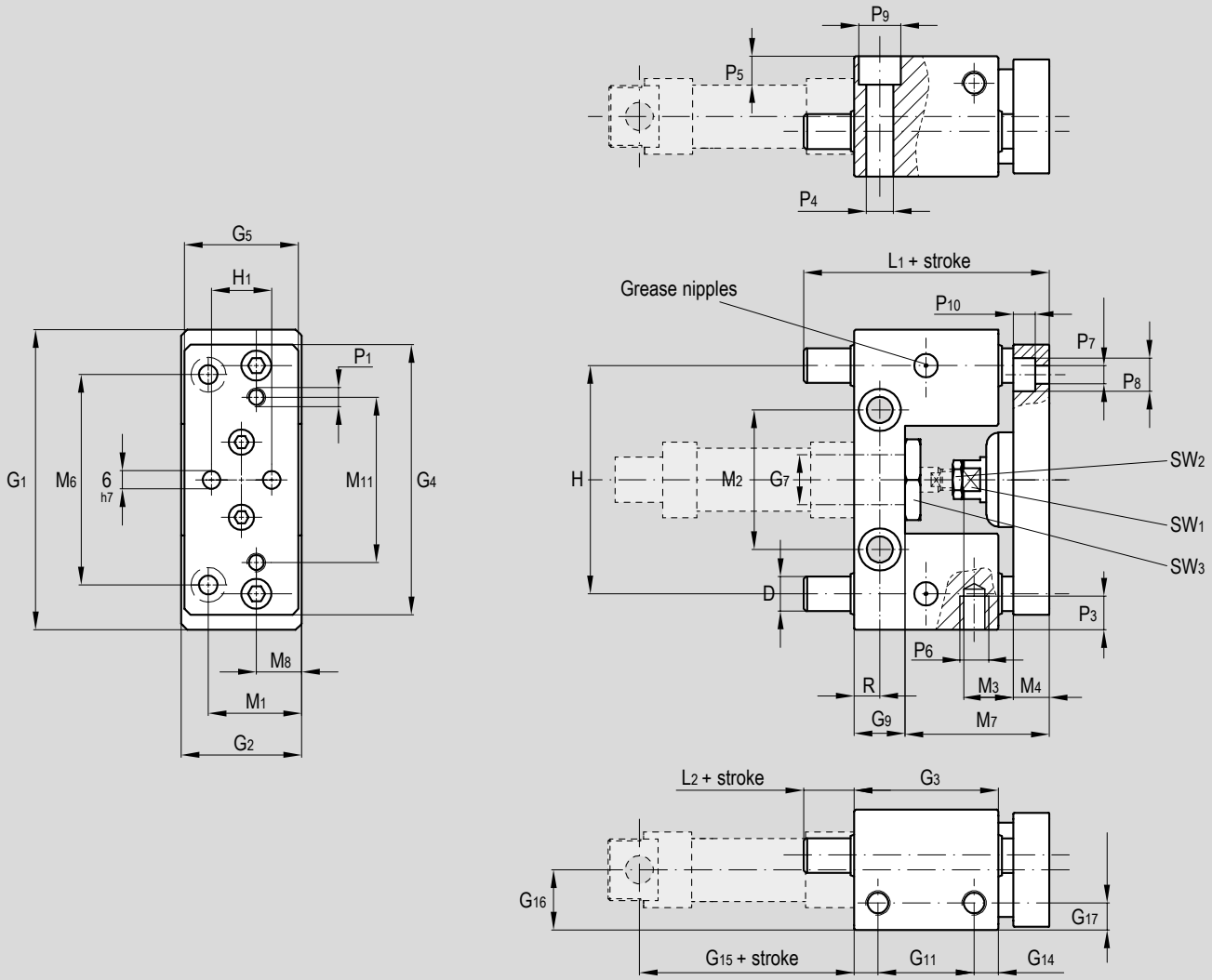

Ø (mm)	D	G_1	G_2	G_3	G_4	G_5	$ØG_7$	G_9	G_{11}	G_{14}	G_{15}	G_{16}	G_{17}	H	H_1	R	M_1	M_2	M_3
20	12	100	40	48	90	38	22	17	32	8	71	24	10	76	20	8,5	30	46,5	19
25	12	100	40	48	90	38	22	17	32	8	76	24	10	76	20	8,5	30	46,5	19

Ø (mm)	M_4	M_6	M_7	M_8	M_{11}	L_1	L_2	$ØP_1$	P_3	$ØP_4$	P_5	$ØP_6$	$ØP_7$	$ØP_8$	$ØP_9$	P_{10}	SW_1	SW_2	SW_3
20	12	70	48	15	55	75	12	M6	15	9	9	M8	6,5	11	14	7	13	13	27
25	12	70	54	15	55	83	12	M6	15	9	9	M8	6,5	11	14	7	13	17	27

Standard dimensions

Type: **UGPB, UGPS**

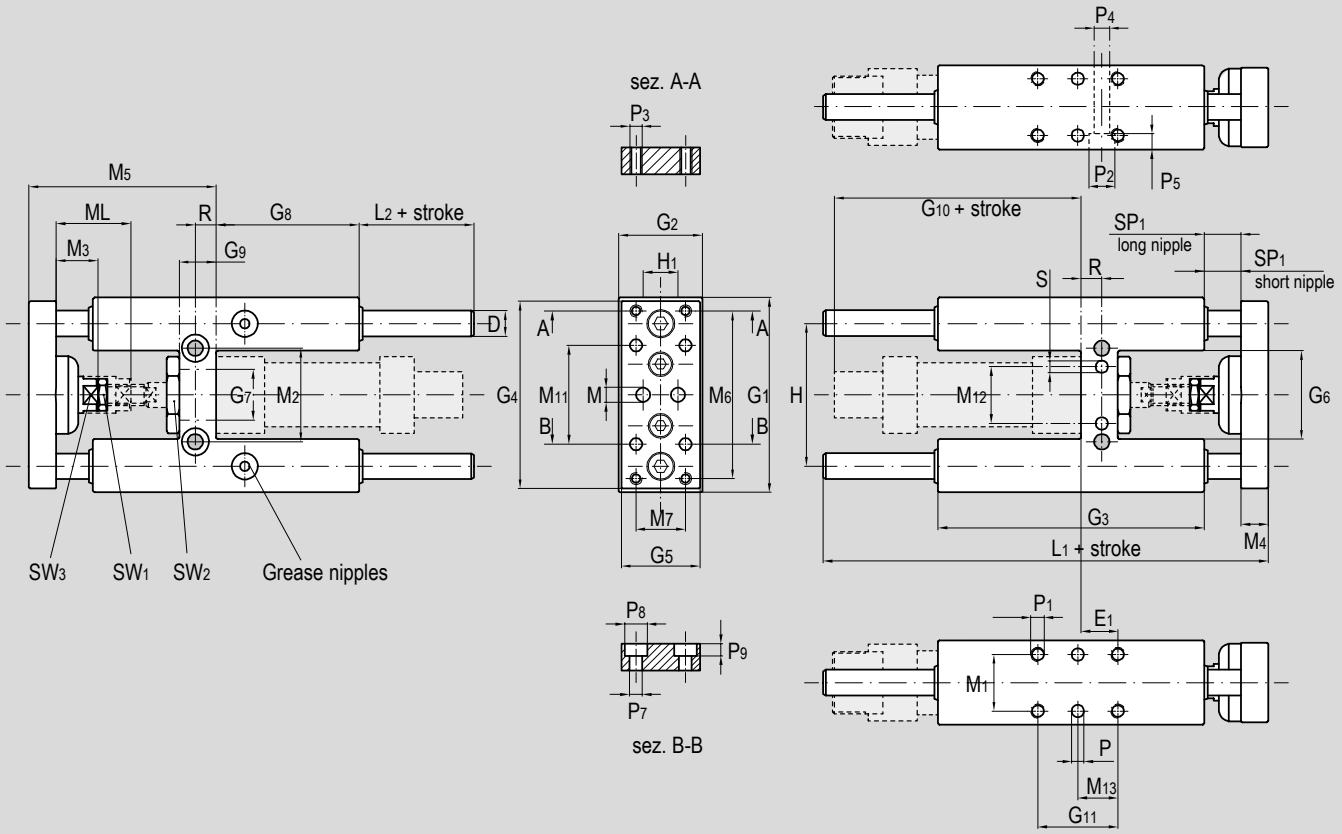

Ø (mm)	D	E_1	G_1	G_2	G_3	G_4	G_5	G_6	G_7	G_8	G_9	G_{10}	G_{11}	H	H_1	L_1	L_2	M_1	M_2	M_3	M_4	M_5	M_6
12	10	11	65	30	75	63	27	27	16	37	13	66	32,5	46	15	125	37	22	24	12	10	51	54
16	10	11	65	30	75	63	27	27	16	37	13	71	32,5	46	15	125	37	22	24	12	10	51	54
20	12	15	79	34	108	76	32	36	22	58	15	87	32,5	58	20	160	37	23	38	18	12	65	68
25	12	15	79	34	108	76	32	36	22	58	15	90	32,5	58	20	160	37	23	38	18	12	65	68

Ø (mm)	M_7	M h7	M_{11}	M_{12}	M_{13}	ML	P_1	P_2	P_3	P_4	P_5	P_7	P_8	P_9	P h7	S h7	R	SP	SP_1	SW_1	SW_2	SW_3
12	15	4	32	/	16,25	/	M4	8,5	M4	5,5	5,5	4,5	7	4,5	-	-	6,5	3	3	10	19	8
16	15	4	32	/	16,25	/	M4	8,5	M4	5,5	5,5	4,5	7	4,5	-	-	6,5	3	3	10	19	8
20	20	6	40	23	16,25	40	M6	10,5	M5	6,5	7	5,5	9	6	5	5	8,5	3	22	13	27	13
25	20	6	40	23	16,25	40	M6	10,5	M5	6,5	7	5,5	9	6	5	5	8,5	3	22	17	27	13

Allowed load

Type: **UGLB**

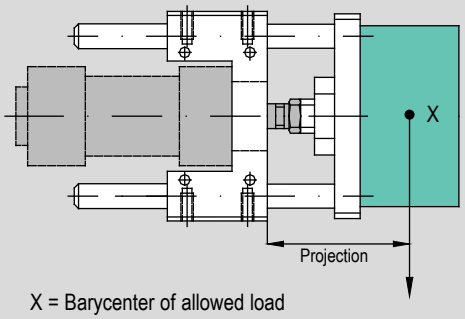

X = Barycenter of allowed load

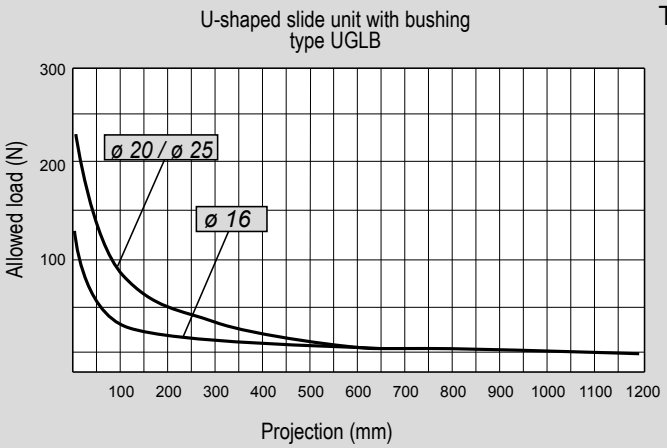

Type: **UGPB**

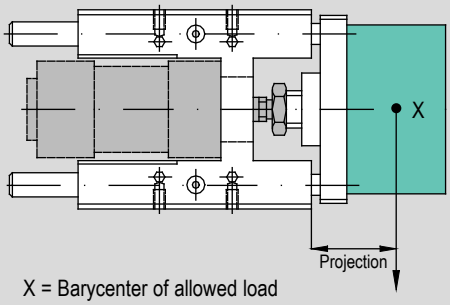

X = Barycenter of allowed load

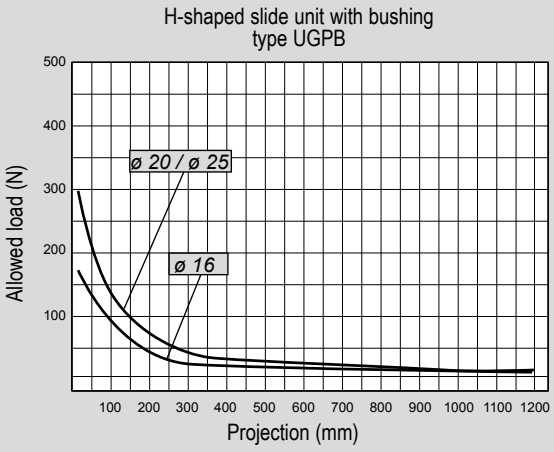

Type: **UGPS**

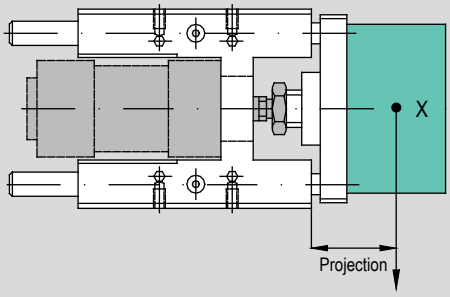

X = Barycenter of allowed load

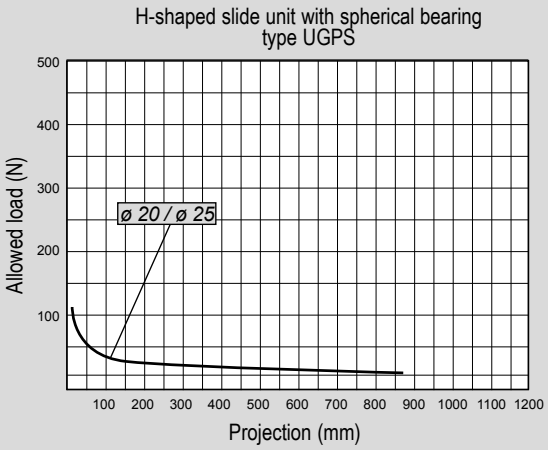

Main features

32 ÷ 100
Bores Ø

UGLB
Type



32 ÷ 100
Bores Ø

UGPB
Type



32 ÷ 100
Bores Ø

UGPS
Type



Technical data

Type	UGLB	UGPB	UGPS
Description	U-shaped (for light loads) with sintered bronze bushings	H-shaped (for heavy loads) with sintered bronze bushings	H-shaped (for heavy loads) with spherical bearings
Bores	Ø 32 ÷ Ø 100		
Strokes	10 ÷2800 mm		
Temperature	-20°C ÷ +80°C		

Standard strokes

	UGLB Bore Ø mm					
Stroke mm	32	40	50	63	80	100
25						
50						
80						
100						
125						
160						
200						
250						
300						
320						
400						
500						

	UGPB - UGPS Bore Ø mm					
Stroke mm	32	40	50	63	80	100
25						
50						
80						
100						
125						
160						
200						
250						
300						
320						
400						
500						

Key
Standard stroke

Standard dimensions

Type: **UGLB**

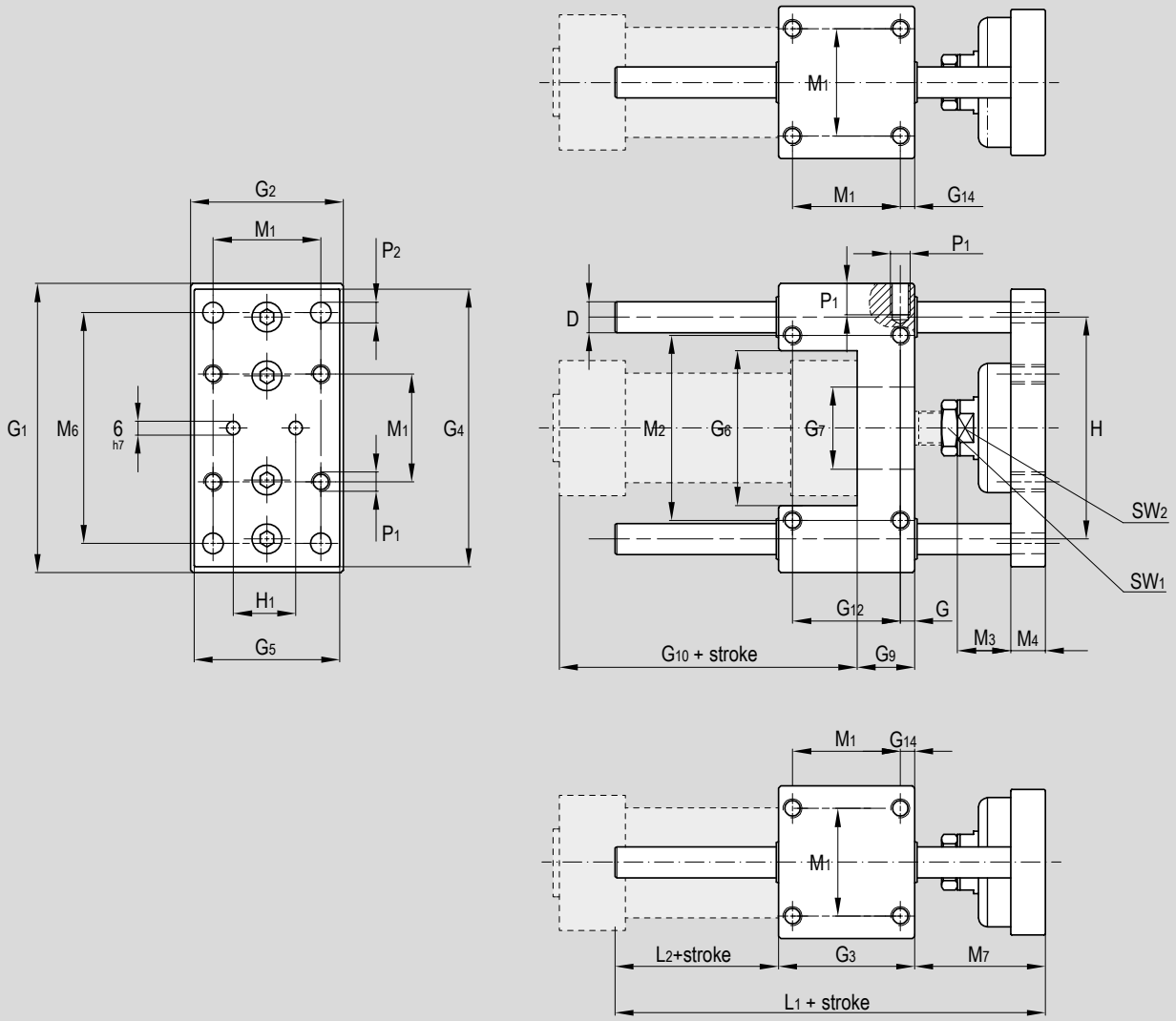

Ø (mm)	D	G	G_1	G_2	G_3	G_4	G_5	G_6	$ØG_7$	G_9	G_{10}	G_{12}	G_{14}	H	H_1	M_1	M_2	M_3	M_4	M_6	M_7	L_1	L_2	$ØP_1$	P_2	P_3	SW_1	SW_2
32	12	7,8	100	48	48	95	45	48	30	17	94	32,5	7,8	74	31	32,5	58	23	11	78	46	108	14	M6	6,5	12	15	17
40	12	10	106	56	58	101	53	64	35	21	105	38	10	80	36	38	64	23	15	84	52	120	10	M6	6,5	12	15	17
50	16	6,3	125	66	59	120	63	67	40	25	106	46,5	6,3	96	45	46,5	80	24	15	100	65	130	6	M8	8,5	15	22	24
63	16	9,8	132	76	76	127	73	76	45	25	121	56,5	9,8	104	45	56,5	95	24	15	105	65	145	4	M8	8,5	15	22	24
80	20	20	165	98	90	160	95	97	45	34	128	50	9	130	56	72	130	30	16	130	71	170	9	M10	11	18	27	27
100	20	20	185	118	110	180	115	117	55	39	138	70	10,5	150	56	89	150	30	18	150	71	190	9	M10	11	18	27	27

Standard dimensions

Type: **UGPB, UGPS**

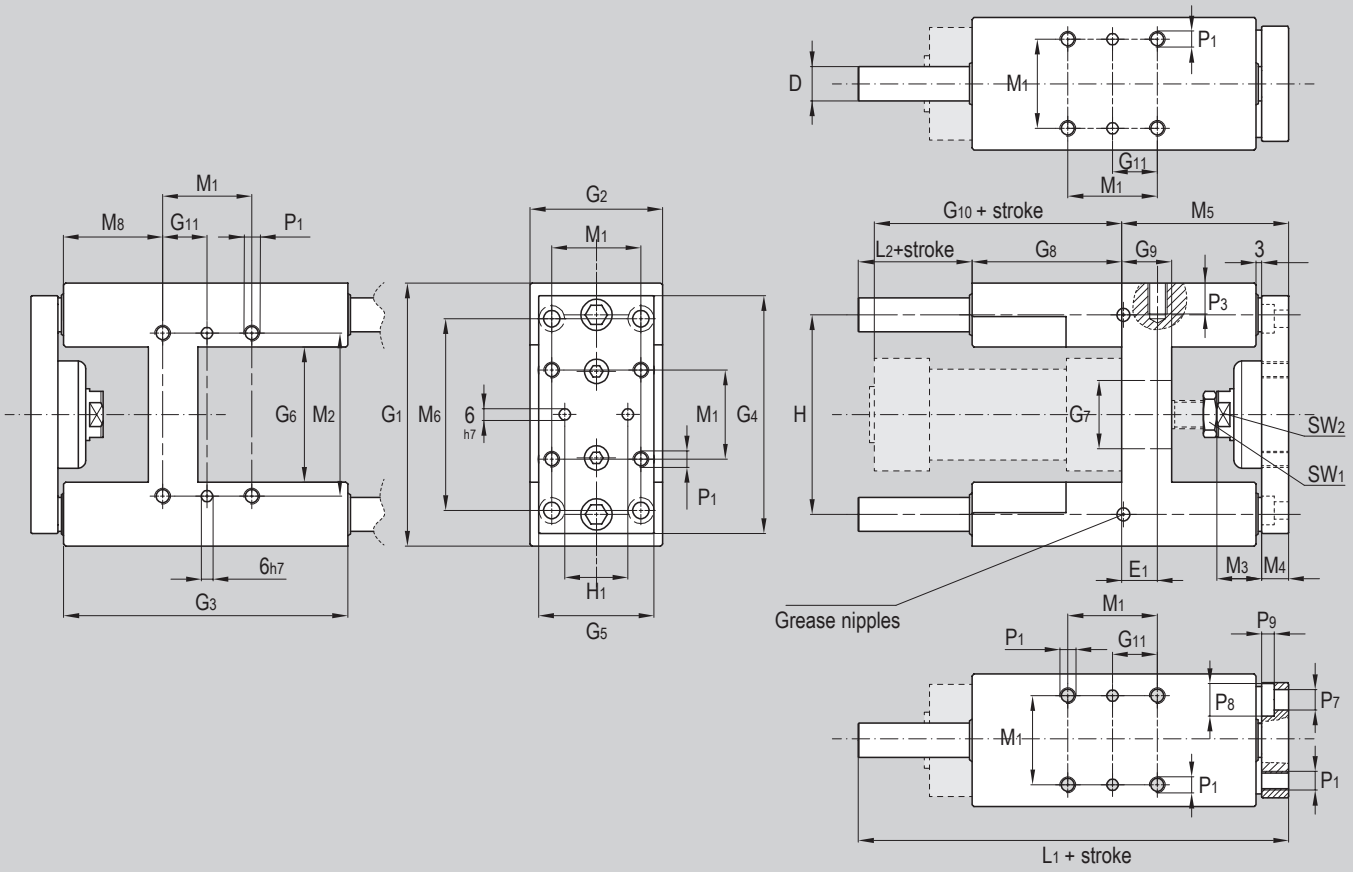

Ø (mm)	D	E_1	G_1	G_2	G_3	G_4	G_5	G_6	$ØG_7$	G_8	G_9	G_{10}	G_{11}	H	H_1	M_1	M_2	M_3	M_4	M_5	M_6	M_8	L_1	L_2	$ØP_1$	P_3	$ØP_7$	$ØP_8$	P_9	SW_1	SW_2
32	12	4,3	97	49	125	90	45	50,2	30	76	17	94	16,25	74	31	32,5	61	23	11	63	78	44,5	177	38	M6	10	6,5	10,5	6,5	15	17
40	16	11	115	58	139	110	54	58,2	35	81	21	105	19	87	36	38	69	23	15	76	84	47	192	35	M6	10	6,5	10,5	6,5	15	17
50	20	18,8	137	69	148	124	60	70,2	40	78	26	106	23,25	104	45	46,5	85	24	15	88	100	51,5	205	39	M8	16	8,5	13,5	9	22	24
63	20	15,3	152	85	178	145	79	85,2	45	107	26	121	28,25	119	45	56,5	100	24	15	89	105	55,7	237	41	M8	16	8,5	13,5	9	22	24
80	25	21	189	105	215	180	99	106	45	128	34	128	36	148	56	72	130	30	20	110	130	66	280	42	M10	18	11	18	11	27	27
100	25	24,5	213	129	220	200	120	131	55	128	39	138	44,5	172	56	89	150	30	20	115	150	67,5	280	37	M10	18	11	18	11	27	27

Allowed load

Type: **UGLB**

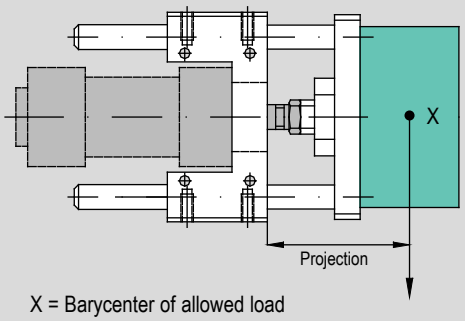

X = Barycenter of allowed load

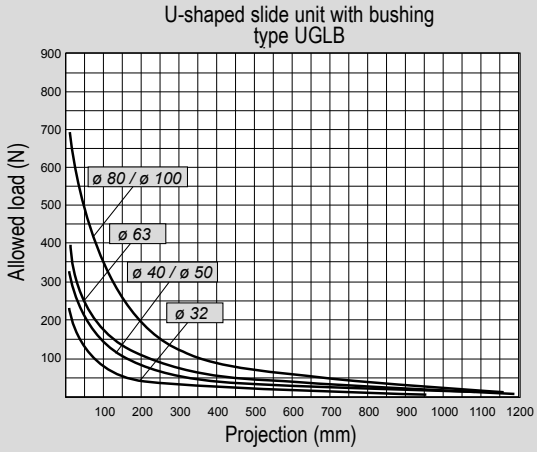

Type: **UGPB**

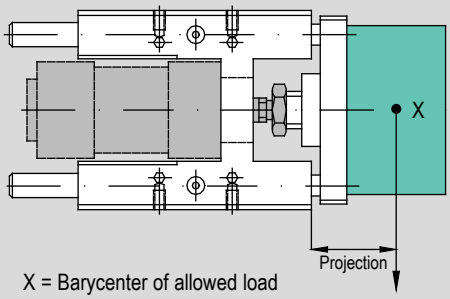

X = Barycenter of allowed load

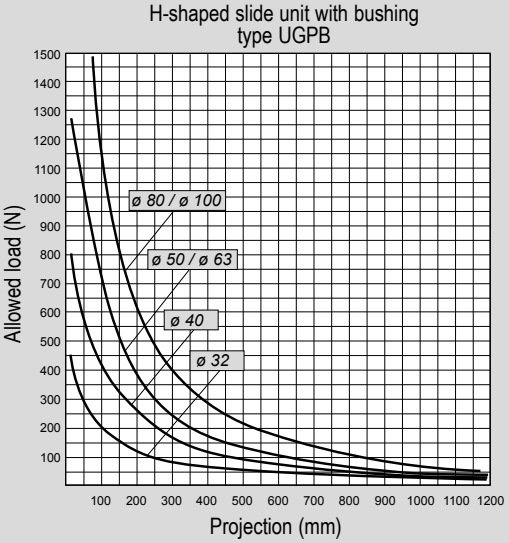

Type: **UGPS**

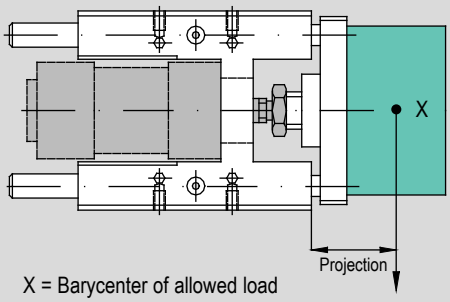

X = Barycenter of allowed load

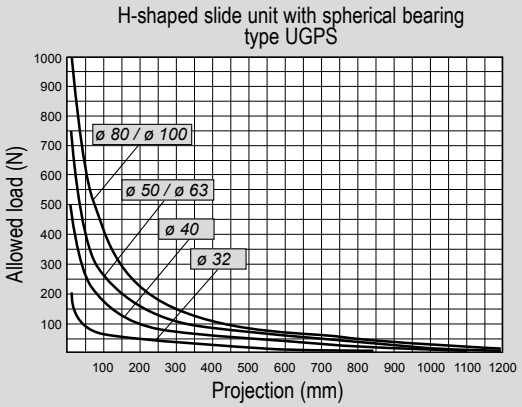

Connecting bracket for rods



Per unità di guida Ø mm	Code	Item	Compliance
32	077901	SCSG032	-
40	077902	SCSG040	
50	077903	SCSG050	
63	077904	SCSG063	
80	077905	SCSG080	
100	077906	SCSG100	

PISTON ROD-BRAKE
for Cylinders



Find out our
key products

- **Solution for most applications**
- **Easy and intuitive choice**
- **Excellent value for money**
- **Wide availability**
- **Fast delivery**

Features and certifications

Series of piston rod-brake for cylinders conforming to standard ISO 6432 and ISO 15552, suitable for blocking the rod of the cylinder in the event of a pressure lack or pressure drop to the cylinder, or in those cases where a stop is necessary for a processing or handling.
Supplied as standard in compliance with Reach and RoHS directives.

Static piston rod-brake for cylinders ISO 6432

from page 1.75.10



Static piston rod-brake for cylinders conforming to standard ISO 6432. Can be supplied normally closed or normally open.
The clamping forces are suitable for cylinder working pressure up to 8 bar and act in both directions. For the application of the piston rod-brake type ABS to a cylinder ISO 6432, the actuator must be ordered with the rod predisposed for this (extended rod in hardened and chrome plated steel, option B).

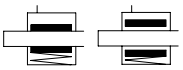

Static piston rod-brake for cylinders ISO 15552

from page 1.75.20



Static piston rod-brake for cylinders conforming to standard ISO 15552. Can be supplied normally closed or normally open.
The clamping forces are suitable for cylinder working pressure up to 8 bar and act in both directions. For the application of the piston rod-brake type ABS to a cylinder ISO 155552, the actuator must be ordered with the rod predisposed for this (extended rod in hardened and chrome plated steel, option B).

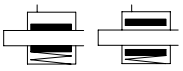

Dynamic piston rod-brake for cylinders ISO 15552

from page 1.75.40



Dynamic piston rod-brake for cylinders conforming to standard ISO 15552. Can be supplied normally closed only. The peculiarity of this type ABK is to lock the piston rod while moving and to hold it still even in presence of pressure in the chamber. The special feature of the piston-rod brake type ABK is the absolute absence of axial movement and rotation of the cylinders' piston-rod. For the application of the piston rod-brake type ABK to a cylinder ISO 155552, the actuator must be ordered with the rod predisposed for this (extended rod in hardened and chrome plated steel, option B1).



Standard options matching

Series	Bore	Model	Functions	
			Normally closed 	Normally open 
ABS..	Ø 20 ÷ 125	Standard	●	●
ABK..	Ø 32 ÷ 100	Standard	●	-

Key
● available; - not availabe.

Code key

Type	Cylinder bore	Function*
ABS	**032**	**CRD**
ABS	Ø 20, 25 Piston rod-brake ABS for cylinders ISO 6432	CRD
ABK	Ø 32, 40, 50, 63, 80, 100, 125 Piston rod-brake ABS for cylinders ISO 15552	ARD
	Ø 32, 40, 50, 63, 80, 100 Piston rod-brake ABK for cylinders ISO 15552	

* Only for type ABS

How to order type ABS

Type	Cylinder bore	Function
ABS	**032**	**CRD**

How to order type ABK

Type	Cylinder bore
ABK	**032**

Standard materials

Type: **ABS**
Ø 20 ÷ 25

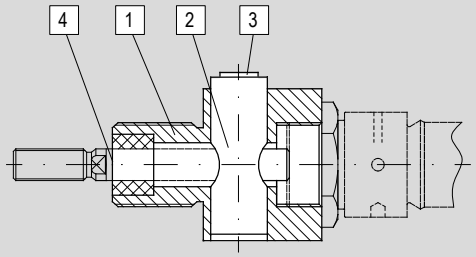

Type: **ABS**
Ø 32 ÷ 100

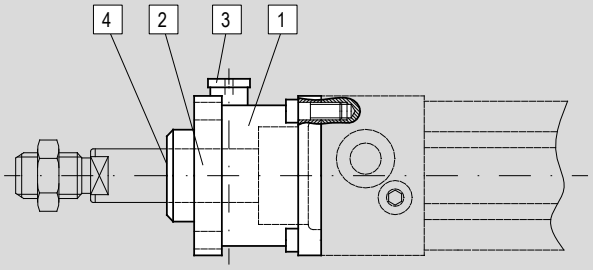

Position	Description	Materale
1	Body	Anodised aluminium
2	Jaws	Brass
3	Seals	NBR
4	Cylindrical locking device	Anodised aluminium

Type: **ABK**

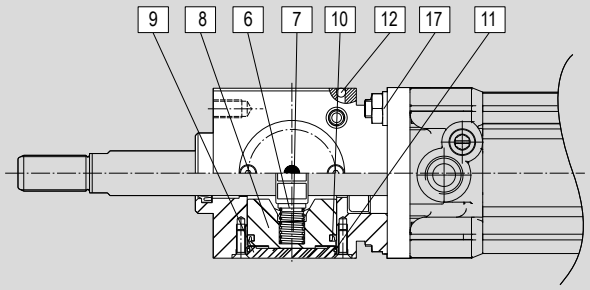

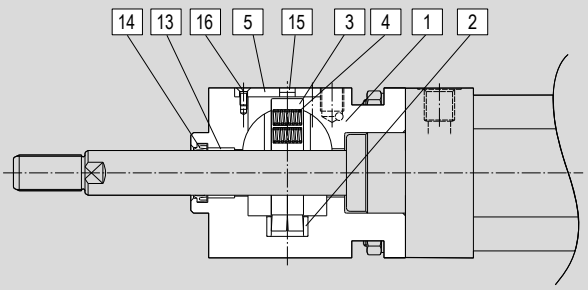

Position	Description	Materale
1	Body	Anodised aluminium
2	Bushing	Carbon steel
3	Locking unit	Brass
4	Spring	SWPA
5	Cover	Anodised aluminium
6	Locking spring	Acetalic resin (POM)
7	Spring	SWPA
8	Piston	Acetalic resin (POM)
9	Rear cover	Anodised aluminium
10	Seal	Polyurethane (PU)
11	O-ring	NBR
12	Sphere	Carbon steel
13	Bushing	Sintered bronze
14	Rod seal	NBR
15	Silencer	Brass
16	Screw	Nickel-plated carbon steel
17	Screw	Carbon steel blackening

Piston Rod-Brake for Cylinders

Staitc piston-rod brake for cylinders ISO 6432

Main features

20 ÷ 25
Bores Ø


Normally closed

ABS..CRD
Type

20 ÷ 25
Bores Ø


Normally open

ABS..ARD
Type



Technical data

Bore Ø (mm)	20	25
Fluid	Compressed filtered air with or without lubrication	
Pressure range	4 ÷ 8 bar	
Locking force (N)	300	400
Temperature range	-10°C ÷ +80°C	

Warning: working of piston rod-brake type ABS is static: before clamping is necessary to arrest the rod, is not usable for reducing the speed of the rod while moving. The locking-rod unit must only be unlocked when the pressures of both chambers of the cylinder are balanced, or the rod of the cylinder could move with non-uniform motion, causing problems to the application.
For the application of the piston rod-brake the actuator must be ordered with the rod predisposed for this (extended rod in hardened and chrome plated steel, option B).

Standard dimensions

Type: **ABS**

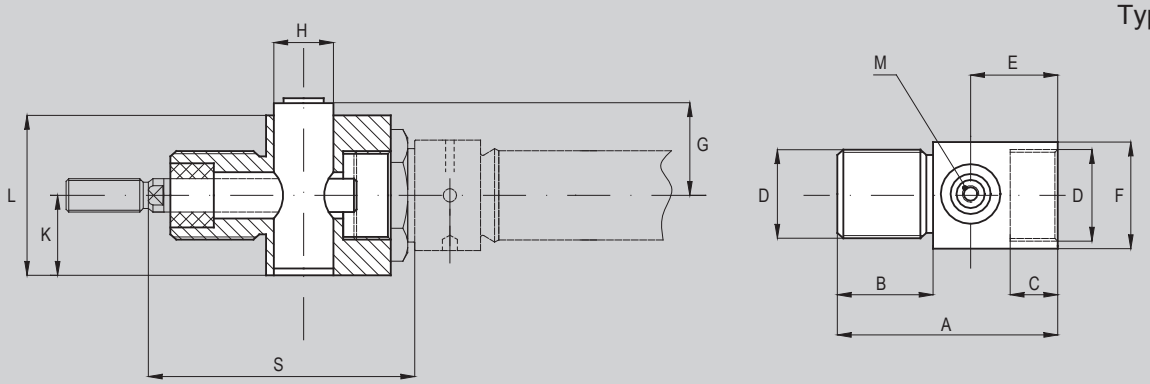

For cylinder Ø (mm)	A	B	C	E	F	G	H	K	D	L	M	S
20	58	23	12	24	27	21	20	19	M22x1,5	38	M5	72
25	58	23	12	24	27	21	20	19	M22x1,5	38	M5	74

Codes

For cylinder Ø (mm)	Code	Item	Function
20	042022	ABS020CRD	Normally closed
25	042023	ABS025CRD	

Seals kit not available

For cylinder Ø (mm)	Code	Item	Function
20	042032	ABS020ARD	Normally open
25	042033	ABS025ARD	

Seals kit not available

Piston Rod-Brake for Cylinders

Staitc piston-rod brake for cylinders ISO 15552

Main features

32 ÷ 125
Bores Ø


Normally closed

ABS..CRD
Type

32 ÷ 125
Bores Ø


Normally open

ABS..ARD
Type



Technical data

Bore Ø (mm)	32	40	50	63	80	100	125
Fluid	Compressed filtered air with or without lubrication						
Pressure range	4 ÷ 8 bar						
Locking force (N)	650	1100	1600	2500	4000	6300	8700
Temperature range	-10°C ÷ +80°C						

Warning: working of piston rod-brake type ABS is static: before clamping is necessary to arrest the rod, is not usable for reducing the speed of the rod while moving. The locking-rod unit must only be unlocked when the pressures of both chambers of the cylinder are balanced, or the rod of the cylinder could move with non-uniform motion, causing problems to the application.
For the application of the piston rod-brake the actuator must be ordered with the rod predisposed for this (extended rod in hardened and chrome plated steel, option B).

Codes

For cylinder Ø (mm)	Code	Item	Function
32	042001	ABS032CRD	Normally closed
40	042002	ABS040CRD	
50	042003	ABS050CRD	
63	042004	ABS063CRD	
80	042005	ABS080CRD	
100	042006	ABS100CRD	
125	042007	ABS125CRD	

Seals kit not available

For cylinder Ø (mm)	Code	Item	Function
32	042011	ABS032ARD	Normally open
40	042012	ABS040ARD	
50	042013	ABS050ARD	
63	042014	ABS063ARD	
80	042015	ABS080ARD	
100	042016	ABS100ARD	
125	042017	ABS125ARD	

Seals kit not available

Piston Rod-Brake for Cylinders

Staitc piston-rod brake for cylinders ISO 15552

Standard dimensions

Type: **ABS**

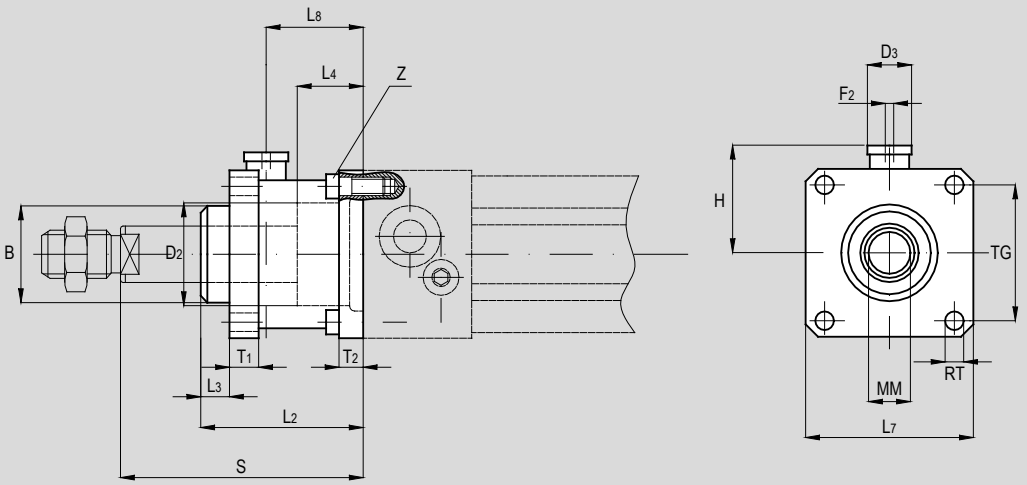

Per cylinder Ø (mm)	ØB d11	ØD$_2$	ØD$_3$	F$_2$	H	L$_2$	L$_3$	L$_4$	L$_7$	ØL$_8$	ØMM	RT	T$_1$	T$_2$	TG	Z	S
32	30	30,5	20	M5	25,5	58	10	20,5	45	31,5	12	M6	13	8	32,5	M6x20	74
40	35	35	24	1/8”	30	65	10	22,5	50	36	16	M6	13	8	38	M6x20	85
50	40	40	30	1/8”	36	82	12	29,5	60	45,5	20	M8	16	15	46,5	M8x30	107
63	45	45	38	1/8”	40	82	12	29,5	70	49,5	20	M8	16	15	56,5	M8x30	107
80	45	45	48	1/8”	50	110	20	35	90	61	25	M10	20	18	72	M10x35	136
100	55	55	48	1/8”	58	115	23	39	105	65	25	M10	20	18	89	M10x35	143
125	60	60	65	1/8”	80	167	45	51	140	86,5	32	M12	30	22	110	M12x40	187

Piston Rod-Brake for Cylinders

Dynamic piston-rod brake for cylinders ISO 15552

Main features

32 ÷ 100		**ABK**
Bores Ø	Normally closed	Type



Technical data

Bore Ø (mm)		32	40	50	63	80	100
Fluid		Compressed filtered air with or without lubrication					
Pressure range		4 ÷ 6,5 bar					
Minimum working pressure (bar)		4.0	4.0	3.5	3.5	3.0	3.0
Locking model		Secure locking of piston rod in any position					
Locking force (N)		510	860	1275	2060	3300	4620
Lock braking precision (mm)	V (mm/sec)	(Horizontal axis) operate with a load ratio of 70% or less (Veritcal axis) operate with a load ratio of 35% or less					
	50 (mm/sec)	±0.7	±0.8	±0.9	±0.8	±0.8	±1
	100 (mm/sec)	±1	±1	±1	±1	±1.2	±1.4
	200 (mm/sec)	±1.3	±1.6	±1.4	±1.8	±2.1	±2.4
Allowable energy (max) J(N • m) J(Ek=½mv2)		0.84	1.41	2.2	3.31	4.98	7.57
Temperature range		-10°C ÷ +60°C					

Warning: for the application of the piston rod-brake the actuator must be ordered with the rod predisposed for this (extended rod in hardened and chrome plated steel, option B1).

Codes

For cylinder Ø (mm)	Code	Item	Option
32	042035	ABK032	Normally closed
40	042036	ABK040	
50	042037	ABK050	
63	042038	ABK063	
80	042039	ABK080	
100	042040	ABK100	

Standard dimensions

Type: **ABK**

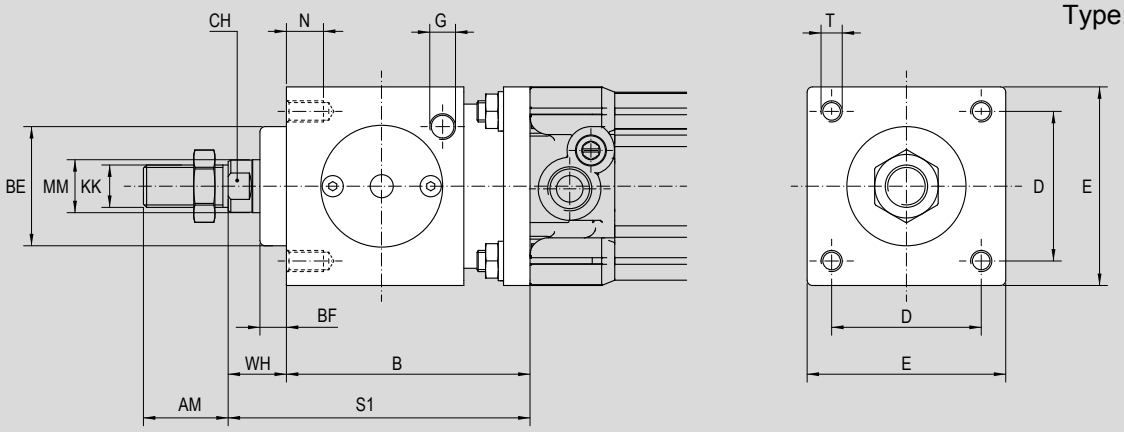

For cylinders Ø (mm)	AM	B	BE	BF	CH	D	E	G	ØKK	ØMM f7	N	S1	T	WH
32	22	73	30	8	10	32.5	47	1/8"	M10x1.25	12	12	99	M6	26
40	24	76	35	8	13	38	53	1/8"	M12x1.25	16	12	106	M6	30
50	32	90	40	8	17	46.5	65	1/8"	M16x1.5	20	14	127	M8	37
63	32	92	45	10	17	56.5	75	1/8"	M16x1.5	20	14	129	M8	37
80	40	110	45	10	22	72	95	1/4"	M20x1.5	25	16	156	M10	46
100	40	130	55	10	27	89	115	1/4"	M20x1.5	25	16	181	M10	51

Piston Rod-Brake for Cylinders

Dynamic piston-rod brake for cylinders ISO 15552

Horizontal application

Type: **ABK**

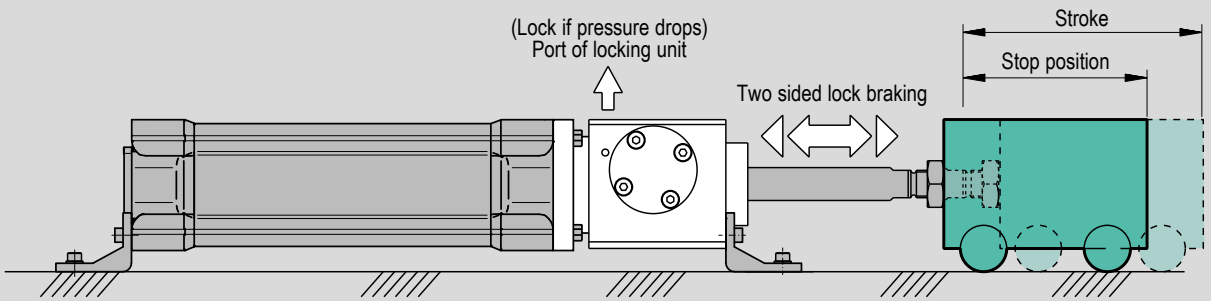

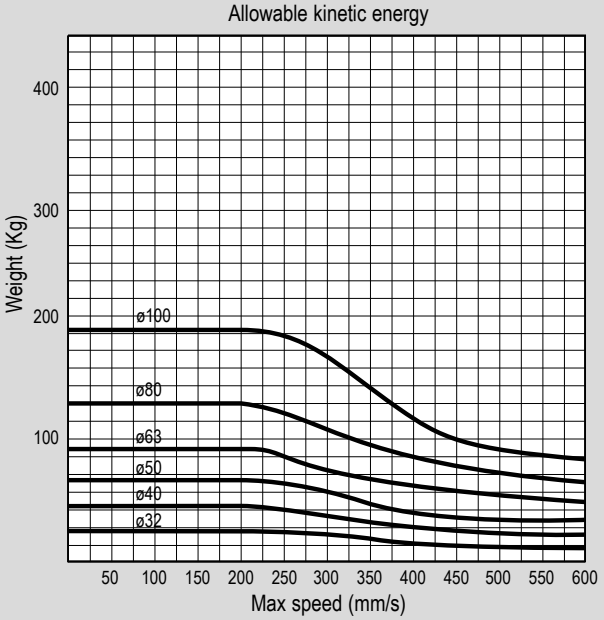

$$Ek = \frac{1}{2} m v^2$$

Ek: Kinetic energy (J)
v: Speed (m/s)
m: Weight (kg)

Example 1

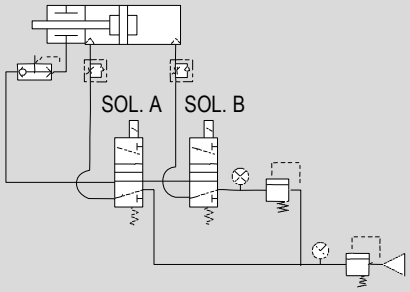

Example 2

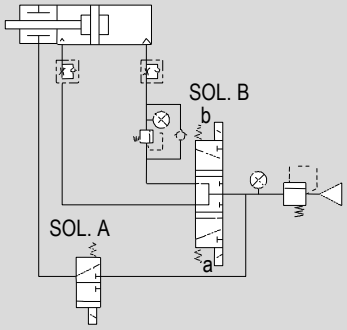

SOL. A	SOL. B	CYLINDER
ON	OFF	extended
OFF	OFF	stop
ON	OFF	extended
OFF	ON	retract
OFF	OFF	stop
OFF	ON	retract

SOL. A	SOL. B		CYLINDER
	a	b	
ON	OFF	ON	extended
OFF	OFF	OFF	stop
ON	OFF	ON	extended
ON	ON	OFF	retract
OFF	OFF	OFF	stop
ON	ON	OFF	retract

Vertical application

Type: **ABK**

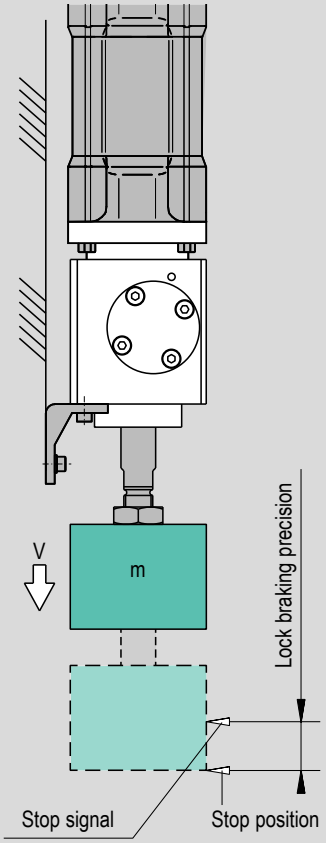

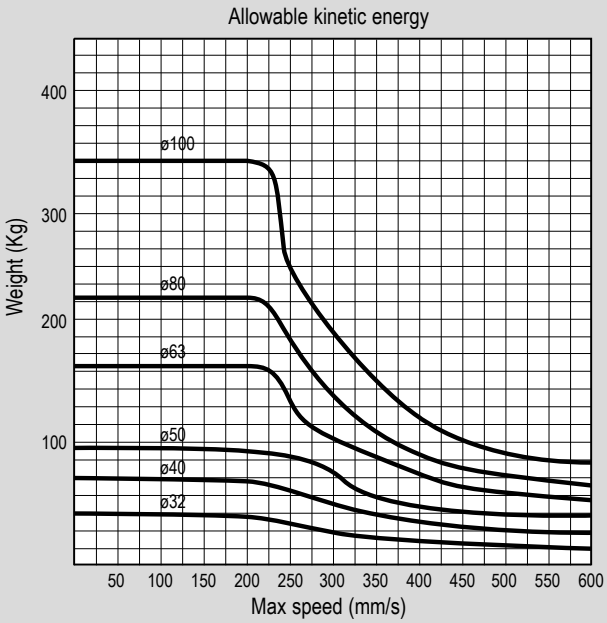

$$Ek = \frac{1}{2} m v^2$$

Ek: Kinetic energy (J)
v: Speed (m/s)
m: Weight (kg)

Notes

ROD ACCESSORIES
for Cylinders

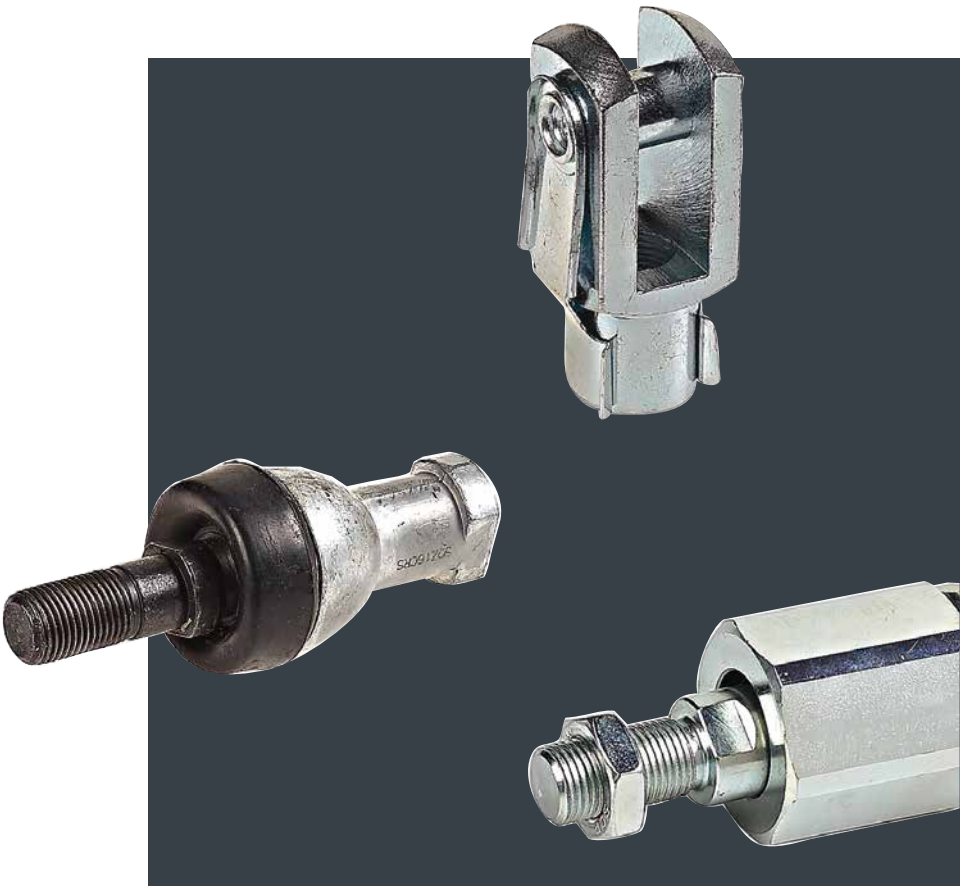

Find out our
key products

- **Solution for most applications**
- **Easy and intuitive choice**
- **Excellent value for money**
- **Wide availability**
- **Fast delivery**

Features and certifications

Rod accessories for cylinders. Wide range of accessories for the cylinder piston rod to allow the choice of the most appropriate mounting.
Alla rod accessories are supplied in compliance with Reach and RoHS directives.

Clevis ISO

from page 1.85.10



Series of female clevis conforming to ISO 8140 standard for mounting onto the male piston rod of the cylinder.

Clevis UNI e DIN

from page 1.86.1



Series of female clevis conforming to UNI 1676 and DIN 71752 standard for mounting onto the male piston rod of the cylinder.

Clevis CNOMO

from page 1.87.1



Series of female and male clevis conforming to CNOMO standard for mounting onto the male piston rod of the cylinder.

Clevis with male thread

from page 1.88.1



Series of female clevis with male thread conforming to UNI 1676 and DIN 71752 standard.

Bearing heads

from page 1.90.1



Bearings. Self-lubricating bearing heads (DIN 648K) servicing-free and conforming to ISO 8139 standard. Available with female thread or with male thread.

Self-aligning articulated coupling

from page 1.90.10



Bearings. Self-aligning articulated coupling. Supplied with hexagonal nut. For mounting onto the male piston rod of the cylinder. Allow to compensate the angular and parallel misalignments. Suitable for applications with high tractions.

Axial aritculated couplings

from page 1.90.20



Bearings. Axial aritculated couplings for mounting onto the male piston rod of the cylinder. Allow to compensate the angular and parallel misalignments.

Angle aritculated couplings

from page 1.90.30



Bearings. Angle aritculated couplings for mounting onto the male piston rod of the cylinder. Allow to compensate the angular misalignments.

Self-aligning coupling

from page 1.90.40



Couplings. Self-aligning articulated coupling for mounting onto the male piston rod of the cylinder. Allow to compensate the angular and parallel misalignments.

Rod nipples

from page 1.90.60



Rod nipple. for mounting onto the female piston rod of the cylinder.

Rod nuts

from page 1.90.70



Rod nut conforming to UNI 5589 and DIN 936 standard. For mounting onto the male piston rod of the cylinder.

Matching

Item	Description	Matching with cylinders									See page
		ISO 6432 MS.. MSM.. MD.. MDM.. MDMA..	ISO 15552 AMA.. AMT.. BMA.. BMT..	ROUND RS.. RD.. RDM.. RDMA..	CNOMO CX.. CM..	ISO 21287 CIS.. CI..	UNITOP CS.. CD..	COMPACT DU.. DUN.. DUM.. DUNM..	SHORT STROKE BS.. BSM.. BD.. BDM..	COMPACT "L" CLS.. CLSM.. CLD.. CLDM..	
FF..ISO	Female ISO Clevis	●	●	-	-	●(1)	●(1)	-	●(2)	●(2)	1.85.10
FFP..ISO	Female ISO Clevis	●	●	-	-	●(1)	●(1)	-	●(2)	●(2)	1.85.10
FFN..ISO	Female ISO Clevis	●	●	-	-	●(1)	●(1)	-	●(2)	●(2)	1.85.11
FF..DIN	Female UNI and DIN Clevis	-	-	●	-	-	-	●	-	-	1.86.1
FFP..DIN	Female UNI and DIN Clevis	-	-	●	-	-	-	●	-	-	1.86.1
FFN..DIN	Female UNI and DIN Clevis	-	-	●	-	-	-	●	-	-	1.86.2
FF..CN	Female CNOMO Clevis	-	-	-	●	-	-	-	-	-	1.87.1
FFP..CN	Female CNOMO Clevis	-	-	-	●	-	-	-	-	-	1.87.1
FFN..CN	Female CNOMO Clevis	-	-	-	●	-	-	-	-	-	1.87.1
FM..CN	Male CNOMO Clevis	-	-	-	●	-	-	-	-	-	1.87.2
FEM..	Female Clevis with male thread	-	●(3) (5)	-	-	●	●	-	-	-	1.88.1
RF..SE	Bearings - Bearing heads with female thread	●	●	●(4)	●	●(1)	●(1)	●(4)	●(2)	●(2)	1.90.1
RM..SE	Bearings - Bearing heads with male thread	-	●(3) (4)	-	-	●	●	-	●	●	1.90.2
GB..	Bearings - Self-aligning articulated coupling	●	●	●	●	●(1)	●(1)	●	●(2)	●(2)	1.90.10
RBI	Bearings - Axial articulated coupling	●	●	-	●	●(1)	●(1)	●	●(2)	●(2)	1.90.20
RBL	Bearings - Angle articulated coupling	●	●	-	●	●(1)	●(1)	●	●(2)	●(2)	1.90.30
GC..	Coupling - Self-aligning articulated coupling	●	●	-	●	●(1)	●(1)	-	●(2)	●(2)	1.90.40
N..AQB	Rod nipples	-	-	-	-	●	●	-	●	●	1.90.60
D..	Rod nuts	●	●	●(4)	●	●(1)	●(1)	●(4)	●(2)	●(2)	1.90.70

Key
● allowed matching; - not allowed matching
(1) compatible only with cylinders with male thread option (M)
(2) compatible only by mounting rod nipple type N..AQB
(3) directly compatible only with cylinders having female thread
(4) with coarse pitch thread
(5) in combination with bearing head mounted on rod

Rod accessories for cylinders
Clevis ISO

Main features

8 ÷ 100 — Bores Ø

ISO 8140

FF..ISO — Type



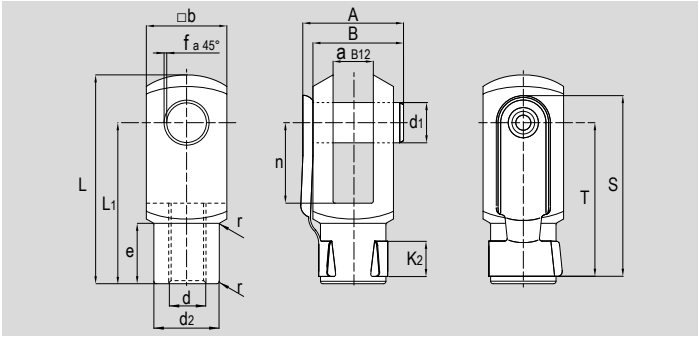

Options

Description	Suffix
Special versions on request	/S

Technical data

Type	Description	Materials
FF..ISO	Female clevis. Supplied complete with clips.	White zinc-plated steel

Dimensions

For cylinder Ø mm	Code	Item	d (thread)	a_{B12}	A	S	B	□b	d_1	T	l_2	d_2	e	f (a 45°)	L	L_1	n	r	Weight (g)
8-10	041001	FF04ISO/DIN	M4x0,7	4	11	19	9	8	4	15	5	8	6	0,5	21	16	8	0,5	7
12-16	041002	FF06ISO/DIN	M6x1	6	16	28	14	12	6	23	6	10	9	0,5	31	24	12	0,5	20
20	041003	FF08ISO/DIN	M8x1,25	8	22	37	19	16	8	31	8	14	12	0,5	42	32	16	0,5	48
25-32	041004	FF10ISO	M10x1,25	10	26	46	23	20	10	39	10	18	15	0,5	52	40	20	0,5	93
40	041005	FF12ISO	M12x1,25	12	32	55	28	24	12	47	12	20	18	0,5	62	48	24	0,5	154
50-63	041006	FF16ISO	M16x1,5	16	40	72	36	32	16	62	14	26	24	1	83	64	32	1	351
80-100	041007	FF20ISO	M20x1,5	20	48	88	44	40	20	72	16	34	30	1	105	80	40	1	680

Main features

25 ÷ 320 — Bores Ø

ISO 8140

FFP..ISO — Type



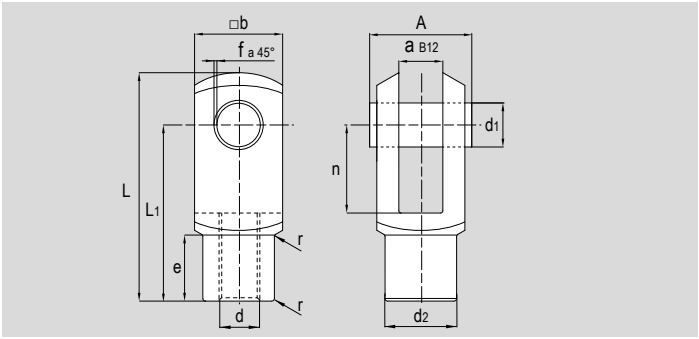

Options

Description	Suffix
Special versions on request	/S

Technical data

Type	Description	Materials
FFP..ISO	Female clevis. Supplied complete with pin and seeger.	White zinc-plated steel

Dimensions

For cylinder Ø mm	Code	Item	d (thread)	a_{B12}	A	□b	d_1	d_2	e	f (a 45°)	L	L_1	n	r	Weight (g)
25-32	041051	FFP10ISO	M10x1,25	10	26	20	10	18	15	0,5	52	40	20	0,5	89
40	041040	FFP12ISO	M12x1,25	12	32	24	12	20	18	0,5	62	48	24	0,5	147
50-63	041013	FFP16ISO	M16x1,5	16	40	32	16	26	24	1	83	64	32	1	343
80-100	041017	FFP20ISO	M20x1,5	20	48	40	20	34	30	1	105	80	40	1	668
*	041008	FFP24ISO	M24x2	25	-	50	25	42	36	1	132	100	50	1	1330
125	041009	FFP27ISO	M27x2	30	-	55	30	48	38	1	148	110	54	1	1790
160-200	041010	FFP36ISO	M36x2	35	-	70	35	60	40	1	188	144	72	1	3550
250	041068	FFP42ISO	M42x2	40	104,3	85	40	70	63,5	1	232	168	84	5	6690
320	041069	FFP48ISO	M48x2	50	117,3	96	50	82	73	1	265	192	96	5	9954

* Per cylinders non a norme.

Rod accessories for cylinders
Clevis ISO

Main features

8 ÷ 320 — Bores Ø

ISO 8140

FFN..ISO — Type

Options

Description	Suffix
Special versions on request	/S



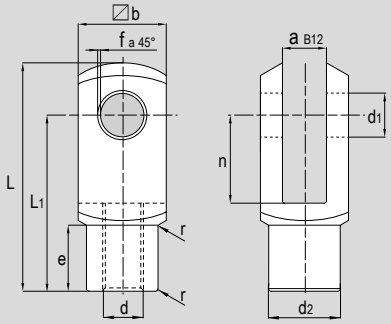

Technical data

Type	Description	Materials
FFN..ISO	Female clevis. Body only.	White zinc-plated steel

Dimensions

For cylinder Ø mm	Code	Item	d (thread)	a_{B12}	⍁b	d_1	d_2	e	f	L	L_1	n	r	Weight (g)
8-10	041091	FFN04ISO/DIN	M4x0,7	4	8	4	8	6	0,5	21	16	8	0,5	5
12-16	041011	FFN06ISO/DIN	M6x1	6	12	6	10	9	0,5	31	24	12	0,5	15
20	041018	FFN08ISO/DIN	M8x1,25	8	16	8	14	12	0,5	42	32	16	0,5	37
25-32	041014	FFN10ISO	M10x1,25	10	20	10	18	15	0,5	52	40	20	0,5	74
40	041016	FFN12ISO	M12x1,25	12	24	12	20	18	0,5	62	48	24	0,5	121
50-63	041012	FFN16ISO	M16x1,5	16	32	16	26	24	1	83	64	32	1	282
80-100	041015	FFN20ISO	M20x1,5	20	40	20	34	30	1	105	80	40	1	550
*	041021	FFN24ISO	M24x2	25	50	25	42	36	1	132	100	50	1	1110
125	**	FFN27ISO	M27x2	30	55	30	48	38	1	148	110	54	1	1440
160-200	**	FFN36ISO	M36x2	35	70	35	60	40	1	188	144	72	1	2930
250	**	FFN42ISO	M42x2	40	85	40	70	63,5	1	232	168	84	5	5670
320	**	FFN48ISO	M48x2	50	96	50	82	73	1	265	192	96	5	8154

* For cylinders non conforming to standards; ** For code please contact the sales department

Rod accessories for cylinders
Clevis UNI and DIN

Main features

UNI	DIN	FF..DIN
1676	71752	Type

Options

Description	Suffix
Special versions on request	/S



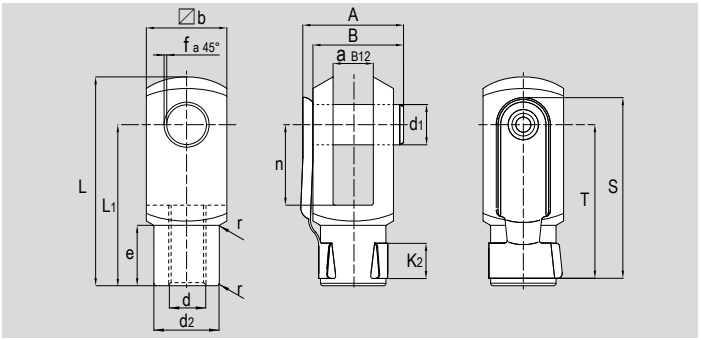

Technical data

Type	Description	Materials
FF..DIN	Female clevis. Supplied complete with clips.	White zinc-plated steel

Dimensions

Code	Item	d (thread)	a_{B12}	A	B	⍁b	d_1	S	T	K_2	d_2	e	f (a 45°)	L	L_1	n	r	Weight (g)
041001	FF04ISO/DIN	M4x0,7	4	11	9	8	4	19	15	5	8	6	0,5	21	16	8	0,5	7
041022	FF05DIN	M5x0,8	5	13,5	12	10	5	23	19	6	9	7,5	0,5	26	20	10	0,5	12
041002	FF06ISO/DIN	M6x1	6	16	14	12	6	28	23	6	10	9	0,5	31	24	12	0,5	20
041003	FF08ISO/DIN	M8x1,25	8	22	19	16	8	37	31	8	14	12	0,5	42	32	16	0,5	48
041025	FF10DIN	M10x1,5	10	26	23	20	10	46	39	10	18	15	0,5	52	40	20	0,5	93
041026	FF12DIN	M12x1,75	12	32	28	24	12	55	47	12	20	18	0,5	62	48	24	0,5	154
041027	FF14DIN	M14x2	14	-	-	27	14	-	-	-	24	22,5	1	72	56	28	1	224
041028	FF16DIN	M16x2	16	40	36	32	16	72	62	14	26	24	1	83	64	32	1	351
041030	FF20DIN	M20x2,5	20	48	44	40	20	88	72	16	34	30	1	105	80	40	1	680

Main features

UNI	DIN	FFP..DIN
1676	71752	Type

Options

Description	Suffix
Special versions on request	/S



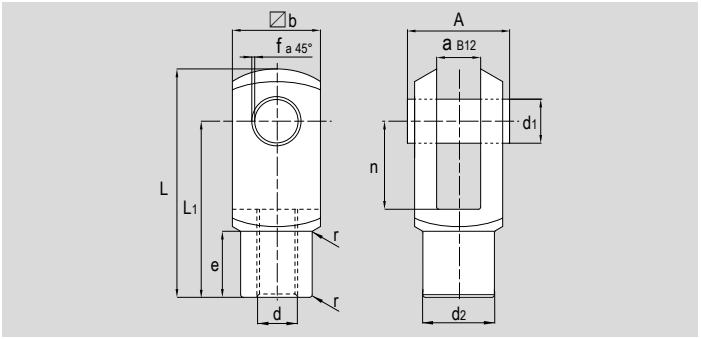

Technical data

Type	Description	Materials
FFP..DIN	Female clevis. Supplied complete with pin and seeger.	White zinc-plated steel

Dimensions

Code	Item	d (thread)	a_{B12}	A	⍁b	d_1	d_2	e	f (a 45°)	L	L_1	n	r	Weight (g)
041096	FFP10DIN	M10x1,5	10	26	20	10	18	15	0,5	52	40	20	0,5	89
041217	FFP12DIN	M12x1,75	12	32	24	12	20	18	0,5	62	48	24	0,5	147
041213	FFP16DIN	M16x2	16	40	32	16	26	24	1	83	64	32	1	343
*	FFP20DIN	M20x2,5	20	48	40	20	34	30	1	105	80	40	1	668
041067	FFP24DIN	M24x3	25	-	50	25	42	36	1	132	100	50	1	1330

* For code please contact the sales department

Rod accessories for cylinders
Clevis UNI and DIN

Main features

UNI	DIN	FFN..DIN
1676	71752	Type

Options

Description	Suffix
Special versions on request	/S



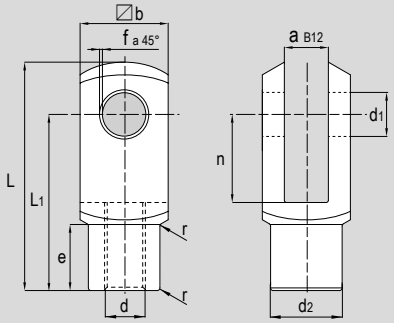

Technical data

Type	Description	Materials
FFN..DIN	Female clevis. Body only.	White zinc-plated steel

Dimensions

Code	Item	d (thread)	a_{B12}	⍁b	d_1	d_2	e	f	L	L_1	n	r	Weight (g)
041091	FFN04ISO/DIN	M4x0,7	4	8	4	8	6	0,5	21	16	8	0,5	5
041011	FFN06ISO/DIN	M6x1	6	12	6	10	9	0,5	31	24	12	0,5	15
041018	FFN08ISO/DIN	M8x1,25	8	16	8	14	12	0,5	42	32	16	0,5	37
041020	FFN10DIN	M10x1,5	10	20	10	18	15	0,5	52	40	20	0,5	74
041203	FFN12DIN	M12x1,75	12	24	12	20	18	0,5	62	48	24	0,5	121
041202	FFN16DIN	M16x2	16	32	16	26	24	1	83	64	32	1	282
041205	FFN20DIN	M20x2,5	20	40	20	34	30	1	105	80	40	1	550
041067	FFN24DIN	M24x3	25	50	25	42	36	1	132	100	50	1	1110

Rod accessories for cylinders
Clevis CNOMO

Main features

25 ÷ 125 **CNOMO** **FF..CN**

Bores Ø | Type

Options

Description	Suffix
Special versions on request	/S



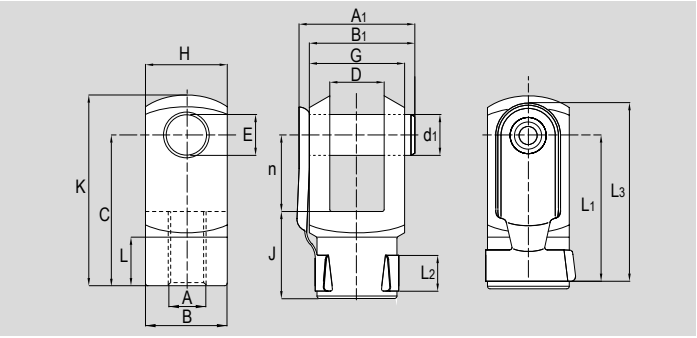

Technical data

Type	Description	Materials
FF..CN	Female clevis. Supplied complete with clips.	White zinc-plated steel

Dimensions

For cylinder Ø mm	Code	Item	A (thread)	A_1	B	B_1	C	D h11	d_1 h11	E h8	G	H	L_1	J	L_2	K	L_3	L	n	Weight (g)
25-32	041081	FF10CN	M10x1,5	28	18	25	36	11	8	8	22	22	36	20	10	45	41	14	16	94
40-50	041082	FF16CN	M16x1,5	44	26	40	51	18	12	12	36	26	50	26	12	64	60	17	25	253
63-80	041084	FF20CN	M20x1,5	53	34	49	63	22	16	16	45	34	63	30	15	80	74	18,5	33	530
100-125	041086	FF27CN	M27x2	73	42	69	85	30	20	20	63	42	81	45	19	105	98	30	40	1110

Main features

25 ÷ 200 **CNOMO** **FFP..CN**

Bores Ø | Type

Options

Description	Suffix
Special versions on request	/S



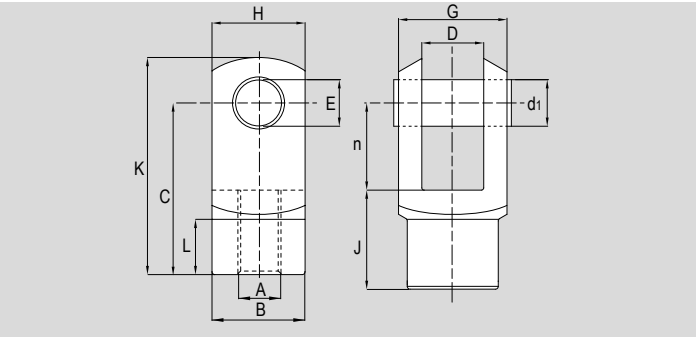

Technical data

Type	Description	Materials
FFP..CN	Female clevis. Supplied complete with pin and seeger	White zinc-plated steel
FFN..CN*	Female clevis. Body only.	

Dimensions

For cylinder Ø mm	Code	Item	A (thread)	B	C	D h11	d_1 h11	E h8	G	H	J	K	L	n	Weight (g)
25-32	041106	FFP10CN	M10x1,5	18	36	11	8	8	22	22	20	45	14	16	94
40-50	041105	FFP16CN	M16x1,5	26	51	18	12	12	36	26	26	64	17	25	253
63-80	041097	FFP20CN	M20x1,5	34	63	22	16	16	45	34	30	80	18,5	33	530
100-125	041087	FFP27CN	M27x2	42	85	30	20	20	63	42	45	105	30	40	1110
160-200	041088	FFP36CN	M36x2	50	115	40	25	25	80	50	75	140	45	-	2160

* For type FFN..CN clevis codes, please contact the sales department;

Rod accessories for cylinders
Clevis CNOMO

Main features

25 ÷ 200 CNOMO FM..CN

Bores Ø Type

Options

Description	Suffix
Special versions on request	/S



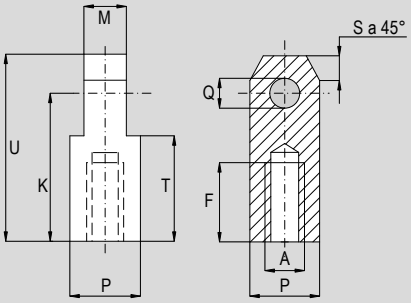

Technical data

Type	Description	Materials
FM..CN	Male clevis. Supplied complete with pin and seeger	White zinc-plated steel
FMN..CN*	Male clevis. Body only.	

Dimensions

For cylinder Ø mm	Code	Item	A (thread)	F	M	P	Q h8	S	T	U	K	Weight (g)
25-32	041041	FM10CN	M10x1,5	20	11	22	8	6	25	45	36	-
40-50	041042	FM16CN	M16x1,5	30	18	32	12	10	34	64	51	-
63-80	041044	FM20CN	M20x1,5	36	22	36	16	12	41	80	63	-
100-125	041046	FM27CN	M27x2	50	30	45	20	17,5	58	105	85	-
160-200	041048	FM36CN	M36x2	70	40	63	25	20	81	140	115	-

* For type FMN..CN clevis codes, please contact the sales department;

Rod accessories for cylinders

Clevis with male thread

Main features

UNI	DIN	FEM
1676	71752	Type

Options

Description	Suffix
Special versions on request	/S



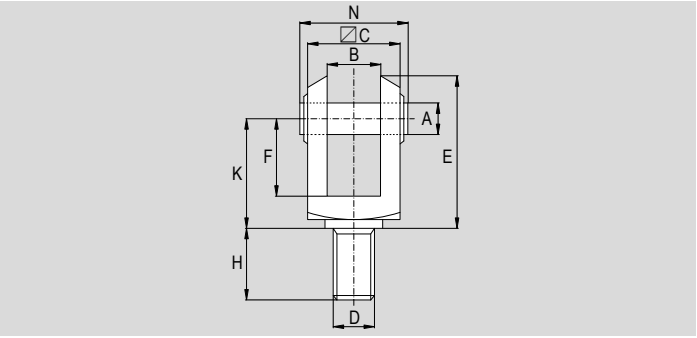

Technical data

Type	Description	Materials
FEM..	Female clevis with male thread. Supplied complete with pin and seeger	White zinc-plated steel

Dimensions

Code	Item	D (thread)	ØA	B	⍁C	E	K	F	H	N	Weight (g)
041061	FEM10	M10x1,25	10	10	20	39	27	20	22	27	-
041062	FEM12	M12x1,25	12	12	24	46	32	24	24	31	-
041063	FEM16	M16x1,5	16	16	32	61	42	32	32	39	-
041064	FEM20	M20x1,5	20	20	40	77	52	40	40	49	-
041065	FEM27	M27x2	25	25	50	98	66	50	43	59	-
041066	FEM33	M33x2	28	28	55	110	74	56	56	64	-

Rod accessories for cylinders
Bearings - Bearing heads

Main features

8 ÷ 320	ISO	RF..SE
Bores Ø	8139	Type



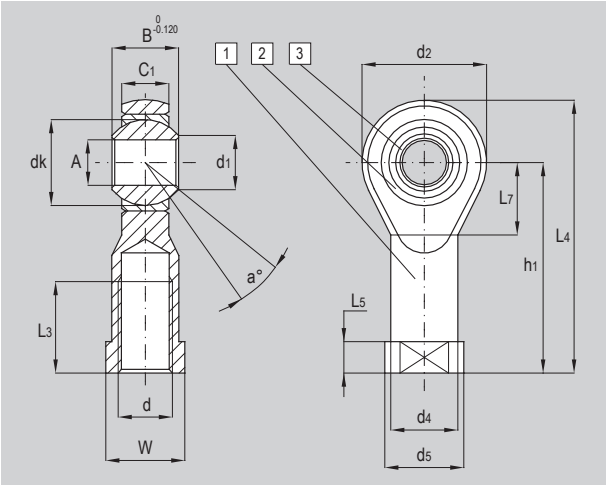

Options

Description	Suffix
Left thread	S
Special versions on request	/S

Technical data

Type	Description	Temperature range
RF..SE	Bearings. Bearing head (DIN 648K) self lubricating and servicing free, with female thread.	-30°C ÷ +150°C

Standard materials

Position	Description	Material
1	Body	Zinc-plated / nichel-plated steel
2	Sphere	Hardened ground polished steel
3	External ring	Self lubricated brass / PTFE

Dimensions

For cylinders ISO Ø mm	Code	Item	d h6 (thread)	A h7	B	C_1	d_1	d_2	d_4	d_5	dk	h_1	L_3	L_4	L_5	L_7	W	a°	Static load (daN)	Weight (g)
8-10	041551	RF5SE	M4	5	8	6	7,7	18	9	11	11,11	27	10	36	4	10	9	13	600	20
12-16	041552	RF6SE	M6	6	9	6,75	8,9	20	10	13	12,70	30	12	40	5	11	11	13	700	25
20	041553	RF8SE	M8	8	12	9	10,4	24	12,5	16	15,88	36	16	48	5	13	14	14	1200	47
25-32	041554	RF10SE	M10x1,25	10	14	10,5	12,9	28	15	19	19,05	43	20	57	6,5	15	17	13	1400	88
40	041555	RF12SE	M12x1,25	12	16	12	15,4	32	17,5	22	22,23	50	22	66	6,5	17	19	13	1900	140
50-63	041557	RF16SE	M16x1,5	16	21	15	19,3	42	22	27	28,58	64	28	85	8	23	22	15	4800	250
80-100	041559	RF20SE	M20x1,5	20	25	18	24,3	50	27,5	34	34,93	77	33	102	10	27	30	14	5200	430
125	041562	RF30SE	M27x2	30	37	25	34,8	70	40	50	50,80	110	51	145	15	36	41	17	10800	1200
160-200	041563	RF35SE	M36x2	35	43	28	37,7	80	46	58	57,15	125	56	165	17	41	50	19	12400	1959
250	041571	RF40SE	M42x2	40	49	33	45,2	91	53	65	66,67	142	60	187,5	19	45	55	17	-	-
320	041572	RF50SE	M48x2	50	60	45	56,6	117	65	75	82,50	160	65	218,5	23	58	65	12	-	-

Note: available also with coarse pitch thread and other sizes. For availability and codes, please contact the sales department.

Main features

ISO 8139

RM..SE Type



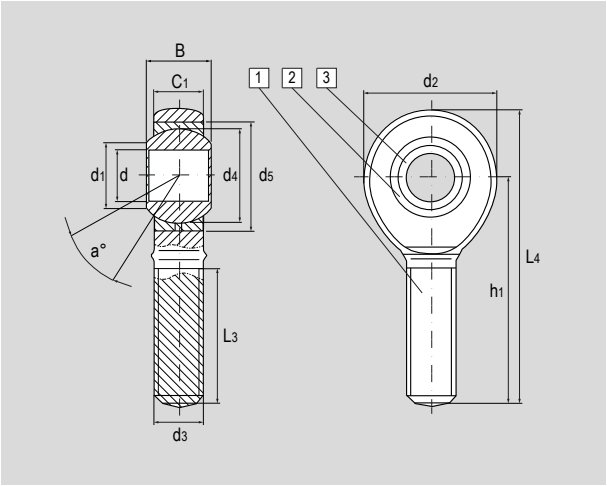

Options

Description	Suffix
Left thread	S
Special versions on request	/S

Technical data

Type	Description	Temperature range
RM..SE	Bearings. Bearing head (DIN 648K) self lubricating and servicing free, with male thread.	-30°C ÷ +150°C

Standard materials

Position	Description	Material
1	Body	Zinc-plated / nichel-plated steel
2	Sphere	Hardened ground polished steel
3	External ring	Self lubricated brass / PTFE

Dimensions

d_3 (thread)	Code	Item	d	d_1	d_2	d_4	B	C_1	d_5	h_1	L_3	L_4	a°	Dynamic load (KN)	Static load (KN)	Weight (g)
M4x0,7	041500	RM4SE	5	7,7	18	11,11	8	6	13	33	19	42	13	3,2	5,2	10
M5x0,8	041501	RM5SE	5	7,7	18	11,11	8	6	13	33	19	42	13	3,2	5,2	10
M6x1	041502	RM6SE	6	8,9	20	12,70	9	6,75	16	36	21	46	13	4,2	6,7	20
M8x1,25	041503	RM8SE	8	10,4	24	15,88	12	9	19	42	25	54	14	7,0	9,9	30
M10x1,25	041504	RM10SE	10	12,9	28	19,05	14	10,5	22	48	28	63	13	9,6	12,4	50
M12x1,25	041505	RM12SE	12	15,4	32	22,23	16	12	26	54	32	71	13	13,0	14,8	85
M16x1,5	041507	RM16SE	16	19,3	42	28,58	21	15	32	66	37	87	15	21,3	34,3	180
M20x1,5	041509	RM20SE	20	24,3	50	34,93	25	18	40	78	45	103	14	30,9	49,8	340
M27x2	041512	RM30SE	30	34,8	70	50,8	37	25	-	110	66	145	17	71,9	96,7	1070
M36x2	041513	RM35SE	35	37,7	80	57,15	43	28	-	140	85	180,5	19	-	-	1640
M42x2	041515	RM40SE	40	45,2	91	66,67	49	33	-	150	90	195,5	17	-	-	2300
M48x2	041516	RM50SE	50	56,6	117	82,5	60	45	-	185	105	243,5	12	-	-	4800

Note: available also with coarse pitch thread and other sizes. For availability and codes, please contact the sales department.

Rod accessories for cylinders

Bearings - Self-aligning articulated coupling

Main features

8 ÷ 320	GB
Bores Ø	Type



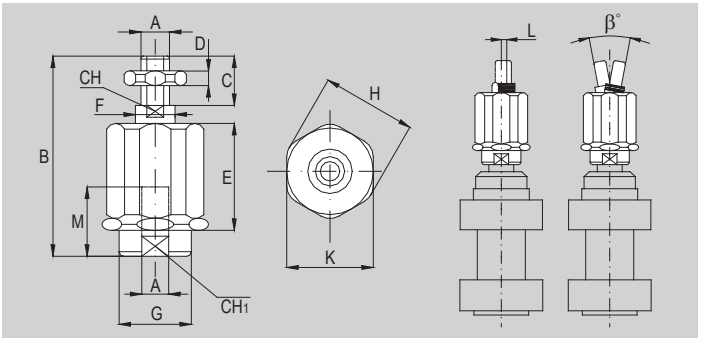

Options

Description	Suffix
Special versions on request	/S

Technical data

Type	Description	Materials
GB..	Bearings. Self-aligning articulated coupling. Supplied with hexagonal nut. For mounting onto the male piston rod of the cylinder. Allow to compensate the angular and parallel misalignments. Suitable for applications with high tractions.	Zinc-plated steel

Dimensions

For cylinders ISO Ø mm	Code	Item	A (thread)	B	C	D	E	ØF	ØG	ØH	K	L	M	β°	CH	CH_1	Max thrust and traction load (N)	Weight (g)
8-10	041701	GB008	M4x0,7	33	8	2,2	15,5	6	8,5	14,5	12	1	10	10	3,2	12	750	20
*	041700	GB005	M5x0,8	38,5	13,5	2,5	17,5	6	8,5	14,5	13	1	10	10	5	7	1200	20
12-16	041702	GB010	M6x1	39	12	3,2	17,5	6	8,5	14,5	13	1	10	10	5	7	1200	30
20	041703	GB020	M8x1,25	58	16	4	24,5	8	12,5	19	17	2	20	10	7	10	2500	60
25-32	041704	GB040	M10x1,25	73	20	5	34	14	21	32	30	2	20	10	12	19	5000	220
*	041705	GB050	M10x1,5	73	20	5	34	14	21	32	30	2	20	10	12	19	5000	220
40	041706	GB060	M12x1,25	77	24	6	34	14	21	32	30	2	20	10	12	19	5000	230
*	041707	GB090	M12x1,75	77	24	6	34	14	21	32	30	2	20	10	12	19	5000	230
50-63	041708	GB100	M16x1,5	103	32	8	54	22	32	45	41	2	32	10	19	30	10000	660
80-100	041709	GB120	M20x1,5	122	40	9	54	22	33,5	45	41	2	40	10	19	30	10000	700
125	041711	GB130	M27x2	147	54	13,5	71	27	39	60	55	2	40	8	24	32	30000	1600
160-200	041712	GB160-200	M36x2	241	72	14	125	38	56	80	75	2	40	8	36	50	40000	5100
250	041713	GB250	M42x2	271	82	16	148	42	64	98	85	2	40	8	36	60	50000	9200
320	041714	GB320	M48x2	271	82	18	148	48	64	98	90	2	40	8	42	60	75000	10500

* For cylinders not conforming to ISO standards

Rod accessories for cylinders
Bearings - Axial articulated couplings

Main features

12 ÷ 100	**RBI**
Bores Ø	Type



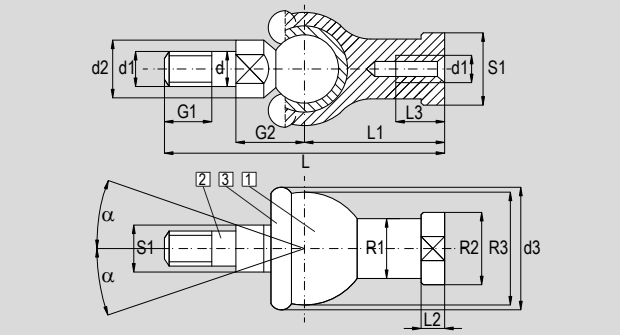

Options

Description	Suffix
Special versions on request	/S

Technical data

Type	Description	Temperature range
RBI..	Bearings. Axial aritculated couplings for mounting onto the male piston rod of the cylinder. Allow to compensate the angular and parallel misalignments.	-20°C ÷ +80°C

Standard materials

Position	Description	Material
1	Body	Special zinc alloy
2	Pin	Zinc-plated steel
3	Seal	Neoprene (pre-lubricated spherical coupling)

Dimensions

For cylinders ISO Ø mm	Code	Item	d	d_1 (thread)	d_2	d_3	G_1	G_2	L	L_1	L_2	L_3	R_1	R_2	R_3	S_1	S_2	α	Dynamic load (KN)	Static load (KN)	Weight (g)
*	041601	RBI5	5	M5x0,8	9	20	8	11	46	24	4	12	9	11	17	7	9	15	1,7	5,7	25
12-16	041602	RBI6	6	M6x1	10	20	11	12,2	55,2	28	5	15	10	13	20	8	11	15	2,2	7,5	40
20	041603	RBI8	8	M8x1,25	12	24	12	16	65	32	5	16	12,5	16	24	10	14	15	3,3	11,0	75
25-32	041604	RBI10	10	M10x1,25	14	30	15	19,5	74,5	35	6,5	18	15	19	28	11	17	15	4,8	16,0	121
*	041611	RBI10x1,5	10	M10x1,5	14	30	15	19,5	74,5	35	6,5	18	15	19	28	11	17	15	4,8	16,0	121
40	041605	RBI12	12	M12x1,25	17	32	17	21	84	40	6,5	20	17,5	22	32	15	19	15	6,6	22,0	187
*	041606	RBI14	14	M14x1,5	19	38	22	23,5	104,5	45	8	25	20	25	36	17	22	11	8,7	29,0	277
50-63	041607	RBI16	16	M16x1,5	22	44	23	25,5	112	50	8	27	22	27	40	19	22	11	10,0	33,0	361
*	041608	RBI18	18	M18x1,5	23	45	25	31	130,5	58	10	32	25	31	45	20	27	11	11,0	37,0	539
80-100	041609	RBI20	20	M20x1,5	27	50	25	29	133	63	10	38	27,5	34	45	24	30	7,5	11,0	37,0	575
*	041610	RBI22	22	M22x1,5	27	52	26	33	145	70	12	43	30	37	50	24	32	7,5	14,0	46,0	757

* For cylinders not conforming to ISO standards

Rod accessories for cylinders
Bearings - Angle articulated couplings

Main features

12 ÷ 100	RBL
Bores Ø	Type

Options

Description	Suffix
Special versions on request	/S



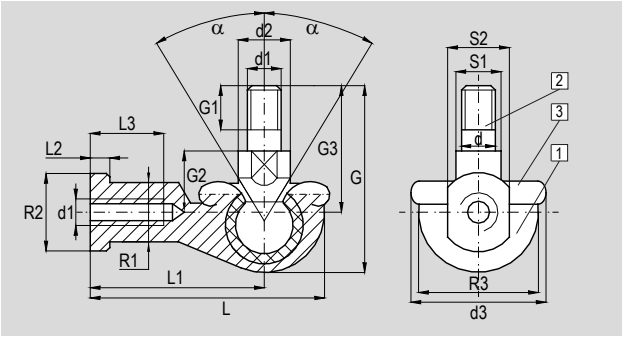

Technical data

Type	Description	Temperature range
RBL..	Bearings. Angle aritculated couplings for mounting onto the male piston rod of the cylinder. Allow to compensate the angular misalignments.	-20°C ÷ +80°C

Standard materials

Position	Description	Material
1	Body	Special zinc alloy
2	Pin	Zinc-plated steel
3	Seal	Neoprene (pre-lubricated spherical coupling)

Dimensions

For cylinders ISO Ø mm	Code	Item	d	d_1 (thread)	d_2 min	d_3 max	G max	G_1 min	G_2	G_3 max	L max	L_1	L_2 max	L_3 min	R_1 max	R_2 max	R_3 max	S_1	S_2	α	Dynamic load (KN)	Static load (KN)	Weight (g)
*	041651	RBL5	5	M5x0,8	9	20	30	8	10	21	36	27	4	14	9	12	18	7	10	9,2	25	2,7	26
12-16	041652	RBL6	6	M6x1	10	20	36	11	11	26	40,5	30	5	14	10	13	20	8	10	12	25	3,6	39
20	041653	RBL8	8	M8x1,25	12	24	43,5	12	14	31	49	36	5	17	12,5	16	25	10	13	19	25	5,7	68
25-32	041654	RBL10	10	M10x1,25	14	30	51,5	15	17	37	58	43	6,5	24	15	19	29	11	16	27	25	8,2	112
40	041655	RBL12	12	M12x1,25	19	32	57,5	17	19	42	66	50	6,5	25	17,5	22	31	16	18	37	25	11	164
*	041656	RBL14	14	M14x1,5	19	38	73,5	22	21,5	56	75	57	8	26	20	25	35	16	21	48	25	14	254
50-63	041657	RBL16	16	M16x1,5	22	44	79,5	23	23,5	60	84	64	8	32	22	27	39	18	24	53	20	16	336
*	041658	RBL18	18	M18x1,5	25	45	90	25	26,5	68	93	71	10	34	25	31	44	21	27	61	20	18	464
80-100	041659	RBL20	20	M20x1,5	29	50	90	25	27	68	99	77	10	35	27,5	34	44	24	30	61	20	18	538
*	041660	RBL22	22	M22x1,5	29	52	95	26	28	70	109	84	12	41	30	37	50	24	30	75	16	22	713

* For cylinders not conforming to ISO standards

Main features

25 ÷ 200	GC
Bores Ø	Type

Options

Description	Suffix
Special versions on request	/S



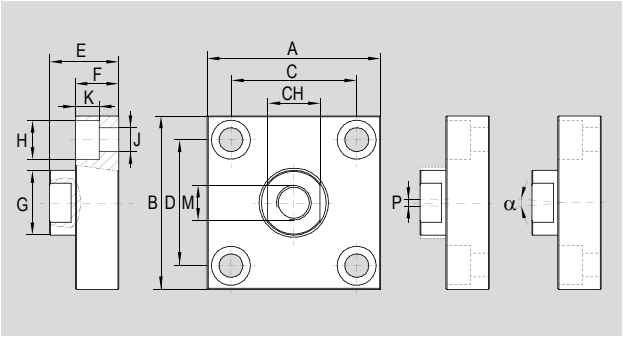

Technical data

Type	Description	Materials
GC..	Couplings. Self-aligning articulated coupling for mounting onto the male piston rod of the cylinder. Allow to compensate the angular and parallel misalignments.	Zinc-plated steel

Dimensions

M (thread)	Code	Item	A	B	C	D	CH	E	F	ØG	ØH	ØJ	K	P	α	Weight (g)
M10x1,25	041722	GCM10x1,25	60	37	36 ±0,15	23 ±0,15	17	24	15	20	11	6,6	7	2	0,4÷0,8	30
M12x1,25	041723	GCM12x1,25	60	56	42 ±0,2	38 ±0,2	19	30	20	25	15	9	9	2	0,4÷0,8	40
M16x1,5	041724	GCM16x1,5	80	80	58 ±0,2	58 ±0,2	24	32	20	30	18	11	11	2	0,4÷0,8	90
M20x1,5	041725	GCM20x1,5	90	90	65 ±0,2	65 ±0,2	36	35	20	40	20	14	13	2	0,4÷0,8	110
M27x2	041726	GCM27x2	90	90	65 ±0,2	65 ±0,2	36	35	20	40	20	14	13	2	0,4÷0,8	110
M36x2	041727	GCM36x2	125	125	90 ±0,2	90 ±0,2	50	55	30	60	26	18	17	3	0,4÷0,95	340

Rod accessories for cylinders
Rod nipples

Main features

12 ÷ 100
Bores Ø

N..AQB
Type



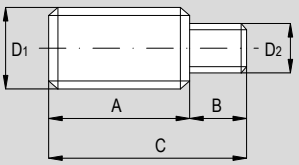

Technical data

Type	Description	Materials
N..AQB	Rod nipple. for mounting onto the female piston rod of the cylinder. Allow mounting female threaded acccessories on standard short stroke cylinders.	Zinc-plated steel

Dimensions

For cylinder Ø mm	Code	Item	D_1 (male thread 1)	D_2 (male thread 2)	A	B	C	Weight (g)
12	040079	N6-3AQB	M6x1	M3x0,5	16	6,5	22,5	-
16	040080	N6-4AQB	M6x1	M4x0,7	15	8	23	-
20-25	040081	N8-5AQB	M8x1,25	M5x0,8	20	10	30	-
32-40	040082	N10-6AQB	M10x1,25	M6x1	22	12	34	-
50-63	040083	N12-8AQB	M12x1,25	M8x1,25	24	14	38	-
50-63	040084	N16-8AQB	M16x1,5	M8x1,25	32	14	46	-
80	040085	N16-10AQB	M16x1,5	M10x1,5	32	15	47	-
100	040086	N20-12AQB	M20x1,5	M12x1,75	40	20	60	-

Main features

8 ÷ 320	UNI 5589	D
Bores Ø		Type

DIN 936



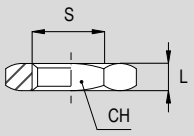

Technical data

Type	Description	Materials
D..	Rod nut conforming to UNI 5589 and DIN 936 standard. For mounting onto the male piston rod of the cylinder.	Zinc-plated steel

Dimensions

Code	Item	S (thread)	L	CH	Weight (g)
881397	D4x0,7	M4x0,7	2,8	7	0,6
041450	D6x1	M6x1	4	10	2,0
041451	D8x1,25	M8x1,25	5	13	4,0
041452	D10x1,25	M10x1,25	6	17	8,5
041453	D10x1,5	M10x1,5	6	17	9,0
041454	D12x1,25	M12x1,25	7	19	11,5
041455	D16x1,5	M16x1,5	8	24	20,0
041456	D20x1,5	M20x1,5	9	30	34,0
041458	D27x2	M27x2	12	41	87,0
041459	D36x2	M36x2	14	55	184,0
041449	D42x2	M42x2	16	65	295,0
041477	D48x2	M48x2	18	75	444,0

Note: available also with coarse pitch thread and other sizes. For availability and codes, please contact the sales department.

Notes

MOUNTING ACCESSORIES
for Cylinders



Find out our
key products

- **Solution for most applications**
- **Easy and intuitive choice**
- **Excellent value for money**
- **Wide availability**
- **Fast delivery**

Features and certifications

Series of mounting accessories for cylinders. For front, rear or center mounting, or with others accessories (e.g.: hinges), to allow the choice of the most appropriate mounting. All mounting accessories are supplied in compliance with Reach and RoHS directives.

Steel mountings for cylinders ISO 6432

from page 1.95.1



Mountings for cylinders ISO 6432. Rear clevises ISO MP3, flanges ISO MS3 and high feet ISO MF8 in steel, white zinc plating treatment.

Steel mountings for round cylinders

from page 1.96.1



Mountings for round cylinders from bore 32 to bore 63. Rear clevis, foot-hinges, foot-flanges, pins and head nuts in steel, white zinc plating treatment.

Aluminium mountings for cylinders ISO 15552

from page 1.97.1



Mountings for cylinders ISO 15552. Rear female clevises ISO MP2, rear eyes ISO MP4, Narrow rear clevises ISO AB6 and narrow rear eyes ISO MP6 with DIN 648K bearing, front clevises ISO MP7, flanges ISO-VDMA MF1/MF2, rear 90° hinges ISO AB7 CETOP RP107P and ISO 6431, in die-cast aluminium, sifting treatment.

Steel mountings for cylinders ISO 15552

from page 1.98.1



Mountings for cylinders ISO 15552. Rear female clevises ISO MP2, rear eyes ISO MP4, narrow rear female clevises ISO AB6 and narrow rear eye ISO MP6 with DIN 648K bearings, flanges ISO-VDMA MF1/MF2, rear 90° hinges ISO AB7 CETOP RP107P and ISO CS7 with DIN 648K bearings, low feet ISO MS1, pins ISO AA4 and ISO AA6, center trunnions ISO MT4 and ISO MT5/MT6, in AVP steel, in Fe 37 or in A105 steel, black cataphoresis or white zinc plating treatment.

Aluminium mountings for cylinders CNOMO

from page 1.99.1



Mountings for cylinders CNOMO. Rear female clevises, rear standard hinges, rear 90° hinges and high feet in die cast aluminium, sifting treatment.

Steel mountings for cylinders CNOMO

from page 1.99.50



Mountings for cylinders CNOMO. Flanges, low feet, pins and center trunnion in AVP steel, in Fe 37 or in A105 steel, white zinc plating treatment.

Aluminium mountings for compact cylinders ISO 21287

from page 1.100.1



Mountings for compact cylinders ISO 21287. Rear female clevis ISO MP2, rear male eye ISO MP4, narrow rear female clevises ISO AB6 and narrow rear male eye ISO MP6 with DIN 648K bearings, front clevises ISO MP7, flanges ISO-VDMA MF1/MF2, rear 90° hinges ISO AB7 CETOP RP107P and ISO 6431 in die cast aluminium, sifting treatment.

Steel mountings for compact cylinders ISO 21287

from page 1.100.50



Mountings for compact cylinders ISO 21287. Rear female clevis ISO MP2, rear male eye ISO MP4, narrow rear female clevises ISO AB6 and narrow rear male eye ISO MP6 with DIN 648K bearings, flanges ISO-VDMA MF1/MF2, rear 90° hinges ISO AB7 CETOP RP107P and ISO CS7 with DIN 648K bearings, low feet ISO MS1, pins ISO AA4 and ISO AA6, center trunnion ISO MT5/MT6, in AVP steel, in Fe 37 or in A105 steel, black cataphoresis or white zinc plating treatment.

Aluminium mountings for compact cylinders UNITOP — from page 1.100.100



Mountings for compact cylinders UNITOP. Rear female clevises ISO MP2, rear eyes ISO MP4, flanges ad rear 90° hinges ISO AB7 CETOP RP107P in die cast aluminium, sifting treatment.

Steel mountings for compact cylinders UNITOP — from page 1.100.150



Mountings for compact cylinders UNITOP. Rear female clevises ISO MP2, rear eyes ISO MP4, low feet, flanges and rear 90° hinges ISO AB7 CETOP RP107P in A105 steel A105, Fe 37, black cataphoresis treatment or white zinc plating treatment.

Aluminium mountings for short stroke cylinders — from page 1.100.200



Mountings for short stroke cylinders. Integrated rear male eye and feet in aluminium.

Aluminium mountings for rodless cylinders — from page 1.100.250



Mountings for rodless cylinders. Feet, mid support, end supports and felxible coupling in aluminium.

Mountings for hand grips — from page 1.100.350



Mountings for hand grips. Male and female in aluminium, plates in Stainless Steel.

Connecting bracket for slide units — from page 1.100.400



Connecting bracket for rods of slide units for cylinders ISO 15552.

Mounting screws, nuts e growers in steel for cylinders — from page 1.101.1



Mounting elements for cylinders. Scews conforming to UNI5931 standards, nuts conforming to UNI5589 and DIN 936 standards, growers conforming to DIN 127B standards, in steel.

Notes

Mounting accessories for cylinders

Mountings in steel for cylinders ISO 6432

Main features

8 ÷ 25 — Bores Ø

ISO MP3

CF — Type



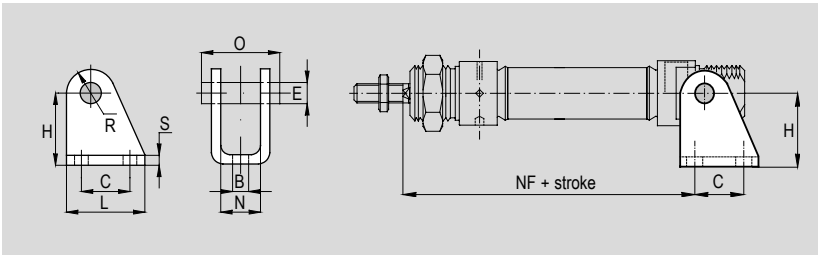

Technical data

Type	Description	Material	Treatment
CF..+P	Mounting for cylinders in steel. Rear clevis. Supplied with pin and two seeger.	Zinc plated steel	White zinc plating

Dimensions

For cylinder Ø mm	Code	Item	B	E	C	H	L	N	O	R	S	NF	Weight (g)
8	040048	CF08-10+P	4,5	4	12,5	24	20	8,1	17	5	2,5	62,5	42
10													
12	040049	CF12-16+P	5,5	6	15	27	25	12,1	23	7	3	73	75
16												80	
20	040050	CF20-25+P	6,6	8	20	30	32	16,1	29,5	10	4	91	78
25												100	

Main features

8 ÷ 25 — Bores Ø

ISO MS3

P — Type



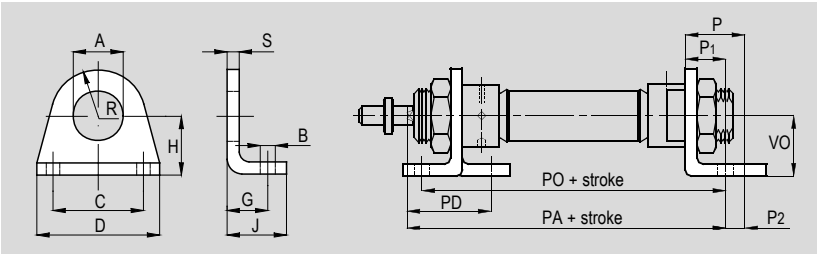

Technical data

Type	Description	Material	Treatment
P..	Mounting for cylinders in steel. High foot. For rear or front mounitng (head nut required. One head nut supplied with cylinders as standard). Supplied individually.	Zinc plated steel	White zinc plating

Dimensions

For cylinder Ø mm	Code	Item	A	B	C	D	G	H	J	R	S	PD	PO	PA	P	P_1	P_2	VO	Weight (g)
8	040021	P08-10	12	4,5	25	35	11	16	16	10	3	24	68	73	16	11	5	16	29
10																			
12	040022	P12-16	16	5,5	32	42	14	20	20	12,5	4	32	78	87	20	14	6	20	33
16													86	94					
20	040023	P20-25	22	6,6	40	54	17	25	25	20	5	36	93	100	25	17	8	25	41
25												40	98	109					

Mounting accessories for cylinders

Mountings in steel for cylinders ISO 6432

Main features

8 ÷ 25
Bores Ø

ISO
MF8

F
Type



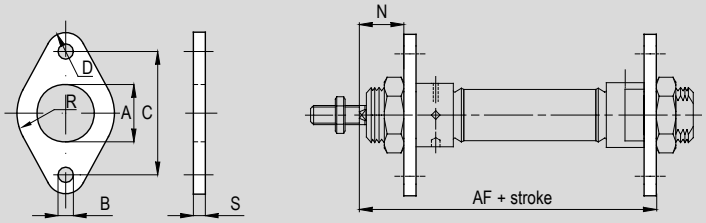

Technical data

Type	Description	Material	Treatment
F..	Mounting for cylinders in steel. Flange. For rear or front mounitng (head nut required. One head nut supplied with cylinders as standard). Supplied individually.	Zinc plated steel	White zinc plating

Dimensions

For cylinder Ø mm	Code	Item	A	B	C	R	D	S	N	AF	Weight (g)
8	040001	F08-10	12	4,5	30	11	5	3	13	65	25
10											
12	040002	F12-16	16	5,5	40	15	6	4	18	77	29
16											
20	040003	F20-25	22	6,6	50	20	8	5	19	88	35
25									23		

Mounting accessories for cylinders

Mountings in steel for round cylinders series M

Main features

32 ÷ 63
Bores Ø

P..AQM
Type



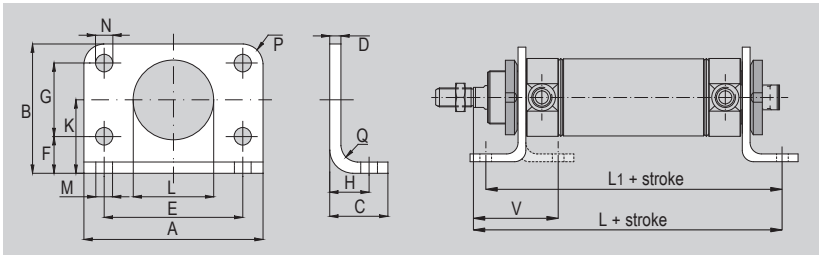

Technical data

Type	Description	Material	Treatment
P..AQM	Mounting for cylinders in steel. Foot-flange. For front or rear mounting (head nut type GH..AQM required, see below. One head nut supplied with cylinders as standard). Supplied individually.	Zinc plated steel	White zinc plating

Dimensions

For cylinder Ø mm	Code	Item	A	B	C	D	E	F	G	H	K	ØL	ØM	ØN	P	Q	V	L	L_1
32	040054	P032AQM	66	49	21	4	52	14	28	14	28	30	7	7	7	4	48	148	124
40	040055	P040AQM	80	58	30	5	60	18	30	20	33	38	9	9	10	5	60	178	153
50	040056	P050AQM	90	70	30	6	70	20	40	20	40	45	9	9	10	6	64	190	160
63	040057	P063AQM	96	80	30	6	76	20	50	20	45	45	9	9	10	6	65	-	164

Main features

32 ÷ 63
Bores Ø

GH..AQM
Type



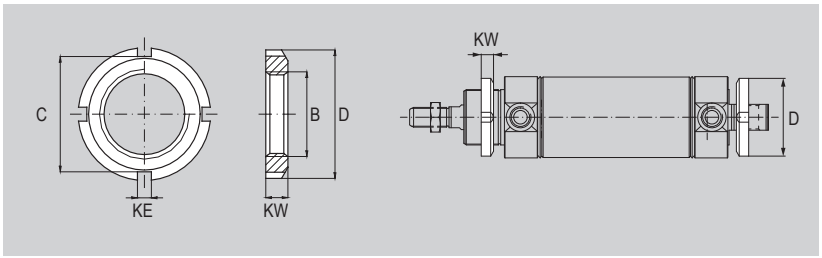

Technical data

Type	Description	Material	Treatment
GH..AQM	Mounting for cylinders in steel. Head nut. For front or rear mounting. Supplied individually.	Zinc plated steel	White zinc plating

Dimensions

For cylinder Ø mm	Code	Item	ØD	B	C	KW	KE
32	040066	GH032AQM	45	M30x1,5	40	7	5
40	040067	GH040AQM	50	M38x1,5	46	8	5
50-63	040068	GH050/063AQM	58	M45x1,5	52	9	6

Mounting accessories for cylinders

Mountings in steel for round cylinders series M

Main features

8 ÷ 25	ISO	CF..M
Bores Ø	MP3	Type



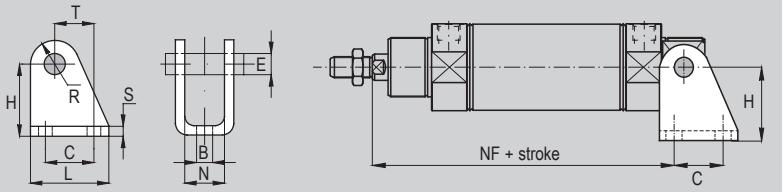

Technical data

Type	Description	Material	Treatment
CF..M	Mounting for cylinders in steel. Rear clevis. Supplied with pin and two seeger.	Zinc plated steel	White zinc plating

Dimensions

For cylinder Ø mm	Code	Item	B	E	C	H	L	N	T	R	S	NF	Weight (g)
32	040212	CF32M	6,6	10	24	35	35	16,1	18,5	11	4	113	106
40	040213	CF40M	9	12	30	40	45	18,1	23,5	13	5	135,1	185
50	040214	CF50-63M	9	16	34	45	50	21,1	28	14	6	143,2	283
63												152,2	

Mounting accessories for cylinders

Mountings in steel for round cylinders series R

Main features

32 ÷ 63
Bores Ø

CF..AQM
Type



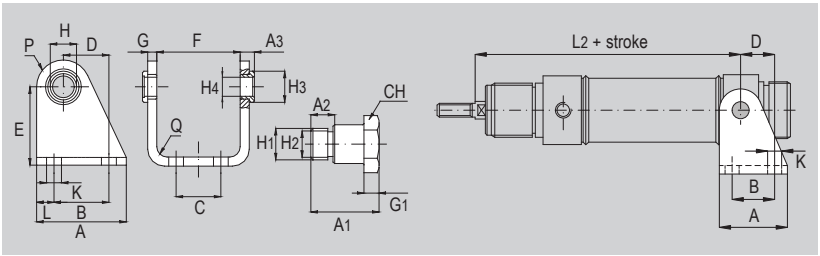

Technical data

Type	Description	Material	Treatment
CF..AQM+P	Mounting for cylinders in steel. Rear clevis. For front or rear mounting. Supplied with two pins.	Zinc plated steel	White zinc plating

Dimensions

For cylinder Ø mm	Code	Item	A	A_1	A_2	A_3	B	C	D	E	F	G	G_1	H	H_1	H_2	H_3	H_4	CH	K	L	P	Q	L_3
32	040058	CF032AQM+P	40	18	6	6	24	20	20	35	38,1	4	4	12	10	M8x1	15	10	13	7	8	12	4	125
40	040059	CF040AQM+P	50	21,6	7	7	30	28	27	40	46,1	5	5	15	12	M10x1	20	12	17	9	10	13	5	146
50	040060	CF050AQM+P	54	26,4	9	8,5	34	36	30	45	57,1	6	6	18	14	M12x1,5	23	14	19	9	10	14	6	158
63	040061	CF063AQM+P	65	31,5	13	8,5	35	42	34	50	70,1	6	6	20	16	M14x1,5	23	16	19	9	15	16	6	161

Main features

32 ÷ 63
Bores Ø

P..AQM
Type



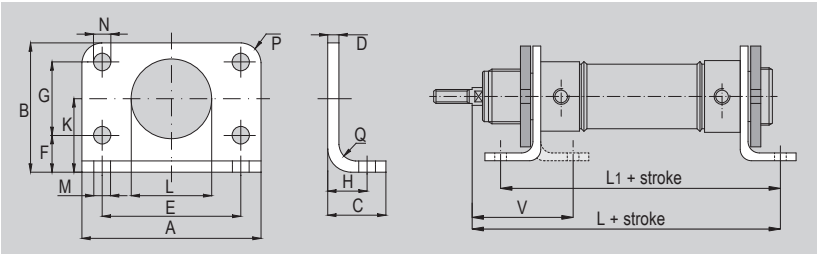

Technical data

Type	Description	Material	Treatment
P..AQM	Mounting for cylinders in steel. Foot-flange. For front or rear mounting (head nut type GH..AQM required, see page 1.96.2. One head nut supplied with cylinders as standard). Supplied individually.	Zinc plated steel	White zinc plating

Dimensions

For cylinder Ø mm	Code	Item	A	B	C	D	E	F	G	H	K	ØL	ØM	ØN	P	Q	V	L	L_1
32	040054	P032AQM	66	49	21	4	52	14	28	14	28	30	7	7	7	4	48	148	124
40	040055	P040AQM	80	58	30	5	60	18	30	20	33	38	9	9	10	5	60	178	153
50	040056	P050AQM	90	70	30	6	70	20	40	20	40	45	9	9	10	6	64	190	160
63	040057	P063AQM	96	80	30	6	76	20	50	20	45	45	9	9	10	6	65	-	164

Mounting accessories for cylinders

Mountings in steel for round cylinders series R

Main features

32 ÷ 63
Bores Ø

CP..AQM
Type



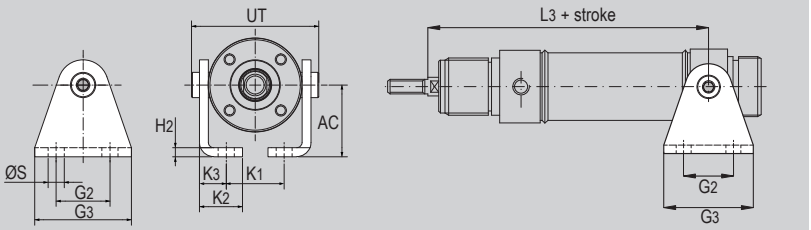

Technical data

Type	Description	Material	Treatment
CP..AQM+P	Mounting for cylinders in steel. Foot-hinges. For front or rear mounting. Kit composed by two foot-hinges and two pins.	Zinc plated steel	White zinc plating

Dimensions

For cylinder Ø mm	Code	Item	ØS	G_2	G_3	H_2	K_1	K_2	K_3	AC	UT	L_3
32	040170	CP032AQM+P	7	20	35	4	15,5	20	13	25	47	125
40	040171	CP040AQM+P	7	28	42	4	23,5	20	13	28	57	146
50	040172	CP050AQM+P	9	30	54	5	32,3	24	15	40	71	158
63	040173	CP063AQM+P	9	40	64	5	40,5	26,5	17,5	47	84	161

Main features

32 ÷ 63
Bores Ø

GH..AQM
Type



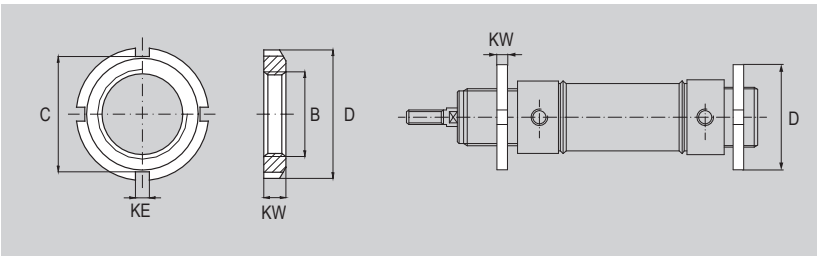

Technical data

Type	Description	Material	Treatment
GH..AQM	Mounting for cylinders in steel. Head nut. For front or rear mounting. Supplied individually.	Zinc plated steel	White zinc plating

Dimensions

For cylinder Ø mm	Code	Item	ØD	B	C	KW	KE
32	040066	GH032AQM	45	M30x1,5	40	7	5
40	040067	GH040AQM	50	M38x1,5	46	8	5
50-63	040068	GH050/063AQM	58	M45x1,5	52	9	6

Mounting accessories for cylinders

Mountings in steel for round cylinders series R

Main features

32 ÷ 63
Bores Ø

SEC..AQM
Type



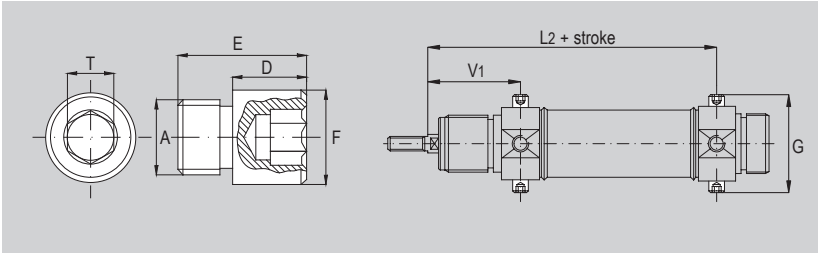

Technical data

Type	Description	Material	Treatment
SEC..AQM	Mounting for cylinders in steel. Pin. For front or rear mounting. Kit composed by two pins.	Zinc plated steel	White zinc plating

Dimensions

For cylinder Ø mm	Code	Item	A	D	E	F	T	G	V_1	L_2
32	040062	SEC032AQM	M8x1	8	14	Ø 10	5	51	47	125
40	040063	SEC040AQM	M10x1	9,5	16,5	Ø 12	6	61	57	146
50	040064	SEC050AQM	M12x1,5	11	20	Ø 14	6	75	62	158
63	040065	SEC063AQM	M14x1,5	13	28	Ø 16	8	92	63	161

Notes

Mounting accessories for cylinders

Mountings in aluminium for cylinders ISO 15552

Main features

32 ÷ 320 | ISO | CF..ALIS+VP

Bores Ø | MP2 | Type



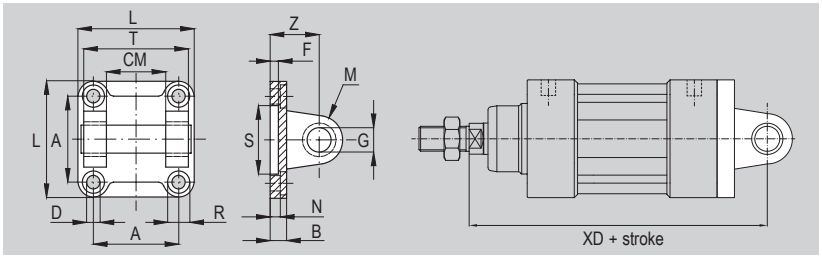

Technical data

Type	Description	Material	Treatment
CF..ALIS+VP	Mounting for cylinders in aluminium. Rear clevis. Supplied with screws and pin.	Die-cast aluminium	Sifting

Dimensions

For cylinder Ø mm	Code	Item	A	L	D	R	N	B	S	F	Z	G	M	CM	T	XD	Weight (g)
32	042050	CF032ALIS+VP	32,5	45	6,6	11	5,5	9	30	5	22	10	10	26	45	142	-
40	042051	CF040ALIS+VP	38	52	6,6	11	5,5	9	35	5	25	12	12	28	52	160	-
50	042052	CF050ALIS+VP	46,5	65	9	15	6,5	11	40	5	27	12	12	32	60	170	-
63	042053	CF063ALIS+VP	56,5	75	9	15	6,5	11	45	5	32	16	16	40	70	190	-
80	042054	CF080ALIS+VP	72	95	11	18	10	14	45	5	36	16	16	50	90	210	-
100	042055	CF100ALIS+VP	89	115	11	18	10	14	55	5	41	20	20	60	110	230	-
125	042056	CF125ALIS+VP	110	140	14	20	10	20	60	7	50	25	25	70	130	275	-
160	042057	CF160ALIS+VP	140	180	18	26	10	20	65	7	55	30	25	90	170	315	-
200	042058	CF200ALIS+VP	175	220	18	26	11	25	75	7	60	30	25	90	170	335	-
250	042059	CF250ALIS+VP	220	270	22	33	11	25	90	11	70	40	40	110	200	375	-
320	042060	CF320ALIS+VP	270	350	26	39	15	30	110	11	80	45	45	120	220	420	-

Main features

32 ÷ 320 | ISO | CF..ALIS+V

Bores Ø | MP2 | Type



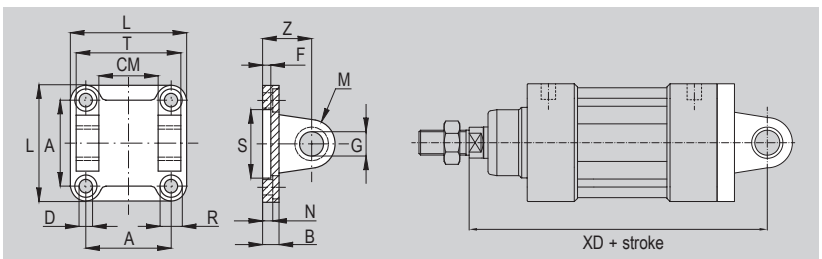

Technical data

Type	Description	Material	Treatment
CF..ALIS+V	Mounting for cylinders in aluminium. Rear clevis. Supplied with screws.	Die-cast aluminium	Sifting

Dimensions

For cylinder Ø mm	Code	Item	A	L	D	R	N	B	S	F	Z	G	M	CM	T	XD	Weight (g)
32	040441	CF032ALIS+V	32,5	45	6,6	11	5,5	9	30	5	22	10	10	26	45	142	-
40	040442	CF040ALIS+V	38	52	6,6	11	5,5	9	35	5	25	12	12	28	52	160	-
50	040443	CF050ALIS+V	46,5	65	9	15	6,5	11	40	5	27	12	12	32	60	170	-
63	040444	CF063ALIS+V	56,5	75	9	15	6,5	11	45	5	32	16	16	40	70	190	-
80	040445	CF080ALIS+V	72	95	11	17	10	14	45	5	36	16	16	50	90	210	-
100	040446	CF100ALIS+V	89	115	11	18	10	14	55	5	41	20	20	60	110	230	-
125	040447	CF125ALIS+V	110	140	14	20	10	20	60	7	50	25	25	70	130	275	-
160	040448	CF160ALIS+V	140	180	18	26	10	20	65	7	55	30	25	90	170	315	-
200	040449	CF200ALIS+V	175	220	18	26	11	25	75	7	60	30	25	90	170	335	-
250	040450	CF250ALIS+V	220	270	22	33	11	25	90	11	70	40	40	110	200	375	-
320	040459	CF320ALIS+V	270	350	26	39	15	30	110	11	80	45	45	120	220	420	-

Mounting accessories for cylinders

Mountings in aluminium for cylinders ISO 15552

Main features

32 ÷ 250 ISO CFS..ALIS+VP

Bores Ø AB6 Type



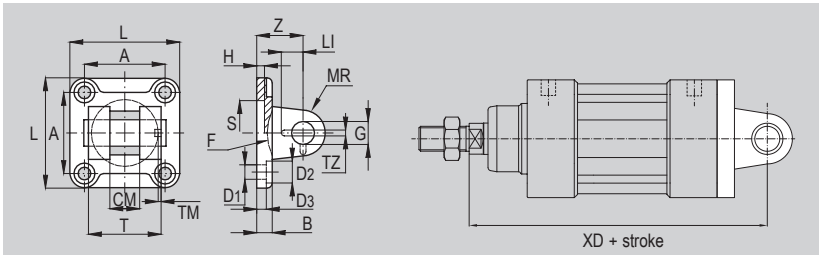

Technical data

Type	Description	Material	Treatment
CFS..ALIS+VP	Mounting for cylinders in aluminium. Narrow rear clevis (for DIN 648K bearings). Supplied with screws and anti-rotating pin.	Die-cast aluminium	Sifting

Dimensions

For cylinder Ø mm	Code	Item	L	T	CM	A	Z	H	B	D_3	S	G	MR	D_1	D_2	TM	TZ	LI	F	XD	Weight (g)
32	042110	CFS032ALIS+VP	45	34	14	32,5	22	5	9	5,5	30	10	10	6,6	11	3	3,3	11,5	17	142	-
40	042111	CFS040ALIS+VP	52	40	16	38	25	5	9	5,5	35	12	12	6,6	11	4	4,3	12	20	160	-
50	042112	CFS050ALIS+VP	65	45	21	46,5	27	5	11	6,5	40	16	14	9	15	4	4,3	14	22	170	-
63	042113	CFS063ALIS+VP	75	51	21	56,5	32	5	11	6,5	45	16	18	9	15	4	4,3	14	25	190	-
80	042114	CFS080ALIS+VP	95	65	25	72	36	5	14	10	45	20	20	11	18	4	4,3	16	30	210	-
100	042115	CFS100ALIS+VP	115	75	25	89	41	5	14	10	55	20	22	11	18	4	6,3	16	32	230	-
125	042116	CFS125ALIS+VP	140	97	37	110	50	7	20	10	60	30	25	14	20	6	6,3	24	42	275	-
160	042117	CFS160ALIS+VP	180	122	43	140	55	7	20	10	65	35	30	18	26	6	6,3	26,5	46	315	-
200	042118	CFS200ALIS+VP	220	122	43	175	60	7	25	11	75	35	30	18	26	6	6,3	26,5	49	335	-
250	042148	CFS250ALIS+VP	270	125	49	220	70	11	25	11	90	40	40	22	33	8,5	8,3	32	55	375	-

Main features

32 ÷ 250 ISO CFS..ALIS+V

Bores Ø AB6 Type



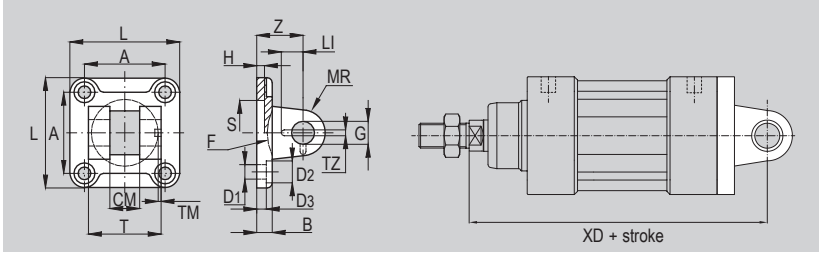

Technical data

Type	Description	Material	Treatment
CFS..ALIS+V	Mounting for cylinders in aluminium. Narrow rear clevis (for DIN 648K bearings). Supplied with screws.	Die-cast aluminium	Sifting

Dimensions

For cylinder Ø mm	Code	Item	L	T	CM	A	Z	H	B	D_3	S	G	MR	D_1	D_2	TM	TZ	LI	F	XD	Weight (g)
32	040451	CFS032ALIS+V	45	34	14	32,5	22	5	9	5,5	30	10	10	6,6	11	3	3,3	11,5	17	142	-
40	040452	CFS040ALIS+V	52	40	16	38	25	5	9	5,5	35	12	12	6,6	11	4	4,3	12	20	160	-
50	040453	CFS050ALIS+V	65	45	21	46,5	27	5	11	6,5	40	16	14	9	15	4	4,3	14	22	170	-
63	040454	CFS063ALIS+V	75	51	21	56,5	32	5	11	6,5	45	16	18	9	15	4	4,3	14	25	190	-
80	040455	CFS080ALIS+V	95	65	25	72	36	5	14	10	45	20	20	11	18	4	4,3	16	30	210	-
100	040456	CFS100ALIS+V	115	75	25	89	41	5	14	10	55	20	22	11	18	4	6,3	16	32	230	-
125	040457	CFS125ALIS+V	140	97	37	110	50	7	20	10	60	30	25	14	20	6	6,3	24	42	275	-
160	040458	CFS160ALIS+V	180	122	43	140	55	7	20	10	65	35	30	18	26	6	6,3	26,5	46	315	-
200	040498	CFS200ALIS+V	220	122	43	175	60	7	25	11	75	35	30	18	26	6	6,3	26,5	49	335	-
250	040499	CFS250ALIS+V	270	125	49	220	70	11	25	11	90	40	40	22	33	8,5	8,3	32	55	375	-

Mounting accessories for cylinders

Mountings in aluminium for cylinders ISO 15552

Main features

32 ÷ 320 ISO CM..ALIS+V

Bores Ø MP4 Type



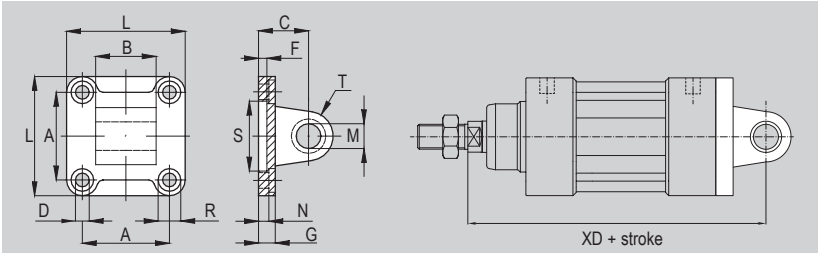

Technical data

Type	Description	Material	Treatment
CM..ALIS+V	Mounting for cylinders in aluminium. Rear eye. Supplied with screws.	Die-cast aluminium	Sifting

Dimensions

For cylinder Ø mm	Code	Item	A	L	D	R	N	G	S	F	C	M	T	B		XD	Weight (g)
32	042061	CM032ALIS+V	32,5	45	6,6	11	5,5	9	30	5	22	10	10	26		142	-
40	042062	CM040ALIS+V	38	52	6,6	11	5,5	9	35	5	25	12	12	28		160	-
50	042063	CM050ALIS+V	46,5	65	9	15	6,5	11	40	5	27	12	12	32	-0,2	170	-
63	042064	CM063ALIS+V	56,5	75	9	15	6,5	11	45	5	32	16	16	40	-0,6	190	-
80	042065	CM080ALIS+V	72	95	11	18	10	14	45	5	36	16	16	50		210	-
100	042066	CM100ALIS+V	89	115	11	18	10	14	55	5	41	20	20	60		230	-
125	042067	CM125ALIS+V	110	140	14	20	10	20	60	7	50	25	25	70		275	-
160	042068	CM160ALIS+V	140	180	18	26	10	20	65	7	55	30	25	90		315	-
200	042069	CM200ALIS+V	175	220	18	26	11	25	75	7	60	30	25	90	-0,5 -1,2	335	-
250	042070	CM250ALIS+V	220	270	22	33	11	25	90	11	70	40	40	110		375	-
320	042071	CM320ALIS+V	270	350	26	39	15	30	110	11	80	50	45	120		420	-

Main features

32 ÷ 200 ISO CFA..ALIS+V

Bores Ø MP2 Type



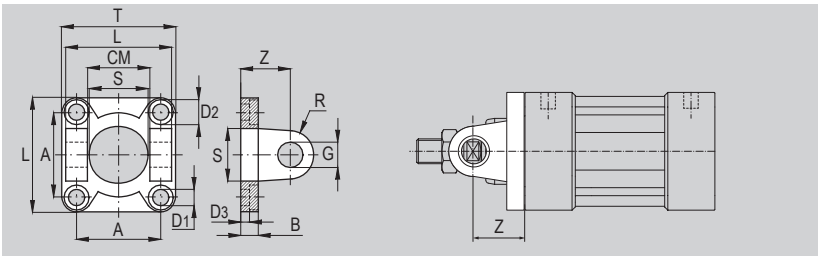

Technical data

Type	Description	Material	Treatment
CFA..ALIS+V	Mounting for cylinders in aluminium. Front clevis. Supplied with screws.	Die-cast aluminium	Sifting

Dimensions

For cylinder Ø mm	Code	Item	A	T	D_1	D_2	D_3	B	S	Z	G	R	CM	L	Weight (g)
32	040473	CFA032ALIS+V	32,5	45	6,6	11	5,5	9	30	22	10	10	26	45	74
40	040474	CFA040ALIS+V	38	52	6,6	11	5,5	9	35	25	12	12	28	52	101
50	040017	CFA050ALIS+V	46,5	60	9	15	6,5	11	40	27	12	12	32	65	178
63	040471	CFA063ALIS+V	56,5	70	9	15	6,5	11	45	32	16	16	40	75	246
80	040051	CFA080ALIS+V	72	90	11	18	10	14	45	36	16	16	50	95	482
100	040478	CFA100ALIS+V	89	110	11	18	10	14	55	41	20	20	60	115	722
125	040475	CFA125ALIS+V	110	130	14	20	10	20	60	50	25	25	70	140	1323
160	040477	CFA160ALIS+V	140	170	18	26	10	20	65	55	30	25	90	180	2090
200	040479	CFA200ALIS+V	175	170	18	26	11	25	75	60	30	25	90	220	3210

Mounting accessories for cylinders

Mountings in aluminium for cylinders ISO 15552

Main features

32 ÷ 320 ISO CMS..ALIS+V

Bores Ø MP6 Type

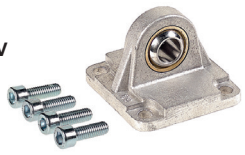

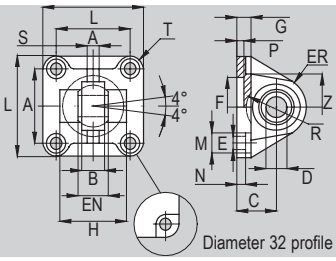

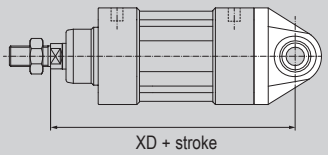

Technical data

Type	Description	Material	Treatment
CMS..ALIS+V	Mounting for cylinders in aluminium. Narrow rear eye with spherical bearing DIN 648K. Supplied with screws.	Die-cast aluminium	Sifting

Dimensions

For cylinder Ø mm	Code	Item	A	B	C	D	EN	ER	F	G	E	L	M	N	P	H	R	S	Z	T	XD	Weight (g)
32	042101	CMS032ALIS+V	32,5	10,5	22	10	14	16	30	9	6,6	45	11	5,5	5	-	-	4	32,5	6,25	142	-
40	042102	CMS040ALIS+V	38	12	25	12	16	19	35	9	6,6	52	11	5,5	5	-	-	6	39	7	160	-
50	042103	CMS050ALIS+V	46,5	15	27	16	21	21	40	11	9	65	15	6,5	5	51	18	8	47	9,25	170	-
63	042104	CMS063ALIS+V	56,5	15	32	16	21	24	45	11	9	75	15	6,5	5	-	-	8	52	9,25	190	-
80	042105	CMS080ALIS+V	72	18	36	20	25	28,5	45	14	11	95	18	10	5	72	24	10	67	11,5	210	-
100	042106	CMS100ALIS+V	89	18	41	20	25	30	55	14	11	115	18	10	5	-	-	10	77	13	230	-
125	042107	CMS125ALIS+V	110	25	50	30	37	40	60	20	13,5	140	20	10	7	-	-	13	98	15	275	-
160	042108	CMS160ALIS+V	140	28	55	35	43	45	65	20	18	180	26	10	7	-	-	14	130	20	315	-
200	042109	CMS200ALIS+V	175	28	60	35	43	48	75	25	18	220	26	11	7	-	-	14	155	22,5	335	-
250	040160	CMS250ALIS+V	220	33	70	40	49	52	90	25	22	270	33	11	11	-	-	19	205	25	375	-
320	040197	CMS320ALIS+V	270	45	80	50	60	63	110	30	22	350	33	11	11	-	-	-	-	28	420	-

Main features

32 ÷ 200 ISO FLV..ALIS+V

Bores Ø VDMA MF1/MF2 Type



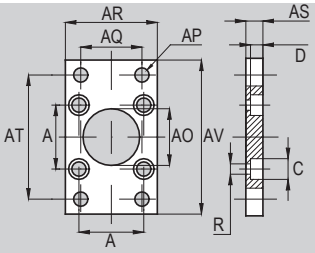

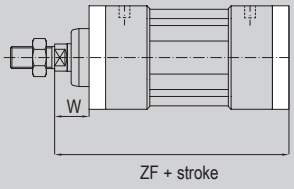

Technical data

Type	Description	Material	Treatment
FLV..ALIS+V	Mounting for cylinders in aluminium. Flange. For front or rear mounting. Supplied with screws.	Die-cast aluminium	Anodizing

Dimensions

For cylinder Ø mm	Code	Item	A	ØAP	AO	R	AS	AR	AQ	AT	AV	C	D	ZF	W	Weight (g)
32	042150	FLV032ALIS+V	32,5	7	30	6,5	10	45	32	64	86	10,5	5	130	16	-
40	042151	FLV040ALIS+V	38	9	35	6,5	10	52	36	72	96	11	5	145	20	-
50	042152	FLV050ALIS+V	46,5	9	40	9	12	65	45	90	115	15	5,5	155	25	-
63	042153	FLV063ALIS+V	56,5	9	45	9	12	75	50	100	130	15	5,5	170	25	-
80	042154	FLV080ALIS+V	72	12	45	11	16	95	63	126	165	18	7	190	30	-
100	042155	FLV100ALIS+V	89	14	55	11	16	115	75	150	187	18	7	205	35	-
125	042156	FLV125ALIS+V	110	16	60	13	20	140	90	180	224	19	9,5	245	45	-
160	042157	FLV160ALIS+V	140	18	65	17	20	180	115	230	280	25	10,5	280	60	-
200	042158	FLV200ALIS+V	175	22	75	17	25	220	135	270	320	25	9,5	300	70	-

Mounting accessories for cylinders

Mountings in aluminium for cylinders ISO 15552

Main features

32 ÷ 250 ISO ASV..ALIS+V

Bores Ø AB7 Type

cetop RP 107P



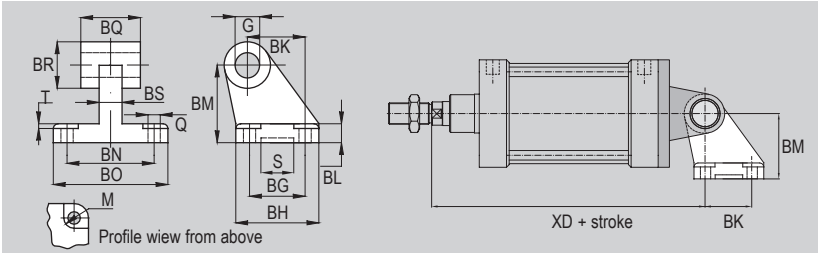

Technical data

Type	Description	Material	Treatment
ASV..ALIS+V	Mounting for cylinders in aluminium. Rear 90° hinge. For mounting with rear female clevis type CF. Supplied with screws.	Die-cast aluminium	Sifting

Dimensions

For cylinder Ø mm	Code	Item	Q	M	BG	BH	BK	BL	BM	BN	BO	BS	BR	G	T	S	BQ		XD	Weight (g)
32	042081	ASV032ALIS+V	6,6	11	18	31	21	8	32	38	51	10	20	10	1,6	10,5	26		142	56
40	042082	ASV040ALIS+V	6,6	11	22	35	24	10	36	41	54	15	22	12	1,6	10,5	28		160	139
50	042083	ASV050ALIS+V	9	15	30	45	33	12	45	50	65	16	26	12	1,6	10,5	32	-0,2	170	142
63	042084	ASV063ALIS+V	9	15	35	50	37	14	50	52	67	16	30	16	1,6	10,5	40	-0,6	190	200
80	042085	ASV080ALIS+V	11	18	40	60	47	14	63	66	86	20	30	16	2,5	10,5	50		210	312
100	042086	ASV100ALIS+V	11	18	50	70	55	17	71	76	96	20	38	20	2,5	10,5	60		230	656
125	042087	ASV125ALIS+V	14	20	60	90	70	20	90	94	124	30	45	25	3,2	10,5	70		275	826
160	042088	ASV160ALIS+V	14	20	88	126	97	25	115	118	156	36	63	30	4	-	90	-0,5	315	2600
200	042089	ASV200ALIS+V	18	26	90	130	105	30	135	122	162	40	63	40	4	-	90	-1,2	335	3250
250	042090	ASV250ALIS+V	22	33	110	160	128	35	165	150	200	45	80	42	4,5	-	110		375	5700

Main features

32 ÷ 250 cetop ASF..ALIS+V

Bores Ø RP 107P Type



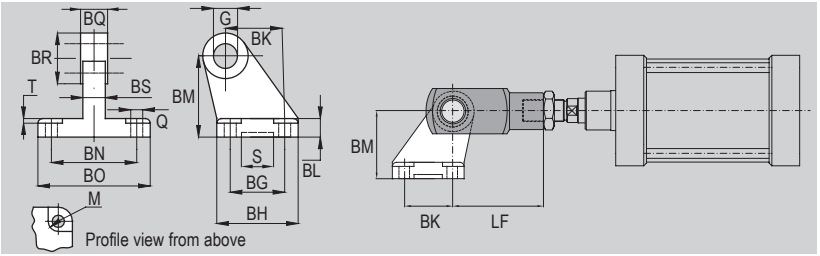

Technical data

Type	Description	Material	Treatment
ASF..ALIS	Mounting for cylinders in aluminium. Clevis hinge. For mounting with rod clevis type FF.	Die-cast aluminium	Sifting

Dimensions

For cylinder Ø mm	Code	Item	Q	M	BG	BH	BK	BL	BM	BN	BO	BS	BR	G	T	S	BQ		LF	Weight (g)
32	042161	ASF032ALIS+V	6,6	11	18	31	21	8	32	38	51	9,4	20	10	1,6	10,5	10		40	69
40	042162	ASF040ALIS+V	6,6	11	22	35	24	10	36	41	54	15	-	12	1,6	10,5	12		40	94
50	042163	ASF050ALIS+V	9	15	30	45	33	12	45	50	65	15,4	26	16	1,6	10,5	16		48	169
63	042164	ASF063ALIS+V	9	15	35	50	37	14	50	52	67	15,4	30	16	1,6	10,5	16		64	223
80	042165	ASF080ALIS+V	11	18	40	60	47	14	63	66	86	19,4	30	20	2,5	10,5	20	-0,2	64	362
100	042166	ASF100ALIS+V	11	18	50	70	55	17	71	76	96	19,4	38	20	2,5	10,5	20	-0,6	80	528
125	042167	ASF125ALIS+V	14	20	60	90	70	20	90	94	124	30	45	25/30	3,2	10,5	25/30		110	943
160	042168	ASF160ALIS+V	14	20	88	126	97	25	115	118	156	36	63	35	4	-	35		144	2810
200	042169	ASF200ALIS+V	18	26	90	130	105	30	135	122	162	40	63	35	4	-	35		144	3410
250	042170	ASF250ALIS+V	22	33	110	160	128	35	165	150	200	45	80	42	4,5	-	42		168	6580

Mounting accessories for cylinders

Mountings in aluminium for cylinders ISO 15552

Main features

32 ÷ 200 — Bores Ø

ISO 6431

AS..ALIS — Type



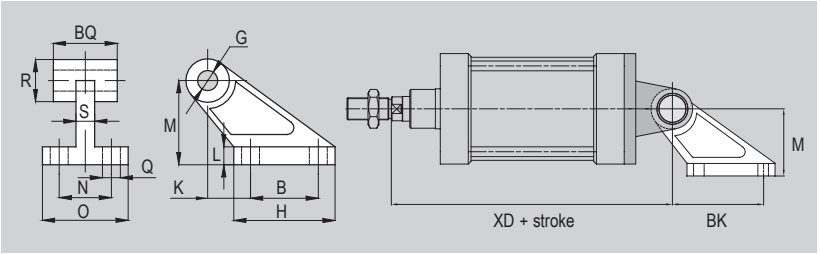

Technical data

Type	Description	Material	Treatment
AS..ALIS	Mountings for cylinders in aluminium. Rear 90° hinge. For mounting with rear female clevis type CF. Mounting screws to be ordered separately see page 1.101.1	Die-cast aluminium	Sifting

Dimensions

For cylinder Ø mm	Code	Item	Q	B	H	K	L	M	N	O	S	R	BQ	G	XD	BK	Weight (g)
32	040361	AS032ALIS	7	20	37	18	8	32	25	41	9	19	26	10	142	38	54
40	040362	AS040ALIS	9	32	54	25	10	45	32	52	14	25,5	28	12	160	57	136
50	040363	AS050ALIS	9	32	54	25	10	45	32	52	14	25,5	32	12	170	57	140
63	040364	AS063ALIS	11	50	75	32	12	63	40	63	14	32	40	16	190	82	295
80	040365	AS080ALIS	11	50	75	32	12	63	40	63	14	32	50	16	210	82	313
100	040366	AS100ALIS	14	70	103	40	17	90	50	80	22	42	60	20	230	110	710
125	040367	AS125ALIS	14	70	103	40	17	90	50	80	22	46	70	25	275	110	820
160	040368	AS160ALIS	18	110	154	50	20	140	63	110	26	53,5	89	30	315	160	1974
200	040369	AS200ALIS	18	110	154	50	20	140	63	110	26	53,5	89	30	335	160	1974

Main features

32 ÷ 200 — Bores Ø

ISO MS3

P..ALIS — Type



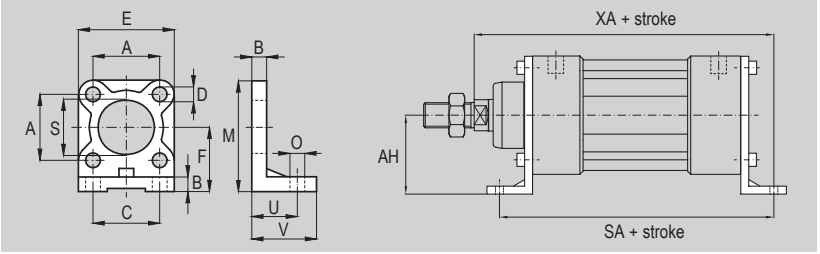

Technical data

Type	Description	Material	Treatment
P..ALIS	Mounting for cylinders in aluminium. Foot. For front or rear mounting. Supplied individually. Mounting screws to be ordered separately see page 1.101.1	Die-cast aluminium	Sifting

Dimensions

For cylinder Ø mm	Code	Item	A	B	C	D	E	F	M	O	S	U	V	AH	XA	SA	Weight (g)
32	040141	P032ALIS	32,5	8	32	7	40	32	54,5	7	30	24	35	31,5	154	138	46
40	040142	P040ALIS	38	8	36	7	52	36	62	9	35	28	35	34	173	161	66
50	040143	P050ALIS	46,5	10	45	9	65	45	77,5	9	40	32	45	42,5	187	170	138
63	040144	P063ALIS	56,5	10	50	9	75	50	87,5	9	45	32	45	47,5	202	185	174
80	040145	P080ALIS	72	12	63	11	95	63	110,5	12	45	41	55	59,5	231	210	356
100	040146	P100ALIS	89	12	75	11	115	71	128	14	55	41	56	69,5	246	220	468
125	040147	P125ALIS	110	16	90	14	140	91	161	16	60	45	68	86	290	250	920
160	040148	P160ALIS	140	20	115	18	180	115	205	18	65	60	82	110	340	300	2300
200	040149	P200ALIS	175	20	135	18	220	135	245	22	75	70	90	130	370	320	3200

Mounting accessories for cylinders

Mountings in steel for cylinders ISO 15552

Main features

32 ÷ 320 ISO CF..AQIS+V

Bores Ø MP2 Type



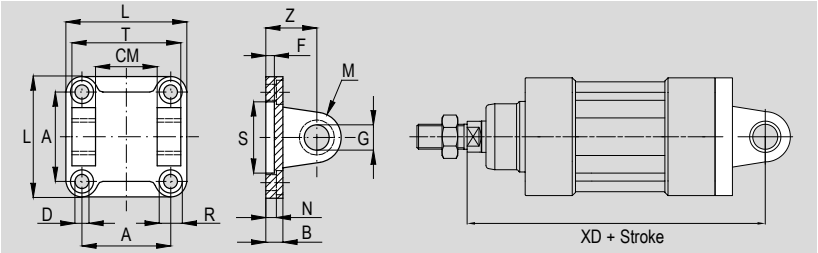

Technical data

Type	Description	Material	Treatment
CF..AQIS+V	Mounting for cylinders in steel. Rear clevis. Supplied with screws. Pin type SEC..AQIS to be ordered separately, see page 1.98.5	Steel A 105	Black cataphoresis

Dimensions

For cylinder Ø mm	Code	Item	A	L	D	R	N	B	S	F	Z	G	M	CM	T	XD	Weight (g)
32	040461	CF032AQIS+V	32,5	45	6,6	11	5,5	10	30	5	22	10	10	26	45	142	164
40	040462	CF040AQIS+V	38	55	6,6	11	5,5	10	35	5	25	12	12	28	52	160	256
50	040463	CF050AQIS+V	46,5	65	9	15	6,5	10	40	5	27	12	12	32	60	170	392
63	040464	CF063AQIS+V	56,5	75	9	15	6,5	12	45	5	32	16	16	40	70	190	594
80	040465	CF080AQIS+V	72	95	11	18	10	14	45	-	36	16	16	50	90	210	1102
100	040466	CF100AQIS+V	89	115	11	18	10	16	55	-	41	20	20	60	110	230	1802
125	040467	CF125AQIS+V	110	140	14	20	10	20	60	-	50	25	25	70	130	275	3493
160	040468	CF160AQIS+V	140	180	18	26	10	20	65	7	55	30	25	90	170	315	6060
200	040469	CF200AQIS+V	175	220	18	26	11	20	75	7	60	30	25	90	170	335	9210
250	040480	CF250AQIS+V	220	270	22	33	11	25	90	11	70	40	40	110	200	375	16460
320	040470	CF320AQIS+V	270	350	26	39	15	30	110	11	80	45	45	120	220	420	31830

Main features

32 ÷ 125 ISO CFS..AQIS+V

Bores Ø AB6 Type



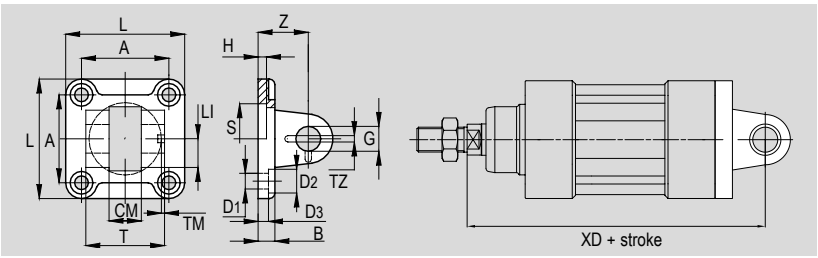

Technical data

Type	Description	Material	Treatment
CFS..AQIS+V	Mounting for cylinders in steel. Narrow rear clevis. Supplied with screws. Anti-rotating pin type SEC..ARAQIS to be ordered separately, see page 1.98.5	Steel A 105	Black cataphoresis

Dimensions

For cylinder Ø mm	Code	Item	L	T	CM	A	Z	H	B	D_3	S	G	D_1	D_2	TM	TZ	LI	XD	Weight (g)
32	040491	CFS032AQIS+V	45	34	14	32,5	22	5	10	5,5	30	10	6,6	11	3	3,3	11,5	142	166
40	040492	CFS040AQIS+V	55	40	16	38	25	5	10	5,5	35	12	6,6	11	4	4,3	12	160	256
50	040493	CFS050AQIS+V	65	45	21	46,5	27	5	10	6,5	40	16	9	15	4	4,3	14	170	390
63	040494	CFS063AQIS+V	75	51	21	56,5	32	5	12	6,5	45	16	9	15	4	4,3	14	190	600
80	040495	CFS080AQIS+V	95	65	25	72	36	5	14	10	45	20	11	18	4	4,3	16	210	1292
100	040496	CFS100AQIS+V	115	75	25	89	41	5	16	10	55	20	11	18	4	6,3	16	230	1942
125	040497	CFS125AQIS+V	140	97	37	110	50	7	20	10	60	30	14	20	6	6,3	24	275	3693

Mounting accessories for cylinders

Mountings in steel for cylinders ISO 15552

Main features

32 ÷ 320 ISO CM..AQIS+V

Bores Ø MP4 Type



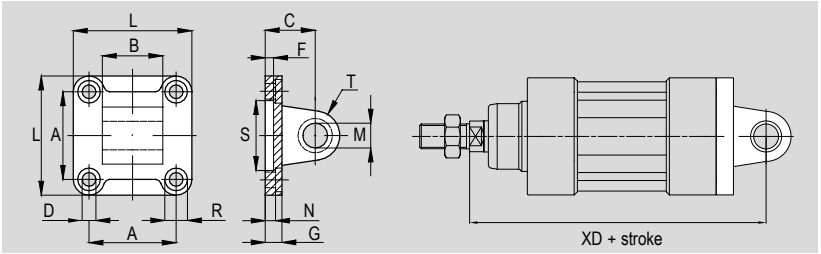

Technical data

Type	Description	Material	Treatment
CM..AQIS+V	Mounting for cylinders in steel. Rear eye. Supplied with screws.	Steel A 105	Black cataphoresis

Dimensions

For cylinder Ø mm	Code	Item	A	L	D	R	N	G	S	F	C	M	T	B		XD	Weight (g)
32	040521	CM032AQIS+V	32,5	45	6,6	11	5,5	10	30	5	22	10	10	26		142	202
40	040522	CM040AQIS+V	38	55	6,6	11	5,5	10	35	5	25	12	12	28		160	300
50	040523	CM050AQIS+V	46,5	65	9	15	6,5	10	40	5	27	12	12	32	-0,2	170	422
63	040524	CM063AQIS+V	56,5	75	9	15	6,5	12	45	5	32	16	16	40	-0,6	190	736
80	040525	CM080AQIS+V	72	95	11	18	10	14	45	5	36	16	16	50		210	1298
100	040526	CM100AQIS+V	89	115	11	18	10	16	55	5	41	20	20	60		230	2202
125	040527	CM125AQIS+V	110	140	14	20	10	20	60	7	50	25	25	70		275	3883
160	040528	CM160AQIS+V	140	180	18	26	10	20	65	7	55	30	25	90		315	6200
200	040529	CM200AQIS+V	175	220	18	26	11	20	75	7	60	30	25	90	-0,5	335	8780
250	040530	CM250AQIS+V	220	270	22	33	11	25	90	11	70	40	40	110	-1,2	375	17410
320	040539	CM320AQIS+V	270	350	26	39	15	30	110	11	80	45	45	120		420	32830

Main features

32 ÷ 125 ISO CMS..AQIS+V

Bores Ø MP6 Type



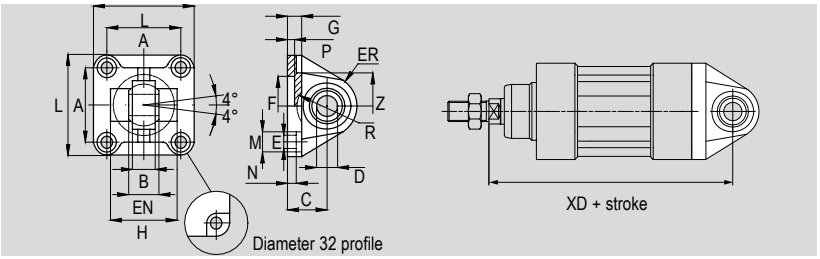

Technical data

Type	Description	Material	Treatment
CMS..AQIS+V	Mounting for cylinders in steel. Narrow rear eye with spherical bearing DIN 648K. Supplied with screws.	Steel A 105	Black cataphoresis

Dimensions

For cylinder Ø mm	Code	Item	A	B	C	D	EN	ER	F	G	E	L	M	N	P	H	R	Z	XD	Weight (g)
32	040531	CMS032AQIS+V	32,5	10,5	22	10	14	15	30	10	6,6	45	11	5,5	5	-	-	32,5	142	178
40	040532	CMS040AQIS+V	38	12	25	12	16	18	35	10	6,6	55	11	5,5	5	-	-	39	160	282
50	040533	CMS050AQIS+V	46,5	15	27	16	21	20	40	10	9	65	15	6,5	5	51	19	47	170	418
63	040534	CMS063AQIS+V	56,5	15	32	16	21	23	45	12	9	75	15	6,5	5	-	-	52	190	649
80	040535	CMS080AQIS+V	72	18	36	20	25	27	45	14	11	95	18	10	5	70	24	67	210	1224
100	040536	CMS100AQIS+V	89	18	41	20	25	30	55	16	11	115	18	10	5	-	-	77	230	1888
125	040537	CMS125AQIS+V	110	25	50	30	37	40	60	20	13,5	140	20	10	7	-	-	98	275	3643

Mounting accessories for cylinders

Mountings in steel for cylinders ISO 15552

Main features

32 ÷ 125 ISO ASV..AQIS

Bores Ø AB7 Type

cetop RP 107P



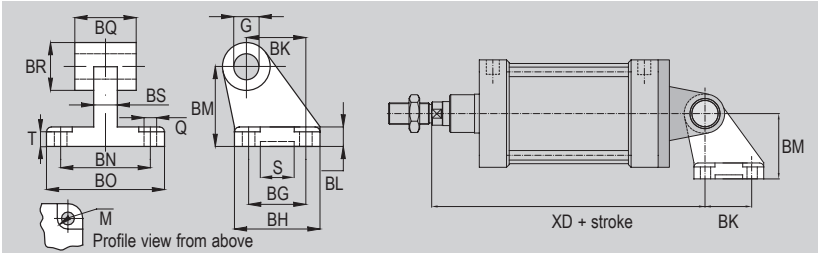

Technical data

Type	Description	Material	Treatment
ASV..AQIS	Mounting for cylinders in steel. Rear 90° hinge. For mounting with rear female clevis type CF. Mounting screws to be ordered separately, see page 1.101.1.	Steel A 105	Black cataphoresis

Dimensions

For cylinder Ø mm	Code	Item	Q	M	BG	BH	BK	BL	BM	BN	BO	BS	BR	G	T	S	BQ	XD	Weight (g)
32	040381	ASV032AQIS	6,6	11	18	31	21	8	32	38	51	10	20	10	6,5	20	26	142	184
40	040382	ASV040AQIS	6,6	11	22	35	24	10	36	41	54	10	22	12	8,5	20	28	160	264
50	040383	ASV050AQS	9	15	30	45	33	12	45	50	65	14	26	12	10,5	20	32	170	472
63	040384	ASV063AQIS	9	15	35	50	37	12	50	52	67	14	30	16	10,5	20	40	190	580
80	040385	ASV080AQIS	11	18	40	60	47	14	63	66	86	18	30	16	11,5	20	50	210	1157
100	040386	ASV100AQIS	11	18	50	70	55	15	71	76	96	20	36	20	12,5	20	60	230	1612
125	040387	ASV125AQIS	14	20	60	90	70	20	90	94	124	30	45	25	17	20	70	275	3293

Main features

32 ÷ 125 ISO ASS..AQIS

Bores Ø CS7 Type



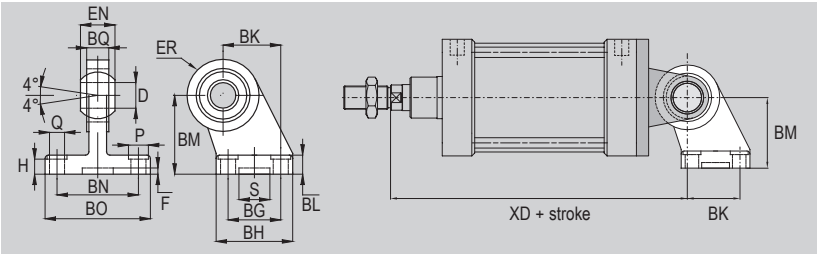

Technical data

Type	Description	Material	Treatment
ASS..AQIS	Mounting for cylinders in steel. Rear 90° hinge with spherical bearing DIN 648K. For mounting with rear female clevis type CFS. Mounting screws to be ordered separately see page 1.101.1	Steel A 105	Black cataphoresis

Dimensions

For cylinder Ø mm	Code	Item	Q	P	BG	BH	BK	BL	BM	BN	BO	EN	ER	BQ	D	H	S	F	XD	Weight (g)
32	040551	ASS032AQIS	6,6	11	18	31	21	10	32	38	51	14	15	10,5	10	8,5	30	5	142	178
40	040552	ASS040AQIS	6,6	11	22	35	24	10	36	41	54	16	18	12	12	8,5	30	5	160	268
50	040553	ASS050AQS	9	15	30	45	33	12	45	50	65	21	20	15	16	10,5	30	5	170	458
63	040554	ASS063AQIS	9	15	35	50	37	12	50	52	67	21	23	15	16	10,5	30	5	190	550
80	040555	ASS080AQIS	11	18	40	60	47	14	63	66	86	25	27	18	20	11,5	30	5	210	970
100	040556	ASS100AQIS	11	18	50	70	55	15	71	76	96	25	30	18	20	12,5	30	5	230	1326
125	040557	ASS125AQIS	13,5	20	60	90	70	20	90	94	124	37	40	25	30	17	30	5	275	3000

Mounting accessories for cylinders

Mountings in steel for cylinders ISO 15552

Main features

32 ÷ 320 ISO FLV..AQIS+V

Bores Ø VDMA Type

MF1/MF2



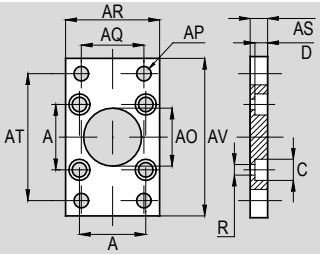

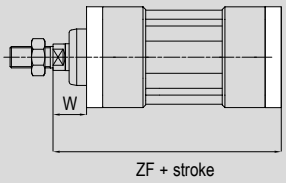

Technical data

Type	Description	Material	Treatment
FLV..AQIS+V	Mounting for cylinders in steel. Flange. For front or rear mounting. Supplied with screws.	Fe 37	White zinc plating

Dimensions

For cylinder Ø mm	Code	Item	A	ØAP	AO	R	AS	AR	AQ	AT	AV	C	D	ZF	W	Weight (g)
32	042119	FLV032AQIS+V	32,5	7	30	6,5	10	45	32	64	86	10,5	5	130	16	-
40	042120	FLV040AQIS+V	38	9	35	6,5	10	52	36	72	96	11	5	145	20	-
50	042121	FLV050AQIS+V	46,5	9	40	9	12	65	45	90	115	15	5,5	155	25	-
63	042122	FLV063AQIS+V	56,5	9	45	9	12	75	50	100	130	15	5,5	170	25	-
80	042123	FLV080AQIS+V	72	12	45	11	16	95	63	126	165	18	7	190	30	-
100	042124	FLV100AQIS+V	89	14	55	11	16	115	75	150	187	18	7	205	35	-
125	042125	FLV125AQIS+V	110	16	60	13	20	140	90	180	224	19	9,5	245	45	-
160	042126	FLV160AQIS+V	140	18	65	17	20	180	115	230	280	25	10,5	280	60	-
200	042127	FLV200AQIS+V	175	22	75	17	25	220	135	270	300	25	12,5	300	70	-
250	042128	FLV250AQIS+V	220	26	90	21	25	270	165	330	390	31	14,5	330	80	-
320	040683	FLV320AQIS+V	270	33	110	25	30	340	200	400	475	37	15	370	90	-

Main features

32 ÷ 320 ISO PB..AQIS+V

Bores Ø MS1 Type



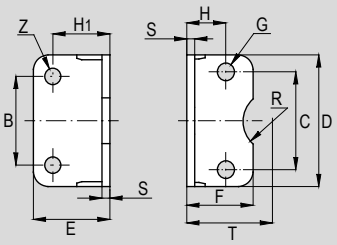

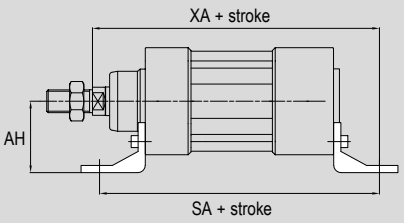

Technical data

Type	Description	Material	Treatment
PB..AQIS+V	Mounting for cylinders in steel. Low foot. For front or rear mounting. Supplied with screws. Supplied individually.	Fe 37	White zinc plating

Dimensions

For cylinder Ø mm	Code	Item	C	B	D	E	F	G	H	H_1	S	T	R	Z	AH	XA	SA	Weight (g)
32	042129	PB032AQIS+V	32,5	32	45	35	30	7	15,75	24	4	32	15	7	32	144	142	-
40	042130	PB040AQIS+V	38	36	52	36	30	7	17	28	4	36	17,5	10	36	163	161	-
50	042131	PB050AQIS+V	46,5	45	65	47	36	9	21,75	32	5	45	20	10	45	175	170	-
63	042132	PB063AQIS+V	56,5	50	75	45	35	9	21,75	32	5	50	22,5	10	50	190	185	-
80	042133	PB080AQIS+V	72	63	95	55	47	11	27	41	6	63	22,5	12	63	215	210	-
100	042134	PB100AQIS+V	89	75	115	57	53	11	26,5	41	6	71	27,5	14,5	71	230	220	-
125	042135	PB125AQIS+V	110	90	140	65	55	12,5	35	45	8	90	30	16	-	270	250	-
160	042136	PB160AQIS+V	140	115	180	80	75	16,5	45	60	8	115	32,5	18	-	320	300	-
200	042137	PB200AQIS+V	175	135	220	100	90	16,5	47,5	70	9	135	37,5	22	-	345	320	-
250	042138	PB250AQIS+V	220	165	270	110	110	21	55	75	20	165	45	28	-	380	350	-
320	042139	PB320AQIS+V	270	200	350	125	100	24,5	50	85	23	185	50	35	-	425	390	-

Mounting accessories for cylinders

Mountings in steel for cylinders ISO 15552

Main features

32 ÷ 320 | ISO | SEC..AQIS+SG

Bores Ø | AA4 | Type



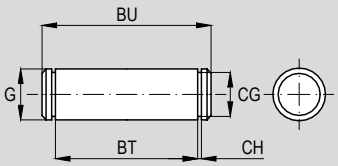

Technical data

Type	Description	Material
SEC..AQIS	Mounting for cylinders in steel. Pin. For rear female clevis ISO MP2. Supplied with two seeger.	Steel AVP

Dimensions

For cylinder Ø mm	Code	Item	G	BT	CG	CH	BU	Weight (g)
32	040261	SEC032AQIS+SG	10	46	9,6	1,1	53	32
40	040262	SEC040AQIS+SG	12	53	11,5	1,1	60	52
50	040263	SEC050AQIS+SG	12	61	11,5	1,1	68	60
63	040264	SEC063AQIS+SG	16	71	15,2	1,1	78	122
80	040265	SEC080AQIS+SG	16	91	15,2	1,1	98	152
100	040266	SEC100AQIS+SG	20	111	19	1,3	118	290
125	040267	SEC125AQIS+SG	25	132	23,9	1,3	139	530
160	040268	SEC160AQIS+SG	30	171,5	28,6	1,6	178	978
200	040269	SEC200AQIS+SG	30	171,5	28,6	1,6	178	978
250	040270	SEC250AQIS+SG	40	202	37,5	1,85	211	2100
320	040460	SEC320AQIS+SG	45	222	42,5	1,85	236	2950

Main features

32 ÷ 250 | ISO | SEC..ARAQIS+SG

Bores Ø | AA6 | Type



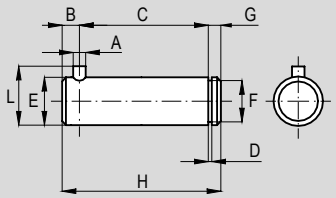

Technical data

Type	Description	Material
SEC..ARAQIS	Mounting for cylinders in steel. Anti-rotating pin. For narrow rear female clevis ISO AB6 (for bearing DIN 648K). Supplied with one seeger.	Steel AVP

Dimensions

For cylinder Ø mm	Code	Item	A	C	D	E	F	G	H	L	B		Weight (g)
32	040571	SEC032ARAQIS+SG	3	32,5	1,1	10	9,6	4	41	14	4,5		26
40	040572	SEC040ARAQIS+SG	4	38	1,1	12	11,5	4	48	16	6		42
50	040573	SEC050ARAQIS+SG	4	43	1,1	16	15,2	5	54	20	6	0	84
63	040574	SEC063ARAQIS+SG	4	49	101	16	15,2	5	60	20	6	-1	94
80	040575	SEC080ARAQIS+SG	4	63	1,3	20	19	6	75	24	6		184
100	040576	SEC100ARAQIS+SG	4	73	1,3	20	19	6	85	24	6		208
125	040577	SEC125ARAQIS+SG	6	94	1,6	30	28,6	7	110	36	9		606
160	040578	SEC160ARAQIS+SG	6	119	1,6	35	33	7	135	41	9	0	972
200	040579	SEC200ARAQIS+SG	6	119	1,6	35	33	7	135	41	9	-2	972
250	040600	SEC250ARAQIS+SG	8	121	1,85	40	37,5	7	140	48	12		1365

Mounting accessories for cylinders

Mountings in steel for cylinders ISO 15552

Main features

32 ÷ 200 ISO CT..AQIS+GR

Bores Ø MT4 Type



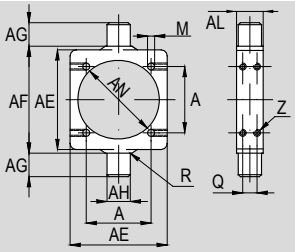

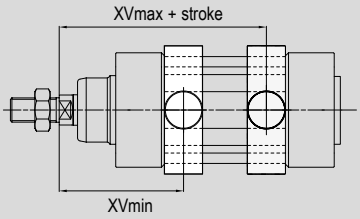

Technical data

Type	Description	Material	Treatment
CT..AQIS+GR	Mounting for cylinders in steel. Adjustable center trunnion (tie-rods). Supplied with grains. Compatible with cylinders type AMT and BMT. For trunnion mounted on the cylinder, please order togheter with the cylinder. Support type ST..AQIS to be ordered separately, see page 1.98.8	Steel A105	White zinc plating

Dimensions

For cylinder Ø mm	Code	Item	A	AE	AL	AH e9	AG h14	AF h14	AN	R	M	Q	Z	XVmin	XVmax	Weight (g)
32	040581	CT032AQIS+GR	32,5	46	15	12	12	50	37	1	6,25	7	M5	60	86	110
40	040582	CT040AQIS+GR	38	59	20	16	16	63	46	1,5	6,25	8	M5	69	96	290
50	040583	CT050AQIS+GR	46,5	69	20	16	16	75	56	1,6	8,25	8	M6	78	102	330
63	040584	CT063AQIS+GR	56,5	84	25	20	20	90	69	1,6	8,25	12	M6	82	113	650
80	040585	CT080AQIS+GR	72	102	25	20	20	110	87	1,6	10,25	12	M8	97	123	830
100	040586	CT100AQIS+GR	89	125	30	25	25	132	107	2	10,25	15	M8	107	133	1560
125	040587	CT125AQIS+GR	110	155	32	25	25	160	133	2	12,25	15	M10	126,5	163,5	2450
160	040588	CT160AQIS+GR	140	190	40	32	32	200	170	2,5	16,25	18	M12	150	190	4150
200	040589	CT200AQIS+GR	175	240	40	32	32	250	211	2,5	16,25	18	M12	165	205	7300

Main features

32 ÷ 125 ISO CTS..AQIS+GR

Bores Ø MT4 Type



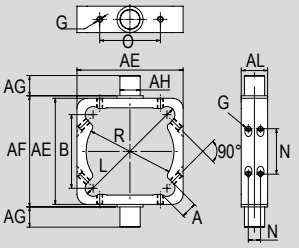

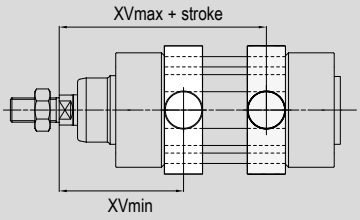

Technical data

Type	Description	Material	Treatment
CTS..AQIS+GR	Mounting for cylinders in steel. Center trunnion (profile barrel). Supplied with grains. Compatible with cylinders type AMA and BMA. For trunnion mounted on the cylinder, please order togheter with the cylinder. Support type ST..AQIS to be ordered separately, see page 1.98.8	Steel A105	White zinc plating

Dimensions

For cylinder Ø mm	Code	Item	B	AE	AL	AH e9	AG h14	AF h14	R	L	G	A	M	N	O	XVmin	XVmax	Weight (g)
32	040601	CTS032AQIS+GR	33	48.5	18	12	12	50	37	57	M5	11	15.5	7	-	60	86	104
40	040602	CTS040AQIS+GR	38	59	20	16	16	63	46	64	M6	11	20	8	-	69	96	234
50	040603	CTS050AQIS+GR	48	71	20	16	16	75	56	82	M6	14	22.5	8	-	78	102	300
63	040604	CTS063AQIS+GR	58	84	26	20	20	90	69	96	M6	14	30	12	-	82	113	577
80	040605	CTS080AQIS+GR	73	105	26	20	20	110	87	119	M6	16	45	12	58	97	123	858
100	040606	CTS100AQIS+GR	91	129	32	25	25	132	107	144.5	M8	17	60	15	74	107	133	1565
125	040607	CTS125AQIS+GR	116	154	33	25	25	160	133	181	M8	18	85.5	15	104	126,5	163,5	1932

Mounting accessories for cylinders

Mountings in steel for cylinders ISO 15552

Main features

32 ÷ 320 ISO **CTN..AQIS**

Bores Ø MT4 Type



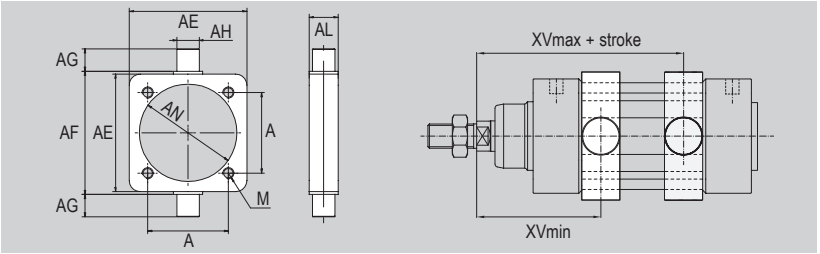

Technical data

Type	Description	Material	Treatment
CTN..AQIS	Mounting for cylinders in steel. Non adjustable center trunnion (threaded). Compatible with cylinders type AMT and BMT. For trunnion mounted on the cylinder, please order togheter with the cylinder, indicating the XV dimension (cannot be modified). Support type ST..AQIS to be ordered separately, see page 1.98.8	Steel A105	White zinc plating

Dimensions

For cylinder Ø mm	Code	Item	A	AE	AL	AH e9	AG h14	AF h14	AN	M	XVmin	XVmax	Weight (g)
32	040052	CTN032AQIS	32.5	46	15	12	12	50	37	M6	60	86	128
40	040053	CTN040AQIS	38	59	20	16	16	63	46	M6	69	96	308
50	048590	CTN050AQIS	46.5	69	20	16	16	75	56	M8	78	102	370
63	040564	CTN063AQIS	56.5	84	25	20	20	90	69	M8	82	113	690
80	040096	CTN080AQIS	72	102	25	20	20	110	87	M10	97	123	894
100	040097	CTN100AQIS	89	125	30	25	25	132	107	M10	107	133	1584
125	040098	CTN125AQIS	110	155	32	25	25	160	133,5	M12	126,5	163,5	2600
160	040099	CTN160AQIS	140	190	40	32	32	200	171	M16	150	190	4300
200	040100	CTN200AQIS	175	240	40	32	32	250	211	M16	165	205	7450
250	040110	CTN250AQIS	220	296	50	40	40	320	268	M20	190	220	13000
320	040590	CTN320AQIS	270	370	60	50	50	400	343	M24	215	245	22500

Main features

32 ÷ 200 ISO **CTA..AQIS+V**

Bores Ø MT5/MT6 Type



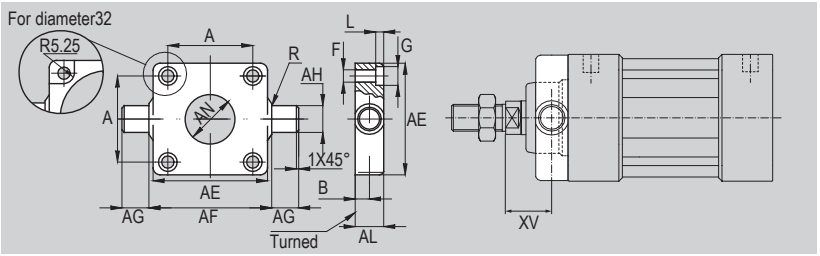

Technical data

Type	Description	Material	Treatment
CTA..AQIS+V	Mounting for cylinders in steel. Center trunnion for heads. For front or rear mounting. Supplied with screws. Compatible with cylinders type AMA, AMT, BMA and BMT. Support type ST..AQIS to be ordered separately, see page 1.98.8	Steel A105	White zinc plating

Dimensions

For cylinder Ø mm	Code	Item	AE	AL	AH e9	AG h14	AF h14	AN	A	B	F	G	L	R	XV	Weight (g)
32	040591	CTA032AQIS+V	46	14	12	12	50	30	32,5	6,5	6,5	-	6	1	19	137
40	040592	CTA040AQIS+V	59	19	16	16	63	35	38	9	6,5	10,5	6	1,6	20,5	385
50	040593	CTA050AQIS+V	69	19	16	16	75	40	46,5	9	8,5	13,5	8	1,6	27,5	513
63	040594	CTA063AQIS+V	84	24	20	20	90	45	56,5	11,5	8,5	13,5	8	1,6	25	1041
80	040595	CTA080AQIS+V	102	24	20	20	110	45	72	11,5	10,5	16,5	10	1,6	34	1567
100	040596	CTA100AQIS+V	125	29	25	25	132	55	89	14	10,5	16,5	10	2	36,5	2400
125	040598	CTA125AQIS+V	150	30	25	25	160	60	110	15	13,5	20	12	2	49	3000
160	040631	CTA160AQIS+V	190	40	32	32	200	65	140	20	17	25	16	2,5	60	4150
200	040632	CTA200AQIS+V	240	40	32	32	250	75	175	20	17	25	16	2,5	75	7350

Mounting accessories for cylinders

Mountings in steel for cylinders ISO 15552

Main features

32 ÷ 320 — Bores Ø

ISO — AT4

ST..AQIS — Type



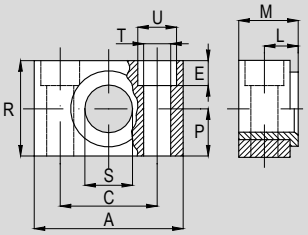

Technical data

Type	Description	Material	Treatment
ST..AQIS	Mounting for cylinders in steel. Support for center trunnion. Supplied individually.	Fe 37 - Bronze	Black cataphoresis

Dimensions

For cylinder Ø mm	Code	Item	A	M	R	P	C	S	L	U	T	E	Weight (g)
32	040681	ST032AQIS	46	18	30	15	32	12	10,5	11	6,6	7	100
40	040682	ST040/050AQIS	55	21	36	18	36	16	12	15	9	9	150
50													
63	040684	ST063/080AQIS	65	23	40	20	42	20	13	18	11	11	234
80													
100	040686	ST100/125AQIS	75	28,5	50	25	50	25	16	20	14	13	435
125													
160	040688	ST160/200AQIS	92	40	60	30	60	32	22,5	26	18	17	850
200													
250	040689	ST250AQIS	140	56	70	35	90	40	31	33	22	20	2750
320	040690	ST320AQIS	150	60	80	40	100	50	32,5	39	26	25,5	3520

Mounting accessories for cylinders
Mountings in aluminium for cylinders CNOMO

Main features

32 ÷ 200 CNOMO CF..ALCN

Bores Ø Type



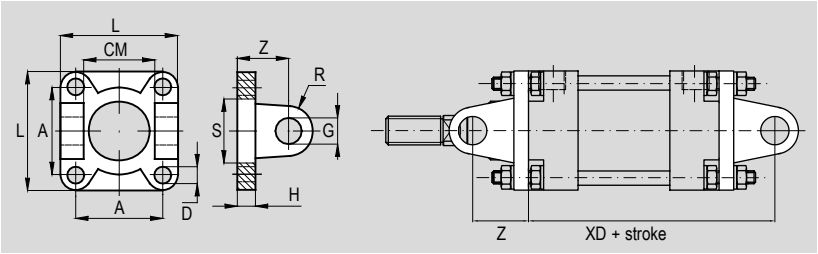

Technical data

Type	Description	Material	Treatment
CF..ALCN	Mounting for cylinders in aluminium. Rear clevis. For front or rear mounting. Pin type SEC..AQCN to be ordered separately, see page 1.99.51. Nuts and growers to be ordered separately, see page 1.101.20.	Die-cast aluminium	Sifting

Dimensions

For cylinder Ø mm	Code	Item	A	L	D	H	CM	S	R	Z	G	XD	Weight (g)
32	040401	CF032ALCN	33	45	7	8	26	25	8	18	8	98	38
40	040402	CF040ALCN	40	52	7	8	33	32	12	24	12	134	58
50	040403	CF050ALCN	49	65	9	10	33	32	12	26	12	138	118
63	040404	CF063ALCN	59	75	9	10	47	45	16	30	16	155	146
80	040405	CF080ALCN	75	95	11	12	47	45	16	32	16	157	324
100	040406	CF100ALCN	90	115	11	12	57	55	20	37	20	182	492
125	040407	CF125ALCN	110	140	14	16	57	55	21	41	20	186	978
160	040408	CF160ALCN	140	180	18	20	72	65	25	55	25	235	1872
200	040409	CF200ALCN	175	220	18	20	72	65	25	55	25	235	2800

Main features

32 ÷ 200 CNOMO AN..ALCN

Bores Ø Type



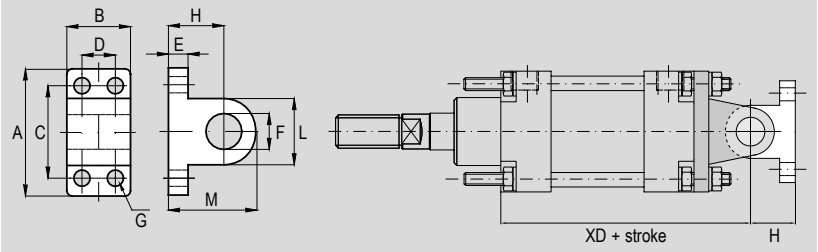

Technical data

Type	Description	Material	Treatment
AN..ALCN	Mounting for cylinders in aluminium. Rear standard hinge. For mounting with rear female clevis.	Die-cast aluminium	Sifting

Dimensions

For cylinder Ø mm	Code	Item	A	B	C	D	E	F	G	H	L	M	XD	Weight (g)
32	040281	AN032ALCN	40	25	28	-	8	8	7	18	16	26	98	26
40	040282	AN040/050ALCN	52	32	38	16	10	12	9	26	24	38	134	56
50													138	
63	040284	AN063/080ALCN	75	46	54	25	12	16	11	34	36	52	155	176
80													157	
100	040286	AN100/125ALCN	115	56	90	32	16	20	14	41	40	61	182	376
125													186	
160	040288	AN160/200ALCN	180	71	150	43	20	25	18	55	50	80	235	924
200														

Mounting accessories for cylinders

Mountings in aluminium for cylinders CNOMO

Main features

32 ÷ 200 CNOMO AS..ALCN

Bores Ø Type



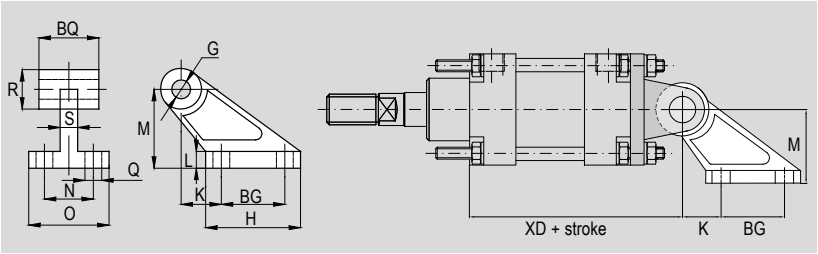

Technical data

Type	Description	Material	Treatment
AS..ALCN	Mounting for cylinders in aluminium. Rear 90° hinge. For mounting with rear female clevis. Nuts and growers to be ordered separately, see page 1.101.20.	Die-cast aluminium	Sifting

Dimensions

For cylinder Ø mm	Code	Item	Q	BG	H	K	L	M	N	O	S	R	BQ	G	XD	Weight (g)
32	040321	AS032ALCN	7	20	37	18	8	32	25	41	9	19,5	25	8	98	58
40	040322	AS040/050ALCN	9	32	54	25	10	45	32	52	14	26	32	12	134	144
50															138	
63	040324	AS063/080ALCN	11	50	75	32	13	63	40	63	14	32	46	16	155	300
80															157	
100	040326	AS100/125ALCN	14	70	103	40	17	90	50	80	22	42	56	20	182	694
125															186	
160	040328	AS160/200ALCN	18	110	154	50	20	140	63	111	26	54	70	25	235	1922
200																

Main features

25 ÷ 200 CNOMO P..ALCN

Bores Ø Type



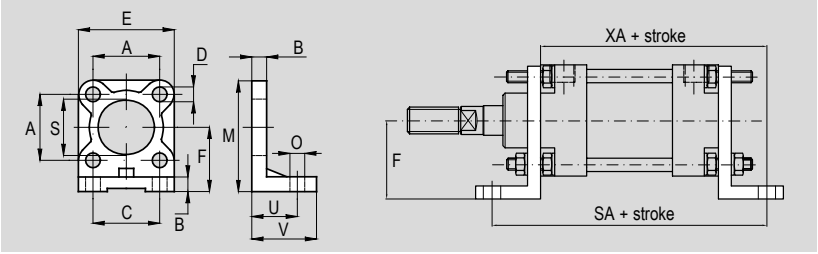

Technical data

Type	Description	Material	Treatment
P..ALCN	Mounting for cylinders in aluminium. High foot. For front or rear mounting. Supplied individually. Nuts and growers to be ordered separately, see page 1.101.20.	Die-cast aluminium	Sifting

Dimensions

For cylinder Ø mm	Code	Item	A	B	C	D	E	F	M	O	S	U	V	XA	SA	Weight (g)
25	040198	P025ALCN	28	8	24	7	40	30	50	9	25	27	35	107	134	40
32	040101	P032ALCN	33	8	28	7	45	32	54	9	25	27	35	107	134	54
40	040102	P040ALCN	40	8	36	7	52	36	62	9	32	27	35	137	164	70
50	040103	P050ALCN	49	10	45	9	65	45	77	11	32	35	45	145	180	150
63	040104	P063ALCN	59	10	55	9	75	50	87	11	45	35	45	160	195	170
80	040105	P080ALCN	75	12	70	11	95	63	110	14	45	43	55	168	211	354
100	040106	P100ALCN	90	12	90	11	115	73	130	14	55	43	55	188	231	470
125	040107	P125ALCN	110	16	110	14	140	91	161	18	55	52	68	197	249	918
160	040108	P160ALCN	140	20	130	18	180	115	205	22	65	62	82	242	304	2300
200	040109	P200ALCN	175	20	170	18	220	135	245	22	65	62	92	242	304	3450

Mounting accessories for cylinders

Mountings in steel for cylinders CNOMO

Main features

32 ÷ 200 CNOMO FL..AQCN

Bores Ø Type



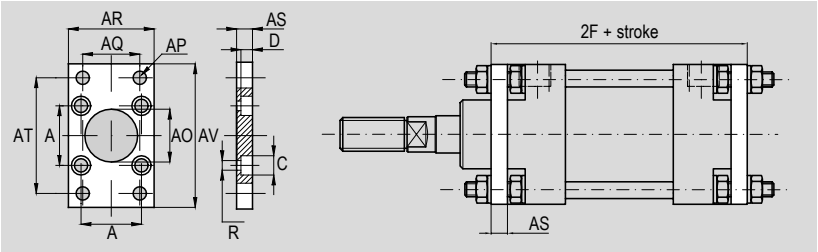

Technical data

Type	Description	Material	Treatment
FL..AQCN	Mounting for cylinders in steel. Counterbored flange. For front or rear mounting. Nuts and growers to be ordered separately, see page 1.101.20.	Fe 37	White zinc plating

Dimensions

For cylinder Ø mm	Code	Item	A	AP	AO	R	AS	AR	AQ	AT	AV	C	D	2F	Weight (g)
32	040621	FL032AQCN	33	9	25	6,5	8	45	33	69	80	10,5	6	96	158
40	040622	FL040AQCN	40	9	32	6,5	8	52	40	78	90	10,5	6	126	206
50	040623	FL050AQCN	49	11	32	9	10	65	49	94	110	13,5	8	130	424
63	040624	FL063AQCN	59	11	45	9	10	75	59	104	120	13,5	8	145	504
80	040625	FL080AQCN	75	14	45	10,5	12	95	75	130	150	16,5	10	149	1046
100	040626	FL100AQCN	90	14	55	10,5	12	115	90	150	170	16,5	10	169	1480
125	040627	FL125AQCN	110	18	55	13,5	16	140	110	180	205	19	12,5	175	3000
160	040628	FL160AQCN	140	22	65	16,5	20	180	140	228	260	24,5	16,5	220	6300
200	040629	FL200AQCN	175	22	65	16,5	20	220	175	268	300	24,5	16,5	220	9300

Main features

32 ÷ 200 CNOMO FLF..AQCN

Bores Ø Type



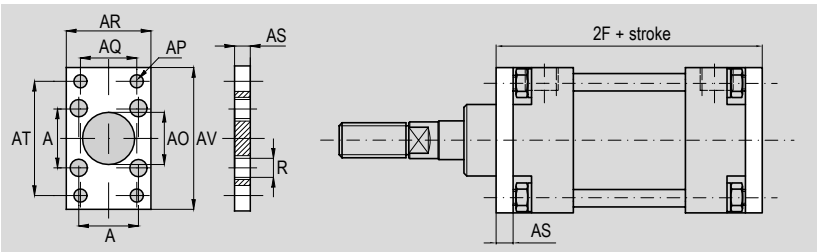

Technical data

Type	Description	Material	Treatment
FLF..AQCN	Mounting for cylinders in steel. Threaded flange. For front or rear mounting. Nuts and growers to be ordered separately, see page 1.101.20. With mounting this accessory, quote T of tie-rods (see page 1.14.21 or 1.14.41) will be 1 mm lower of the flange thickness (AS dimension), while on the opposite side, quote T is equal 0. The accessory necessarily has to be ordered with the cylinder.	Fe 37	White zinc plating

Dimensions

For cylinder Ø mm	Code	Item	A	AP	AO	R	AS	AR	AQ	AT	AV	2F	Weight (g)
32	040948	FLF032AQCN	33	9	25	M6	8	45	33	69	80	96	170
40	040949	FLF040AQCN	40	9	32	M6	8	52	40	78	90	126	220
50	040950	FLF050AQCN	49	11	32	M8	10	65	49	94	110	130	450
63	040951	FLF063AQCN	59	11	45	M8	10	75	59	104	120	145	532
80	040952	FLF080AQCN	75	14	45	M10	12	95	75	130	150	149	1100
100	040953	FLF100AQCN	90	14	55	M10	12	115	90	150	170	169	1536
125	040954	FLF125AQCN	110	18	55	M12	16	140	110	180	205	175	3100
160	040955	FLF160AQCN	140	22	65	M16	20	180	140	228	260	220	6500
200	040956	FLF200AQCN	175	22	65	M16	20	220	175	268	300	220	9500

Mounting accessories for cylinders
Mountings in steel for cylinders CNOMO

Main features

32 ÷ 200 CNOMO PB..AQCN

Bores Ø | Type



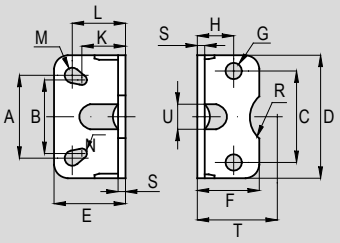

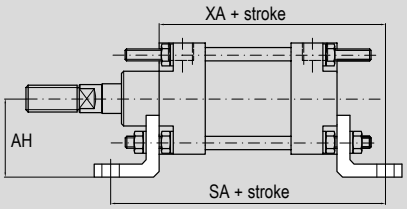

Technical data

Type	Description	Material	Treatment
PB..AQCN	Mounting for cylinders in steel. Low foot. For front or rear mounting. Supplied individually. Nuts and growers to be ordered separately, see page 1.101.20.	Fe 37	White zinc plating

Dimensions

For cylinder Ø mm	Code	Item	A	B	C	D	E	F	G	H	K	L	M	N	R	S	T	U	AH_{J13}	XA	SA	Weight (g)
32	040161	PB032AQCN	28	32	33	45	35	30	7	15,5	22	27	4,5	3,5	12,5	4	32	11	29,5	107	134	66
40	040162	PB040AQCN	36	36	40	52	36	30	7	16	26	27	4,5	4,5	16	4	36	15	32,5	137	164	78
50	040163	PB050AQCN	45	45	49	65	45	36	9	20,5	30	35	5,5	4,5	16	5	45	16	40,5	145	180	168
63	040164	PB063AQCN	55	50	59	75	45	35	9	20,5	30	35	5,5	4,5	22,5	5	50	18	45	160	195	190
80	040165	PB080AQCN	70	63	75	95	55	45	11	25,5	37	43	7	5,5	22,5	6	63	17	63	168	211	382
100	040166	PB100AQCN	90	75	90	115	56	44	11	27	37,5	43	7	6,5	27,5	6	73	24	72	188	231	452
125	040167	PB125AQCN	100	-	110	140	70	70	14	36	-	52	9	-	27,5	8	91	-	91	197	249	1150
160	040168	PB160AQCN	130	-	140	180	75	100	18	45	-	62	11	-	32,5	9	115	-	115	242	304	2000
200	040169	PB200AQCN	170	-	175	220	100	100	18	47	-	62	11	-	32,5	12	135	-	134,5	242	304	3800

Main features

32 ÷ 200 CNOMO SEC..AQCN

Bores Ø | Type



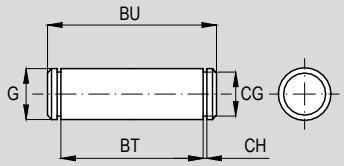

Technical data

Type	Description	Material	Treatment
SEC..AQCN	Mounting for cylinders in steel. Pin for female rear clevis. Supplied with two seeger.	AVP steel	White zinc plating

Dimensions

For cylinder Ø mm	Code	Item	G	BT	CG	CH	BU	Weight (g)
32	040221	SEC032AQCN	8	46	7,6	1,1	53	21
40	040222	SEC040AQCN	12	53	11,5	1,1	60	52
50	040223	SEC050AQCN	12	66	11,5	1,1	73	64
63	040224	SEC063AQCN	16	76	15,2	1,1	83	130
80	040225	SEC080AQCN	16	96	15,2	1,1	103	160
100	040226	SEC100AQCN	20	117	19	1,3	124	304
125	040227	SEC125AQCN	20	142	19	1,3	149	364
160	040228	SEC160AQCN	25	182	23,9	1,3	189	720
200	040229	SEC200AQCN	25	222	23,9	1,3	229	872

Mounting accessories for cylinders

Mountings in steel for cylinders CNOMO

Main features

32 ÷ 200 CNOMO CT..AQCN

Bores Ø Type



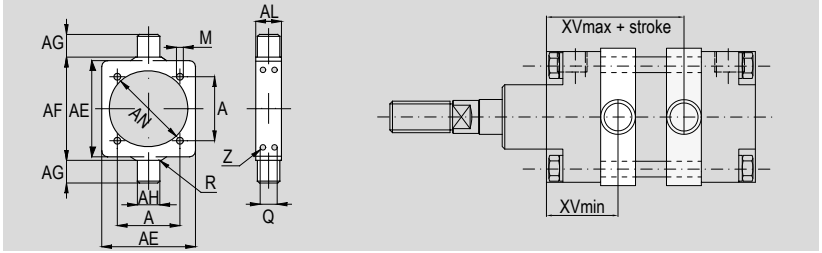

Technical data

Type	Description	Material	Treatment
CT..AQCN	Mounting for cylinders in steel. Adjustable center trunnion (tie-rods). Supplied with grains. With mounting this accessory, quote T of tie-rods (see page 1.14.21 o 1.14.41) is equal 0 in every bore. For trunnion mounted on the cylinder, please order togheter with the cylinder. Support type ST..AQIS to be ordered separately, see page 1.99.53	A105 steel	White zinc plating

Dimensions

For cylinder Ø mm	Code	Item	A	AE	AL	AH	AG	AF	AN	R	M	Q	Z	XV min.	XV max.	Weight (g)
32	040559	CT032AQCN	33	46	15	12	12	50	37	1	6,25	7	M5	32,5	47,5	110
40	040558	CT040AQCN	40	59	20	16	16	63	46	1,5	6,25	8	M5	41	69	290
50	040538	CT050AQCN	49	69	20	16	16	73	56	1,6	8,25	8	M6	45	65	330
63	040540	CT063AQCN	59	84	25	20	20	90	69	1,6	8,25	12	M6	52,5	72,5	650
80	040545R	CT080AQCN	75	102	25	20	20	108	87	1,6	10,25	12	M8	52,5	72,5	830
100	040546R	CT100AQCN	90	125	30	25	25	131	107	2	10,25	15	M8	57	88	1560
125	040580	CT125AQCN	110	155	32	25	25	160	133,5	2	12,25	15	M10	58	87	2450
160	040630	CT160AQCN	140	190	40	32	32	200	171	2,5	16,25	18	M12	67	113	4150
200	040597	CT200AQCN	175	240	40	32	32	250	211	2,5	16,25	18	M12	68	112	7300

Main features

32 ÷ 200 CNOMO CTN..AQCN

Bores Ø Type



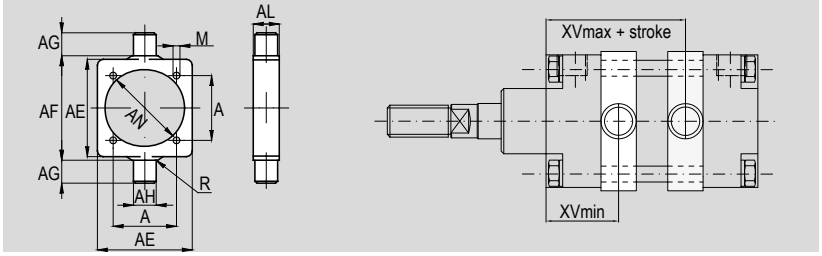

Technical data

Type	Description	Material	Treatment
CTN..AQCN	Mounting for cylinders in steel. Non adjustable center trunnion (threaded). With mounting this accessory, quote T of tie-rods (see page 1.14.21 o 1.14.41) is equal 0 in every bore. For trunnion mounted on the cylinder, please order togheter with the cylinder, indicating the XV dimension (cannot be modified). Support type ST..AQIS to be ordered separately, see page 1.99.53	A105 steel	White zinc plating

Dimensions

For cylinder Ø mm	Code	Item	A	AE	AL	AH	AG	AF	AN	R	M	XV min.	XV max.	Weight (g)
32	040541	CTN032AQCN	33	46	15	12	12	50	37	1	M6	32,5	47,5	130
40	040542	CTN040AQCN	40	59	20	16	16	63	46	1,5	M6	41	69	306
50	040543	CTN050AQCN	49	69	20	16	16	73	56	1,6	M8	45	65	370
63	040544	CTN063AQCN	59	84	25	20	20	90	69	1,6	M8	52,5	72,5	702
80	040545	CTN080AQCN	75	102	25	20	20	108	87	1,6	M10	52,5	72,5	894
100	040546	CTN100AQCN	90	125	30	25	25	131	107	2	M10	57	88	1590
125	040547	CTN125AQCN	110	155	32	25	25	160	133,5	2	M12	58	87	2600
160	040548	CTN160AQCN	140	190	40	32	32	200	171	2,5	M16	67	113	4300
200	040549	CTN200AQCN	175	240	40	32	32	250	211	2,5	M16	68	112	7450

Mounting accessories for cylinders
Mountings in steel for cylinders CNOMO

Main features

32 ÷ 200 — Bores Ø

ISO AT4

ST..AQIS — Type



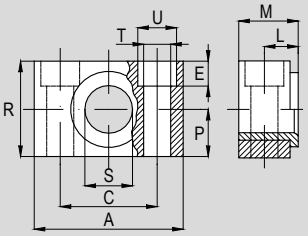

Technical data

Type	Description	Material	Treatment
ST..AQIS	Mounting for cylinders in steel. Support for center trunnion. Supplied individually.	Fe 37 - Bronze	Black cataphoresis

Dimensions

For cylinder Ø mm	Code	Item	A	M	R	P	C	S	L	U	T	E	Weight (g)
32	040681	ST032AQIS	46	18	30	15	32	12	10,5	11	6,6	7	100
40	040682	ST040/050AQIS	55	21	36	18	36	16	12	15	9	9	150
50													
63	040684	ST063/080AQIS	65	23	40	20	42	20	13	18	11	11	234
80													
100	040686	ST100/125AQIS	75	28,5	50	25	50	25	16	20	14	13	435
125													
160	040688	ST160/200AQIS	92	40	60	30	60	32	22,5	26	18	17	850
200													

Mounting accessories for cylinders

Mountings in aluminium for compact cylinders ISO 21287

Main features

32 ÷ 125 | ISO | CF..ALIS+VP

Bores Ø | MP2 | Type



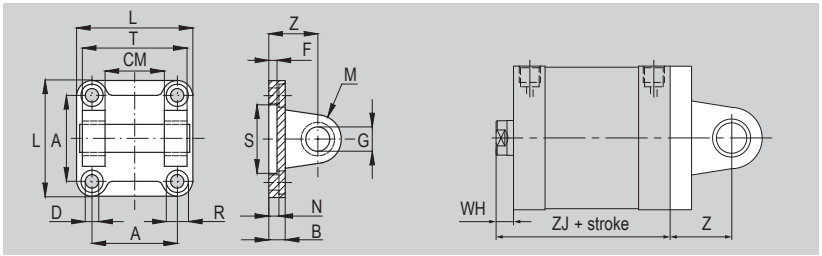

Technical data

Type	Description	Material	Treatment
CF..ALIS+VP	Mounting for cylinders in aluminium. Rear clevis. Supplied with screws and pin.	Die-cast aluminium	Sifting

Dimensions

For cylinder Ø mm	Code	Item	A	L	D	R	N	B	S	F	Z	G	M	CM	T	ZJ	WH	Weight (g)
32	042050	CF032ALIS+VP	32,5	45	6,6	11	5,5	9	30	5	22	10	10	26	45	51	7	-
40	042051	CF040ALIS+VP	38	52	6,6	11	5,5	9	35	5	25	12	12	28	52	52	7	-
50	042052	CF050ALIS+VP	46,5	65	9	15	6,5	11	40	5	27	12	12	32	60	53	8	-
63	042053	CF063ALIS+VP	56,5	75	9	15	6,5	11	45	5	32	16	16	40	70	57	8	-
80	042054	CF080ALIS+VP	72	95	11	18	10	14	45	5	36	16	16	50	90	64	10	-
100	042055	CF100ALIS+VP	89	115	11	18	10	14	55	5	41	20	20	60	110	77	10	-
125	042056	CF125ALIS+VP	110	140	14	20	10	20	60	7	50	25	25	70	130	92	11	-

Main features

32 ÷ 125 | ISO | CF..ALIS+V

Bores Ø | MP2 | Type



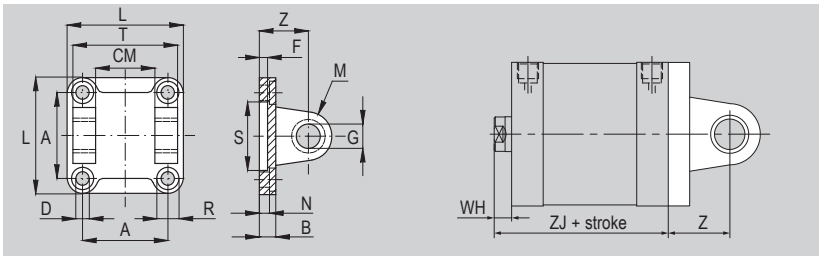

Technical data

Type	Description	Material	Treatment
CF..ALIS+V	Mounting for cylinders in aluminium. Rear clevis. Supplied with screws.	Die-cast aluminium	Sifting

Dimensions

For cylinder Ø mm	Code	Item	A	L	D	R	N	B	S	F	Z	G	M	CM	T	ZJ	WH	Weight (g)
32	040441	CF032ALIS+V	32,5	45	6,6	11	5,5	9	30	5	22	10	10	26	45	51	7	-
40	040442	CF040ALIS+V	38	52	6,6	11	5,5	9	35	5	25	12	12	28	52	52	7	-
50	040443	CF050ALIS+V	46,5	65	9	15	6,5	11	40	5	27	12	12	32	60	53	8	-
63	040444	CF063ALIS+V	56,5	75	9	15	6,5	11	45	5	32	16	16	40	70	57	8	-
80	040445	CF080ALIS+V	72	95	11	17	10	14	45	5	36	16	16	50	90	64	10	-
100	040446	CF100ALIS+V	89	115	11	18	10	14	55	5	41	20	20	60	110	77	10	-
125	040447	CF125ALIS+V	110	140	14	20	10	20	60	7	50	25	25	70	130	92	11	-

Mounting accessories for cylinders

Mountings in aluminium for compact cylinders ISO 21287

Main features

32 ÷ 125 ISO CFS..ALIS+VP

Bores Ø AB6 Type



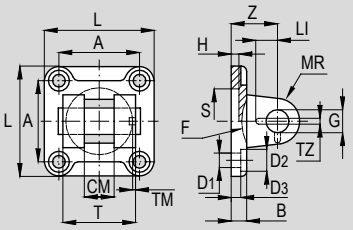

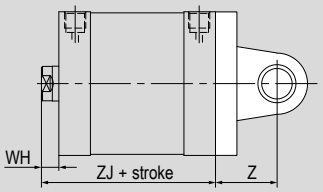

Technical data

Type	Description	Material	Treatment
CFS..ALIS+VP	Mounting for cylinders in aluminium. Narrow rear clevis. Supplied with screws and anti-rotating pin.	Die-cast aluminium	Sifting

Dimensions

For cylinder Ø mm	Code	Item	L	T	CM	A	Z	H	B	D_3	S	G	MR	D_1	D_2	TM	TZ	LI	F	ZJ	WH	Weight (g)
32	042110	CFS032ALIS+VP	45	34	14	32,5	22	5	9	5,5	30	10	10	6,6	11	3	3,3	11,5	17	51	7	-
40	042111	CFS040ALIS+VP	52	40	16	38	25	5	9	5,5	35	12	12	6,6	11	4	4,3	12	20	52	7	-
50	042112	CFS050ALIS+VP	65	45	21	46,5	27	5	11	6,5	40	16	14	9	15	4	4,3	14	22	53	8	-
63	042113	CFS063ALIS+VP	75	51	21	56,5	32	5	11	6,5	45	16	18	9	15	4	4,3	14	25	57	8	-
80	042114	CFS080ALIS+VP	95	65	25	72	36	5	14	10	45	20	20	11	18	4	4,3	16	30	64	10	-
100	042115	CFS100ALIS+VP	115	75	25	89	41	5	14	10	55	20	22	11	18	4	6,3	16	32	77	10	-
125	042116	CFS125ALIS+VP	140	97	37	110	50	7	20	10	60	30	25	14	20	6	6,3	24	42	92	11	-

Main features

32 ÷ 125 ISO CFS..ALIS+V

Bores Ø AB6 Type



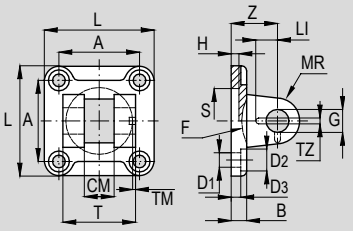

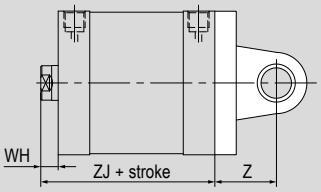

Technical data

Type	Description	Material	Treatment
CFS..ALIS+V	Mounting for cylinders in aluminium. Narrow rear clevis. Supplied with screws.	Die-cast aluminium	Sifting

Dimensions

For cylinder Ø mm	Code	Item	L	T	CM	A	Z	H	B	D_3	S	G	MR	D_1	D_2	TM	TZ	LI	F	ZJ	WH	Weight (g)
32	040451	CFS032ALIS+V	45	34	14	32,5	22	5	9	5,5	30	10	10	6,6	11	3	3,3	11,5	17	51	7	-
40	040452	CFS040ALIS+V	52	40	16	38	25	5	9	5,5	35	12	12	6,6	11	4	4,3	12	20	52	7	-
50	040453	CFS050ALIS+V	65	45	21	46,5	27	5	11	6,5	40	16	14	9	15	4	4,3	14	22	53	8	-
63	040454	CFS063ALIS+V	75	51	21	56,5	32	5	11	6,5	45	16	18	9	15	4	4,3	14	25	57	8	-
80	040455	CFS080ALIS+V	95	65	25	72	36	5	14	10	45	20	20	11	18	4	4,3	16	30	64	10	-
100	040456	CFS100ALIS+V	115	75	25	89	41	5	14	10	55	20	22	11	18	4	6,3	16	32	77	10	-
125	040457	CFS125ALIS+V	140	97	37	110	50	7	20	10	60	30	25	14	20	6	6,3	24	42	92	11	-

Mounting accessories for cylinders

Mountings in aluminium for compact cylinders ISO 21287

Main features

16 ÷ 25 — Bores Ø

UNI TOP — CM..ALUN — Type



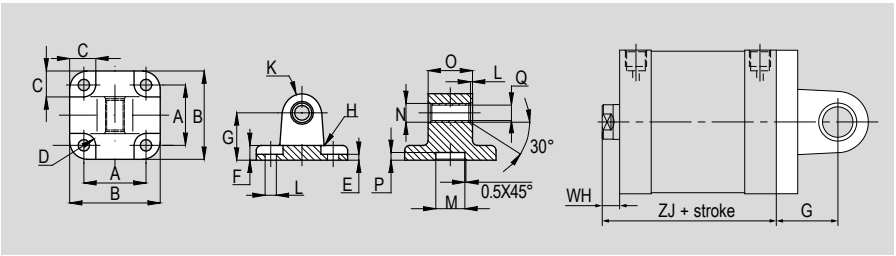

Technical data

Type	Description	Material	Treatment
CM..ALUN	Mounting for cylinders in aluminium. Rear eye. Mounting screws to be ordered separately, see page 1.101.30.	Die-cast aluminium	Sifting

Dimensions

For cylinder Ø mm	Code	Item	A	B	C	D	E	F	G	H	K	L	M	N	O	P	Q	V	ZJ	WH	Weight (g)
16	040701	CM012/016ALUN	18	27	10	4,5	2,6	6	16	2	6	4,5	10	8	12	3	6	10	39,5	4,5	17
20	040702	CM020ALUN	22	34	11	5	2,6	6	20	2	8	5,5	12	10	16	3	8	14	43	6	21
25	040703	CM025ALUN	26	38	11	5	2,6	6	20	2	8	5,5	12	10	16	3	8	14	45	6	27

Main features

32 ÷ 125 — Bores Ø

ISO — MP4

CM..ALIS+V — Type



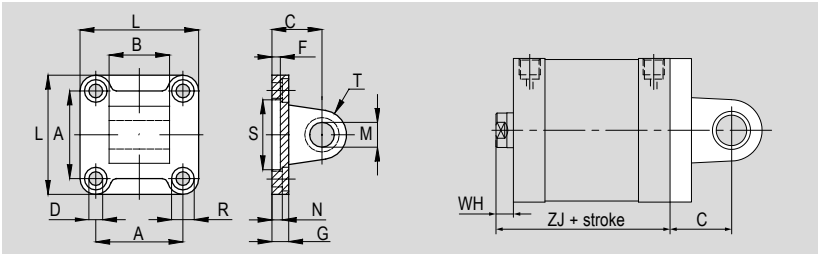

Technical data

Type	Description	Material	Treatment
CM..ALIS+V	Mounting for cylinders in aluminium. Rear eye. Supplied with screws.	Die-cast aluminium	Sifting

Dimensions

For cylinder Ø mm	Code	Item	A	L	D	R	N	G	S	F	C	M	T	B		ZJ	WH	Weight (g)
32	042061	CM032ALIS+V	32,5	45	6,6	11	5,5	9	30	5	22	10	10	26		51	7	-
40	042062	CM040ALIS+V	38	52	6,6	11	5,5	9	35	5	25	12	12	28		52	7	-
50	042063	CM050ALIS+V	46,5	65	9	15	6,5	11	40	5	27	12	12	32	-0,2	53	8	-
63	042064	CM063ALIS+V	56,5	75	9	15	6,5	11	45	5	32	16	16	40	-0,6	57	8	-
80	042065	CM080ALIS+V	72	95	11	18	10	14	45	5	36	16	16	50		64	10	-
100	042066	CM100ALIS+V	89	115	11	18	10	14	55	5	41	20	20	60		77	10	-
125	042067	CM125ALIS+V	110	140	14	20	10	20	60	7	50	25	25	70	-0,5 -1,2	92	11	-

Mounting accessories for cylinders

Mountings in aluminium for compact cylinders ISO 21287

Main features

32 ÷ 125 ISO CMS..ALIS+V

Bores Ø | MP6 | Type



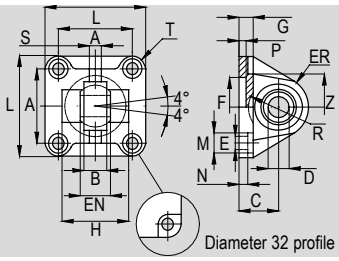

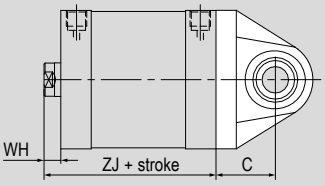

Technical data

Type	Description	Material	Treatment
CMS..ALIS+V	Mounting for cylinders in aluminium. Narrow rear eye with spherical bearing DIN 648K. Supplied with screws.	Die-cast aluminium	Sifting

Dimensions

For cylinder Ø mm	Code	Item	A	B	C	D	EN	ER	F	G	E	L	M	N	P	H	R	S	Z	T	ZJ	WH	Weight (g)
32	042101	CMS032ALIS+V	32,5	10,5	22	10	14	16	30	9	6,6	45	11	5,5	5	-	-	4	32,5	6,25	51	7	42
40	042102	CMS040ALIS+V	38	12	25	12	16	19	35	9	6,6	52	11	5,5	5	-	-	6	39	7	52	7	70
50	042103	CMS050ALIS+V	46,5	15	27	16	21	21	40	11	9	65	15	6,5	5	51	18	8	47	9,25	53	8	112
63	042104	CMS063ALIS+V	56,5	15	32	16	21	24	45	11	9	75	15	6,5	5	-	-	8	52	9,25	57	8	194
80	042105	CMS080ALIS+V	72	18	36	20	25	28,5	45	14	11	95	18	10	5	72	24	10	67	11,5	64	10	382
100	042106	CMS100ALIS+V	89	18	41	20	25	30	55	14	11	115	18	10	5	-	-	10	77	13	77	10	610
125	042107	CMS125ALIS+V	110	25	50	30	37	40	60	20	13,5	140	20	10	7	-	-	13	98	15	92	11	1100

Main features

32 ÷ 125 ISO ASV..ALIS+V

Bores Ø | AB7 | Type

cetop RP 107P



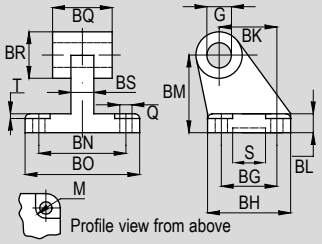

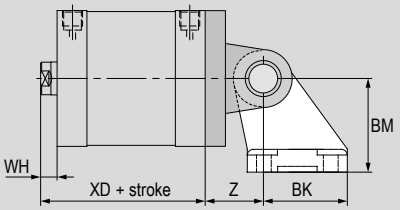

Technical data

Type	Description	Material	Treatment
ASV..ALIS+V	Mounting for cylinders in aluminium. Rear 90° hinge. For mounting with rear female clevis type CF. Supplied with screws.	Die-cast aluminium	Sifting

Dimensions

For cylinder Ø mm	Code	Item	Q	M	BG	BH	BK	BL	BM	BN	BO	BS	BR	G	T	S	BQ		Z	ZJ	WH	Weight (g)
32	042081	ASV032ALIS+V	6,6	11	18	31	21	8	32	38	51	10	20	10	1,6	10,5	26		22	51	7	-
40	042082	ASV040ALIS+V	6,6	11	22	35	24	10	36	41	54	15	22	12	1,6	10,5	28		25	52	7	-
50	042083	ASV050ALIS+V	9	15	30	45	33	12	45	50	65	16	26	12	1,6	10,5	32	-0,2	27	53	8	-
63	042084	ASV063ALIS+V	9	15	35	50	37	14	50	52	67	16	30	16	1,6	10,5	40	-0,6	32	57	8	-
80	042085	ASV080ALIS+V	11	18	40	60	47	14	63	66	86	20	30	16	2,5	10,5	50		36	64	10	-
100	042086	ASV100ALIS+V	11	18	50	70	55	17	71	76	96	20	38	20	2,5	10,5	60		41	77	10	-
125	042087	ASV125ALIS+V	14	20	60	90	70	20	90	94	124	30	45	25	3,2	10,5	70	-0,5 -1,2	50	92	11	-

Mounting accessories for cylinders

Mountings in aluminium for compact cylinders ISO 21287

Main features

16 ÷ 25 — Bores Ø

UNI TOP — FL..ALUN — Type



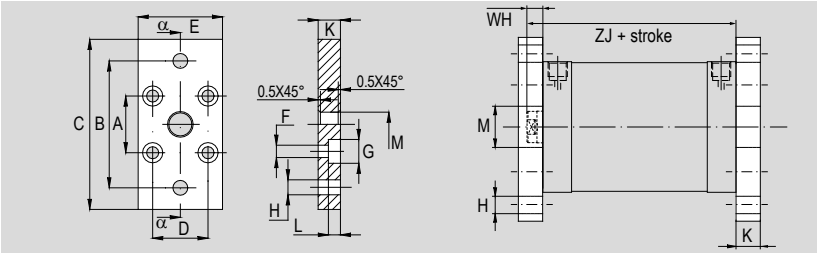

Technical data

Type	Description	Material	Treatment
FL..ALUN	Mounting for cylinders in aluminium. Flange. For front or rear mounting. Mounting screws to be ordered separately, see page 1.101.30.	Die-cast aluminium	Sifting

Dimensions

For cylinder Ø mm	Code	Item	A	B	C	D	E	F	G	H	I	L	M	ZJ	WH	Weight (g)
16	040721	FL012/016ALUN	18	43	55	18	29	4,5	9	5,5	10	5,4	10	39,5	4,5	34
20	040722	FL020ALUN	22	55	70	22	36	5,5	10	6,6	10	5,4	12	43	6	55
25	040723	FL025ALUN	26	60	76	26	40	5,5	10	6,6	10	5,4	12	45	6	68

Main features

32 ÷ 125 — Bores Ø

ISO — FLV..ALIS+V — Type

VDMA — MF1/MF2



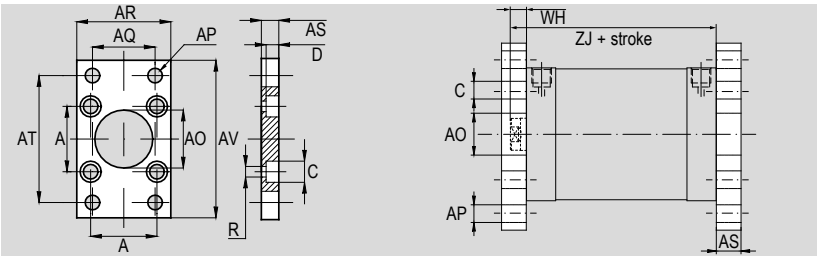

Technical data

Type	Description	Material	Treatment
FLV..ALIS+V	Mounting for cylinders in aluminium. Flange. For front or rear mounting. Supplied with screws.	Die-cast aluminium	Anodized

Dimensions

For cylinder Ø mm	Code	Item	A	ØAP	AO	R	AS	AR	AQ	AT	AV	C	D	ZJ	WH	Weight (g)
32	042150	FLV032ALIS+V	32,5	7	30	6,5	10	45	32	64	86	10,5	5	51	7	-
40	042151	FLV040ALIS+V	38	9	35	6,5	10	52	36	72	96	11	5	52	7	-
50	042152	FLV050ALIS+V	46,5	9	40	9	12	65	45	90	115	15	5,5	53	8	-
63	042153	FLV063ALIS+V	56,5	9	45	9	12	75	50	100	130	15	5,5	57	8	-
80	042154	FLV080ALIS+V	72	12	45	11	16	95	63	126	165	18	7	64	10	-
100	042155	FLV100ALIS+V	89	14	55	11	16	115	75	150	187	18	7	77	10	-
125	042156	FLV125ALIS+V	110	16	60	13	20	140	90	180	224	19	9,5	92	11	-

Mounting accessories for cylinders

Mountings in aluminium for compact cylinders ISO 21287

Main features

32 ÷ 125 ISO AS..ALIS

Bores Ø 6431 Type



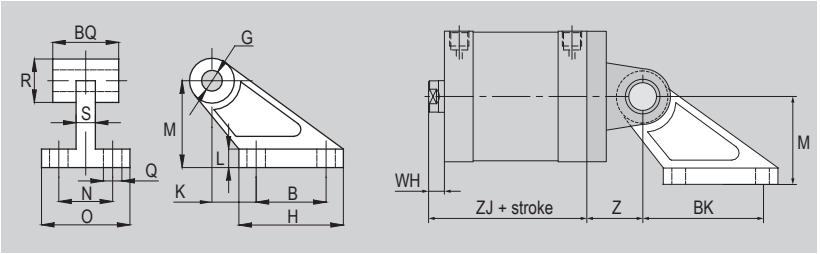

Technical data

Type	Description	Material	Treatment
AS..ALIS	Mountings for cylinders in aluminium. Rear 90° hinge. For mounting with rear female clevis type CF. Mounting screws to be ordered separately, see from page 1.101.1	Die-cast aluminium	Sifting

Dimensions

For cylinder Ø mm	Code	Item	Q	BG	H	I	L	M	N	O	S	R	BQ	G	Z	ZJ	WH	BK	Weight (g)
32	040361	AS032ALIS	7	20	37	18	8	32	25	41	9	19	26	10	22	51	7	38	54
40	040362	AS040ALIS	9	32	54	25	10	45	32	52	14	25,5	28	12	25	52	7	57	136
50	040363	AS050ALIS	9	32	54	25	10	45	32	52	14	25,5	32	12	27	53	8	57	140
63	040364	AS063ALIS	11	50	75	32	12	63	40	63	14	32	40	16	32	57	8	82	295
80	040365	AS080ALIS	11	50	75	32	12	63	40	63	14	32	50	16	36	64	10	82	313
100	040366	AS100ALIS	14	70	103	40	17	90	50	80	22	42	60	20	41	77	10	110	710
125	040367	AS125ALIS	14	70	103	40	17	90	50	80	22	46	70	25	50	92	11	110	820

Main features

32 ÷ 125 ISO P..ALIS

Bores Ø MS3 Type



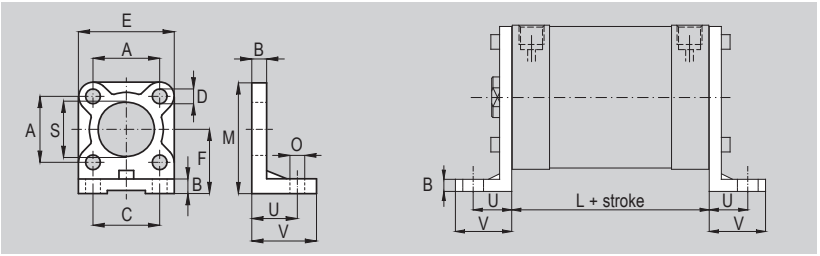

Technical data

Type	Description	Material	Treatment
P..ALIS	Mounting for cylinders in aluminium. Foot. For front or rear mounting. Supplied individually. Mounting screws to be ordered separately, see from page 1.101.1.	Die-cast aluminium	Sifting

Dimensions

For cylinder Ø mm	Code	Item	A	B	C	D	E	F	M	O	S	U	V	AH	XA	SA	Weight (g)
32	040141	P032ALIS	32,5	8	32	7	40	32	54,5	7	30	24	35	31,5	154	138	46
40	040142	P040ALIS	38	8	36	7	52	36	62	9	35	28	35	34	173	161	66
50	040143	P050ALIS	46,5	10	45	9	65	45	77,5	9	40	32	45	42,5	187	170	138
63	040144	P063ALIS	56,5	10	50	9	75	50	87,5	9	45	32	45	47,5	202	185	174
80	040145	P080ALIS	72	12	63	11	95	63	110,5	12	45	41	55	59,5	231	210	356
100	040146	P100ALIS	89	12	75	11	115	71	128	14	55	41	56	69,5	246	220	468
125	040147	P125ALIS	110	16	90	14	140	91	161	16	60	45	68	86	290	250	920

Mounting accessories for cylinders

Mountings in steel for compact cylinders ISO 21287

Main features

32 ÷ 125 ISO CF..AQIS+V

Bores Ø MP2 Type



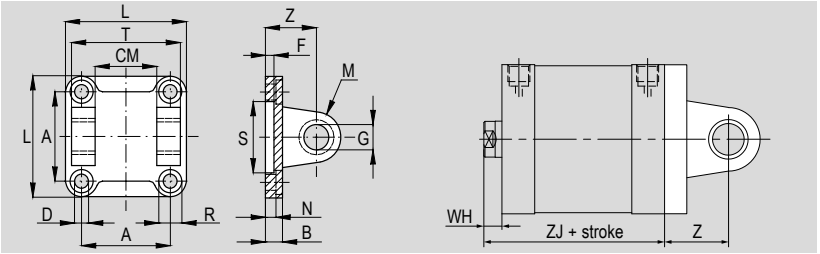

Technical data

Type	Description	Material	Treatment
CF..AQIS+V	Mounting for cylinders in steel. Rear clevis. Supplied with screws. Pin type SEC..AQIS to be ordered separately, see page 1.100.56	A105 steel	Black cataphoresis

Dimensions

For cylinder Ø mm	Code	Item	A	L	D	R	N	B	S	F	Z	G	M	CM	T	ZJ	WH	Weight (g)
32	040461	CF032AQIS+V	32,5	45	6,6	11	5,5	10	30	5	22	10	10	26	45	51	7	164
40	040462	CF040AQIS+V	38	55	6,6	11	5,5	10	35	5	25	12	12	28	52	52	7	256
50	040463	CF050AQIS+V	46,5	65	9	15	6,5	10	40	5	27	12	12	32	60	53	8	392
63	040464	CF063AQIS+V	56,5	75	9	15	6,5	12	45	5	32	16	16	40	70	57	8	594
80	040465	CF080AQIS+V	72	95	11	18	10	14	45	-	36	16	16	50	90	64	10	1102
100	040466	CF100AQIS+V	89	115	11	18	10	16	55	-	41	20	20	60	110	77	10	1802
125	040467	CF125AQIS+V	110	140	14	20	10	20	60	-	50	25	25	70	130	92	11	3493

Main features

32 ÷ 125 ISO CFS..AQIS+V

Bores Ø AB6 Type



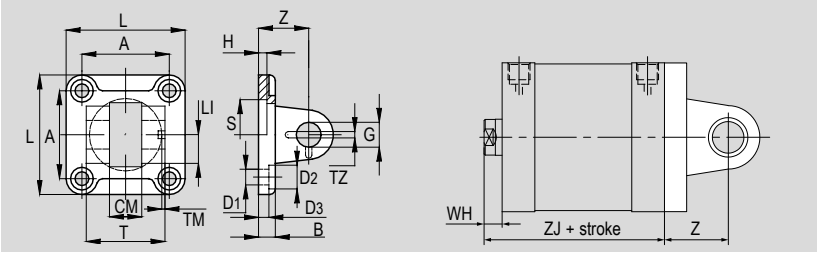

Technical data

Type	Description	Material	Treatment
CFS..AQIS+V	Mounting for cylinders in steel. Narrow rear clevis. Supplied with screws. Anti-rotation pin type SEC..ARAQIS to be ordered separately, see page 1.100.56	A105 steel	Black cataphoresis

Dimensions

For cylinder Ø mm	Code	Item	L	T	CM	A	Z	H	B	D_3	S	G	D_1	D_2	TM	TZ	LI	ZJ	WH	Weight (g)
32	040491	CFS032AQIS+V	45	34	14	32,5	22	5	10	5,5	30	10	6,6	11	3	3,3	11,5	51	7	166
40	040492	CFS040AQIS+V	55	40	16	38	25	5	10	5,5	35	12	6,6	11	4	4,3	12	52	7	256
50	040493	CFS050AQIS+V	65	45	21	46,5	27	5	10	6,5	40	16	9	15	4	4,3	14	53	8	390
63	040494	CFS063AQIS+V	75	51	21	56,5	32	5	12	6,5	45	16	9	15	4	4,3	14	57	8	600
80	040495	CFS080AQIS+V	95	65	25	72	36	5	14	10	45	20	11	18	4	4,3	16	64	10	1292
100	040496	CFS100AQIS+V	115	75	25	89	41	5	16	10	55	20	11	18	4	6,3	16	77	10	1942
125	040497	CFS125AQIS+V	140	97	37	110	50	7	20	10	60	30	14	20	6	6,3	24	92	11	3693

Mounting accessories for cylinders

Mountings in steel for compact cylinders ISO 21287

Main features

20 ÷ 25 — Bores Ø

UNI TOP — CM..AQUN — Type



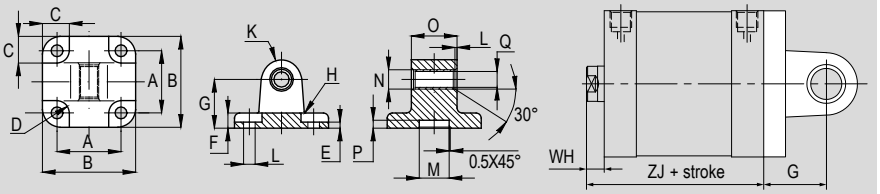

Technical data

Type	Description	Material	Treatment
CM..AQUN	Mounting for cylinders in steel. Rear eye. Screws to be ordered separately, see page 1.101.30	A105 steel	Black cataphoresis

Dimensions

For cylinder Ø mm	Code	Item	A	B	C	D	E	F	G	H	K	L	M	N	O	P	Q	V	ZJ	WH	Weight (g)
20	040732	CM020AQUN	22	34	11	5	2,6	6	20	2	8	5,5	12	10	16	3	8	14	43	6	64
25	040733	CM025AQUN	26	38	11	5	2,6	6	20	2	8	5,5	12	10	16	3	8	14	45	6	80

Main features

32 ÷ 125 — Bores Ø

ISO — MP4 — CM..AQIS+V — Type



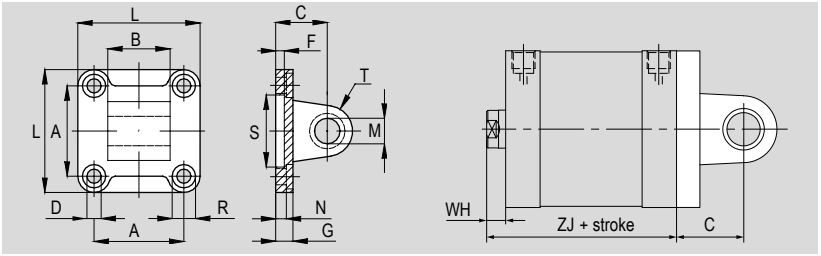

Technical data

Type	Description	Material	Treatment
CM..AQIS+V	Mounting for cylinders in steel. Rear eye. Supplied with screws.	A105 steel	Black cataphoresis

Dimensions

For cylinder Ø mm	Code	Item	A	L	D	R	N	G	S	F	C	M	T	B		ZJ	WH	Weight (g)
32	040521	CM032AQIS+V	32,5	45	6,6	11	5,5	10	30	5	22	10	10	26		51	7	202
40	040522	CM040AQIS+V	38	55	6,6	11	5,5	10	35	5	25	12	12	28		52	7	300
50	040523	CM050AQIS+V	46,5	65	9	15	6,5	10	40	5	27	12	12	32	-0,2	53	8	422
63	040524	CM063AQIS+V	56,5	75	9	15	6,5	12	45	5	32	16	16	40	-0,6	57	8	736
80	040525	CM080AQIS+V	72	95	11	18	10	14	45	5	36	16	16	50		64	10	1298
100	040526	CM100AQIS+V	89	115	11	18	10	16	55	5	41	20	20	60		77	10	2202
125	040527	CM125AQIS+V	110	140	14	20	10	20	60	7	50	25	25	70	-0,5 -1,2	92	11	3883

Mounting accessories for cylinders

Mountings in steel for compact cylinders ISO 21287

Main features

32 ÷ 125 ISO **CMS..AQIS+V**

Bores Ø | MP6 | Type

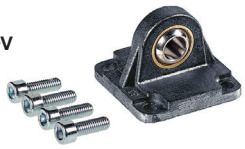

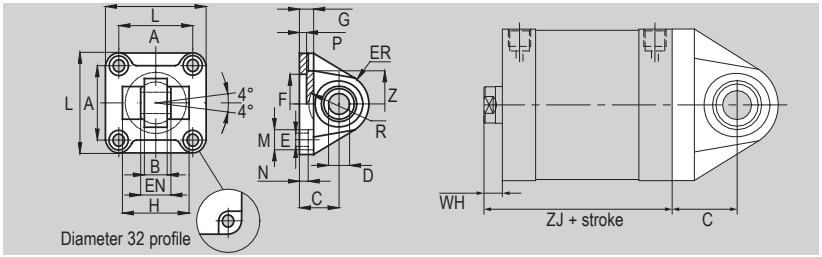

Technical data

Type	Description	Material	Treatment
CMS..AQIS+V	Mounting for cylinders in steel. Narrow rear eye with spherical bearing DIN 648K. Supplied with screws.	A 105 steel	Black cataphoresis

Dimensions

For cylinder Ø mm	Code	Item	A	B	C	D	EN	ER	F	G	E	L	M	N	P	H	R	Z	ZJ	WH	Weight (g)
32	040531	CMS032AQIS+V	32,5	10,5	22	10	14	15	30	10	6,6	45	11	5,5	5	-	-	32,5	51	7	178
40	040532	CMS040AQIS+V	38	12	25	12	16	18	35	10	6,6	55	11	5,5	5	-	-	39	52	7	282
50	040533	CMS050AQIS+V	46,5	15	27	16	21	20	40	10	9	65	15	6,5	5	51	19	47	53	8	418
63	040534	CMS063AQIS+V	56,5	15	32	16	21	23	45	12	9	75	15	6,5	5	-	-	52	57	8	645
80	040535	CMS080AQIS+V	72	18	36	20	25	27	45	14	11	95	18	10	5	70	24	67	64	10	1224
100	040536	CMS100AQIS+V	89	18	41	20	25	30	55	16	11	115	18	10	5	-	-	77	77	10	1888
125	040537	CMS125AQIS+V	110	25	50	30	37	40	60	20	13,5	140	20	10	7	-	-	98	92	11	3643

Main features

32 ÷ 125 ISO **ASS..AQIS**

Bores Ø | CS7 | Type



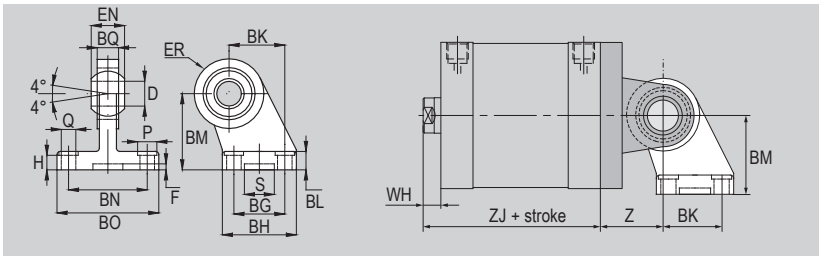

Technical data

Type	Description	Material	Treatment
ASS..AQIS	Mounting for cylinders in steel. Rear 90° hinge with spherical bearing DIN 648K. For mounting with narrow rear female clevis. Mounting screws to be ordered separately, see page 1.101.30.	A 105 steel	Black cataphoresis

Dimensions

For cylinder Ø mm	Code	Item	Q	P	BG	BH	BI	BL	BM	BN	BD	EN	ER	BQ	D	H	S	F	Z	ZJ	WH	Weight (g)
32	040551	ASS032AQIS	6,6	11	18	31	21	10	32	38	51	14	15	10,5	10	8,5	30	5	22	51	7	178
40	040552	ASS040AQIS	6,6	11	22	35	24	10	36	41	54	16	18	12	12	8,5	30	5	25	52	7	268
50	040553	ASS050AQS	9	15	30	45	33	12	45	50	65	21	20	15	16	10,5	30	5	27	53	8	458
63	040554	ASS063AQIS	9	15	35	50	37	12	50	52	67	21	23	15	16	10,5	30	5	32	57	8	550
80	040555	ASS080AQIS	11	18	40	60	47	14	63	66	86	25	27	18	20	11,5	30	5	36	64	10	970
100	040556	ASS100AQIS	11	18	50	70	55	15	71	76	96	25	30	18	20	12,5	30	5	41	77	10	1326
125	040557	ASS125AQIS	13,5	20	60	90	70	20	90	94	124	37	40	25	30	17	30	5	50	92	11	3000

Mounting accessories for cylinders

Mountings in steel for compact cylinders ISO 21287

Main features

16 ÷ 25 — Bores Ø

ISO MP3

CF — Type



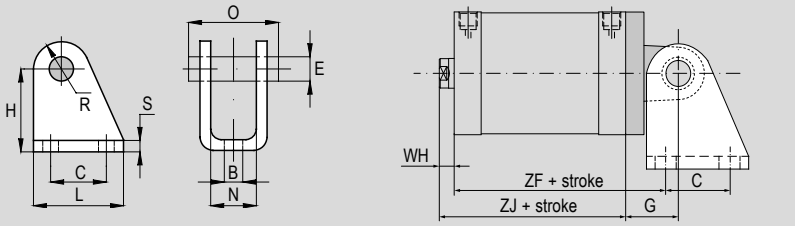

Technical data

Type	Description	Material	Treatment
CF..	Mounting for cylinders in steel. Rear 90° hinge. For mounting with male rear eye type CM. Supplied with pin e two seeger.	Steel	White zinc plating

Dimensions

For cylinder Ø mm	Code	Item	B	E	C	H	L	N	O	R	S	ZF	ZJ	WH	G	Weight (g)
16	040049	CF12-16+P	5,5	6	15	27	25	12,1	23	7	3	35	39,5	4,5	16	75
20	040050	CF20-25+P	6,6	8	20	30	32	16,1	29,5	10	4	37	43	6	20	78
25												39	45			

Main features

32 ÷ 125 — Bores Ø

ISO AB7

ASV..AQIS — Type

cetop RP 107P



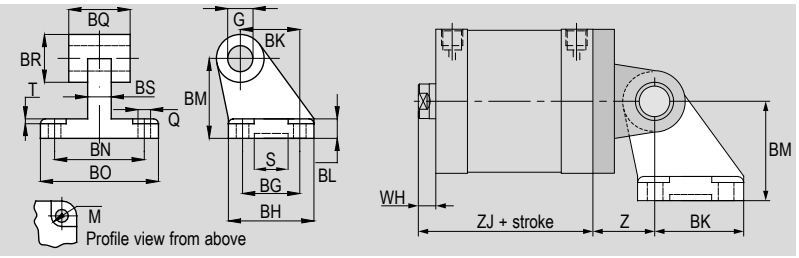

Technical data

Type	Description	Material	Treatment
ASV..AQIS	Mounting for cylinders in steel. Rear 90° hinge. For mounting with female rear clevis type CF. Mounting screws to be ordered separately, see page 1.101.30.	Steel A 105	Black cataphoresis

Dimensions

For cylinder Ø mm	Code	Item	Q	M	BG	BH	BK	BL	BM	BN	BO	BS	BR	G	T	S	BQ	Z	ZJ	WH	Weight (g)
32	040381	ASV032AQIS	6,6	11	18	31	21	8	32	38	51	10	20	10	6,5	20	26	22	51	7	184
40	040382	ASV040AQIS	6,6	11	22	35	24	10	36	41	54	10	22	12	8,5	20	28	25	52	7	264
50	040383	ASV050AQS	9	15	30	45	33	12	45	50	65	14	26	12	10,5	20	32	27	53	8	472
63	040384	ASV063AQIS	9	15	35	50	37	12	50	52	67	14	30	16	10,5	20	40	32	57	8	580
80	040385	ASV080AQIS	11	18	40	60	47	14	63	66	86	18	30	16	11,5	20	50	36	64	10	1157
100	040386	ASV100AQIS	11	18	50	70	55	15	71	76	96	20	36	20	12,5	20	60	41	77	10	1612
125	040387	ASV125AQIS	14	20	60	90	70	20	90	94	124	30	45	25	17	20	70	50	92	11	3293

Mounting accessories for cylinders

Mountings in steel for compact cylinders ISO 21287

Main features

16 ÷ 25 — Bores Ø

UNI TOP

FL..AQUN — Type



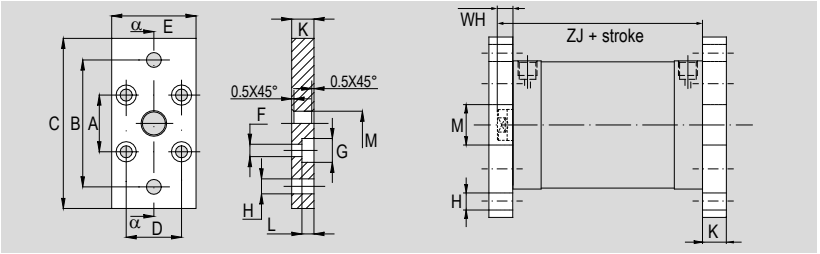

Technical data

Type	Description	Material	Treatment
FL..AQUN	Mounting for cylinders in steel. Flange. For front or rear mounting. Mounting screws to be ordered separately, see page 1.101.30.	Fe 37	White zinc plating

Dimensions

For cylinder Ø mm	Code	Item	A	B	C	D	E	F	G	H	I	L	M	ZJ	WH	Weight (g)
16	040751	FL012016AQUN	18	43	55	18	29	4,5	9	5,5	10	5,4	10	39,5	4,5	34
20	040752	FL020AQUN	22	55	70	22	36	5,5	10	6,6	10	5,4	12	43	6	55
25	040753	FL025AQUN	26	60	76	26	40	5,5	10	6,6	10	5,4	12	45	6	68

Main features

32 ÷ 125 — Bores Ø

ISO

VDMA

MF1/MF2

FLV..AQIS+V — Type



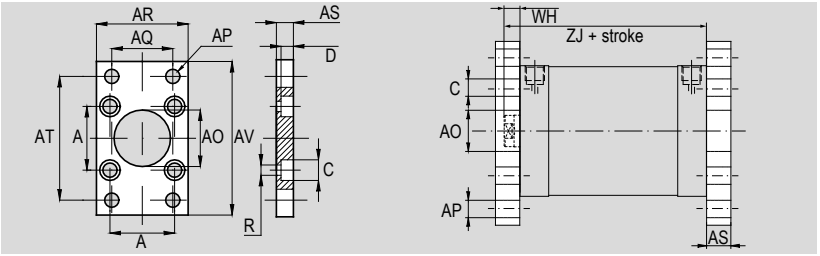

Technical data

Type	Description	Material	Treatment
FLV..AQIS+V	Mounting for cylinders in steel. Flange. For front or rear mounting. Supplied with screws.	Fe 37	White zinc plating

Dimensions

For cylinder Ø mm	Code	Item	A	ØAP	AO	R	AS	AR	AQ	AT	AV	C	D	ZJ	WH	Weight (g)
32	042119	FLV032AQIS+V	32,5	7	30	6,5	10	45	32	64	86	10,5	5	51	7	-
40	042120	FLV040AQIS+V	38	9	35	6,5	10	52	36	72	96	11	5	52	7	-
50	042121	FLV050AQIS+V	46,5	9	40	9	12	65	45	90	115	15	5,5	53	8	-
63	042122	FLV063AQIS+V	56,5	9	45	9	12	75	50	100	130	15	5,5	57	8	-
80	042123	FLV080AQIS+V	72	12	45	11	16	95	63	126	165	18	7	64	10	-
100	042124	FLV100AQIS+V	89	14	55	11	16	115	75	150	187	18	7	77	10	-
125	042125	FLV125AQIS+V	110	16	60	13	20	140	90	180	224	19	9,5	92	11	-

Mounting accessories for cylinders

Mountings in steel for compact cylinders ISO 21287

Main features

16 ÷ 25 — Bores Ø

UNI TOP — PB..AQUN — Type



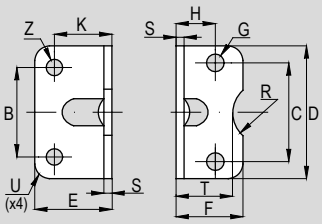

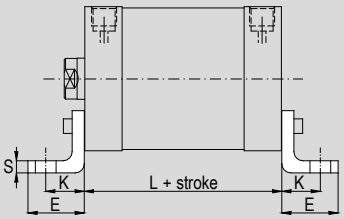

Technical data

Type	Description	Material	Treatment
PB..AQUN	Mounting for cylinders in steel. Low foot. For front or rear mounting. Supplied individually. Mounting screws to be ordered separately, see page 1.101.30.	Fe 37	White zinc plating

Dimensions

For cylinder Ø mm	Code	Item	C	B	D	E	F	G	H	K	S	T	R	U	Z	L	Weight (g)
16	040761	PB012/016AQUN	18	18	30	17,5	17,5	4,4	13	13	3	15	9	2	5,5	35	20
20	040762	PB20AQUN	22	22	36	22	22	5,4	16	16	4	17	10	2	6,6	37	32
25	040763	PB25AQUN	26	26	40	22	23	5,4	17	16	4	19	11	2	6,6	39	38

Main features

32 ÷ 125 — Bores Ø

ISO — MS1

PB..AQIS+V — Type



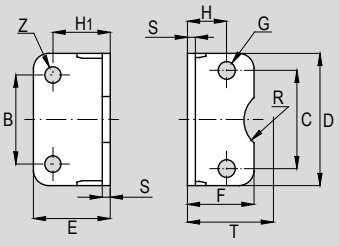

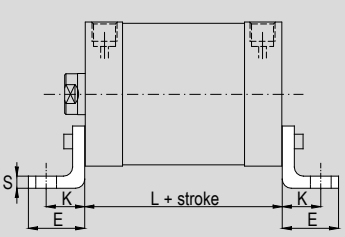

Technical data

Type	Description	Material	Treatment
PB..AQIS+V	Mounting for cylinders in steel. Low foot. For front or rear mounting. Supplied with screws. Supplied individually.	Fe 37	White zinc plating

Dimensions

For cylinder Ø mm	Code	Item	C	B	D	E	F	G	H	H_1	S	T	R	Z	AH	XA	SA	Weight (g)
32	042129	PB032AQIS+V	32,5	32	45	35	30	7	15,75	24	4	32	15	7	32	144	142	-
40	042130	PB040AQIS+V	38	36	52	36	30	7	17	28	4	36	17,5	10	36	163	161	-
50	042131	PB050AQIS+V	46,5	45	65	47	36	9	21,75	32	5	45	20	10	45	175	170	-
63	042132	PB063AQIS+V	56,5	50	75	45	35	9	21,75	32	5	50	22,5	10	50	190	185	-
80	042133	PB080AQIS+V	72	63	95	55	47	11	27	41	6	63	22,5	12	63	215	210	-
100	042134	PB100AQIS+V	89	75	115	57	53	11	26,5	41	6	71	27,5	14,5	71	230	220	-
125	042135	PB125AQIS+V	110	90	140	65	55	12,5	35	45	8	90	30	16	-	270	250	-

Mounting accessories for cylinders

Mountings in steel for compact cylinders ISO 21287

Main features

32 ÷ 125 | ISO | SEC..AQIS+SG

Bores Ø | AA4 | Type



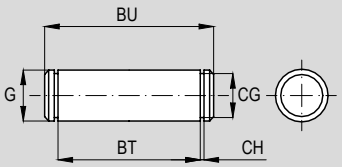

Technical data

Type	Description	Material
SEC..AQIS	Mounting for cylinders in steel. Pin. For rear female clevis ISO MP2. Supplied with two seeger.	Steel AVP

Dimensions

For cylinder Ø mm	Code	Item	G	BT	CG	CH	BU	Weight (g)
32	040261	SEC032AQIS+SG	10	46	9,6	1,1	53	32
40	040262	SEC040AQIS+SG	12	53	11,5	1,1	60	52
50	040263	SEC050AQIS+SG	12	61	11,5	1,1	68	60
63	040264	SEC063AQIS+SG	16	71	15,2	1,1	78	122
80	040265	SEC080AQIS+SG	16	91	15,2	1,1	98	152
100	040266	SEC100AQIS+SG	20	111	19	1,3	118	290
125	040267	SEC125AQIS+SG	25	132	23,9	1,3	139	530

Main features

32 ÷ 125 | ISO | SEC..ARAQIS+SG

Bores Ø | AA6 | Type



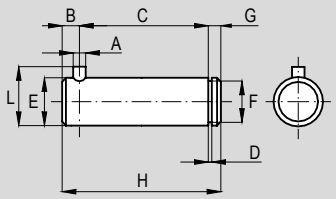

Technical data

Type	Description	Material
SEC..ARAQIS	Mounting for cylinders in steel. Anti-rotating pin. Per narrow rear female clevis ISO AB6 with bearing DIN 648K. Supplied with one seeger.	Steel AVP

Dimensions

For cylinder Ø mm	Code	Item	A	C	D	E	F	G	H	L	B		Weight (g)
32	040571	SEC032ARAQIS+SG	3	32,5	1,1	10	9,6	4	41	14	4,5		26
40	040572	SEC040ARAQIS+SG	4	38	1,1	12	11,5	4	48	16	6		42
50	040573	SEC050ARAQIS+SG	4	43	1,1	16	15,2	5	54	20	6	0	84
63	040574	SEC063ARAQIS+SG	4	49	1,1	16	15,2	5	60	20	6	-1	94
80	040575	SEC080ARAQIS+SG	4	63	1,3	20	19	6	75	24	6		184
100	040576	SEC100ARAQIS+SG	4	73	1,3	20	19	6	85	24	6		208
125	040577	SEC125ARAQIS+SG	6	94	1,6	30	28,6	7	110	36	9	0 -2	606

Mounting accessories for cylinders

Mountings in steel for compact cylinders ISO 21287

Main features

32 ÷ 125 ISO CTA..AQIS+V

Bores Ø | MT5/MT6 | Type



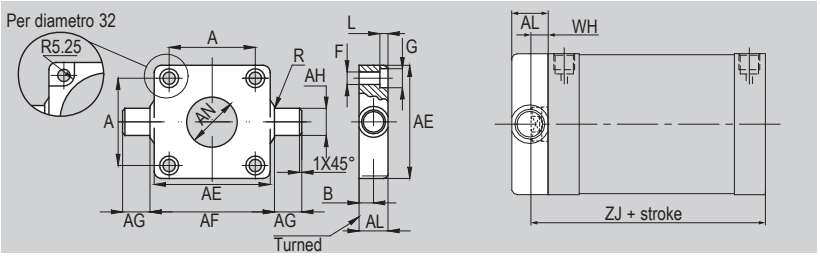

Technical data

Type	Description	Material	Treatment
CTA..AQIS+GR	Mounting for cylinders in steel. Center trunnion for heads. For front or rear mounting. Supplied with screws. Support type ST..AQIS to be ordered separately, see page 1.100.57	Steel A105	White zinc plating

Dimensions

For cylinder Ø mm	Code	Item	AE	AL	AH e9	AG h14	AF h14	AN	A	B	F	G	L	R	ZJ	WH	Weight (g)
32	040591	CTA032AQIS+V	46	14	12	12	50	30	32,5	6,5	6,5	-	6	1	51	7	137
40	040592	CTA040AQIS+V	59	19	16	16	63	35	38	9	6,5	10,5	6	1,6	54,5	7	385
50	040593	CTA050AQIS+V	69	19	16	16	75	40	46,5	9	8,5	13,5	8	1,6	54,5	8	513
63	040594	CTA063AQIS+V	84	24	20	20	90	45	56,5	11,5	8,5	13,5	8	1,6	61	8	1041
80	040595	CTA080AQIS+V	102	24	20	20	110	45	72	11,5	10,5	16,5	10	1,6	66	10	1567
100	040596	CTA100AQIS+V	125	29	25	25	132	55	89	14	10,5	16,5	10	2	81,5	10	3000
125	040598	CTA125AQIS+V	150	30	25	25	160	133	110	15	13,5	20	12	2	97	11	2400

Main features

32 ÷ 125 ISO ST..AQIS

Bores Ø | AT4 | Type



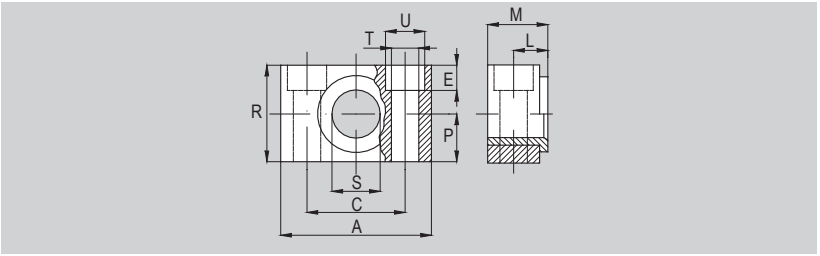

Technical data

Type	Description	Material	Treatment
ST..AQIS	Mounting for cylinders in steel. Support for center trunnion. Supplied individually.	Fe 37 - Bronze	Black cataphoresis

Dimensions

For cylinder Ø mm	Code	Item	A	M	R	P	C	S	L	U	T	E	Weight (g)
32	040681	ST032AQIS	46	18	30	15	32	12	10,5	11	6,6	7	100
40-50	040682	ST040/050AQIS	55	21	36	18	36	16	12	15	9	9	150
63-80	040684	ST063/080AQIS	65	23	40	20	42	20	13	18	11	11	234
100-125	040686	ST100/125AQIS	75	28,5	50	25	50	25	16	20	14	13	435

Mounting accessories for cylinders

Mountings in aluminium for compact cylinders UNITOP

Main features

32 ÷ 100 — Bores Ø

UNI TOP

CF..ALUN — Type



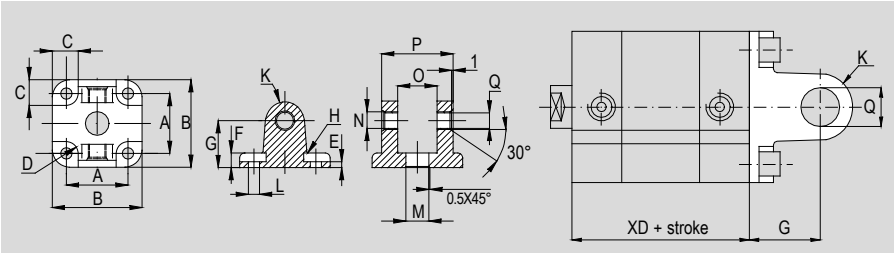

Technical data

Type	Description	Material	Treatment
CF..ALUN	Mounting for cylinders in aluminium. Rear clevis. Pin type SEC..AQIS to be ordered separately, see page 1.98.5. Mounting screws to be ordered separately, see page 1.101.40.	Die-cast aluminium	Sifting

Dimensions

For cylinder Ø mm	Code	Item	A	B	C	D	E	F	G	H	K	L	M	N	O	P	Q	XD	Weight (g)
32	040711	CF032ALUN	32	48	13,5	5,5	5,5	9	22	2,5	10	6,6	14	12	26	45	10	44,5	60
40	040712	CF040ALUN	42	58	13,5	5,5	5,5	9	25	2,5	12,5	6,6	14	14	28	52	12	45,5	104
50	040713	CF050ALUN	50	66	15,5	7,5	6,5	11	27	2,5	12,5	9	18	14	32	60	12	45,5	142
63	040714	CF063ALUN	62	83	18	7,5	6,5	11	32	4	15	9	18	18	40	70	16	50	240
80	040715	CF080ALUN	82	102	19	9	10	13	36	4	15	11	23	18	50	90	16	56	420
100	040716	CF100ALUN	103	123	19	9	10	15	41	4	20	11	28	23	60	110	20	66,5	721

Main features

12 ÷ 25 — Bores Ø

UNI TOP

CM..ALUN — Type



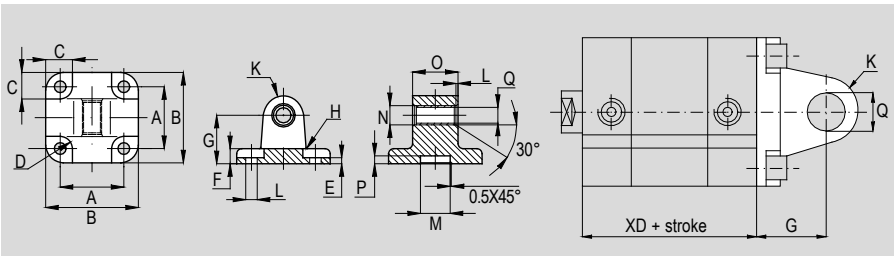

Technical data

Type	Description	Material	Treatment
CM..ALUN	Mounting for cylinders in aluminium. Rear eye. Mounting screws to be ordered separately, see page 1.101.40.	Die-cast aluminium	Sifting

Dimensions

For cylinder Ø mm	Code	Item	A	B	C	D	E	F	G	H	K	L	M	N	O	P	Q	XD	Weight (g)
12	040701	CM012/016ALUN	18	27	10	4,5	2,6	6	16	2	6	4,5	10	8	12	3	6	38	17
16																			
20	040702	CM020ALUN	22	34	11	5	2,6	6	20	2	8	5,5	12	10	16	3	8	38	21
25	040703	CM025ALUN	26	38	11	5	2,6	6	20	2	8	5,5	12	10	16	3	8	39,5	27

Mounting accessories for cylinders

Mountings in aluminium for compact cylinders UNITOP

Main features

12 ÷ 25 — Bores Ø

UNI TOP — **FL..ALUN** — Type



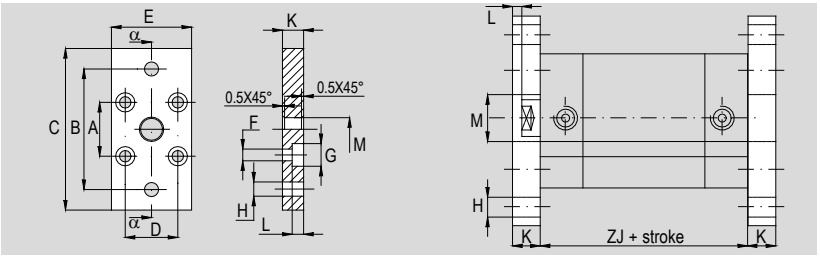

Technical data

Type	Description	Material	Treatment
FL..ALUN	Mounting for cylinders in aluminium. Flange. For front or rear mounting. Mounting screws to be ordered separately, see page 1.101.40.	Die-cast aluminium	Anodized

Dimensions

For cylinder Ø mm	Code	Item	A	B	C	D	E	F	G	H	K	L	M	XD	Weight (g)
12 16	040721	FL012/016ALUN	18	43	55	18	29	4,5	9	5,5	10	5,4	10	38	34
20	040722	FL020ALUN	22	55	70	22	36	5,5	10	6,6	10	5,4	12	38	55
25	040723	FL025ALUN	26	60	76	26	40	5,5	10	6,6	10	5,4	12	39,5	68

Main features

32 ÷ 100 — Bores Ø

UNI TOP — **FL..ALUN** — Type



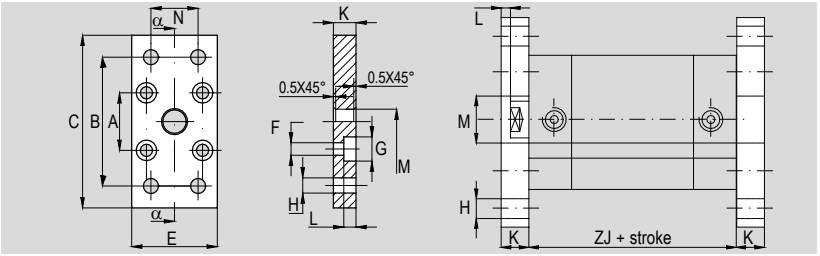

Technical data

Type	Description	Material	Treatment
FL..ALUN	Mounting for cylinders in aluminium. Flange. For front or rear mounting. Mounting screws to be ordered separately, see page 1.101.40.	Die-cast aluminium	Anodized

Dimensions

For cylinder Ø mm	Code	Item	A	B	C	D	E	F	G	H	K	L	M	N	XD	Weight (g)
32	040724	FL032ALUN	32	65	80	32	50	6,6	11	7	10	6,4	14	32	44,5	88
40	040725	FL040ALUN	42	82	102	42	60	6,6	11	9	10	6,4	14	36	45,5	143
50	040726	FL050ALUN	50	90	110	50	68	9	15	9	12	8,6	18	45	45,5	204
63	040727	FL063ALUN	62	110	130	62	87	9	15	9	15	8,6	18	50	50	411
80	040728	FL080ALUN	82	135	160	82	107	11	18	12	15	10,6	23	63	56	616
100	040729	FL100ALUN	103	163	190	103	128	11	18	14	15	10,6	28	75	66,5	890

Mounting accessories for cylinders

Mountings in aluminium for compact cylinders UNITOP

Main features

32 ÷ 100 | ISO | ASV..ALIS+V

Bores Ø | AB7 | Type

cetop RP 107P



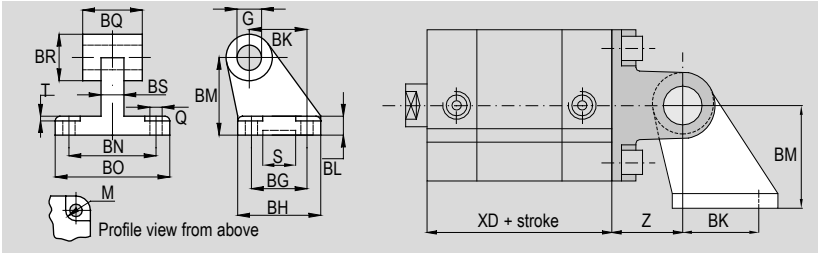

Technical data

Type	Description	Material	Treatment
ASV..ALIS+V	Mounting for cylinders in aluminium. Rear 90° hinge. For mounting with rear female clevis type CF. Supplied with screws.	Die-cast aluminium	Sifting

Dimensions

For cylinder Ø mm	Code	Item	Q	M	BG	BH	BK	BL	BM	BN	BO	BS	BR	G	T	S	BQ		XD	Z	Weight (g)
32	042081	ASV032ALIS+V	6,6	11	18	31	21	8	32	38	51	10	20	10	1,6	10,5	26		44,5	22	-
40	042082	ASV040ALIS+V	6,6	11	22	35	24	10	36	41	54	15	22	12	1,6	10,5	28		45,5	25	-
50	042083	ASV050ALIS+V	9	15	30	45	33	12	45	50	65	16	26	12	1,6	10,5	32	-0,2	45,5	27	-
63	042084	ASV063ALIS+V	9	15	35	50	37	14	50	52	67	16	30	16	1,6	10,5	40	-0,6	50	32	-
80	042085	ASV080ALIS+V	11	18	40	60	47	14	63	66	86	20	30	16	2,5	10,5	50		56	36	-
100	042086	ASV100ALIS+V	11	18	50	70	55	17	71	76	96	20	38	20	2,5	10,5	60		66,5	41	-

Main features

32 ÷ 100 | ISO | CM..ALIS+V

Bores Ø | MP4 | Type



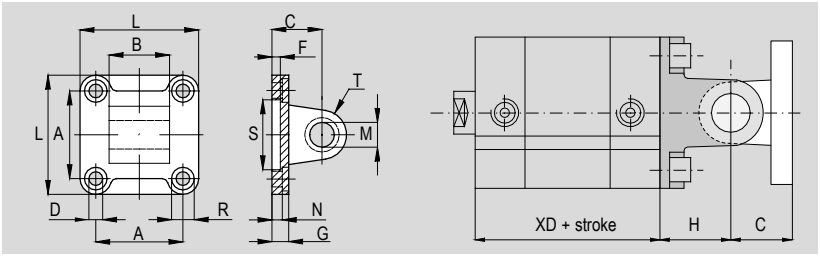

Technical data

Type	Description	Material	Treatment
CM..ALIS+V	Mounting for cylinders in aluminium. Rear eye. For mounting with rear female clevis type CF. Supplied with screws.	Die-cast aluminium	Sifting

Dimensions

For cylinder Ø mm	Code	Item	A	L	D	R	N	G	S	F	C	M	T	B		XD	H	Weight (g)
32	042061	CM032ALIS+V	32,5	45	6,6	11	5,5	9	30	5	22	10	10	26		44,5	22	-
40	042062	CM040ALIS+V	38	52	6,6	11	5,5	9	35	5	25	12	12	28		45,5	25	-
50	042063	CM050ALIS+V	46,5	65	9	15	6,5	11	40	5	27	12	12	32	-0,2	45,5	27	-
63	042064	CM063ALIS+V	56,5	75	9	15	6,5	11	45	5	32	16	16	40	-0,6	50	32	-
80	042065	CM080ALIS+V	72	95	11	18	10	14	45	5	36	16	16	50		56	36	-
100	042066	CM100ALIS+V	89	115	11	18	10	14	55	5	41	20	20	60		66,5	41	-

Mounting accessories for cylinders
Mountings in steel for compact cylinders UNITOP

Main features

32 ÷ 100 — Bores Ø

UNI TOP — CF..AQUN — Type



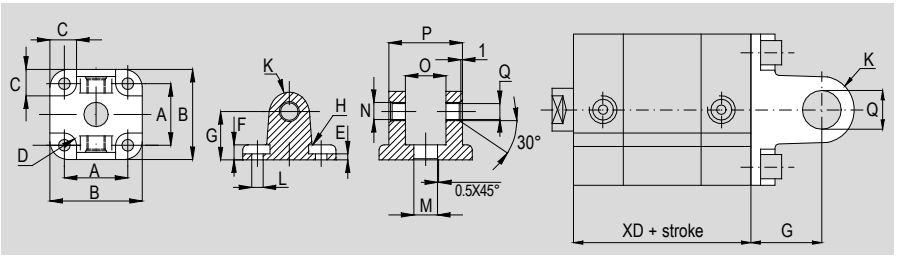

Technical data

Type	Description	Material	Treatment
CF..AQUN	Mounting for cylinders in steel. Rear clevis. Pin type SEC..AQIS to be ordered separately, see page 1.98.5. Mounting screws to be ordered separately, see page 1.101.40.	Steel A105	Black cataphoresis

Dimensions

For cylinder Ø mm	Code	Item	A	B	C	D	E	F	G	H	K	L	M	N	O	P	Q	XD	Weight (g)
32	040741	CF032AQUN	32	48	-	11	5,5	9	22	2,5	10	6,6	14	12	26	45	10	44,5	178
40	040742	CF040AQUN	42	58	-	11	5,5	9	25	2,5	12,5	6,6	14	14	28	52	12	45,5	313
50	040743	CF050AQUN	50	66	15,5	7,5	6,5	11	27	2,5	12,5	9	18	14	32	60	12	45,5	431
63	040744	CF063AQUN	62	83	-	15	6,5	11	32	4	15	9	18	18	40	70	16	50	707
80	040745	CF080AQUN	82	102	19	9	10	13	36	4	15	11	23	18	50	90	16	56	1213
100	040746	CF100AQUN	103	123	19	9	10	15	41	4	20	11	28	23	60	110	20	66,5	2200

Main features

20 ÷ 25 — Bores Ø

UNI TOP — CM..AQUN — Type



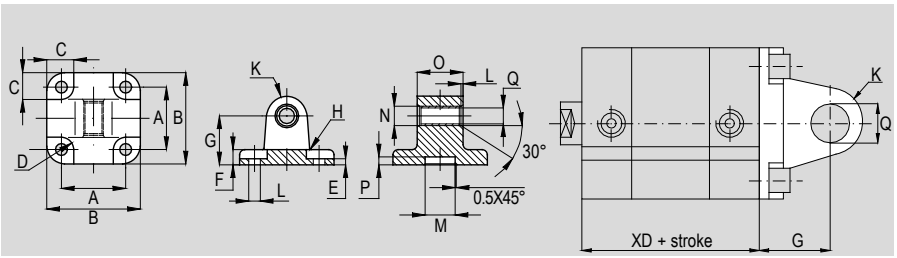

Technical data

Type	Description	Material	Treatment
CM..AQUN	Mounting for cylinders in steel. Rear eye. Mounting screws to be ordered separately, see page 1.101.40.	Steel A105	Black cataphoresis

Dimensions

For cylinder Ø mm	Code	Item	A	B	C	D	E	F	G	H	K	L	M	N	O	P	Q	XD	Weight (g)
20	040732	CM020AQUN	22	34	11	5	2,6	6	20	2	8	5,5	12	10	16	3	8	38	64
25	040733	CM025AQUN	26	38	11	5	2,6	6	20	2	8	5,5	12	10	16	3	8	39,5	80

Main features

12 ÷ 25 — Bores Ø

UNI TOP **FL..AQUN** — Type



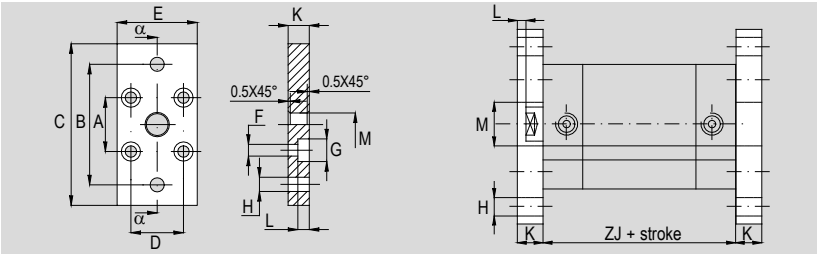

Technical data

Type	Description	Material	Treatment
FL..AQUN	Mounting for cylinders in steel. Flange. For front or rear mounting. Mounting screws to be ordered separately, see page 1.101.40.	Fe 37	White zinc plating

Dimensions

For cylinder Ø mm	Code	Item	A	B	C	D	E	F	G	H	K	L	M	XD	Weight (g)
12 16	040751	FL012016AQUN	18	43	55	18	29	4,5	9	5,5	10	5,4	10	38	34
20	040752	FL020AQUN	22	55	70	22	36	5,5	10	6,6	10	5,4	12	38	55
25	040753	FL025AQUN	26	60	76	26	40	5,5	10	6,6	10	5,4	12	39,5	68

Main features

32 ÷ 100 — Bores Ø

UNI TOP **FL..AQUN** — Type



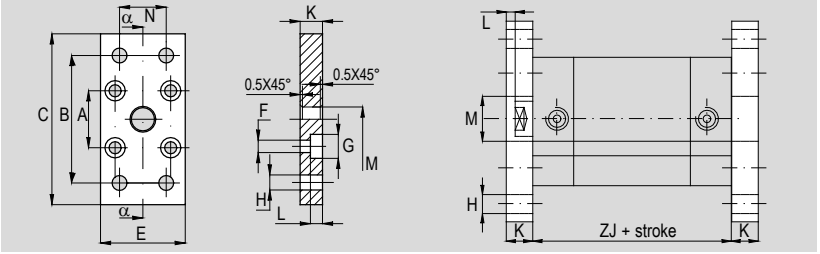

Technical data

Type	Description	Material	Treatment
FL..AQUN	Mounting for cylinders in steel. Flange. For front or rear mounting. Mounting screws to be ordered separately, see page 1.101.40.	Fe 37	White zinc plating

Dimensions

For cylinder Ø mm	Code	Item	A	B	C	D	E	F	G	H	K	L	M	N	XD	Weight (g)
32	040754	FL032AQUN	32	65	80	32	50	6,6	11	7	10	6,4	14	32	44,5	260
40	040755	FL040AQUN	42	82	102	42	60	6,6	11	9	10	6,4	14	36	45,5	420
50	040756	FL050AQUN	50	90	110	50	68	9	15	9	12	8,6	18	45	45,5	600
63	040757	FL063AQUN	62	110	130	62	87	9	15	9	15	8,6	18	50	50	1200
80	040758	FL080AQUN	82	135	160	82	107	11	18	12	15	10,6	23	63	56	1800
100	040759	FL100AQUN	103	163	190	103	128	11	18	14	15	10,6	28	75	66,5	2550

Mounting accessories for cylinders
Mountings in steel for compact cylinders UNITOP

Main features

16 ÷ 32 — Bores Ø

UNI TOP

PB..AQUN — Type



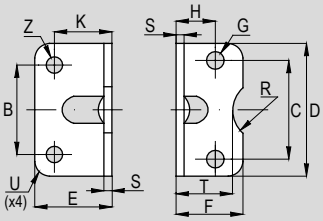

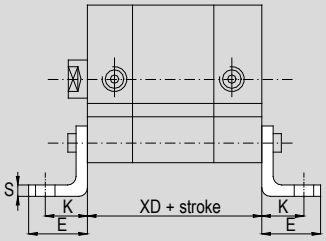

Technical data

Type	Description	Material	Treatment
PB..AQUN	Mounting for cylinders in steel. Low foot. For front or rear mounting. Supplied individually. Mounting screws to be ordered separately, see page 1.101.40.	Fe 37	White zinc plating

Dimensions

For cylinder Ø mm	Code	Item	C	B	D	E	F	G	H	K	S	T	R	U	Z	XD	Weight (g)
12 16	040761	PB012/016AQUN	18	18	30	17,5	17,5	4,4	13	13	3	15	9	2	5,5	38	20
20	040762	PB20AQUN	22	22	36	22	22	5,4	16	16	4	17	10	2	6,6	38	32
25	040763	PB25AQUN	26	26	40	22	23	5,4	17	16	4	19	11	2	6,6	39,5	38
32	040764	PB32AQUN	32	32	50	26	24	6,6	16	18	5	20	12	2	6,6	44,5	66

Main features

40 ÷ 100 — Bores Ø

UNI TOP

PB..AQUN — Type



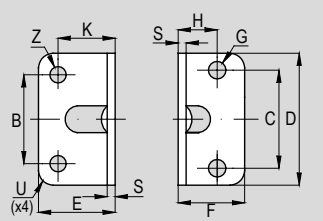

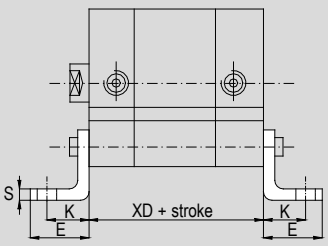

Technical data

Type	Description	Material	Treatment
PB..AQUN	Mounting for cylinders in steel. Low foot. For front or rear mounting. Supplied individually. Mounting screws to be ordered separately, see page 1.101.40.	Fe 37	White zinc plating

Dimensions

For cylinder Ø mm	Code	Item	C	B	D	E	F	G	H	K	S	U	Z	XD	Weight (g)
40	040765	PB040AQUN	42	42	60	28	29,5	6,6	21,5	20	5	5	9	45,5	100
50	040766	PB050AQUN	50	50	68	32	30	9	22	24	6	5	9	45,5	150
63	040767	PB063AQUN	62	62	84	39	39	9	28,5	27	6	5	11	50	250
80	040768	PB080AQUN	82	82	102	42	36,5	11	24,5	30	8	5	11	56	380
100	040769	PB100AQUN	103	103	123	45	38,5	11	26,5	33	8	5	13,5	66,5	500

Mounting accessories for cylinders

Mountings in steel for compact cylinders UNITOP

Main features

12 ÷ 25 — Bores Ø

ISO MP3

CF — Type



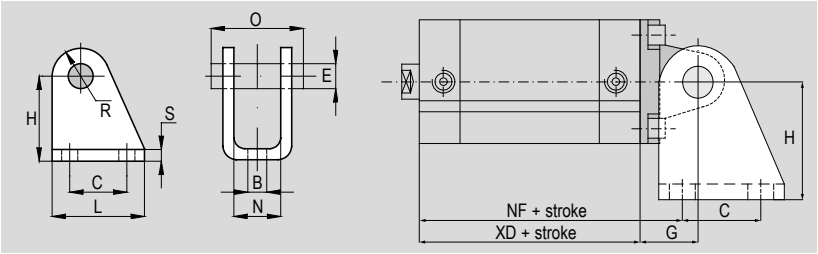

Technical data

Type	Description	Material	Treatment
CF..	Mounting for cylinders in steel. Rear 90° hinge. For mounting with rear eye. Supplied with pin and two seeger.	Steel	White zinc plating

Dimensions

For cylinder Ø mm	Code	Item	B	E	C	H	L	N	O	R	S	NF	XD	G	Weight (g)
12	040049	CF12-16+P	5,5	6	15	27	25	12,1	23	7	3	73	38	16	75
16															
20	040050	CF20-25+P	6,6	8	20	30	32	16,1	29,5	10	4	91	38	20	78
25												100	39,5		

Main features

32 ÷ 100 — Bores Ø

ISO AB7

ASV..AQIS — Type

cetop RP 107P



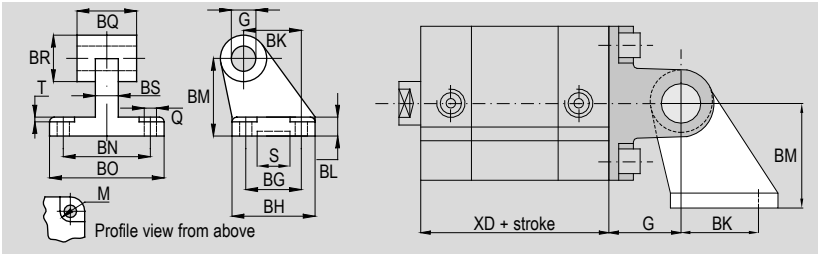

Technical data

Type	Description	Material	Treatment
ASV..AQIS	Mounting for cylinders in steel. Rear 90° hinge. For mounting with rear female clevis CF. Mounting screws to be ordered separately, see page 1.101.30.	Steel A 105	Black cataphoresis

Dimensions

For cylinder Ø mm	Code	Item	Q	M	BG	BH	BK	BL	BM	BN	BO	BS	BR	G	T	S	BQ	XD	Z	Weight (g)
32	040381	ASV032AQIS	6,6	11	18	31	21	8	32	38	51	10	20	10	6,5	20	26	44,5	22	184
40	040382	ASV040AQIS	6,6	11	22	35	24	10	36	41	54	10	22	12	8,5	20	28	45,5	25	265
50	040383	ASV050AQS	9	15	30	45	33	12	45	50	65	14	26	12	10,5	20	32	45,5	27	472
63	040384	ASV063AQIS	9	15	35	50	37	12	50	52	67	14	30	16	10,5	20	40	50	32	580
80	040385	ASV080AQIS	11	18	40	60	47	14	63	66	86	18	30	16	12,5	20	50	56	36	1157
100	040386	ASV100AQIS	11	18	50	70	55	15	71	76	96	20	36	20	12,5	20	60	66,5	41	1612

Mounting accessories for cylinders
Mountings in steel for compact cylinders UNITOP

Main features

32 ÷ 100 ISO CM..AQIS+V

Bores Ø MP4 Type



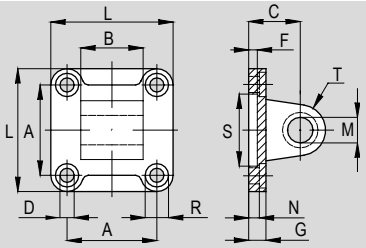

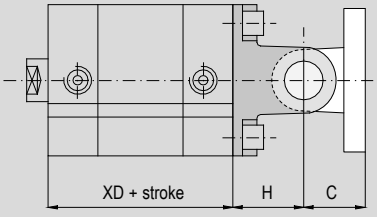

Technical data

Type	Description	Material	Treatment
CM..AQIS+V	Mounting for cylinders in steel. Rear eye. For mounting with rear female clevis type CF. Supplied with screws.	Steel A 105	Black cataphoresis

Dimensions

For cylinder Ø mm	Code	Item	A	L	D	R	N	G	S	F	C	M	T	B		XD	H	Weight (g)
32	040521	CM032AQIS+V	32,5	45	6,6	11	5,5	10	30	5	22	10	10	26		51	7	202
40	040522	CM040AQIS+V	38	55	6,6	11	5,5	10	35	5	25	12	12	28		52	7	300
50	040523	CM050AQIS+V	46,5	65	9	15	6,5	10	40	5	27	12	12	32	-0,2	53	8	422
63	040524	CM063AQIS+V	56,5	75	9	15	6,5	12	45	5	32	16	16	40	-0,6	57	8	736
80	040525	CM080AQIS+V	72	95	11	18	10	14	45	5	36	16	16	50		64	10	1298
100	040526	CM100AQIS+V	89	115	11	18	10	16	55	5	41	20	20	60		77	10	2202

Mounting accessories for cylinders

Mountings in aluminium for short stroke cylinders

Main features

16 ÷ 63 — Bores Ø

P..ALB — Type



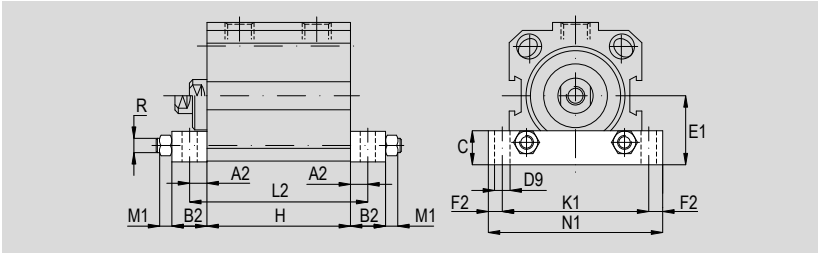

Technical data

Type	Description	Material
P..ALB	Mounting for cylinders in aluminium. Feet. For rear and front mounting. The accessory require tie rods, to be ordered separately. The kit include two feet.	Aluminium

Dimensions

For cylinder Ø mm	Code	Item	A_2	B_2	C	$ØD_9$	E_1	F_2	K_1	L_2	M_1	N_1	ØR	Weight (g)
16	040087	P16ALB	5	10	10	3,5	17	5	30	H*+10	2,4	40	M3	-
20	040088	P20ALB	5	10	10	5,5	18	5	40	H*+10	4	50	M5	-
25	040095	P25ALB	6	12	12	5,5	20	7,5	45	H*+12	4	60	M5	-
32	040089	P32ALB	6	12	12	5,5	24	5	50	H*+12	4	60	M5	-
40	040090	P40ALB	6	12	12	5,5	27,5	5	60	H*+12	4	70	M5	-
50	040091	P50ALB	7,5	15	15	6,5	32,5	5	70	H*+15	5	80	M6	-
63	040092	P63ALB	7,5	15	15	8,5	40	7,5	85	H*+15	6,5	100	M8	-

* Quote H is depending by stroke and bore of the cylinder.

Main features

80 ÷ 100 — Bores Ø

P..ALB — Type



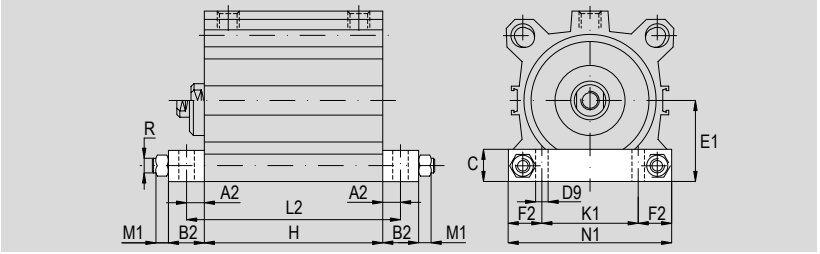

Technical data

Type	Description	Material
P..ALB	Mounting for cylinders in aluminium. Feet. For rear and front mounting. The accessory require tie rods, to be ordered separately. The kit include two feet.	Aluminium

Dimensions

For cylinder Ø mm	Code	Item	A_2	B_2	C	$ØD_9$	E_1	F_2	K_1	L_2	M_1	N_1	ØR	Weight (g)
80	040093	P80ALB	10	20	20	8,5	50	20	60	H*+20	6,5	100	M8	-
100	040094	P100ALB	10	20	20	10,5	62	22	80	H*+20	8	124	M10	-

* Quote H is depending by stroke and bore of the cylinder.

Mounting accessories for cylinders
Mountings in aluminium for short stroke cylinders

Main features

16 ÷ 100 — Bores Ø

CM..ALB — Type



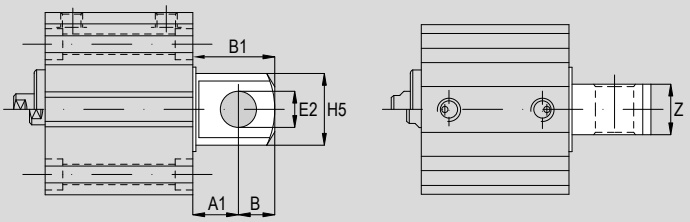

Technical data

Type	Description	Material
CM..ALB	Mounting for cylinders in aluminium. Back head with integrated rear eye. The accessory necessarily has to be ordered with the cylinder.	Aluminium

Dimensions

For cylinder Ø mm	Code	Item	A_1	B	$ØE_2$ h8	$ØH_5$	Z	B_1	Weight (g)
16	040070	CM16ALB	8	6	6	12	7	14	-
20	040071	CM20ALB	10	8	8	16	9	18	-
25	040072	CM25ALB	10	8	8	16	9	18	-
32	040073	CM32ALB	13	10	10	20	14	23	-
40	040074	CM40ALB	15	12	12	24	16	27	-
50	040075	CM50ALB	15	12	12	24	17	27	-
63	040076	CM63ALB	19	16	16	32	22	35	-
80	040077	CM80ALB	19	16	16	32	22	35	-
100	040078	CM100ALB	23	20	20	40	26	43	-

Mounting accessories for cylinders

Mountings in aluminium for rodless cylinders

Main features

18 ÷ 63 — Bores Ø

CL..S — Type



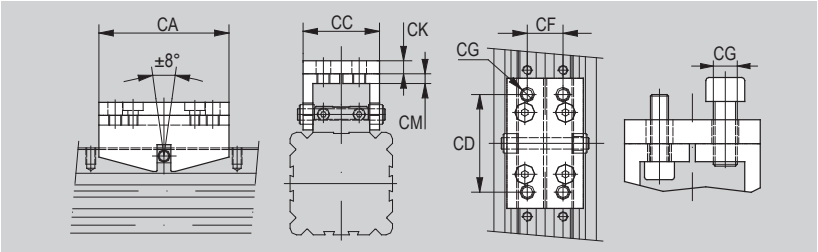

Technical data

Type	Description	Material
CL..S	Mounting for cylinders in aluminium. Light flexible coupling. Can be mounted if one guide should be connected to an existing rodless cylinder. Allow effortless transfer of action. The kit include: 1 coupling, 1 pin, 1 seeger, 2 spacers. Matching with type S1 (without option B mounted) and S2 only.	Anodised aluminium

Dimensions

For cylinder Ø mm	Code	Item	CA	CC	CD	CF	CG	CK	CM	Weight (g)
18	559038	CL18S	50	25,5	30	9	M5	4	4	-
25	559037	CL25S	60	30	40	14	M5	4	4	-
32	559032	CL32S	70	37	50	16	M6	6	6	-
40	559033	CL40S	80	47	60	22	M8	8	8	-
50	559034	CL50S	90	56	70	30	M8	8	8	-
63	559035	CL63S	100	73	80	40	M10	8	8	-

Main features

18 ÷ 63 — Bores Ø

C..S — Type



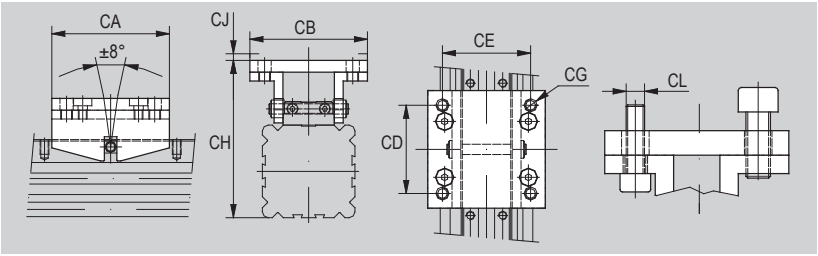

Technical data

Type	Description	Material
C..S	Mounting for cylinders in aluminium. Heavy flexible coupling. Can be mounted if one guide should be connected to an existing rodless cylinder. Allow effortless transfer of action. Compared with the light flexible coupling, this acessory should be used in case the forces are higher. The kit include: 1 coupling, 1 pin, 1 seeger, 2 spacers. Matching with type S1 (without option B mounted) and S2 only.	Anodised aluminium

Dimensions

For cylinder Ø mm	Code	Item	CA	CB	CD	CE	CG	CH	CJ	CL	Weight (g)
18	559001	C18S	50	41,5	30	34	M5	54	2,5	M4	-
25	559002	C25S	60	50	40	38	M5	70	3	M4	-
32	559003	C32S	70	60	50	48	M6	86	3,5	M5	-
40	559004	C40S	80	80	60	60	M8	107	4,5	M6	-
50	559005	C50S	90	95	70	70	M8	123	4,5	M6	-
63	559006	C63S	100	120	80	90	M10	145,5	5	M8	-

Mounting accessories for cylinders

Mountings in aluminium for rodless cylinders

Main features

18 ÷ 63
Bores Ø

SID..S
Type



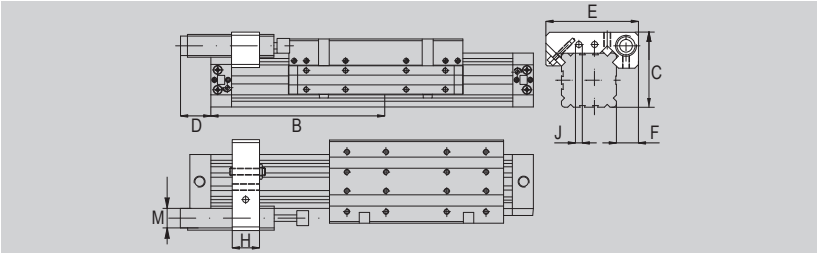

Technical data

Type	Description	Material
SID..S	Mounting for cylinders in aluminium. Mid support for shock absorbers. Matching with type S3, S5 and S6 only. Shock absorbers to be ordered separately, see page 1.105.1	Anodised aluminium

Dimensions

For cylinder Ø mm	Code	Item	B		F	D max	E	C	M	J	H	Weight (g)
			S3-S6	S5								
18	559060	SID18S	111,5	89	13	25	62	43	M10x1	-	15	-
25	559061	SID25S	140	107,5	15	60	75	56	M14x1,5	M8X1	20	-
32	559062	SID32S	160	117,5	18	60	84	69	M14x1,5	M8X1	20	-
40	559063	SID40S	203	148	23	96	105	86	M25x1,5	M8X1	30	-
50	559064	SID50S	223	158	24	96	126	104	M25x1,5	M8X1	30	-
63	559065	SID63S	284	194	25	80	140	116	M25x1,5	M8X1	40	-

Main features

18 ÷ 63
Bores Ø

STD..S
Type



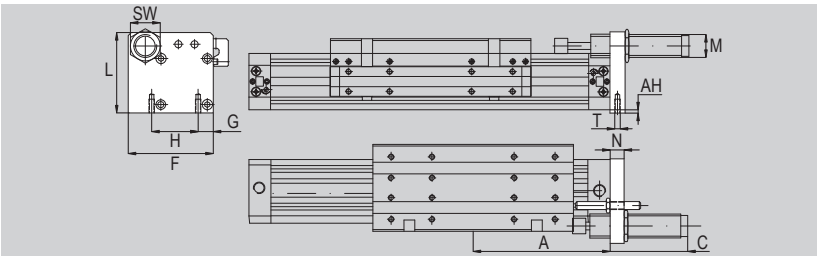

Technical data

Type	Description	Material
STD..S	Mounting for cylinders in aluminium. End support for shock absorbers with adjustable mechanical stop. Matching with type S3, S5 and S6 only. Shock absorbers to be ordered separately, see page 1.105.1	Anodised aluminium

Dimensions

For cylinder Ø mm	Code	Item	A		AH	C	F	G	H	M	N	SW	L	T	Weight (g)
			S3-S6	S5											
18	559070	STD18S	80	57,5	2	32	43.5	8	23.5	M10x1	8	13	45	M3x10	-
25	559071	STD25S	100	67,5	2	65	57	12,5	33	M14x1,5	10	17	58	M4x10	-
32	559072	STD32S	120	77,5	3	70	70	14,5	41	M14x1,5	10	17	71,5	M5x12	-
40	559073	STD40S	150	95	3	78	93	16	51	M25x1,5	15	32	89	M6x15	-
50	559074	STD50S	180	105	3	80	102	22,5	63	M25x1,5	15	32	105	M8x20	-
63	559075	STD63S	215	125	4,5	80	118.5	20	78	M25x1,5	15	32	122	M8x20	-

Mounting accessories for cylinders

Mountings in aluminium for rodless cylinders

Main features

18 ÷ 63
Bores Ø

SI..S
Type



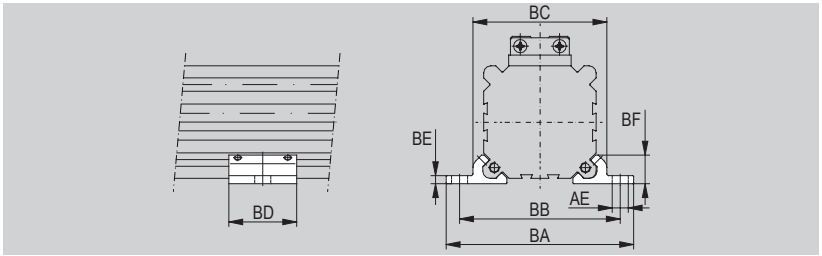

Technical data

Type	Description	Material
SI..S	Mounting for cylinders in aluminium. Light mid support. The kit include: 2 light mid supports and 8 mounting screws. The mid supports are to be used as a backet in case of barrel bending. It is recommended to install the stand at the end of the barrel and for avoid sliding, to secure it with two coarse-headed front screws. Matching with type S1 (without option B mounted), S2 and S4 only.	Anodised aluminium

Dimensions

For cylinder Ø mm	Code	Item	ØAE	BA	BB	BC	BD	BE	BF	Weight (g)
18	559020	SI18S	6	56	46	36,5	23	2,5	8,25	-
25	559021	SI25S	6	70	60	50	28	3,5	11	-
32	559022	SI32S	7	85	73	61,5	33	4	13,8	-
40	559023	SI40S	9	105	90	75	38	4,5	16	-
50	559024	SI50S	9	122	106	91	43	5	19	-
63	559025	SI63S	11	144	125	107	48	6	22	-

Main features

18 ÷ 63
Bores Ø

SIP..S
Type



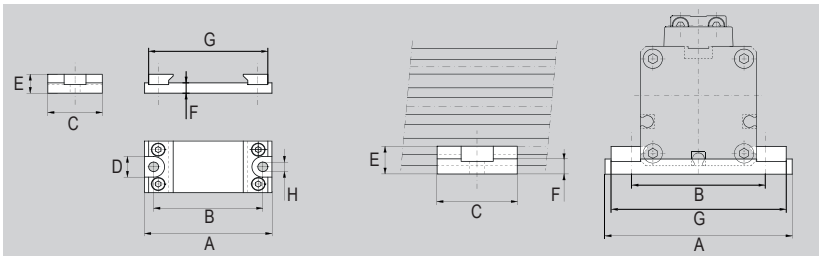

Technical data

Type	Description	Material
SIP..S	Mounting for cylinders in aluminium. Heavy mid support. The kit include: 2 heavy mid supports and 8 mounting screws. The mid supports are to be used as a backet in case of barrel bending. It is recommended to install the stand at the end of the barrel and for avoid sliding, to secure it with two coarse-headed front screws. Matching with type S1 (without option B mounted), S2 and S4 only.	Anodised aluminium

Dimensions

For cylinder Ø mm	Code	Item	ØA	B	C	D	E	F	G	ØH	Weight (g)
18	559102	SIP18S	56	46	30	12	11	6	50.6	5.5	-
25	559103	SIP25S	70	60	30	12	13	6	65.5	5.5	-
32	559104	SIP32S	85	73	40	12.5	15	6	77.5	6.6	-
40	559105	SIP40S	105	90.5	40	16	18	8	90.5	9	-
50	559106	SIP50S	122	105	40	16	20.5	8	107.5	9	-
63	559107	SIP63S	144	125	50	19	21.5	8	122.5	11	-

Mounting accessories for cylinders

Mountings in aluminium for rodless cylinders

Main features

18 ÷ 63 — Bores Ø

P..S — Type



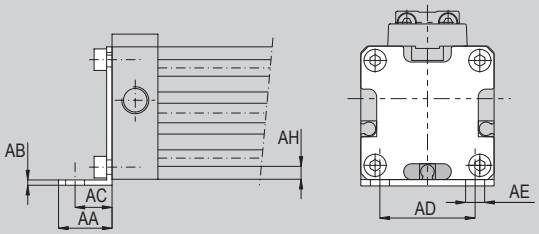

Technical data

Type	Description	Material
P..S	Mounting for cylinders in aluminium. Light foot. For mounting on rodless cylinder in four possible positions. The kit include: 2 light feet e 8 mounting screws. Matching with type S1, S2, S3, S4, S5 and S6.	Anodised aluminium

Dimensions

For cylinder Ø mm	Code	Item	AA	AB	AC	AD	ØAE	AH	Weight (g)
18	559010	P18S	15	2	10	20	6	2	-
25	559011	P25S	18	2	12,5	30	6	2	-
32	559012	P32S	20	2,5	13,5	40	7	3	-
40	559013	P40S	30	3	17,5	50	9	3,5	-
50	559014	P50S	28	3	20	60	9	3	-
63	559015	P63S	30	3	21	75	11	4,5	-

Main features

18 ÷ 63 — Bores Ø

PP..S — Type



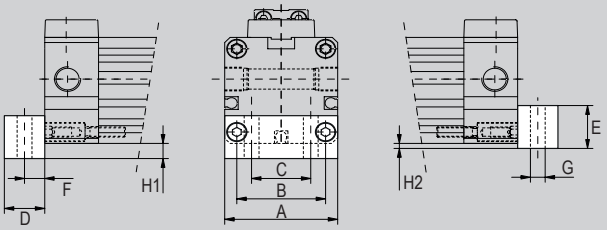

Technical data

Type	Description	Material
PP..S	Mounting for cylinders in aluminium. Heavy foot. For mounting on rodless cylinder in four possible positions. The kit include: 2 heavy feet e 4 mounting screws. Matching with type S1, S2, S3, S4, S5 and S6	Anodised aluminium

Dimensions

For cylinder Ø mm	Code	Item	A	B	C	D	E	F	ØG	H1	H2	Weight (g)
18	559096	PP18S	30	23.5	14	10	14.5	5	4.5	6	2	-
25	559097	PP25S	42	33	22	15	17	7.5	5.5	6	2	-
32	559098	PP32S	52	41	23.5	15	20	7.5	7	6	3	-
40	559099	PP40S	63	51	30	15	23	7.5	9	8	3	-
50	559100	PP50S	78	63	39	16	26	8	9	8	3	-
63	559101	PP63S	93	78	52	20	27.5	10	11	8	4.5	-

Mounting accessories for cylinders
Mountings for hand grips

Main features

10 ÷ 32 — Bores Ø

PM — Type

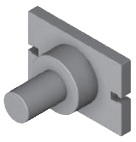

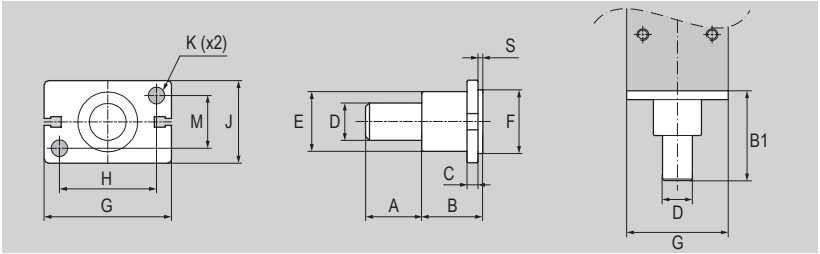

Technical data

Type	Description	Material
..PM	Mounting for hand grips in aluminium. Mounting with male pin. Compatible with types PAB - PAC - PPB.	Aluminium

Dimensions

For cylinder Ø mm	Code	Item	A	B	B1	C	ØD	ØE	ØF	G	H	M	J	ØK	S	Weight (g)
10	170655	10PM	10	10	18,7	2	8	12	11	23	17	10	16	3,5	1,3	-
12	170665	12PM	10	10	18,7	2	8	12	13	27	20	10	16	3,5	1,3	-
16	075058	16PM	15	15	28,7	3	10	16	17	34	26	14	22	4,5	1,3	-
20	075059	20PM	15	15	28,7	3	10	18	21	45	35	16	26	5,5	1,3	-
25	075064	25PM	25	17	40,7	5	14	26	26	52	40	20	32	6,5	1,3	-
32	075065	32PM	25	20	43,7	6	16	30	34	60	46	26	40	6,6	1,3	-

Main features

10 ÷ 32 — Bores Ø

PF — Type

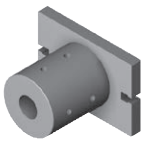

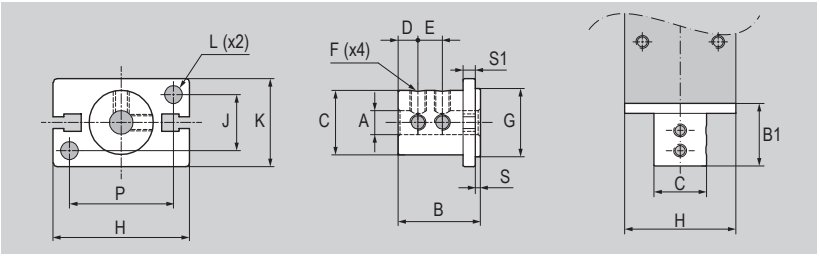

Technical data

Type	Description	Material
..PF	Mounting for hand grips in aluminium. Mounting with female pin. Compatible with types PAB - PAC - PPB - PPC.	Aluminium

Dimensions

For cylinder Ø mm	Code	Item	ØA	B	B1	ØC	D	E	F	ØG	H	P	J	K	ØL	S	S1	Weight (g)
10	170656	10PF	4	15	13,7	10	5	-	M3x0,5p	11	23	17	10	16	3,5	1,3	3	-
12	170666	12PF	4	15	13,7	12	5	-	M3x0,5p	13	27	20	10	16	3,5	1,3	3	-
16	075066	16PF	6	20,5	19,2	16	5	6	M4x0,7p	17	34	26	14	22	4,5	1,3	3	-
20	075067	20PF	8	20,5	19,2	20	7	7	M4x0,7p	21	45	35	16	26	5,5	1,3	3	-
25	075068	25PF	10	30,5	29,2	25	8	10	M4x0,7p	26	52	40	20	32	6,5	1,3	3	-
32	075069	32PF	12	40,5	39,2	32	10	15	M4x0,7p	34	60	46	26	40	6,5	1,3	3	-

Mounting accessories for cylinders
Mountings for hand grips

Main features

25 ÷ 100 — Bores Ø

PTD — Type

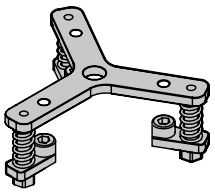

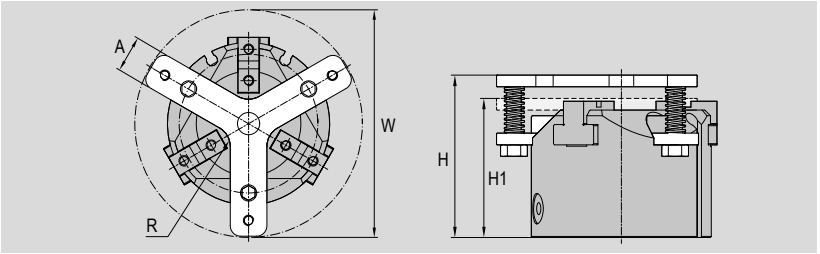

Technical data

Type	Description	Material
..PTD	Mounting for hand grips in stainless steel. Mounting plate. Supplied with screws and nuts. Compatible with type PPE.	Stainless Steel

Dimensions

For cylinder Ø mm	Code	Item	A	R	W	H	H_1	Weight (g)
25	170657	25PTD	9	6	70	46.5	40	-
32	170658	32PTD	10	6	79	51	45	-
40	170659	40PTD	13	8	87	56	48	-
50	170660	50PTD	14	8	96	64	56	-
63	170661	63PTD	16	8	121	77	67	-
80	170662	80PTD	20	10	140	92	82	-
100	170663	100PTD	25	15	171	110	95	-

Mounting accessories for cylinders
Connecting bracket for slide units

Main features

32 ÷ 100 — Bores Ø

SCSG — Type



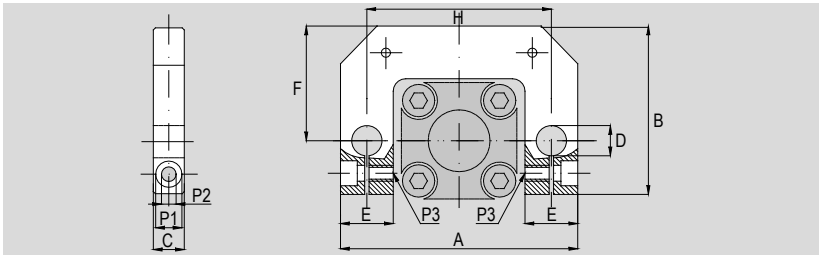

Technical data

Type	Description	Material
SCSG..	Connecting bracket for slide units. For mounting on slide units for cylinders ISO 15552. Supplied with screws.	Anodised aluminium

Dimensions

For cylinder Ø mm	Code	Item	A	B	C	ØD	E	F	H	P_1	P_2	P_3	Weight (g)
32	077901	SCSG032	95	68	12	12	21	46	74	10,5	6,5	M6	-
40	077902	SCSG040	113	78	15	15	26	56	87	10,5	6,5	M6	-
50	077903	SCSG050	135	98	17	20	30	66	104	10,5	6,5	M6	-
63	077904	SCSG063	149	118	17	20	31	78	119	13,5	8,5	M8	-
80	077905	SCSG080	187	142	20	25	39	99	148	13,5	8,5	M8	-
100	077906	SCSG100	211	163	20	25	39	114	172	13,5	8,5	M8	-

Notes

Mounting accessories for cylinders

Mounting screws for cylinders ISO 15552

Main features

32 ÷ 320 — Bores Ø

UNI 5931

VTCEI — Type

Hexagon socket flat head screws, conforming to UNI 5931 standards, in steel, suitable for mounting accessory of cylinders ISO 15552.



32 ÷ 320 — Bores Ø

DIN 6912

VBTR — Type

Flat head allen screw, conforming to DIN 6912 standards, in steel, suitable for mounting accessory of cylinders ISO 15552.



Technical data, matching and codes of screws in steel type VTCEI and type VBTR

For cylinder Ø mm	Code	Item	Compliance	Matching with mounting accessories							
				CF	CM	CFS	CMS	FLV	PB	CFA	CTA
Ø 32	040771	VTCEIM6x18	UNI 5931	●	●	●	●	–	●	–	–
	040782	VBTRM6x18	DIN 6912	–	–	–	–	●	–	–	–
	040691	VTCEIM6x20	UNI 5931	–	–	–	–	–	–	●	●
Ø 40	040771	VTCEIM6x18	UNI 5931	●	●	●	●	–	●	–	–
	040782	VBTRM6x18	DIN 6912	–	–	–	–	●	–	–	–
	040691	VTCEIM6x20	UNI 5931	–	–	–	–	–	–	●	●
	880174	VTCEIM6x25	UNI 5931	–	–	–	–	–	–	–	●
Ø 50	881144	VTCEIM8x16	UNI 5931	–	–	–	–	–	●	–	–
	040772	VTCEIM8x20	UNI 5931	●	●	●	●	–	–	●	–
	040783	VBTRM8x20	DIN 6912	–	–	–	–	●	–	–	–
	040692	VTCEIM8x25	UNI 5931	–	–	–	–	–	–	–	●
Ø 63	881144	VTCEIM8x16	UNI 5931	–	–	–	–	–	●	–	–
	040772	VTCEIM8x20	UNI 5931	●	●	●	●	–	–	–	–
	040783	VBTRM8x20	DIN 6912	–	–	–	–	●	–	–	–
	040692	VTCEIM8x25	UNI 5931	–	–	–	–	–	–	●	–
	880824	VTCEIM8x30	UNI 5931	–	–	–	–	–	–	–	●
Ø 80	040773	VTCEIM10x20	UNI 5931	–	–	–	–	–	●	–	–
	040784	VBTRM10x20	DIN 6912	–	–	–	–	●	–	–	–
	881228	VTCEIM10x25	UNI 5931	●	●	●	●	–	–	–	–
	040693	VTCEIM10x30	UNI 5931	–	–	–	–	–	–	–	●
Ø 100	040773	VTCEIM10x20	UNI 5931	–	–	–	–	–	●	–	–
	040784	VBTRM10x20	DIN 6912	–	–	–	–	●	–	–	–
	881228	VTCEIM10x25	UNI 5931	●	●	●	●	–	–	–	–
	040693	VTCEIM10x30	UNI 5931	–	–	–	–	–	–	●	–
	883537	VTCEIM10x35	UNI 5931	–	–	–	–	–	–	–	●
Ø 125	040774	VTCEIM12x25	UNI 5931	–	–	–	–	–	●	–	–
	883538	VTCEIM12x30	UNI 5931	●	●	●	●	–	–	–	–
	883539	VBTRM12x30	DIN 6912	–	–	–	–	●	–	–	–
Ø 160	040775	VTCEIM16x30	UNI 5931	●	●	●	●	–	●	–	–
	883540	VBTRM16x30	DIN 6912	–	–	–	–	●	–	–	–
	040695	VTCEIM16x40	UNI 5931	–	–	–	–	–	–	–	–
Ø 200	040775	VTCEIM16x30	UNI 5931	●	●	●	●	–	●	–	–
	883540	VBTRM16x30	DIN 6912	–	–	–	–	●	–	–	–
Ø 250	883542	VTCEIM20x35	UNI 5931	●	●	–	–	–	●	–	–
	883543	VBTRM20x35	DIN 6912	–	–	–	–	●	–	–	–
Ø 320	883544	VTCEIM24x40	UNI 5931	●	●	–	–	–	–	–	–
	883545	VBTRM24x40	DIN 6912	–	–	–	–	●	–	–	–

Key

● allowed matching; – not allowed matching

Mounting accessories for cylinders

Mounting nuts e growers for cylinders CNOMO

Main features

25 ÷ 200 | UNI | DIN | D

Bores Ø | 5589 | 936 | Type

Nuts conforming to UNI 5589 and DIN 936 standards, in steel, suitable for mounting accessory of cylinders CNOMO.



Technical data, matching and codes of nuts in steel type D

For cylinder Ø mm	Code	Item	Compliance	Matching with mounting accessories				
				CF	AN	P	FL	PB
Ø 25 ÷ 40	041450	D6x1	UNI 5589	●	●	●	●	●
Ø 50 ÷ 63	041451	D8x1,25	UNI 5589	●	●	●	●	●
Ø 80 ÷ 100	041453	D10x1,5	UNI 5589	●	●	●	●	●
Ø 125	041460	D12x1,75	UNI 5589	●	●	●	●	●
Ø 160 ÷ 200	880207	D16x2	UNI 5589	●	●	●	●	●

Key

● allowed matching; - not allowed matching

Main features

25 ÷ 200 | DIN | M

Bores Ø | 127 B | Type

Grower conforming to DIN 127 B standards in steel, suitable for mounting accessory of cylinders CNOMO.



Technical data, matching and codes of grower in steel type M

For cylinder Ø mm	Code	Item	Compliance	Matching with mounting accessories				
				CF	AN	P	FL	PB
Ø 25 ÷ 40	880166	M6ZB	DIN 127 B	●	●	●	●	●
Ø 50 ÷ 63	880066	M8ZB	DIN 127 B	●	●	●	●	●
Ø 80 ÷ 100	078384	M10ZB	DIN 127 B	●	●	●	●	●
Ø 125	880784	M12ZB	DIN 127 B	●	●	●	●	●
Ø 160 ÷ 200	078401	M16ZB	DIN 127 B	●	●	●	●	●

Key

● allowed matching; - not allowed matching

Mounting accessories for cylinders

Mounting screws for compact cylinders ISO 21287

Main features

16 ÷ 125 — Bores Ø

UNI 5931

VTCEI — Type

Hexagon socket flat head screws, conforming to UNI 5931 standards, in steel, suitable for mounting accessory of compact cylinders ISO 21287.



16 ÷ 125 — Bores Ø

DIN 6912

VBTR — Type

Flat head allen screw , conforming to DIN 6912 standards, in steel, suitable for mounting accessory of compact cylinders ISO 21287.



Technical data, matching and codes of screws in steel type VTCEI and type VBTR

For cylinder Ø mm	Code	Item	Compliance	Matching with mounting accessories						
				CF	CM	CFS	CMS	FLV	PB	CTA
Ø 16	880220	VTCEIM4x12	UNI 5931	–	●	–	–	–	●	–
	880842	VTCEIM4x16	UNI 5931	–	–	–	–	●	–	–
Ø 20 ÷ 25	880517	VTCEIM5x14	UNI 5931	–	●	–	–	●	–	–
	880164	VTCEIM5x20	UNI 5931	–	–	–	–	–	●	–
Ø 32	040771	VTCEIM6x18	UNI 5931	●	●	●	●	–	●	–
	040782	VBTRM6x18	DIN 6912	–	–	–	–	●	–	–
	040691	VTCEIM6x20	UNI 5931	–	–	–	–	–	–	●
Ø 40	040771	VTCEIM6x18	UNI 5931	●	●	●	●	–	●	–
	040782	VBTRM6x18	DIN 6912	–	–	–	–	●	–	–
	040691	VTCEIM6x20	UNI 5931	–	–	–	–	–	–	●
	880174	VTCEIM6x25	UNI 5931	–	–	–	–	–	●	–
Ø 50	881144	VTCEIM8x16	UNI 5931	–	–	–	–	–	●	–
	040772	VTCEIM8x20	UNI 5931	●	●	●	●	–	–	–
	040783	VBTRM8x20	DIN 6912	–	–	–	–	●	–	–
	040692	VTCEIM8x25	UNI 5931	–	–	–	–	–	–	●
Ø 63	881144	VTCEIM8x16	UNI 5931	–	–	–	–	–	●	–
	040772	VTCEIM8x20	UNI 5931	●	●	●	●	–	–	–
	040783	VBTRM8x20	DIN 6912	–	–	–	–	●	–	–
	880824	VTCEIM8x30	UNI 5931	–	–	–	–	–	–	●
Ø 80	040773	VTCEIM10x20	UNI 5931	–	–	–	–	–	●	–
	040784	VBTRM10x20	DIN 6912	–	–	–	–	●	–	–
	881228	VTCEIM10x25	UNI 5931	●	●	●	●	–	–	–
	040693	VTCEIM10x30	UNI 5931	–	–	–	–	–	–	●
Ø 100	040773	VTCEIM10x20	UNI 5931	–	–	–	–	–	●	–
	040784	VBTRM10x20	DIN 6912	–	–	–	–	●	–	–
	881228	VTCEIM10x25	UNI 5931	●	●	●	●	–	–	–
	883537	VTCEIM10x35	UNI 5931	–	–	–	–	–	–	●
Ø 125	040774	VTCEIM12x25	UNI 5931	–	–	–	–	–	●	–
	883538	VTCEIM12x30	UNI 5931	●	●	●	●	–	–	–
	883539	VBTRM12x30	DIN 6912	–	–	–	–	●	–	–

Key

● allowed matching; – not allowed matching

Mounting accessories for cylinders

Mounting screws for compact cylinders UNITOP

Main features

12 ÷ 100	UNI	VTCEI	Hexagon socket flat head screws, conforming to UNI 5931 standards, in steel, suitable for mounting accessory of compact cylinders UNITOP.
Bores Ø	5931	Type	



Technical data, matching and codes of screws in steel type VTCEI

For cylinder Ø mm	Code	Item	Compliance	Matching with mounting accessories			
				CF	CM	FL	PB
Ø 12 ÷ 16	880220	VTCEIM4x12	UNI 5931	-	●	-	●
	880842	VTCEIM4x16	UNI 5931	-	-	●	-
Ø 20 ÷ 25	880517	VTCEIM5x14	UNI 5931	-	●	●	-
	880164	VTCEIM5x20	UNI 5931	-	-	-	●
Ø 32 ÷ 40	880179	VTCEIM6x16	UNI 5931	-	-	●	-
	040771	VTCEIM6x18	UNI 5931	●	-	-	●
Ø 50	881144	VTCEIM8x16	UNI 5931	-	-	●	-
	040772	VTCEIM8x20	UNI 5931	●	-	-	●
Ø 63 ÷ 100	881228	VTCEIM10x25	UNI 5931	●	-	●	●

Key
● allowed matching; - not allowed matching

ADJUSTABLE
shock absorbers



Find out our
key products

- **Solution for most applications**
- **Easy and intuitive choice**
- **Excellent value for money**
- **Wide availability**
- **Fast delivery**

Characteristics

Series of adjustable hydraulic shock absorbers de-energising the impact on the rod by the displacement of oil from one chamber to another. This displacement is controlled by a valve and a throttling mechanism according to the adjustment brought in. The adjustment is carried out by a nut set in the rear end. The adjusting field is from 0 to 9 and the nut is provided with a stopper grub screw. The optimal cushion is obtained moving the nut towards 9 if the cushion is too high at the beginning of the stroke; while moving the nut towards 0 if the cushion is too high near the end of the stroke.
The best choice of the shock absorber could be done easily following the instructions on the side page.
Supplied as standard in compliance with Reach and RoHS directives.

Type DR

from page 1.105.10



Adjustable hydraulic shock absorbers without mechanical stop. Is recomanded an external mechanical stopper at 0,5 - 1 mm, before the end of the stroke.

Type DRF

from page 1.105.10



Adjustable hydraulic shock absorbers with mechanical stopper included.

How to choose

1. Precisely determine the data of the problem, that is the calculation factors m, v, F, x, s, in the table below.
2. Calculate the kinetic energy of the mass:

   $W_1 = 0{,}5 \cdot m \cdot v_2$ (Nm)

   Choose a cushioning with a capacity per cycle higher than the calculated value. The cushion length chosen must be used at point 3).
3. If there is an external motion force (hydraulic or pneumatic cylinder, motor, gravity, etc.) calculate the work done:

   $W_2 = F \cdot s$ (Nm)
4. Calculate the total energy that must be dissipated per cycle:

   $W_3 = W_1 + W_2$ (Nm)

   Check that the value obtained is within the capacity limits of the chosen cushioning. Otherwise you must consider a cushioning with higher cushion length or diameter and in case calculate W2 and W3 again.
   It can be necessary to compare cushionings with different cushion lengths and calculate again each time.
5. It is better to choose a cushioning with a capacity 25 per cent higher than the required one in order to:
   a) let following possible increases of the impact energy;
   b) Work with safe margins when velocities are not easily valuable;
   c) make sure that the cushioning lasts long, especially when working in dusty or contaminated environments.
6. Calculate the efficiency measurement:

   $$ME = \frac{W_3 \cdot 2}{V_2} \text{ (Kg)}$$

   Check that the value obtained is within the limits indicated for the chosen cushioning and this to get a linear and progressive cushion.
7. Were the “ME” out of the limits, you should choose a cushioning with a different capacity of efficiency measurement.
8. Varying the cushion length you can change the “ME”; however, at each variation of the cushion length you must remember to calculate the propelling energy of the point 3 again.
   Check whether the cushioning is condition to dissipate the energy generated by work frequency per hour into heat:

   $W_4 = W_3 \cdot X$ (Nm/h)
9. Were the cushioning not in condition to dissipate it, you should choose among:
   a) use of a cushioning with a higher capacity per hour taking care of calculating the point 3 again (were the cushion length different);
   b) Use of a system with recirculation or external air/oil tank, both characterised by a higher capacity per hour;
   c) cooling of the cushioning by air blow or another refrigerating fluid.

Factors

Symbol

W1	= Kinetic energy per cycle	(Nm)
W2	= Motion energy per cycle	(Nm)
W3	= Total energy per cycle	(Nm)
W4	= Total energy per hour	(Nm/h)
F	= Motion force	(N)
x	= Number of cycles per hour	(1/h)
s	= Cushioning length	(m)
v	= Mass speed	(m/s)
m	= Cushioned mass	(Kg)
ME	= Efficiency measurement	(Kg)

The shock absorbers are selected according to their energy absorbing capacity.
The capacity values identify both the mass that can be cushioned and the energy that can be absorbed per cycle and hour.
So the required performances must be compared with the table of the cushionings capacities to make sure that the energy can be absorbed, converted into heat and dissipated in the atmosphere.

Energy

The factors that must be considered at the moment of selection are:

- Kinetic energy (W_1): it is the energy generated by the weight and the velocity of the mass that must be cushioned.
- Motion energy (W_2): it is the work, produced by the motion force acting on the mass that must be cushioned, multiplied by the cushion length.
- Total energy per cycle (W_3): it is the sum of the 2 preceding values and is the energy that must be dissipated every cycle.
- Total energy per hour (W_4): it is the product of the total energy per cycle by the number of cycles per hour; so it is the energy the cushioning must dissipate every hour.
- Efficiency measurement (**ME**): it is the mass (theoretical), which, without motion force and at the same velocity of the real mass, would have a kinetic energy equal to the total energy per cycle (W_3) of the real application. It is not the mass that must be cushioned; it doesn’t indicate the power supported by the cushioning.

Code key

Type	Shock absorber thread	Shock absorber stroke
DR	**12**	**10**
DR	10x1 ÷ 25x1,5	8 mm ÷ 40 mm
DRF		

How to order

Type	Shock absorber thread	Shock absorber stroke
DR	**12**	**10**

Standard materials

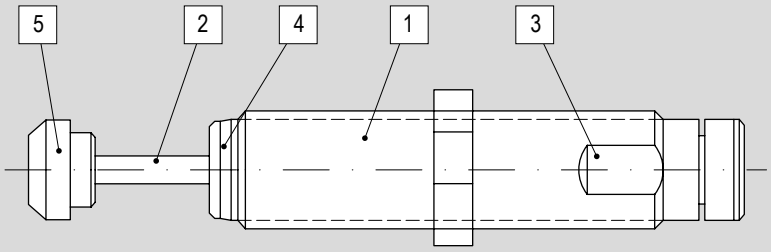

Position	Description	Materale
1	Body	Burnished steel
2	Rod	Stainless Steel
3	Spring	Steel
4	Seals	NBR - Polyurethane (PU) - Elastomer
5	Absorber	Polymer

Adjustable shock absorbers
Series DR - DRF

Main features

8 ÷ 10
Strokes mm

DR
Type



12,5 ÷ 40
Strokes mm

DRF
Type



Technical data

Type	DR	DRF
Description	Adjustable hydraulic shock absorbers without mechanical stopper	Adjustable hydraulic shock absorbers with mechanical stopper included
Temperature range	+5°C ÷ +70°C	+12°C ÷ +90°C
Strokes	8 - 10 mm	12,5 - 19,1 - 25,4 - 40 mm
Maximum impact speed	4 m/s	

Dimensions

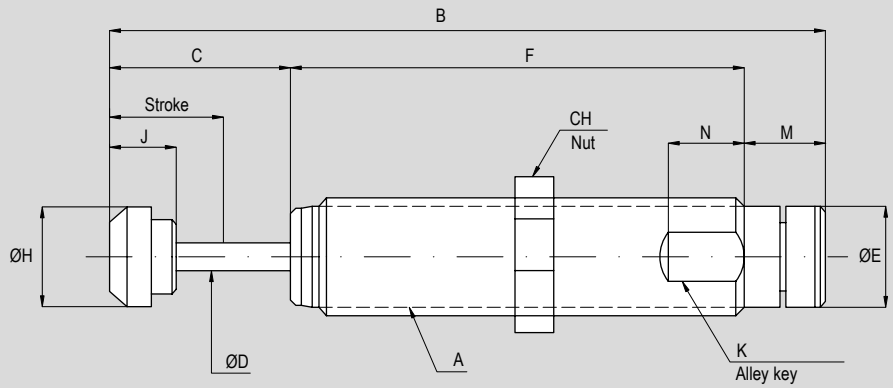

Code	Item	Stroke	A (thread)	B	C	ØD	ØE	F	N	ØH	K	J	M	CH	Maximum absorbing capacity (Nm)		Efficiency measurement		Weight (g)
															Per cycle (W_3)	Per hour (W_4)	min. (Kg.)	max. (Kg.)	
041801	DR1008	8	10x1	66,5	14,5	2,5	8,8	40	-	6	-	6,5	12	13	1,8	3600	0,2	10	26
041802	DR1210	10	12x1	84	18	3,5	10,8	60	-	8	-	8	6	14	4	6000	0,9	57	43
041803	DRF1412	12,5	14x1,5	87	17,5	8	12	61	12	12	12	10	8,5	17	17	35000	0,6	90	60
041804	DRF2019	19,1	20x1,5	117,9	30	4,8	16,8	74,7	12,7	16,8	18	11	13,2	24	25	45000	2,3	226	130
041805	DRF2525	25,4	25x1,5	142,6	36,3	6,3	22,4	89,7	12,7	22,9	23	11	16,6	30	88	68000	9	1360	310
041806	DRF2540	40	25x1,5	189	51,1	6,3	22,4	121,3	12,7	22,9	23	11	16,6	30	100	90000	14	2040	400

Notes

MAGNETIC
Reed Switches and Brackets



Find out our
key products

- **Solution for most applications**
- **Easy and intuitive choice**
- **Excellent value for money**
- **Wide availability**
- **Fast delivery**

Features and certifications

The magnetic reed switches are magnetic sensors responding to the presence of a magnetic field. When mounted on a cylinder tube they detect the presence of the magnetic field generated by the magnet set on the piston. This information is used to signal electrical circuits as required.
In this chapter is also possible to find cables with M8 connector and brackets for mountings of the magnetic reed switches on the cylinders.
The magnetic reed switches are supplied conforming to CE and UKCA standards (series MK supplied according to 2014/34/EU ATEX Directive), the cables are marked cURus, while all products are supplied as standard in compliance with Reach and RoHS Directives.

Series ASV

from page 1.110.10



Series of magnetic reed switches for cylinders, for direct mounting in the suitable housings ("T" grooves) or through brackets.

Series ASC

from page 1.110.30



Series of magnetic reed switches for cylinders, for direct mounting in the suitable housings ("C" grooves).

Series ASH

from page 1.111.1



Series of high-temperatures magnetic reed switches for cylinders, for mounting through brackets.

Series MK

from page 1.113.1



Series of magnetic reed switches for cylinders, according to 2014/34/EU ATEX Directive, for direct mounting in the suitable housings ("T" grooves) or through brackets.

Series CAV

from page 1.115.1



Series of calbles with M8 connector, for magnetic reed switch with matching outlet.

Series AFM - AFR - AS..

from page 1.120.1



Series of brackets which allow the mounting on cylinders of the magnetic reed switches type "T".

Matching switches / cylinders

Magnetic switches	Matching with magnetic cylinders																	See page
	MSM MDM MDMA MDMX MDMAX	AMA BMA	AMT BMT AMX	CM	RDM RDMA RDMX RDMAX RXD	CI CIS CS CD	CIX CIXS	DUM	BSM BDM CLS CLD	CLB	GEDB GEDS GPB GPS	GSB GSS	S Ø18	S Ø25÷63	CRTH CRTHD CRTF	ARTM..C ARC.. ARP..	PAB PAC PPB PPD PPE PPC	
ASV..	■	● ■	■	■	■	●	■	–	■	●	–	●	■	●	■	–	–	1.110.10
ASC..	–	●	–	–	–	–	–	●	–	–	●	–	–	–	–	●	●	1.110.30
ASH..	–	■	■	■	–	–	–	–	–	–	–	–	–	–	–	–	–	1.111.1
MK500A	■	●	■	■	■	●	■	–	■	●	–	–	–	–	–	–	–	1.113.1
MK502A	■	●	■	■	■	●	■	–	■	●	–	–	–	–	–	–	–	

Key
● direct mounting allowed (for mounting instruction see page 1.110.6)
■ mounting through bracket allowed (for switches / brackets matching please see the table below, for cylinders / brackets matching please see the table at page 1.110.4)
– not allowed matching

Matching switches / brackets and accessories

Magnetic switches	Matching with accessories									See page
	AFM..	AFR..	AS101 ÷ AS106 AS110	AS108	AS109	AS112 ÷ AS121	CAV20M8	CAV50M8	CAV1KM8	
ASV1C525	●	●	●	●	●	–	–	–	–	1.110.10
ASV1C550	●	●	●	●	●	–	–	–	–	
ASV1C51K	●	●	●	●	●	–	–	–	–	
ASV1C5M8	●	●	●	●	●	–	●	●	●	
ASV4D225	●	●	●	●	●	–	-	-	-	1.110.11
ASV4D2M8	●	●	●	●	●	–	●	●	●	
ASV7N225	●	●	●	●	●	–	-	-	-	1.110.12
ASV7N2M8	●	●	●	●	●	–	●	●	●	
ASV7M2M8	●	●	●	●	●	–	●	●	●	1.110.13
ASV1H525	●	●	●	●	●	–	–	–	–	
ASC1C525	–	–	–	–	–	–	–	–	–	1.110.30
ASC7N2M8	–	–	–	–	–	–	●	●	●	
ASC7M2M8	–	–	–	–	–	–	●	●	●	1.110.31
ASH6C550	–	–	–	–	–	●	–	–	–	1.111.1
MK500A	●	●	●	●	●	–	–	–	–	1.113.1
MK502A	●	●	●	●	●	–	–	–	–	

Key
● allowed matching; – not allowed matching

Matching brackets / cylinders

Backets		Matchig with cylinders														
Item	Code	MSM MDM Ø 8	MSM MDM Ø 10	MSM MDM Ø 12	MSM MDM MDMA MDMX Ø 16	MSM MDM MDMA MDMX MDMAX Ø 20	MSM MDM MDMA MDMX MDMAX Ø 25	MSM MDM MDMA RDM RDMX RDMAX Ø 32÷63	CIX CIXS Ø 10÷63	AMA* BMA* Ø 32÷40	AMA* BMA* Ø 50÷63	AMA* BMA* Ø 80	AMA* BMA* Ø 100	AMA* BMA* Ø 125	AMT BMT CM Ø 25÷40	AMT BMT CM Ø 50÷63
AFM8	072901	●	-	-	-	-	-	-	-	-	-	-	-	-	-	-
AFM10	072902	-	●	-	-	-	-	-	-	-	-	-	-	-	-	-
AFM12	072903	-	-	●	-	-	-	-	-	-	-	-	-	-	-	-
AFM16	072904	-	-	-	●	-	-	-	-	-	-	-	-	-	-	-
AFM20	072905	-	-	-	-	●	-	-	-	-	-	-	-	-	-	-
AFM25	072906	-	-	-	-	-	●	-	-	-	-	-	-	-	-	-
AFR1063	072907	-	-	-	-	-	-	●	●	-	-	-	-	-	-	-
AS101	072908	-	-	-	-	-	-	-	-	●	-	-	-	-	-	-
AS102	072909	-	-	-	-	-	-	-	-	-	●	-	-	-	-	-
AS103	072910	-	-	-	-	-	-	-	-	-	-	●	●	-	-	-
AS104	072911	-	-	-	-	-	-	-	-	-	-	-	-	●	-	-
AS105	072912	-	-	-	-	-	-	-	-	-	-	-	-	-	●	-
AS106	072913	-	-	-	-	-	-	-	-	-	-	-	-	-	-	●
AS108	072915	-	-	-	-	-	-	-	-	-	-	-	-	-	-	-
AS109	072916	-	-	-	-	-	-	-	-	-	-	-	-	-	-	-
AS110	072917	-	-	-	-	-	-	-	-	-	-	-	-	-	-	-
AS112	077838	-	-	-	-	-	-	-	-	-	-	●	-	-	-	-
AS113	077651	-	-	-	-	-	-	-	-	-	●	-	-	-	-	-
AS114	074055	-	-	-	-	-	-	-	-	●	-	-	-	-	-	-
AS115	077839	-	-	-	-	-	-	-	-	-	-	-	●	-	-	-
AS116	074007	-	-	-	-	-	-	-	-	-	-	-	-	●	-	-
AS117	074041	-	-	-	-	-	-	-	-	-	-	-	-	-	●	-
AS118	074043	-	-	-	-	-	-	-	-	-	-	-	-	-	-	●
AS119	074087	-	-	-	-	-	-	-	-	-	-	-	-	-	-	-
AS120	074155	-	-	-	-	-	-	-	-	-	-	-	-	-	-	-
AS121	074169	-	-	-	-	-	-	-	-	-	-	-	-	-	-	-

Key
● allowed matching; - not allowed matching
*Magnetic reed switches can also fit in grooves; **In larger bores the magnetic reed switches fit in grooves.

Matchig with cylinders

AMT BMT CM Ø 80÷100	AMT BMT CM Ø 125	AMT BMT CM Ø 160÷200	AMT BMT Ø 250÷320	AMX Ø 32÷40	AMX Ø 50÷63	AMX Ø 80÷100	AMX Ø 125	AMX Ø 160÷200	BSM BDM Ø 12÷100	CLS CLD Ø 125	CLS CLD Ø 160	CLS CLD Ø 200	CLD Ø 250	S Ø 18**	CRTH CRTHD CRTF Ø 40	CRTH CRTHD CRTF Ø 63	CRTH CRTHD CRTF Ø 80
-	-	-	-	-	-	-	-	-	-	-	-	-	-	-	-	-	-
-	-	-	-	-	-	-	-	-	-	-	-	-	-	-	-	-	-
-	-	-	-	-	-	-	-	-	-	-	-	-	-	-	-	-	-
-	-	-	-	-	-	-	-	-	-	-	-	-	-	-	-	-	-
-	-	-	-	-	-	-	-	-	-	-	-	-	-	-	-	-	-
-	-	-	-	-	-	-	-	-	-	-	-	-	-	-	-	-	-
-	-	-	-	-	-	-	-	-	-	-	-	-	-	-	-	-	-
-	-	-	-	-	-	●	-	-	-	●	-	-	-	-	●	-	-
-	●	-	-	-	-	-	●	-	-	-	●	-	-	-	-	●	-
-	-	●	-	-	-	-	-	●	-	-	-	●	-	-	-	-	●
-	-	-	-	-	-	-	-	-	-	-	-	-	●	-	-	-	-
-	-	-	-	●	-	-	-	-	-	-	-	-	-	-	-	-	-
●	-	-	-	-	●	-	-	-	-	-	-	-	-	-	-	-	-
-	-	-	-	-	-	-	-	-	●	-	-	-	-	-	-	-	-
-	-	-	-	-	-	-	-	-	-	-	-	-	-	●	-	-	-
-	-	-	●	-	-	-	-	-	-	-	-	-	-	-	-	-	-
-	-	-	-	-	-	-	-	-	-	-	-	-	-	-	-	-	-
-	-	-	-	-	-	-	-	-	-	-	-	-	-	-	-	-	-
-	-	-	-	-	-	-	-	-	-	-	-	-	-	-	-	-	-
-	-	-	-	-	-	-	-	-	-	-	-	-	-	-	-	-	-
-	-	-	-	●	-	-	-	-	-	-	-	-	-	-	-	-	-
-	-	-	-	-	●	-	-	-	-	-	-	-	-	-	-	-	-
●	-	-	-	-	-	●	-	-	-	-	-	-	-	-	-	-	-
-	●	-	-	-	-	-	●	-	-	-	-	-	-	-	-	-	-
-	-	●	-	-	-	-	-	●	-	-	-	-	-	-	-	-	-

Installation of ASV type magnetic reed switches in grooves or brackets

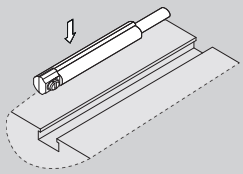
fig.1

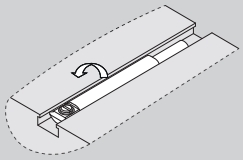
fig.2

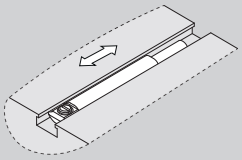
fig.3

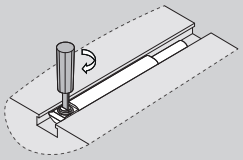
fig.4

To install ASV type magnetic reed swtches in their grooves or brackets, position the sensor perpendicularly to the housing, as shown in **fig.1,** and insert it into the housing with a light pressure. Then, rotate the switch 90° counterclockwise to position it inside the housing, as shown in **fig.2**.

Now slide the magnetic switch up to the desired position (**fig.3**). To identify the correct position, keep in mind that the sensig point may change according with the model; therefore, refer to the single product datasheets on the following pages.

Once the switch is placed in the desired position, secure it by tightening (max torque 0,2 Nm) the mounting screw clockwise with a screwdriver (**fig.4**).

To replace or remove the magnetic swtich, follow the steps shown above in the reverse order (from **fig.4** to **fig.1**): using a screwdriver loosen the mounting screw (turning counterclockwise), then rotate the switch 90° clockwise in the housing, and remove it from the groove or bracket.

Installation of ASC type magnetic reed switches in grooves

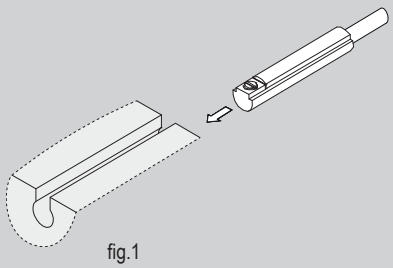
fig.1

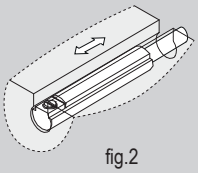
fig.2

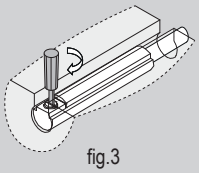
fig.3

To install the ASC type magnetic reed switches in their grooves, position the switch horizontally to the housing, as shown in **fig.1**, then insert it into the housing with a light pressure.

Now slide the magnetic switch up to the desired position (**fig.2**). To identify the correct position, keep in mind that the sensig point may change according with the model; therefore, refer to the single product datasheets on the following pages.

Once the switch is placed in the desired position, secure it by tightening (max torque 0,2 Nm) the mounting screw clockwise with a screwdriver (**fig.3**).

To replace or remove the magnetic swtich, follow the steps shown above in the reverse order (from **fig.3** to **fig.1**): using a screwdriver loosen the mounting screw (turning counterclockwise), and remove the switch from the groove.

Installation of ASV type magnetic reed switches in grooves or brackets

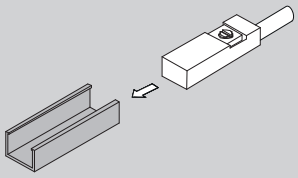
fig.1

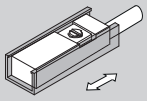
fig.2

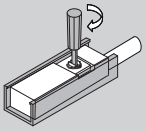
fig.3

To install the MK type or the ASV type magnetic reed switches in their brackets, position the switch horizontally to the housing, as shown in **fig.1**, then insert it into the housing with a light pressure.

Now slide the magnetic switch up to the desired position (**fig.2**). To identify the correct position, keep in mind that the sensig point may change according with the model; therefore, refer to the single product datasheets on the following pages.

Once the switch is placed in the desired position, secure it by tightening (max torque 0,2 Nm) the mounting screw clockwise with a screwdriver (**fig.3**).

To replace or remove the magnetic swtich, follow the steps shown above in the reverse order (from **fig.3** to **fig.1**): using a screwdriver loosen the mounting screw (turning counterclockwise), and remove the switch from the backet.

Symbol

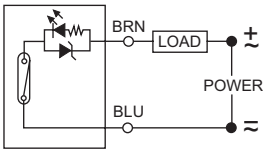

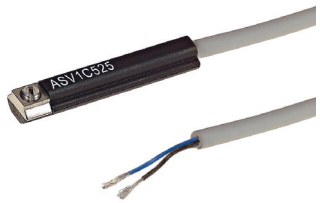

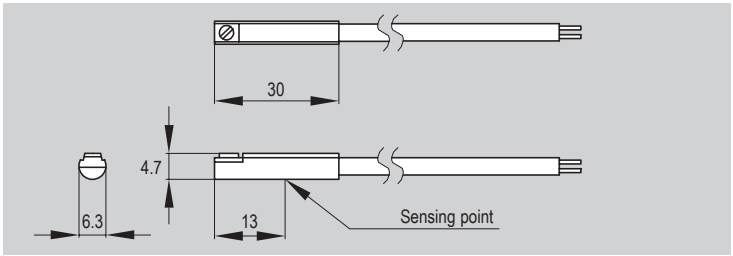

Main features

Code	Item	Description
070946	ASV1C525	Magnetic reed switches for direct mounting in T groove (or through bracket). Reed 2 poles normally open circuit, with flying lead.
071863	ASV1C550	
071864	ASV1C51K	

Technical data

Type	ASV1C525	ASV1C550	ASV1C51K
Circuit	Reed		
Poles	2 poles		
Switching	SPST - Normally Open		
Voltage	5÷240 V DC / AC (50-60 Hz)		
Switching current	100 mA max		
Contact rating	10 W		
Voltage drop	3,5 V max		
Operating frequency	200 Hz		
LED	Red		
Electrical connection	Flying lead		
Cable	Gray polyurethane, Ø 3,3 mm		
Cable length	2,5 m	5 m	10 m
Temperature range	-10°C ÷ +70°C		
Protection class	IEC 60529 IP67		

Symbol

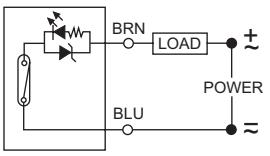



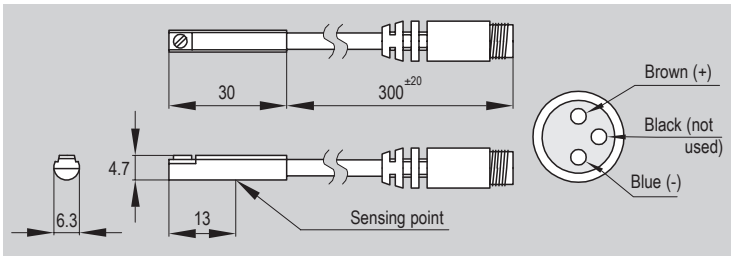

Main features

Code	Item	Description
071189	ASV1C5M8	Magnetic reed switches for direct mounting in T groove (or through bracket). Reed 2 poles normally open circuit, with M8 connector.

Technical data

Type	ASV1C5M8
Circuit	Reed
Poles	2 poles
Switching	SPST - Normally Open
Voltage	5÷240 V DC / AC (50-60 Hz)
Switching current	100 mA max
Contact rating	10 W
Voltage drop	3,5 V max
Operating frequency	200 Hz
LED	Red
Electrical connection	M8 male connector
Cable	Gray polyurethane, Ø 3,3 mm
Cable length	0,3 m
Temperature range	-10°C ÷ +70°C
Protection class	IEC 60529 IP67

Symbol

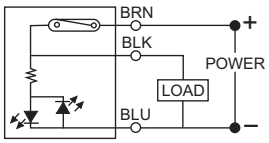

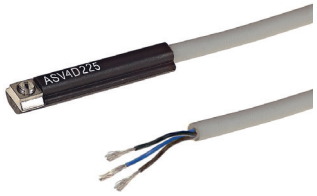

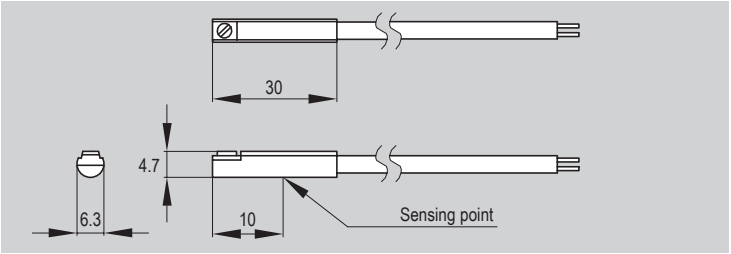

Main features

Code	Item	Description
073639	ASV4D225	Magnetic reed switches for direct mounting in T groove (or through bracket). Reed PNP 3 poles normally open circuit, with flying lead.

Technical data

Type	ASV4D225
Circuit	Reed, PNP
Poles	3 poles
Switching	SPST - Normally Open
Voltage	10÷30 V DC
Switching current	500 mA max
Contact rating	10 W max
Voltage drop	0,1 V @ 100 mA max
Operating frequency	200 Hz
LED	Yellow
Electrical connection	Flying lead
Cable	Gray polyurethane, Ø 3,3 mm
Cable length	2,5 m
Temperature range	-10°C ÷ +70°C
Protection class	IEC 60529 IP67

Symbol

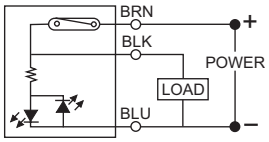



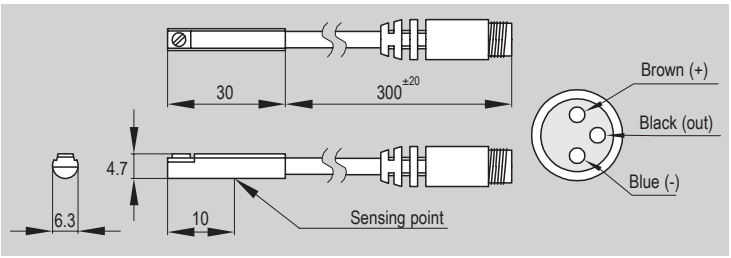

Main features

Code	Item	Description
070246	ASV4D2M8	Magnetic reed switches for direct mounting in T groove (or through bracket). Reed PNP 3 poles normally open circuit, with M8 connector.

Technical data

Type	ASV4D2M8
Circuit	Reed, PNP
Poles	3 poles
Switching	SPST - Normally Open
Voltage	10÷30 V DC
Switching current	500 mA max
Contact rating	10 W max
Voltage drop	0,1 V @ 100 mA max
Operating frequency	200 Hz
LED	Yellow
Electrical connection	M8 male connector
Cable	Black polyurethane, Ø 3,3 mm
Cable length	0,3 m
Temperature range	-10°C ÷ +70°C
Protection class	IEC 60529 IP67

Symbol

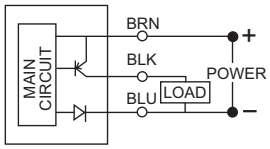

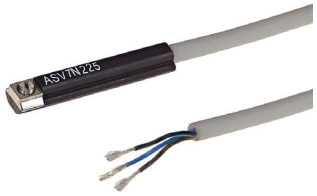

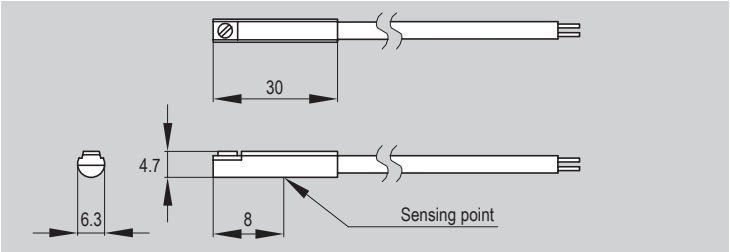

Main features

Code	Item	Description
074900	ASV7N225	Magnetic reed switches for direct mounting in T groove (or through bracket). Reed-Hall PNP 3 poles normally open circuit, with flying lead.

Technical data

Type	ASV7N225
Circuit	Reed-Hall, PNP
Poles	3 poles
Switching	Normally Open solid state output
Voltage	10÷30 V DC
Switching current	200 mA max
Contact rating	6 W max
Voltage drop	1,5 V max
Operating frequency	1000 Hz
LED	Yellow
Electrical connection	Flying lead
Cable	Gray polyurethane, Ø 3,3 mm
Cable length	2,5 m
Temperature range	-10°C ÷ +70°C
Protection class	IEC 60529 IP67

Symbol

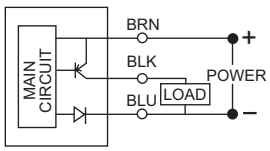



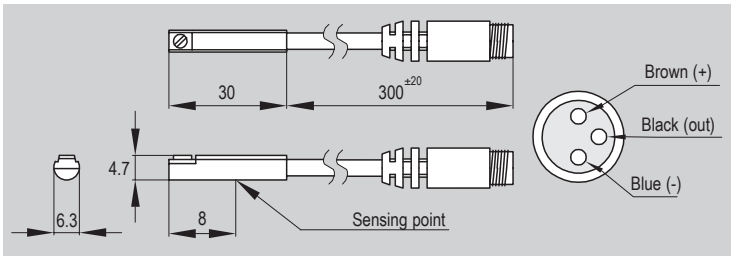

Main features

Code	Item	Description
070247	ASV7N2M8	Magnetic reed switches for direct mounting in T groove (or through bracket). Reed-Hall PNP 3 poles normally open circuit (solid state output), with M8 connector.

Technical data

Type	ASV7N2M8
Circuit	Reed-Hall, PNP
Poles	3 poles
Switching	Normally Open solid state output
Voltage	10÷30 V DC
Switching current	200 mA max
Contact rating	6 W max
Voltage drop	1,5 V max
Operating frequency	1000 Hz
LED	Yellow
Electrical connection	M8 male connector
Cable	Gray polyurethane, Ø 3,3 mm
Cable length	0,3 m
Temperature range	-10°C ÷ +70°C
Protection class	IEC 60529 IP67

Magnetic Reed Switches and Brackets

Magnetic reed switches series ASV

Symbol

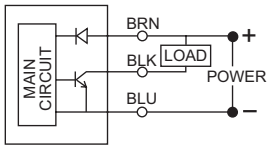



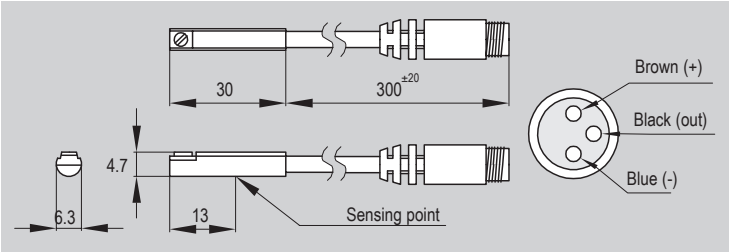

Main features

Code	Item	Description
070372	ASV7M2M8	Magnetic reed switches for direct mounting in T groove (or through bracket). Reed-Hall NPN 3 poles normally open circuit (solid state output), with M8 connector.

Technical data

Type	ASV7M2M8
Circuit	Reed-Hall, NPN
Poles	3 poles
Switching	Normally Open solid state output
Voltage	10÷30 V DC
Switching current	200 mA max
Contact rating	6 W max
Voltage drop	1,5 V max
Operating frequency	1000 Hz
LED	Red
Electrical connection	M8 male connector
Cable	Gray polyurethane, Ø 3,3 mm
Cable length	0,3 m
Temperature range	-10°C ÷ +70°C
Protection class	IEC 60529 IP67

Symbol

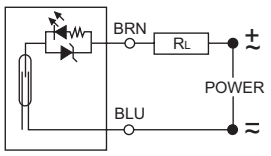

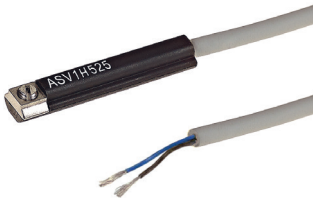

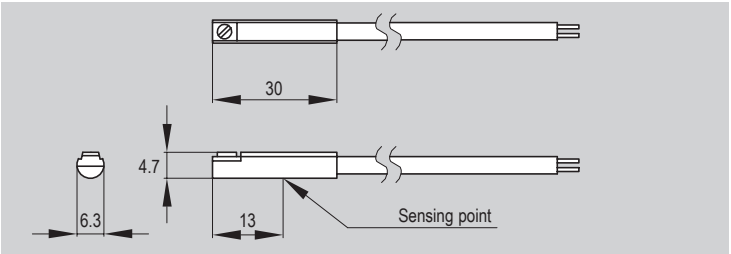

Main features

Code	Item	Description
072918	ASV1H525	Magnetic reed switches for direct mounting in T groove (or through bracket). Reed 2 poles normally closed circuit, with flying lead.

Technical data

Type	ASV1H525
Circuit	Reed
Poles	2 poles
Switching	Normally Closed
Voltage	5÷120 V DC / AC (50-60 Hz)
Switching current	100 mA max
Contact rating	10 W
Voltage drop	3,5 V max
Operating frequency	200 Hz
LED	Red
Electrical connection	Flying lead
Cable	Gray polyurethane, Ø 3,3 mm
Cable length	2,5 m
Temperature range	-10°C ÷ +70°C
Protection class	IEC 60529 IP67

Symbol

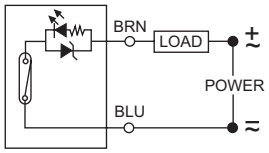

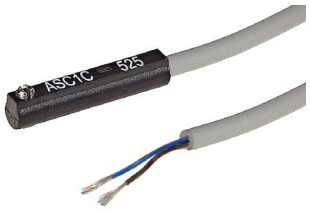

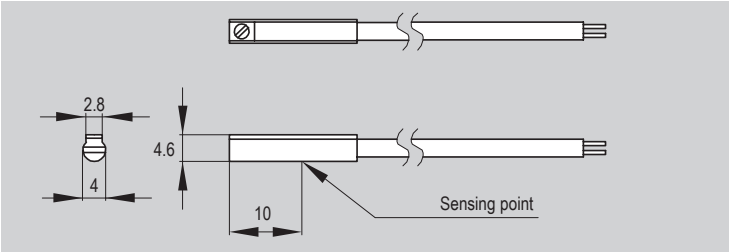

Main features

Code	Item	Description
070248	ASC1C525	Magnetic reed switches for direct mounting in C groove. Reed 2 poles normally open circuit (SPST), with flying lead.

Technical data

Type	ASC1C525
Circuit	Reed
Poles	2 poles
Switching	Normally Open - SPST
Voltage	5÷120 V DC / AC (50-60 Hz)
Switching current	100 mA max
Contact rating	6 W max
Voltage drop	3,5 V max
LED	Red
Electrical connection	Flying lead
Cable	Gray polyurethane, Ø 2,8 mm
Cable length	2,5 m
Temperature range	-10°C ÷ +70°C
Protection class	IEC 60529 IP67
Electical protection	-

Symbol

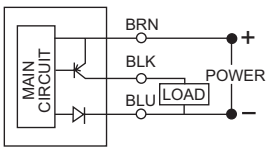

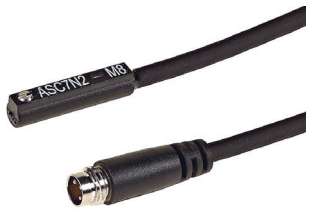

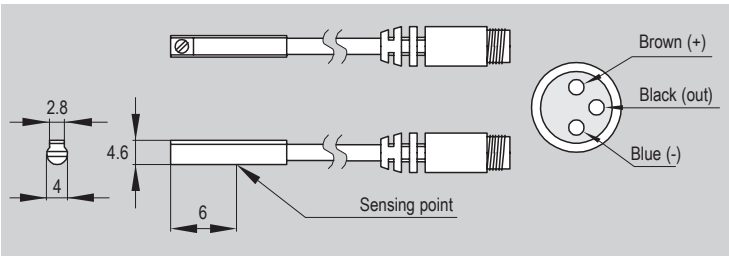

Main features

Code	Item	Description
070249	ASC7N2M8	Magnetic reed switches for direct mounting in C groove. Reed-Hall PNP 3 poles normally open circuit (solid state output), with M8 connector.

Technical data

Type	ASC7N2M8
Circuit	Reed-Hall, PNP
Poles	3 poles
Switching	Normally Open solid state output
Voltage	5÷28 V DC
Switching current	100 mA max
Contact rating	3 W max
Voltage drop	0,5 V max (50 mA)
LED	Green
Electrical connection	M8 male connector
Cable	Black PVC, Ø 2,8 mm
Cable length	0,3 m
Temperature range	-10°C ÷ +70°C
Protection class	IEC 60529 IP67
Electical protection	Reverse polarity - Sourge suppression

Magnetic Reed Switches and Brackets

Magnetic reed switches series ASC

Symbol

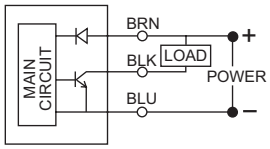



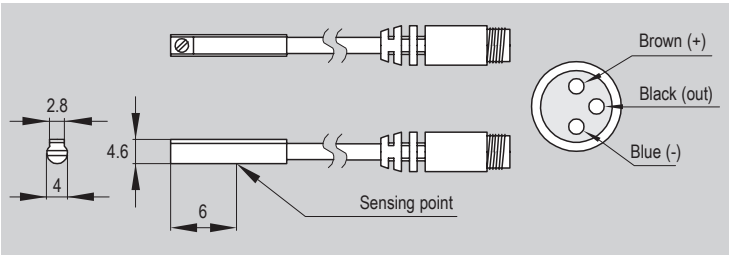

Main features

Code	Item	Description
070382	ASC7M2M8	Magnetic reed switches for direct mounting in C groove. Reed-Hall NPN 3 poles normally open circuit (solid state output), with M8 connector.

Technical data

Type	ASC7M2M8
Circuit	Reed-Hall, NPN
Poles	3 poles
Switching	Normally Open solid state output
Voltage	5÷28 V DC
Switching current	100 mA max
Contact rating	3 W max
Voltage drop	0,5 V max (50 mA)
LED	Red
Electrical connection	M8 male connector
Cable	Black PVC, Ø 2,8 mm
Cable length	0,3 m
Temperature range	-10°C ÷ +70°C
Protection class	IEC 60529 IP67
Electical protection	Reverse polarity - Sourge suppression

Magnetic Reed Switches and Brackets

High-temperatures magnetic reed switches series ASH

Symbol

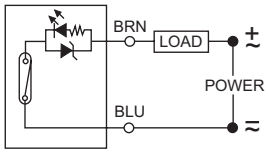

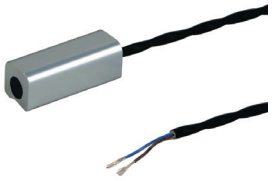

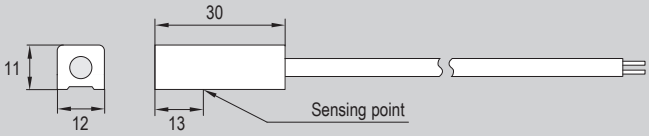

Main features

Code	Item	Description
074047	ASH6C550	High-temperatures magnetic reed switches for mounting through bracket. Reed 2 poles normally open circuit, with flying lead.

Note

To be mounted on the cylinder, high temperature switches series ASH require brackets type AS, see page 1.120.4

Technical data

Type	ASH6C550
Circuit	Reed
Poles	2 poles
Switching	Normally Open
Voltage	5 ÷ 240 V DC / AC (50-60 Hz)
Switching current	500 mA max
Contact rating	10 W
Voltage drop	0,5 V max
Electrical connection	Flying lead
Cable	Black PTFE, Ø 3 mm, 2C
Cable length	5 m
Temperature range	-10 °C ÷ +140°C
Protection class	IEC 60529 IP67

Symbol

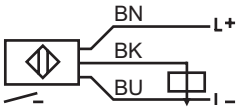

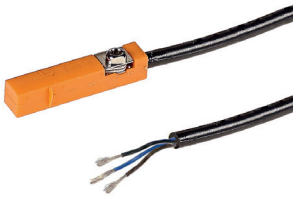

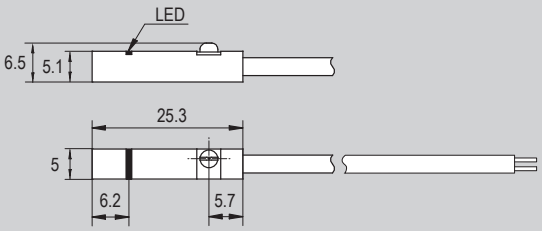

Main features

Code	Item	Description
071120	MK500A	Magnetic reed switches conforming to 2014/34/UE ATEX Directive, for direct mounting in T groove (or through bracket). PNP 3 poles circuit, with reverse polarity protection, short-circuit protection and overload-resistant, with flying lead.

II 3D Ex tc IIIC T125°C Dc X

For further information on the ATEX 2014/34/EU Directive, on classifications and protections, see from page III.1

Technical data

Type	MK500A
Electrical design	PNP
Operating voltage	10 ÷ 30 V DC
Current consumption	≤10 mA
Protection class	III
Power-on delay time	< 30 ms
Voltage drop	< 2,5 V
Current rating	100 mA
Switching frequency	10000 Hz
Magnetic sensitivity	2,8 mT
Travel speed	> 10 m/s
Hysteresis	< 1,5 mm
Repeatibility	< 0,2 mm
Temperature range	-25°C ÷ +60°C
Protection	IP65 / IP67
LED	Yellow
Cable	Black PVC, Ø 3,3 mm
Cable length	2 m
Weight	59,4 g

Symbol

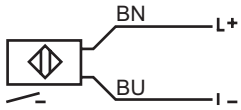

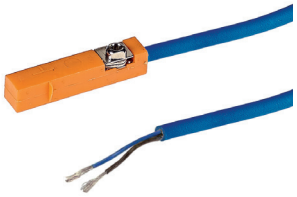

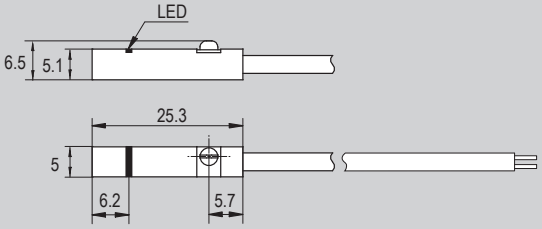

Main features

Code	Item	Description
071108	MK502A	Magnetic reed switches conforming to 2014/34/UE ATEX Directive, for direct mounting in T groove (or through bracket). 2 poles circuit, certified connection to intrinsically safe electrical circuits, with flying lead.

II 1G Ex ia IIC T4 Ga
II 1D Ex ia IIIC T135°C Da

For further information on the ATEX 2014/34/EU Directive, on classifications and protections, see from page III.1

Technical data

Type	MK502A
Electrical design	NAMUR
Operating voltage	8,2 V DC
Current consumption	≥ 2,2 mA
Protection class	III
Switching frequency	2000 Hz
Magnetic sensitivity	2 mT
Travel speed	> 10 m/s
Hysteresis	< 1 mm
Repeatibility	< 0,2 mm
Temperature range	-25°C ÷ +70°C
Protection	IP65 / IP67
LED	Yellow
Cable	Blue PVC, Ø 3,3 mm
Cable length	2 m
Weight	93,9 g

Compliance

c UL us

CAV

Type

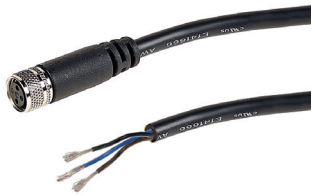

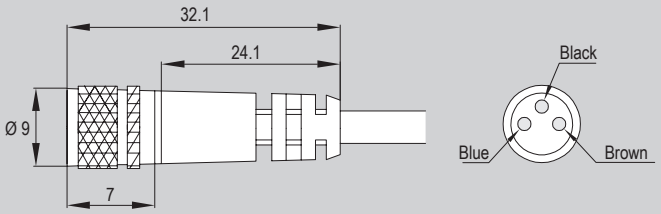

Main features

Code	Item	Description
070269	CAV20M8	Cable, 2 m lenght with M8 connector
070250	CAV50M8	Cable, 5 m lenght with M8 connector
070298	CAV1KM8	Cable, 10 m lenght with M8 connector

Technical data

Type	CAV20M8	CAV50M8	CAV1KM8
Cable	3 x 24 AWG / 0,22 mm2 flexible, spatter resistant, oil resistant		
Cable insulation	300 V		
Cable length	2 m	5 m	10 m
Electrical connection	M8 female connector		
Temperature range	-20°C ÷ +80°C		
Protection class	IEC 60529 IP67		

Materials

Description	Material
Cable	Black PVC
Connector body	Polypropylene
Connector contacts	Gilded brass
Connector nut	Nickel-plated brass

Magnetic Reed Switches and Brackets

Brackets for magnetic reed switches

Main features

8 ÷ 25
Bores Ø

AFM
Type



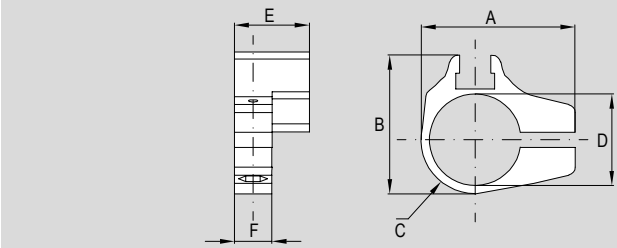

Technical data

Type	Description	Material
AFM..	Locking band for mounting magnetic reed switches type "T" on cylinders ISO 6432 in aluminium and Stainless Steel. Mounting screw included.	Polyamide, aluminium

Dimensions

For cylinder Ø mm	Code	Item	A	B	C	ØD	E	F
8	072901	AFM8	21,4	18,9	6,45	9,3	18	9
10	072902	AFM10	23,4	20,9	7,45	11,3	18	9
12	072903	AFM12	25,4	22,9	8,45	13,3	18	9
16	072904	AFM16	29,4	26,9	10,45	17,3	18	9
20	072905	AFM20	33,4	30,9	12,45	21,3	18	9
25	072906	AFM25	38,4	35,9	14,95	26,3	18	9

Main features

10 ÷ 63
Bores Ø

AFR
Type



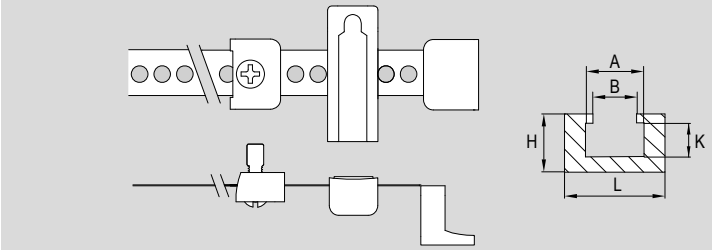

Technical data

Type	Description	Material
AFR..	Locking band for mounting magnetic reed switches type "T" on round cylinders in aluminium or Stainless Steel and on Stainless Steel compact cylinders ISO 21287. Universal metal band, screw and adapter included in kit.	Polyamide, aluminium

Dimensions

For cylinder Ø mm	Code	Item	A	B	H	K	L	Weight (g)
10 ÷ 63	072907	AFR1063	6,5	5,6	8	3,3	10	-

Main features

12 ÷ 100
Bores Ø

AS108
Type



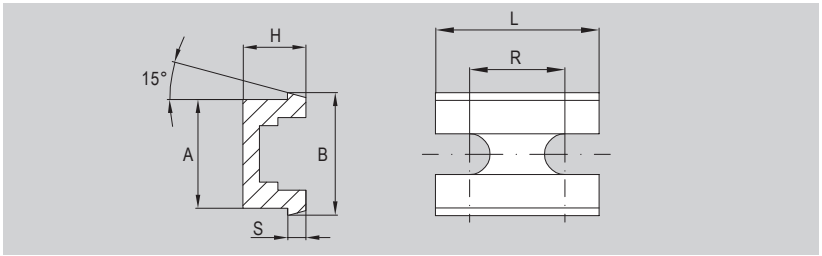

Technical data

Type	Description	Material
AS108	Bracket for mounting magnetic reed switches type "T" on short stroke cylinders.	Polyamide

Dimensions

For cylinder Ø mm	Code	Item	A	B	H	S	L	R
12 ÷ 100	072915	AS108	12	13,5	6,9	2	18	10,5

Main features

18
Bores Ø

AS109
Type



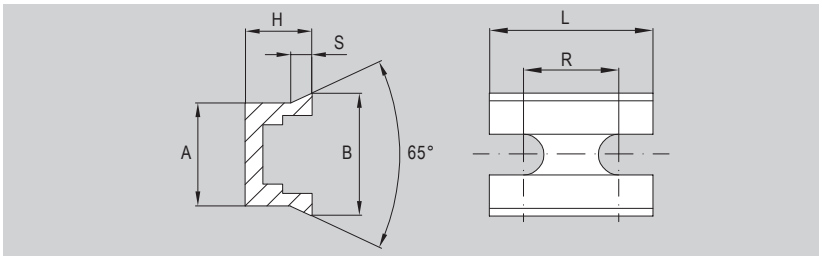

Technical data

Type	Description	Material
AS109	Bracket for mounting magnetic reed switches type "T" on rodless cylinders. In bores larger than Ø 18, the switches fit in grooves .	Polyamide

Dimensions

For cylinder Ø mm	Code	Item	A	B	H	S	L	R
18	072916	AS109	10,1	12,9	6,95	2,2	18	12,5

Main features

25 ÷ 320
Bores Ø

AS..
Type



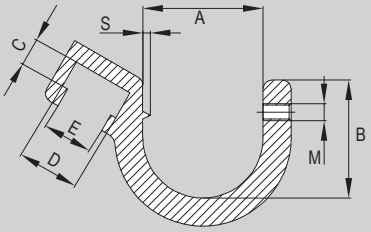

Technical data

Type	Description	Material
AS101 ÷ AS106; AS110	Bracket for mounting magnetic reed switches type "T" on cylinders ISO 15552 , cylinders CNOMO and short stroke cylinders with bores larger than Ø 100. Mounting screw included.	Aluminium

Dimensions

For cylinder type Ø mm					Code	Item	A	B	C	D	E	S	M
AMA BMA	AMT BMT CNOMO	CLS CLD	CRTH CRTHD CRTF	AMX									
32 ÷ 40	-	125	40	80 ÷ 100	072908	AS101	11,5	11	3,4	6,7	5,4	0,5	M4
50 ÷ 63	125	160	63	125	072909	AS102	14,5	14	3,4	6,7	5,4	0,5	M4
80 ÷ 100	160 ÷ 200	200	80	160 ÷ 200	072910	AS103	16,5	20	3,4	6,7	5,4	0,5	M4
125	-	250	-	-	072911	AS104	17,5	24	3,4	6,7	5,4	0,5	M4
-	25 ÷ 40	-	-	32 ÷ 40	072912	AS105	7	8	3,4	6,7	5,4	0,5	M4
-	50 ÷ 100	-	-	50 ÷ 63	072913	AS106	10	14	3,4	6,7	5,4	0,5	M4
-	250 ÷ 320	-	-	-	072917	AS110	24,5	21	3,4	6,7	5,4	0,5	M4

Main features

32 ÷ 100 **AS..**

Bores Ø Type



Type: **AS112 ÷ AS116**

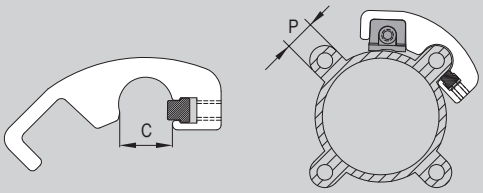

25 ÷ 200 **AS..**

Bores Ø Type



Type: **AS117 ÷ AS121**

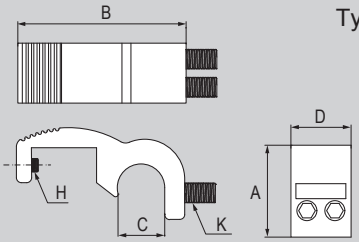

Technical data

Type	Description	Material
AS112 ÷ AS116	Bracket for mounting high temperatures magnetic reed switches on cylinders with profiled barrel.	Aluminium
AS117 ÷ AS121	Bracket for mounting high temperatures magnetic reed switches on cylinders with tube and tie-rods.	Aluminium

Dimensions

For cylinder type Ø mm			Code	Item	A	B	C	D	P	H	K
AMA BMA	AMT BMT CNOMO	AMX									
32 ÷ 40	-	-	077838	AS114	-	-	10,9	-	10,4	-	-
50 ÷ 63	-	-	077651	AS113	-	-	14,1	-	13,5	-	-
80	-	-	074055	AS112	-	-	15,45	-	15	-	-
100	-	-	077839	AS115	-	-	16,3	-	16	-	-
125	-	-	074007	AS116	-	-	19,8	-	18,7	-	-
-	25 ÷ 40	32 ÷ 40	074041	AS117	19,1	31,8	7,3	12	-	M2,6	M4x10
-	50 ÷ 63	50 ÷ 63	074043	AS118	18,4	33,7	9,3	12	-	M2,6	M4x10
-	80 ÷ 100	80 ÷ 100	074087	AS119	16,7	35,9	11,2	12	-	M2,6	M4x10
-	125	125	074155	AS120	24	38	13,5	12	-	M2,6	M4x10
-	160 ÷ 200	-	074169	AS121	24	40	15,5	12	-	M2,6	M4x10

Notes

VALVES

CHAPTER 2

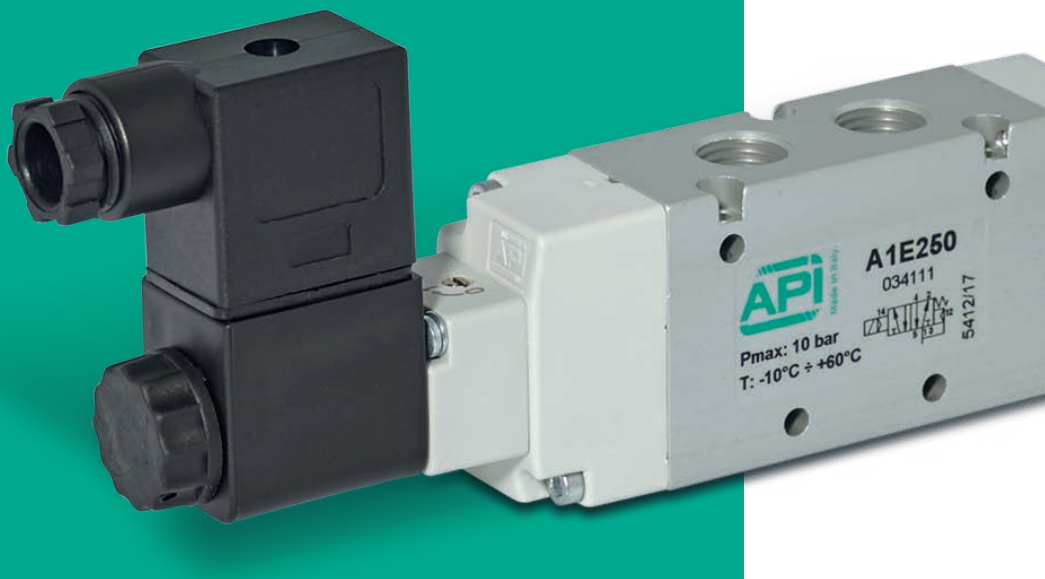

General informations

Valves technical features	page 2.1.1

Solenoid and air operated valves

Series		Type	Page
15 mm directly operated solenoid valves		AE05A, AE05C	2.5.1
Bases for 15 mm directly operated solenoid valves		ABAS05	2.6.1
22 mm directly operated solenoid valves		A1EM, A1E1..MD, A1E2..MD	2.10.1
Solenoid operated valves series A1		A1E1, A1K1, A1E2, A1K2, A1E4, A1K4	2.20.1
Air operated valves series A1		A1P1, A1P2, A1P4	2.30.1
Sub-bases for valves series A1		A1B1, A1B2	2.38.1
Plates for valves series A1		PSV	2.39.1
NAMUR valves solenoid operated		A1NE	2.44.1
NAMUR valves air operated		A1NP	2.50.1
Mounting plates for NAMUR valves		PSN	2.56.1
Valve terminals series A5		A5	2.70.1
Individual components for valve terminals series A5		A50, A5B, A5V	2.71.1
Valves ISO 5599/1 solenoid operated		ISO1E, ISO1K, ISO1EL, ISO1KL, IOS2E, ISO2K	2.90.1
Valves ISO 5599/1 air operated		ISO1P, ISO2P	2.100.1
Sub-bases for valves ISO 5599/1		SBA1S, SBA1M, SBA2S, SBA2M	2.107.1
Indirectly operated solenoid valves for water and steam		AEN22, AEV22, AEP22	2.120.1
Integrated circuits		AEF, APF, AEC, AEC	2.130.1
Solenoid operated valves, ATEX coils and connectors		Conforming to 2014/34/EU ATEX Directive in different classifications	2.320.1

Coils and connectors

Series		Type	Page
Coils		ASA12, ASA2, ASA33, ASA32, ASA34	2.315.1
Connectors		A192, A122, A182	2.318.1

Manual and mechanical operated valves

Series		Type	Page
Manual lever operated valves series A1		A1MA1..LL, A1MA1..LT, A1MA1..TT, A1MA2..LL, A1MA2..LT, A1MA2..TT	2.150.1
Manual button operated valves series A1		A1MA1..F, A1MA1.B, A1MA1..S	2.160.1
Foot operated valves		AVP	2.170.1
Microvalves Ø4		AM04	2.180.1
Manual operating devices		AP11, AP21, AP22, AP32, AP33, AP42, AP53	2.180.1
Mechanical operated valves		AC..04, AC..18, A1ME1..ANT, A1ME1..RLB, A1ME1..RLBR	2.200.1

Ancillary valves

page 2.250.1

Series		Type	Page
Slide valves		V26	2.251.1
Miniature valves from brass hexagonal bar		MVS	2.253.1
Miniature valves with cast body		MS	2.254.1
Ball valves full bore		VLSO	2.256.1
Quick exhaust valves		VSR, VSRM	2.260.1
Unidirectional valves		FF	2.263.1
Safety valves		VS	2.265.1

Actuators, valves and accessories

Series		Type	Page
Rotary actuators		AR..SE, AR..DE	2.400.1
Ball valves with rotary actuator		VSO..SE, VSO..DE, VSI..SE, VSI..DE	2.410.1
Limit switch box for actuators		SB200, SB200/Exia, SB500, SB700	2.425.1
Handwheel gearbox for actuators		GDB	2.425.1
Speed regulators for actuators and NAMUR valves		APNRSR, APNRDA, PNF	2.430.1

Notes

Flow of the valves

The quantity of compressed air that can flow through the valve depends on the size of the orifices and the type of course that must be followed within the valve itself by the fluid under pressure.

The flow of a valve is measured using suitable measuring circuits with the hypothesis that the upstream pressure is constant and that quantity of air required downstream is variable.

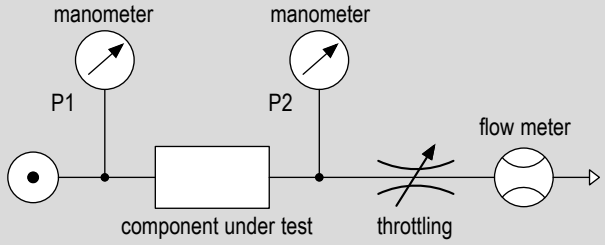

Flow characteristics

Curves known as “flow characteristic” are drawn, which indicate how the flow of the valve varies with the variation in downstream pressure, with a constant pressure supply. Once these characteristics are known, the flow of the valve is also known in all working conditions.

These curves show how the study model adopted for a valve - which consists of comparing it with a converging nozzle that releases a compressible gas with constant upstream pressure - is reasonably valid. Indeed, according to this model, the flow that passes through the nozzle depends on the following factors: the upstream pressure, the difference in pressure Δp and the valvular coefficient Kv.

The coefficient Kv summarizes the characteristics of the internal passages of the valve and is represented by the “number of litres of water that flow through the valve in one minute, in normal conditions (atmospheric pressure, 20 °C) in the presence of a fall in pressure Δp = 1 bar.

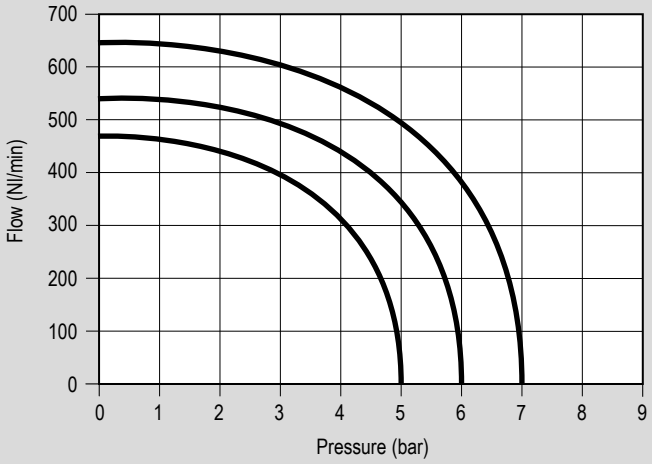

Formula for calculating the flow rate

The following formula constitutes the relationship between all the aforementioned elements:

$Q = 28{,}3\ Kv \sqrt{\Delta p\ (p1 - \Delta p)}$ where:

Q	=	flow [nl/min]
Kv	=	valvular coefficient of the H2O valve [nl/min]
Δp	=	p - p2 = fall in pressure between upstream and downstream [bar]
p1	=	absolute pressure upstream [bar]
28,3	=	conversion coefficient from water to air

So: the capacities calculated with the given formula differ little from those that can be obtained from the flow characteristic of the corresponding valve. Furthermore, it also provides confirmation, from the characteristic itself, of the limits of validity of the formula.
It is only valid for $\Delta p < \Omega$ p1; i.e. only up until the fall of pressure across the valve reaches a value equivalent to half the absolute supply pressure.

Nominal flow Qn

In this condition the air reaches maximum velocity (critical velocity Vc) and consequently maximum capacity Qmax.
For $\Delta p < \Omega$ p1, the pressure energy is converted into kinetic energy with an increase in velocity and consequently capacity. For $\Delta p > \Omega$ p1 the extra pressure energy is no longer converted into velocity energy, but dissipated in local turbulences in the form of heat.
All of this is confirmed by the flow characteristics.
From the same characteristics it is possible to discover that that the value of the flow with Δp = 1 bar is $\cong$ 2/3 Qmax.
The capacity corresponding to Δp = 1 bar is defined nominal flow (Qn).
In the case of a valve, a different flow characteristic exists for each absolute supply pressure, and thus corresponding values for Qmax. and Qn.
Falls in pressure of $\Delta p > 1$ bar are too economically onerous; for this reason it is advisable to limit the falls in pressure to Δp = 0,5 bar, by choosing a larger size valve.

In the catalogue reference is normally made to the nominal flow, but the flow characteristics and the valvular coefficient are also provided.
Let’s calculate, for example, the flow of a valve with Kv = 12 NL/min, P1 = 6 bar,

ΔP = 0,5 bar

$Q = 28{,}3 * 12 \sqrt{0{,}5\ (7 - 0{,}5} = 612$ [Nl/min]
Qn = 831 [Nl/min]
Q max = 1118 [Nl/min]

Notes

15 MM
directly operated solenoid valves



Find out our
key products

- **Solution for most applications**
- **Easy and intuitive choice**
- **Excellent value for money**
- **Wide availability**
- **Fast delivery**

Features and certifications

Series of 15 mm directly operated poppet valves for single or manifold bases, standard with coil and without connector (to be ordered separately).
Supplied as standard in compliance with Reach and RoHS directives

Type AE05C..

from page 2.5.20



15 mm directly operated solenoid valves, 3/2 normally closed.
Connectors to be ordered separately.

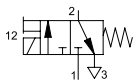

Type AE05A..

from page 2.5.20



15 mm directly operated solenoid valves, 3/2 normally open.
Connectors to be ordered separately.

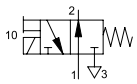

Code key

Series	Actuation	Size	Function	Voltage
A	**E**	**05**	**C**	**02400**
A	E = Electric	05 = 15 mm	C = 3/2 Normally closed	01200 = 12 V DC
			A = 3/2 Normally open	02400 = 24 V DC
				02450 = 12 V AC
				11050 = 110 V AC
				22050 = 230 V AC

How to order

Series	Actuation	Size	Function	Voltage
A	**E**	**05**	**C**	**02400**

Notes

Options in the same grid are alternative to each others.

Connectors to be ordered separately, see page 2.5.50

Standard materials

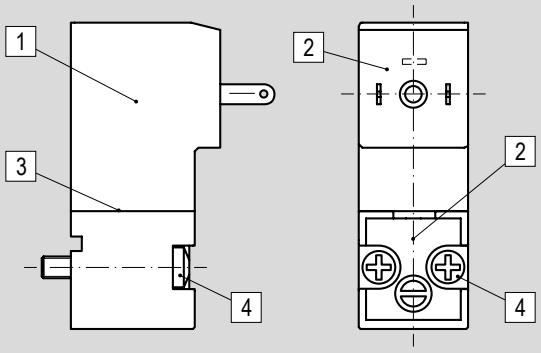

Position	Description	Material
1	Body	Acetal resin
2	Internal parts	Acetal resin and Stainless Steel
3	Seals	NBR
4	Screws	Zinc-plated steel

Accessories

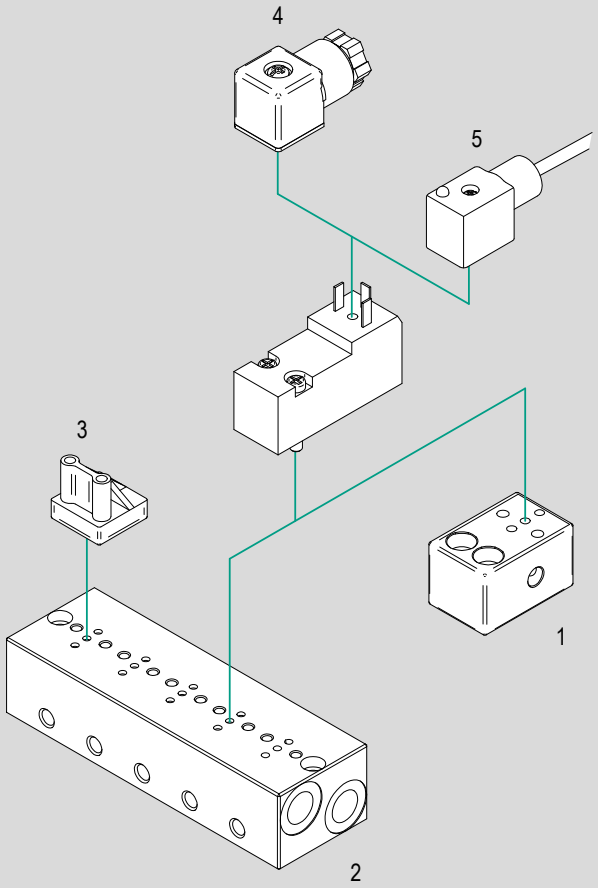

N.	Item	Description	Compliance	Matching		Code key page	Data sheet page
				AE05C	AE05A		
1	ABAS05S	Single base	-	●	●	2.5.50	2.6.20
2	ABAS05..	Manifold base	-	●	●		2.6.40
3	ABAS05T	Closing plate for manifold base	-	●	●		2.6.60
4	A19207..	Connector	-	●	●		2.318.10
5	A19207..K	Cabled connector	-	●	●		

Key
● matching accessory; – not matching accessory

Main features

Version	Code	Item	Symbol
3/2 Normally closed 12 V DC	034601	AE05C01200	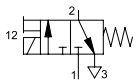
3/2 Normally closed 24 V DC	034602	AE05C02400	
3/2 Normally closed 24 V AC	034603	AE05C02450	
3/2 Normally closed 110 V AC	034604	AE05C11050	
3/2 Normally closed 230 V AC	034605	AE05C22050	
3/2 Normally open 12 V DC	034611	AE05A01200	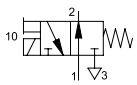
3/2 Normally open 24 V DC	034612	AE05A02400	
3/2 Normally open 24 V AC	034613	AE05A02450	
3/2 Normally open 110V AC	034614	AE05A11050	
3/2 Normally open 230 V AC	034615	AE05A22050	





Technical data

Version	3/2 Normally closed					3/2 Normally open				
Code	034601	034602	034603	034604	034605	034611	034612	034613	034614	034615
Item	AE05C01200	AE05C02400	AE05C02450	AE05C11050	AE05C22050	AE05A01200	AE05A02400	AE05A02450	AE05A11050	AE05A22050
Fluid	Filtered compressed air with or without lubrication.									
Pressure range	0 ÷ 10 bar									
Temperature range	-10°C ÷ +50°C									
Orifice Ø	1.1 mm									
Manual override	Two stable position, flat									
Flow at 6 bar with ΔP 1 bar	35 Nl/min.									
Response time	5 ms. (energising); 6 ms. (de-energizing)									
Duty cycle	ED 100%									
Voltage tolerance	±5%									
Electrical consumption	2 W									
Maximum frequency	30 Hz									
Electrical insulation	1000 V AC									
Class protection	IP 65*									
Mounting	In every position									
Fastening	2 screws (size M3)									
Weight	35 g.									

*With connector already mounted. Connectors to be ordered separately, see page 2.5.50

Standard dimensions

Type: **AE05C**
AE05A

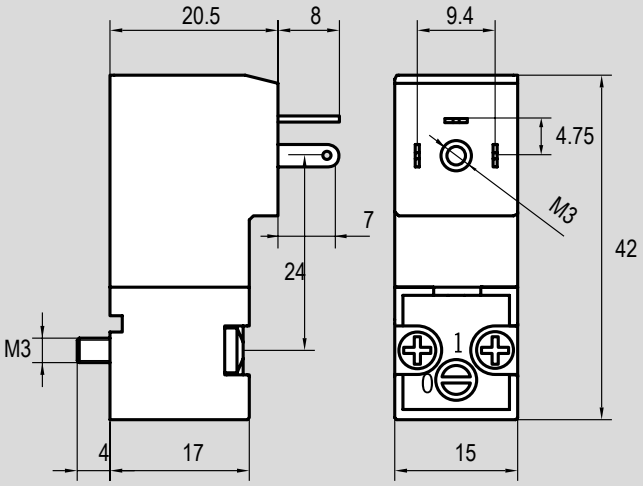

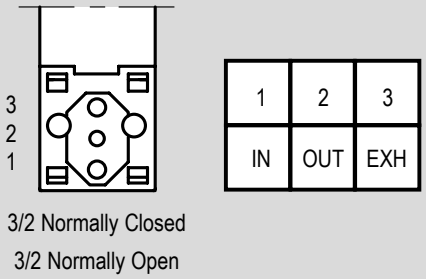

3/2 Normally Closed
3/2 Normally Open

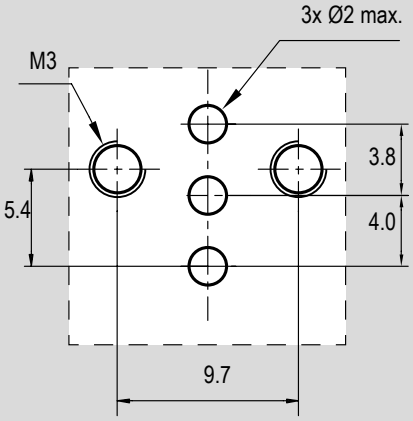

Sub-base

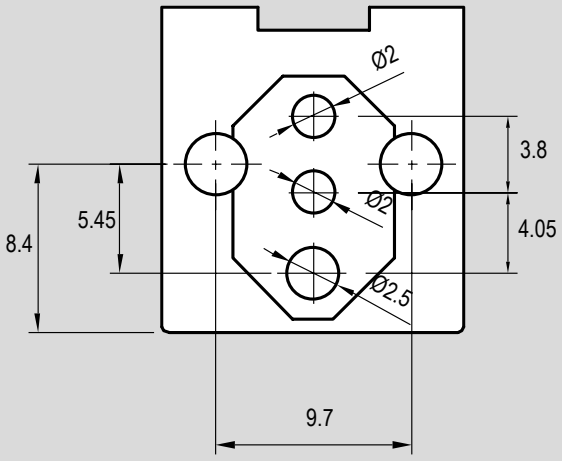

Namur

Version	Symbol	Code	Item
3/2 Normally closed 12 V DC	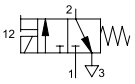	034601	AE05C01200
3/2 Normally closed 24 V DC		034602	AE05C02400
3/2 Normally closed 24 V AC		034603	AE05C02450
3/2 Normally closed 110 V AC		034604	AE05C11050
3/2 Normally closed 230 V AC		034605	AE05C22050
3/2 Normally open 12 V DC	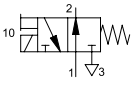	034611	AE05A01200
3/2 Normally open 24 V DC		034612	AE05A02400
3/2 Normally open 24 V AC		034613	AE05A02450
3/2 Normally open 110V AC		034614	AE05A11050
3/2 Normally open 230 V AC		034615	AE05A22050

Connectors A192..



Code	Item	Description
032117	A19207N	Black standard
033511	A19207NK	Black standard cabled
032201	A19207T1	LED+VDR transparent 24VAC-DC
032202	A19207T2	LED+VDR transparent 115VAC-DC
032203	A19207T3	LED+VDR transparent 230VAC-DC
033512	A19207N1K	LED+VDR black cabled 24VAC-DC
033513	A19207N2K	LED+VDR black cabled 115VAC-DC
033514	A19207N3K	LED+VDR black cabled 230VAC-DC

Single base ABAS05S



Positions	Code	Item	Matching
1	034621	ABAS05S	AE05

Manifold base ABAS05..



Positions	Code	Item	Matching
2	034625	ABAS050205	AE05
3	034626	ABAS050305	
4	034627	ABAS050405	
5	034628	ABAS050505	
6	034629	ABAS050605	
7	034630	ABAS050705	
8	034631	ABAS050805	
9	034632	ABAS050905	
10	034633	ABAS051005	

Closing plate ABAS05T



Positions	Code	Item	Matching
1	034622	ABAS05T	AE05

Notes

BASES FOR 15 MM

directly operated solenoid valves



Find out our **key products**

- **Solution for most applications**
- **Easy and intuitive choice**
- **Excellent value for money**
- **Wide availability**
- **Fast delivery**

Features and certifications

Series of bases for 15 mm directly operated solenoid valves available in version single and manifold.
Supplied as standard in compliance with Reach and RoHS directives.

Type ABAS05S

from page 2.6.20



Single bases for 15 mm directly operated solenoid valves.

Type ABAS05..

from page 2.6.40



Manifold bases for 15 mm directly operated solenoid valves.

Type ABAS05T

from page 2.6.60



Closing plate for manifold bases.

Code key

Series	Size	Positions
ABAS	**05**	**S**
ABAS	05 = 15 mm	S = 1
		0205 = 2
		0305 = 3
		0405 = 4
		0505 = 5
		0605 = 6
		0705 = 7
		0805 = 8
		0905 = 9
		1005 = 10

How to order

Series	Size	Positions
ABAS	**05**	**S**

Notes

For standard materials see the data sheet of single components.

Options in the same grid are alternative to each others.

Accessories

Type: **ABAS05S**

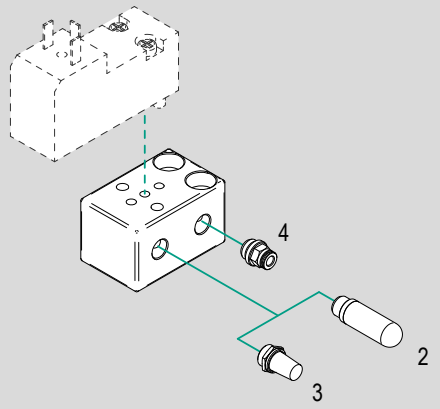

Type: **ABAS05..**

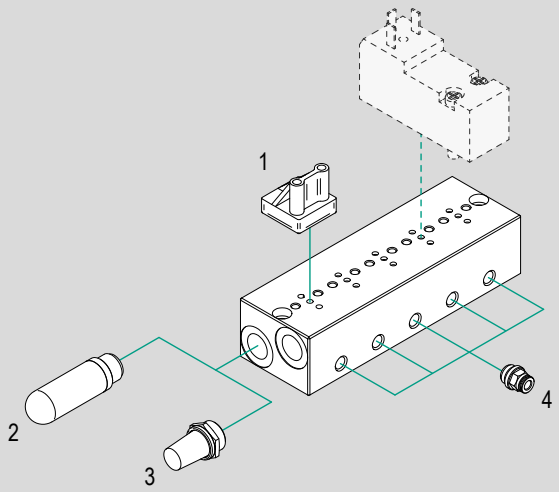

N.	Item	Description	Compliance	Matching		Code key & data sheet page
				ABAS05S	ABAS050205 ÷ ABAS051005	
1	ABAS05T	Closing plate	-	–	●	2.6.60
2	AS..	Plastic silencers	-	●	●	4.151.10
	SP..			●	●	4.151.20
3	A..	Sintered silencers		●	●	4.153.10
4	R..	Push-in fittings	UNI ISO 228/1 UNI ISO7/1 ISO R/232	●	●	4.2.1

Key

● matching accessory; – not matching accessory

Bases for 15 mm directly operated solenoid valves
Series ABAS05S

Main features

Version	Code	Item
Single base	034621	ABAS05S



Technical data

Version	Single base ABAS05S
Code	034621
Item	ABAS05S
Size	15 mm
Function	Single
Positions	1
Ports	M5
Matching valves	Series AE05

Standard materials

Description	Material
Body	Aluminium

Standard dimensions

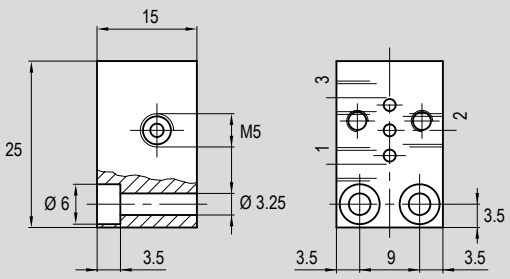

Bases for 15 mm directly operated solenoid valves
Series ABAS05..

Main features

Version	Code	Item
Manifold base 2 positions	034625	ABAS050205
Manifold base 3 positions	034626	ABAS050305
Manifold base 4 positions	034627	ABAS050405
Manifold base 5 positions	034628	ABAS050505
Manifold base 6 positions	034629	ABAS050605
Manifold base 7 positions	034630	ABAS050705
Manifold base 8 positions	034631	ABAS050805
Manifold base 9 positions	034632	ABAS050905
Manifold base 10 positions	034633	ABAS051005



Technical data

Version	Manifold base ABAS05..								
Code	034625	034626	034627	034628	034629	034630	034631	034632	034633
Item	ABAS050205	ABAS050305	ABAS050405	ABAS050505	ABAS050605	ABAS050705	ABAS050805	ABAS050905	ABAS051005
Size	15 mm								
Function	Manifold								
Positions	2	3	4	5	6	7	8	9	10
Ports	M5								
Matching valves	Series AE05								

Standard materials

Description	Material
Body	Aluminium

Standard dimensions

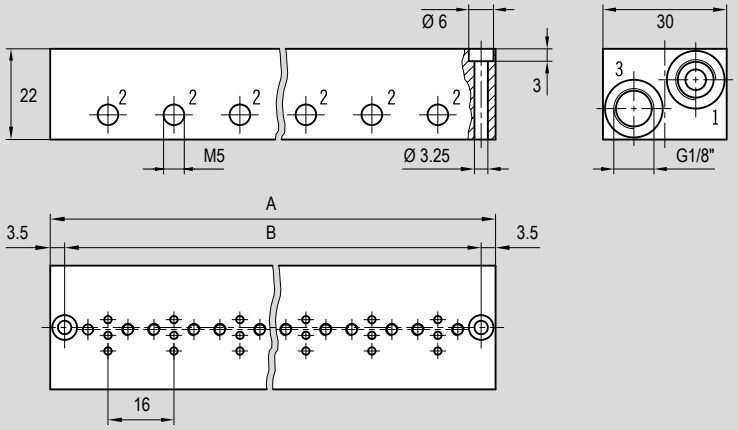

Item	Code	Positions	A	B
ABAS050205	034625	2	44	37
ABAS050305	034626	3	60	53
ABAS050405	034627	4	76	69
ABAS050505	034628	5	92	85
ABAS050605	034629	6	108	101
ABAS050705	034630	7	124	117
ABAS050805	034631	8	140	133
ABAS050905	034632	9	156	149
ABAS051005	034633	10	172	165

Main features

Version	Code	Item
Closing plate	034622	ABAS05T



Technical data

Version	Closing plate ABAS05T
Code	034622
Item	ABAS05T
Size	15 mm
Function	Closing plate for manifold bases
Positions	-
Ports	-
Matching	Manifold base ABAS05.. for valves series AE05

Standard materials

Description	Material
Body	PVC

Standard dimensions

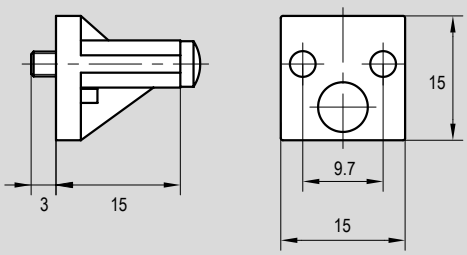

22 MM

directly operated solenoid valves



Find out our
key products

- **Solution for most applications**
- **Easy and intuitive choice**
- **Excellent value for money**
- **Wide availability**
- **Fast delivery**

Features and certifications

22 mm directly operated solenoid valves, available in size 1/8" and 1/4" (only for series A1..MD), 3/2 normally closed.
Coils and connectors to be ordered separately.
Supplied as standard in compliance to Reach and RoHS directives, and SIL certified. On request the valve body can be supplied according to 2014/34/EU ATEX Directive, classification Ex h, and also complete with ATEX coil and connector, in different classifications (see from page 2.320.1).

Series A1EM.. 1/8" 3/2 N.C.

from page 2.12.10



22 mm directly operated solenoid valves for single or modular mounting. Size 1/8", 3/2 normally closed, with spring return or bistabile manual override. Orifice 1,0 or 1,2 mm wide. Coils and connectors to be ordered separately.

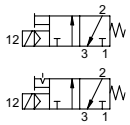

Series A1E1..MD 1/8" 3/2 N.C.

from page 2.14.10



22 mm directly operated solenoid valves for direct mounting on application (cylinder or actuator). Size 1/8", 3/2 normally closed, with bistable manual override.
Coils and connectors to be ordered separately.

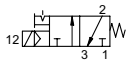

Series A1E2..MD 1/4" 3/2 N.C.

from page 2.14.10



22 mm directly operated solenoid valves for direct mounting on application (cylinder or actuator). Size 1/4", 3/2 normally closed, with bistable manual override.
Coils and connectors to be ordered separately.

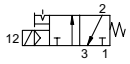

Series A1EM.. 1/8" 3/2 N.C. ATEX

from page 2.320.1



22 mm directly operated solenoid valves for single or modular mounting. Size 1/8", 3/2 normally closed, with spring return or bistabile manual override. Orifice 1,0 or 1,2 mm wide. Available according to 2014/34/EU ATEX Directive in different classifications.

Series A1E1..MD 1/8" 3/2 N.C. ATEX

from page 2.320.1



22 mm directly operated solenoid valves for direct mounting on application (cylinder or actuator). Size 1/8", 3/2 normally closed, with bistable manual override.
Available according to 2014/34/EU ATEX Directive in different classifications.

Series A1E2..MD 1/4" 3/2 N.C. ATEX

from page 2.320.1



22 mm directly operated solenoid valves for direct mounting on application (cylinder or actuator). Size 1/4", 3/2 normally closed, with bistable manual override.
Available according to 2014/34/EU ATEX Directive in different classifications.

Options

Description		Symbol	Suffix
High temperatures seals	-10°C ÷ +150°C		**V**
Low temperatures seals	-25°C ÷ +60°C		**BT**
ATEX valve body*			**/ATEX**
Special versions on request			**/S**

The options, when this is possible, can be combined with each other. For options matching see the table below; For code key see pages 2.10.4 e 2.10.5
*For valves complete with ATEX coil and connector, in different classifications, see page 2.320.1

Options matching

Type	Size	Function	Standard options matching		
			V	**BT**	**/ATEX**
A1EM..	1/8"	3/2 N.C.	●	●	●
A1E..MD	1/8"	3/2 N.C.	●	●	●
	1/4"		●	●	●

Key
● allowed matching; – not allowed matching

Code key valves series A1EM

Series	Actuation	Size	Function	Orifice	Manual override	Option	/	ATEX valve body
A1	**EM**	**1**	**30**	**12**	**M**		**/**	

- A1
- EM = Electric
- 1 = 1/8"
- 30 = 3/2 N.C.
- 10 = Ø 1,0 mm (12 bar)
- 12 = Ø 1,2 mm (10 bar)
- M = Spring return
- B = Bistable
- V = High temperatures seals
- BT = Low temperatures seals
- ATEX — CE Ex — II 2G Ex h IIC T5 Gb / II 2D Ex h IIIC T100°C Db

ATEX note

For ATEX coils and connectors choice, classification, features, dimensions and matching, see page 2.320.1

How to order

Series	Actuation	Size	Function	Orifice	Override
A1	**EM**	**1**	**30**	**12**	**M**

Notes

Options in the same grid are alternative to each others.

For further information on options and their matching, see page 2.10.3.

Coils and connectors to be ordered separately, see page 2.16.1

For further information on the ATEX 2014/34/EU Directive, on classifications and protections, see from page III.1

Standard materials

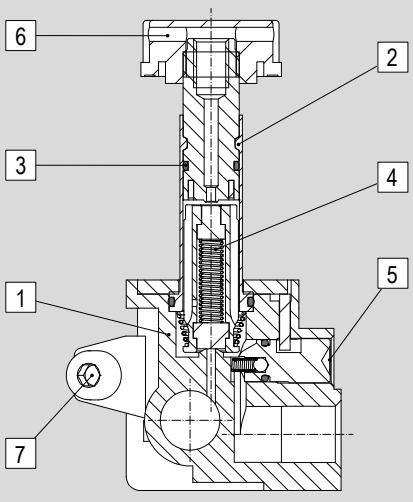

Position	Description	Material
1	Body	Zinc alloy die cast
2	Plunger	Brass
3	Seals	NBR
4	Springs	Spring steel
5	Manual override	Nickel-plated brass
6	Locking nut	Plastic
7	Screws	Zinc-plated steel

Code key valves series A1E..MD

Series	Actuation	Size	Function	Mounting	Option	/	ATEX valve body
A1	**E**	**1**	**30**	**MD**		**/**	

- A1
- E = Electric
- 1 = 1/8"
- 2 = 1/4"
- 30 = 3/2 N.C.
- MD = Direct
- Option:
  - V = High temperatures seals
  - BT = Low temperatures seals
- ATEX valve body: ATEX — CE Ex II 2G Ex h IIC T5 Gb / II 2D Ex h IIIC T100°C Db

ATEX note

For ATEX coils and connectors choice, classification, features, dimensions and matching, see page 2.320.1

How to order

Series	Actuation	Size	Function	Mounting
A1	**E**	**1**	**30**	**MD**

Notes

Options in the same grid are alternative to each others.

For further information on options and their matching, see page 2.10.3.

Coils and connectors for standard versions to be ordered separately, see page 2.16.1

For further information on the ATEX 2014/34/EU Directive, on classifications and protections, see from page III.1

Standard materials

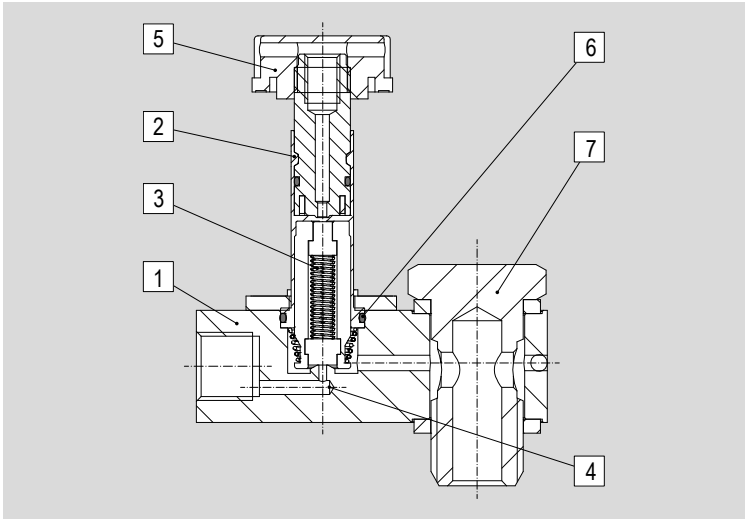

Position	Description	Material
1	Body	Anodized aluminium
2	Plunger	Brass
3	Springs	Spring steel
4	Manual override	Nickel-plated brass
5	Locking nut	Plastic
6	Seals	NBR
7	Screw	Nickel-plated brass

Accessories

Type: **A1EM..**

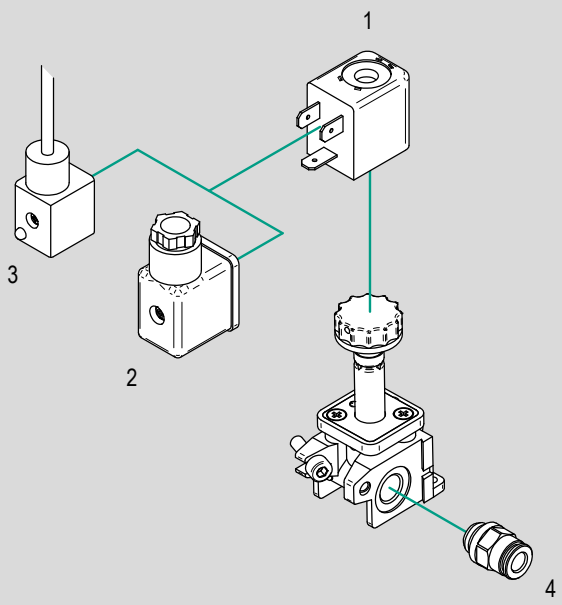

Type: **A1E..MD**

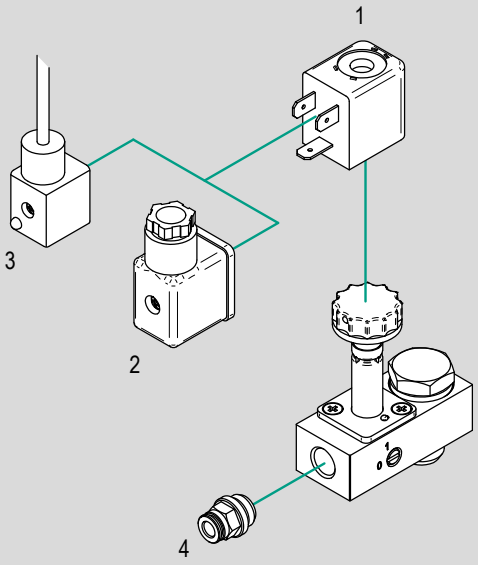

N.	Item	Description	Compliance	Matching			Code key page	Data sheet page
				A1EM..	A1E1..MD	A1E2..MD		
1	ASA12..	Coil	EN60204 VDE0580	●	●	●	2.16.1	2.315.10
2	A12209..	Connector	VDE 0110 - 1/89	●	●	●		2.318.12
3	A12209..K	Cabled connector		●	●	●		
4	R..	Push-in fittings	UNI ISO 228/1 UNI ISO7/1 ISO R/232	●	●	●	4.2.1	

Key
● matching accessory; – not matching accessory

22 mm directly operated solenoid valves
Series A1EM, 1/8" 3/2 N.C.

Main features

Version	Code	Item	Symbol
3/2 Normally closed, with spring return manual override, orifice Ø1.2 mm	034188	A1EM13012M	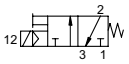
3/2 Normally closed, with bistable manual override, orifice Ø1.2 mm	034189	A1EM13012B	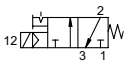
3/2 Normally closed, with spring return manual override, orifice Ø1.0 mm	034197	A1EM13010M	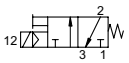
3/2 Normally closed, with bistable manual override, orifice Ø1.0 mm	034198	A1EM13010B	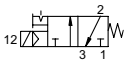



Technical data

Version	3/2 Normally closed, with spring return manual override, orifice Ø1.2 mm	3/2 Normally closed, with bistable manual override, orifice Ø1.2 mm	3/2 Normally closed, with spring return manual override, orifice Ø1.0 mm	3/2 Normally closed, with bistable manual override, orifice Ø1.0 mm
Code	034188	034189	034197	034198
Item	A1EM13012M	A1EM13012B	A1EM13010M	A1EM13010B
Size	1/8"			
Fluid	Filtered compressed air, min. 5µm, with or without lubrication.			
Pressure range	0 ÷ 10 bar		0 ÷ 12 bar	
Temperature range	-10°C ÷ +60°C (standard) -10°C ÷ +150°C (V) -25°C ÷ +60°C (BT)			
Orifice Ø	1.2 mm		1.0 mm	
Flow at 6 bar with ΔP 1 bar	29 Nl/min.			
Mounting	In every position			
Manual override	Spring return	Bistable	Spring return	Bistable

Notes

Coils and connectors for standard versions to be ordered separately.
For coils type ASA12 and ASA2 see from page 2.315.1. For connectors type A122 e A182 see from page 2.318.1

For valves complete with ATEX coil and connector, in different classifications, see page 2.320.1

Standard dimensions

Type: **3/2 N.C.**

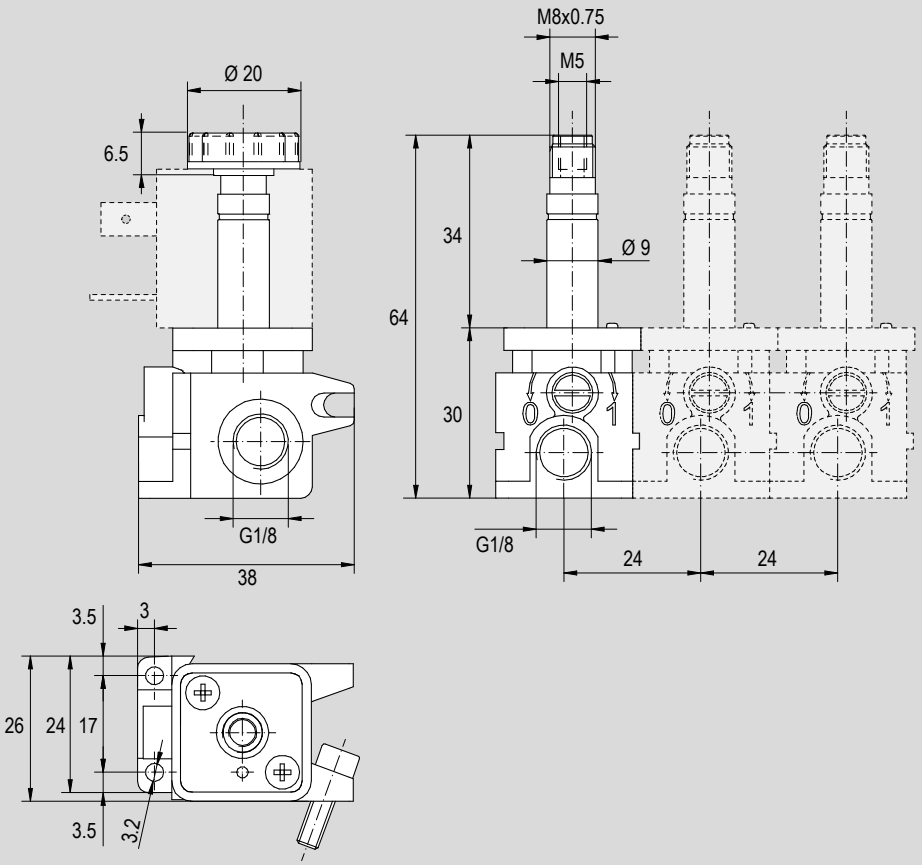

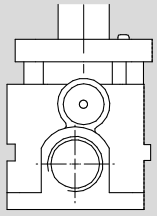

Manual override: Spring return

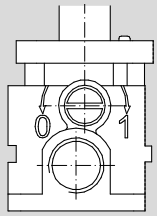

Manual override: Bistable

Version	Symbol	Code	Item
3/2 Normally closed, with spring return manual override, orifice Ø1.2 mm	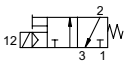	034188	A1EM13012M
3/2 Normally closed, with bistable manual override, orifice Ø1.2 mm	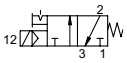	034189	A1EM13012B
3/2 Normally closed, with spring return manual override, orifice Ø1.0 mm	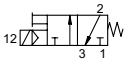	034197	A1EM13010M
3/2 Normally closed, with bistable manual override, orifice Ø1.0 mm	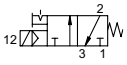	034198	A1EM13010B

22 mm directly operated solenoid valves

Series A1E..MD, 1/8" and 1/4" 3/2 N.C.

Main features

Version	Code	Item	Symbol
1/8", 3/2 N.C.	034226	A1E130MD	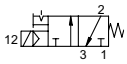
1/4", 3/2 N.C.	034227	A1E230MD	



Technical data

Version	1/8", 3/2 N.C.	1/4", 3/2 N.C.
Code	034226	034227
Item	A1E130MD	A1E230MD
Size	1/8"	1/4"
Fluid	Filtered compressed air, min. 5µm, with or without lubrication.	
Pressure range	0 ÷ 10 bar	
Temperature range	-10°C ÷ +60°C (standard) -10°C ÷ +150°C (V) -25°C ÷ +60°C (BT)	
Orifice Ø	1.2 mm	
Flow at 6 bar with ΔP 1 bar	29 Nl/min.	
Mounting	In every position	
Manual override	Bistable	
Weight	100 g.	

Notes

Coils and connectors for standard versions to be ordered separately.
For coils type ASA12 and ASA2 see from page 2.315.1. For connectors type A122 e A182 see from page 2.318.1

For valves complete with ATEX coil and connector, in different classifications, see page 2.320.1

Standard dimensions

Type: **1/8" 3/2 N.C.**

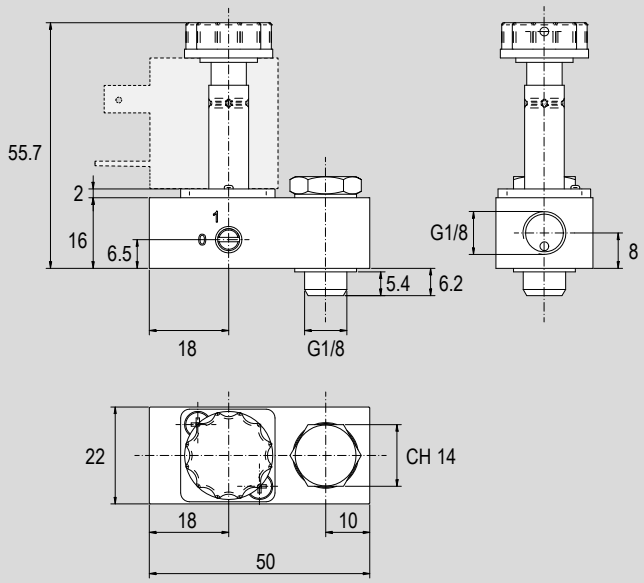

Version	Symbol	Code	Item
1/8", 3/2 N.C., with bistable manual override	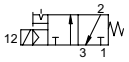	034226	A1E130MD

Standard dimensions

Type: **1/4" 3/2 N.C.**

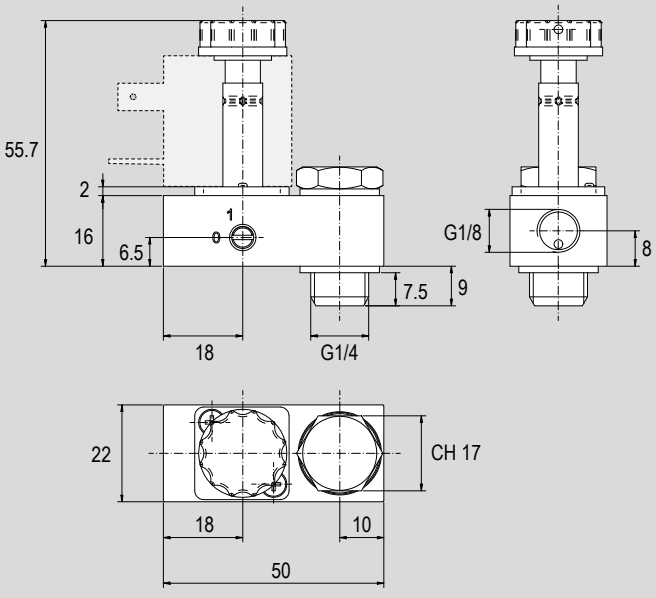

Version	Symbol	Code	Item
1/4", 3/2 N.C., with bistable manual override	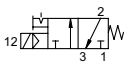	034227	A1E230MD

Direct mounting on microcylinder

Example of 22 mm. directly oprated solenoid valves series A1EMD application on a single acting microcylinder series MSM (fo these cylinders see page 1.2.1).

These valves can be directly mounted on the air connection of the cylinder without tubes.

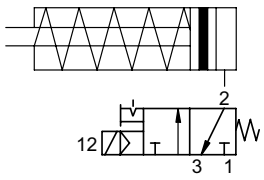

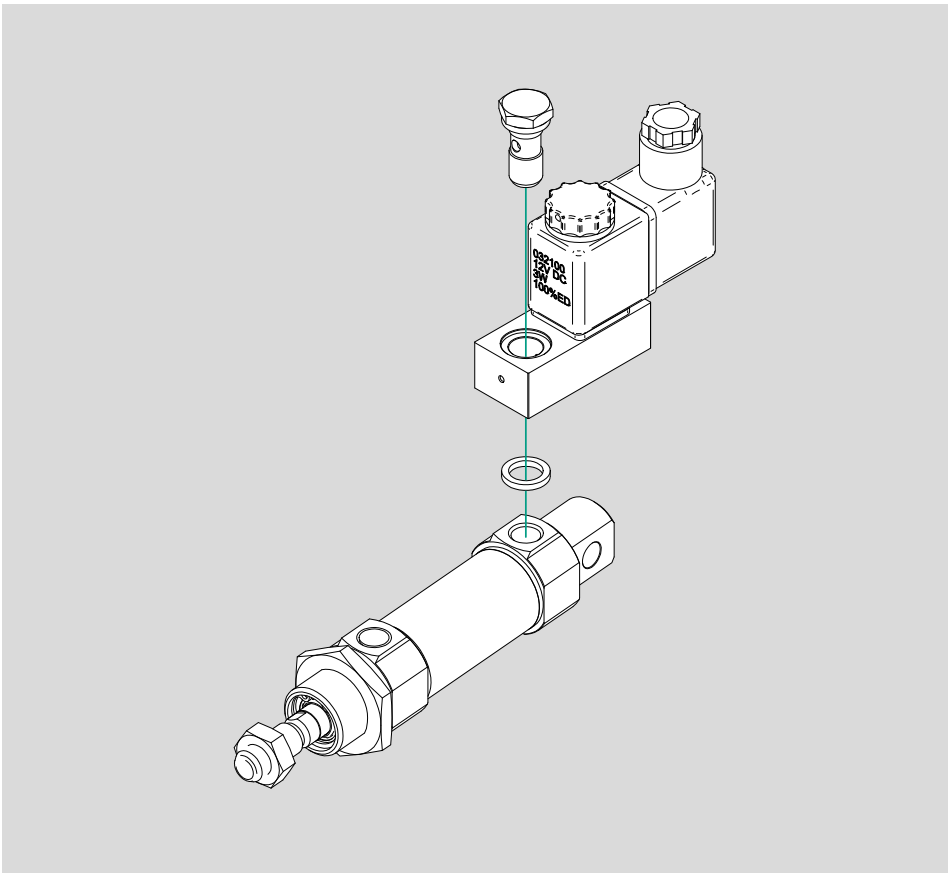

Direct mounting on actuator

Example of 22 mm. directly oprated solenoid valves series A1EMD application on a single acting rotary actuator series AR..SE (for these actuators see page 2.400.1).

These valves can be directly mounted on the air connection of the actuator without tubes or plates.

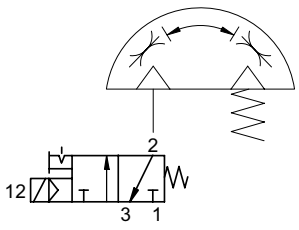

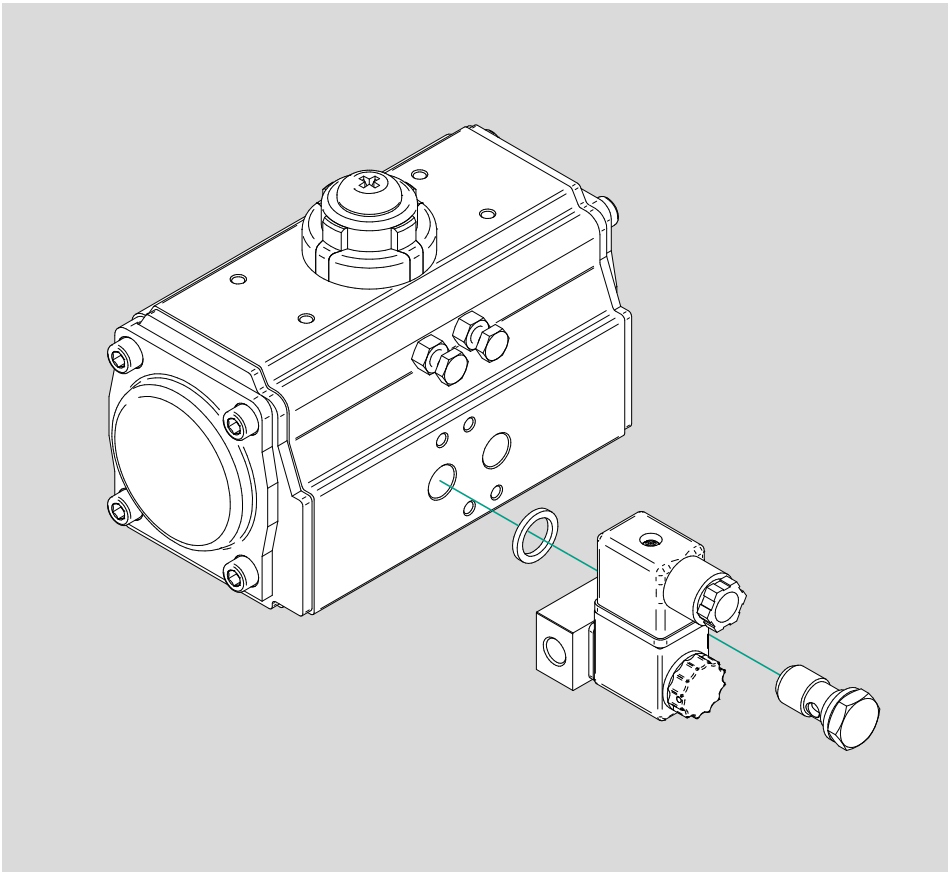

Coils ASA12..



Voltage	Code	Item	Matching
12V DC	032100	ASA1201200	A1EM A1E..MD
12V AC	032101	ASA1201250	
24V DC	032102	ASA1202400	
24V AC	032103	ASA1202450	
48V AC	032104	ASA1204850	
110V AC	032105	ASA1211050	
230V AC	032106	ASA1223050	

Connectors A122..*



Code	Item	Description
032118	A12209N	Black standard
033521	A12209NK	Black standard cabled
032204	A12209T1	LED+VDR transparent 24VAC-DC
032205	A12209T2	LED+VDR transparent 115VAC-DC
032206	A12209T3	LED+VDR transparent 230VAC-DC
033522	A12209N1K	LED+VDR black cabled 24VAC-DC
033523	A12209N2K	LED+VDR black cabled 115VAC-DC
033524	A12209N3K	LED+VDR black cabled 230VAC-DC

* For coils type ASA12

SOLENOID OPERATED
valves Series A1



Find out our
key products

- **Solution for most applications**
- **Easy and intuitive choice**
- **Excellent value for money**
- **Wide availability**
- **Fast delivery**

Features and certifications

Spool valves, with static seals, high flow, for panel or sub-base mounting. Available in sizes 1/8", 1/4" and 1/2", solenoid operated also with external air pilot, with functions: 3/2 solenoid/spring normally closed, 3/2 solenoid/spring normally open, 3/2 solenoid/solenoid, 5/2 solenoid/spring, 5/2 solenoid/solenoid and solenoid/solenoid differential, 5/3 with open centres, closed centres and pressurized centres.
Coils and connectors to be ordered separately.
Supplied as standard in compliance to Reach and RoHS directives, and SIL certified. On request the valve body can be supplied according to 2014/34/EU ATEX Directive, classification Ex h, and also complete with ATEX coil and connector, in different classifications (see from page 2.320.1).

Series A1 1/8" 3/2 Solenoid/Spring

from page 2.21.10



Series of spool valves, with static seals, high flow, for panel or sub-base mounting.
Available in size 1/8", 3/2 solenoid/spring normally closed also with external air pilot, or 3/2 solenoid/spring normally open.
Coils and connectors to be ordered separately.

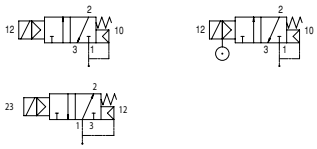

Series A1 1/8" 3/2 Solenoid/Solenoid

from page 2.21.30



Series of spool valves, with static seals, high flow, for panel or sub-base mounting.
Available in size 1/8", 3/2 solenoid/solenoid, also with external air pilot.
Coils and connectors to be ordered separately.



Series A1 1/8" 5/2 Solenoid/Spring

from page 2.21.50



Series of spool valves, with static seals, high flow, for panel or sub-base mounting.
Available in size 1/8", 5/2 solenoid/spring also with external air pilot.
Coils and connectors to be ordered separately.



Series A1 1/8" 5/2 Solenoid/Solenoid

from page 2.21.70



Series of spool valves, with static seals, high flow, for panel or sub-base mounting.
Available in size 1/8", 5/2 solenoid/solenoid also with external air pilot, and 5/2 solenoid/solenoid differential.
Coils and connectors to be ordered separately.

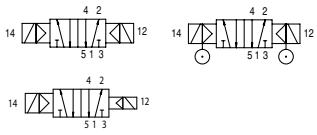

Series A1 1/8" 5/3

from page 2.21.90



Series of spool valves, with static seals, high flow, for panel or sub-base mounting.
Available in size 1/8", 5/3 closed centres, 5/3 open centres and 5/3 pressurized centres, solenoid operated also with external air pilot.
Coils and connectors to be ordered separately.

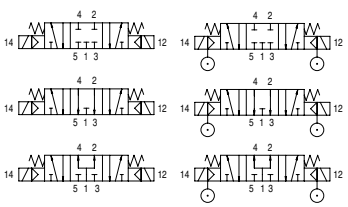

Series A1 1/8" 3/2 - 5/2 - 5/3 ATEX

from page 2.320.1



Series of spool valves, with static seals, high flow, for panel or sub-base mounting.
Available in size 1/8", 3/2 solenoid/spring normally closed, normally open and solenoid/solenoid, 5/2 solenoid/spring and solenoid/solenoid, an 5/3 open centres, closed centres and pressurized centres, solenoid operated, supplied according to 2014/34/EU ATEX Directive in different classifications.

Series A1 1/4" 3/2 Solenoid/Spring

from page 2.23.10



Series of spool valves, with static seals, high flow, for panel or sub-base mounting.
Available in size 1/4", 3/2 solenoid/spring normally closed also with external air pilot, or 3/2 solenoid/spring normally open.
Coils and connectors to be ordered separately.

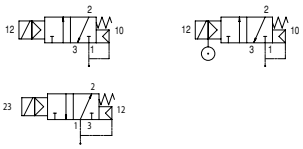

Series A1 1/4" 3/2 Solenoid/Solenoid

from page 2.23.30



Series of spool valves, with static seals, high flow, for panel or sub-base mounting.
Available in size 1/4", 3/2 solenoid/solenoid also with external air pilot.
Coils and connectors to be ordered separately.



Series A1 1/4" 5/2 Solenoid/Spring

from page 2.23.50



Series of spool valves, with static seals, high flow, for panel or sub-base mounting.
Available in size 1/4", 5/2 solenoid/spring also with external air pilot.
Coils and connectors to be ordered separately.

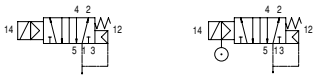

Series A1 1/4" 5/2 Solenoid/Solenoid

from page 2.23.70



Series of spool valves, with static seals, high flow, for panel or sub-base mounting.
Available in size 1/4", 5/2 solenoid/solenoid also with external air pilot, and 5/2 solenoid/solenoid differential.
Coils and connectors to be ordered separately.

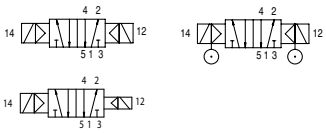

Series A1 1/4" 5/3

from page 2.23.90



Series of spool valves, with static seals, high flow, for panel or sub-base mounting.
Available in size 1/4", 5/3 closed centres, 5/3 open centres and 5/3 pressurized centres, solenoid operated also with external air pilot.
Coils and connectors to be ordered separately.

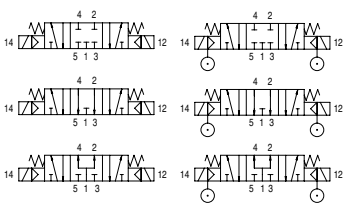

Series A1 1/4" 3/2 - 5/2 - 5/3 ATEX

from page 2.320.1



Series of spool valves, with static seals, high flow, for panel or sub-base mounting.
Available in size 1/4", 3/2 solenoid/spring normally closed, normally open and solenoid/solenoid, 5/2 solenoid/spring and solenoid/solenoid, an 5/3 open centres, closed centres and pressurized centres, solenoid operated, supplied according to 2014/34/EU ATEX Directive in different classifications.

Series A1 1/2" 3/2 Solenoid/Spring

from page 2.25.10



Series of spool valves, with static seals, high flow, for panel mounting with screws.
Available in size 1/2", 3/2 solenoid/spring normally closed also with external air pilot, or 3/2 solenoid/spring normally open.
Coils and connectors to be ordered separately.

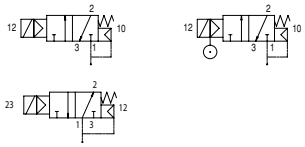

Series A1 1/2" 3/2 Solenoid/Solenoid

from page 2.25.30



Series of spool valves, with static seals, high flow, for panel mounting with screws.
Available in size 1/2", 3/2 solenoid/solenoid also with external air pilot.
Coils and connectors to be ordered separately.



Series A1 1/2" 5/2 Solenoid/Spring

from page 2.25.50



Series of spool valves, with static seals, high flow, for panel mounting with screws.
Available in size 1/2", 5/2 solenoid/spring also with external air pilot.
Coils and connectors to be ordered separately.

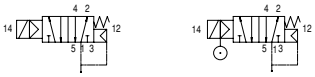

Series A1 1/2" 5/2 Solenoid/Solenoid

from page 2.25.70



Series of spool valves, with static seals, high flow, for panel mounting with screws.
Available in size 1/2", 5/2 solenoid/solenoid also with external air pilot, and 5/2 solenoid/solenoid differential.
Coils and connectors to be ordered separately.

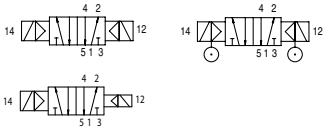

Series A1 1/2" 5/3

from page 2.25.90



Series of spool valves, with static seals, high flow, for panel mounting with screws.
Available in size 1/2", 5/3 closed centres, 5/3 open centres and 5/3 pressurized centres, solenoid operated, also with external air pilot.
Coils and connectors to be ordered separately.

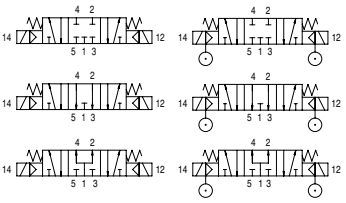

Series A1 1/2" 3/2 - 5/2 - 5/3 ATEX

from page 2.320.1



Series of spool valves, with static seals, high flow, for panel mounting with screws.
Available in size 1/2", 3/2 solenoid/spring normally closed, normally open and solenoid/solenoid, 5/2 solenoid/spring and solenoid/solenoid, an 5/3 open centres, closed centres and pressurized centres, solenoid operated, supplied according to 2014/34/EU ATEX Directive in different classifications.

Options

Description		Symbol	Suffix
Low temperatures seals	-25°C ÷ +60°C		**BT**
ATEX valve body*			**/ATEX**
Special versions on request			**/S**

The options, when this is possible, can be combined with each other. For options matching see the table below; For code key see from page 2.20.6
*For valves complete with ATEX coil and connector, in different classifications, see page 2.320.1.

Options matching

Series	Size	Function		Standard options matching	
				BT	**/ATEX**
A1	1/8"	3/2	Solenoid/Spring	●	●
			Solenoid/Solenoid	●	●
		5/2	Solenoid/Spring	●	●
			Solenoid/Solenoid	●	●
		5/3		●	●
	1/4"	3/2	Solenoid/Spring	●	●
			Solenoid/Solenoid	●	●
		5/2	Solenoid/Spring	●	●
			Solenoid/Solenoid	●	●
		5/3		●	●
	1/2"	3/2	Solenoid/Spring	●	●
			Solenoid/Solenoid	●	●
		5/2	Solenoid/Spring	●	●
			Solenoid/Solenoid	●	●
		5/3		●	●

Key
● allowed matching; - not allowed matching

Code key

Series	Actuation	Size	Function	Options	/	ATEX valve body
A1	**E**	**2**	**50**		**/**	

Series
- A1

Actuation
- E = Electric
- K (1) = Electric with external air pilot

Size
- 1 = 1/8"
- 2 = 1/4"
- 4 = 1/2"

Function
- 30 = 3/2 Normally closed
- 31 = 3/2 Normally open
- 32 = 3/2 Solenoid/Solenoid
- 50 = 5/2 Solenoid/Spring
- 51 = 5/2 Solenoid/Solenoid
- 52 = 5/2 Solenoid/Solenoid differential
- 70 = 5/3 Closed Centres
- 71 = 5/3 Open Centres
- 72 = 5/3 Pressurized Centres

Options
- BT = Low temperatures seals

ATEX valve body

ATEX*	CE Ex II 2G Ex h IIB T5 Gb II 2D Ex h IIIC T100°C Db
ATEX**	CE Ex II 2G Ex h IIC T5 Gb II 2D Ex h IIIC T100°C Db

* For size 1/8" and 1/4"
** For size 1/2"

ATEX note

For ATEX coils and connectors choice, classification, features, dimensions and matching, see page 2.320.1

For further information on the ATEX 2014/34/EU Directive, on classifications and protections, see from page III.1

How to order

Series	Actuation	Size	Function	Option
A1	**E**	**2**	**50**	**-**

Notes

Options in the same grid are alternative to each others.

For further information on options and their matching, see page 2.20.5.

(1) Electrical actuation with external air pilot (K) is available only for function 3/2 N.C. (30), 3/2 solenoid/solenoid (32), 5/2 solenoid/spring (50), 5/2 solenoid/solenoid (51) and 5/3 (70, 71, 72).

Coils and connectors to be ordered separately, see page 2.27.1

Standard materials

Size: **1/8"**
1/4"

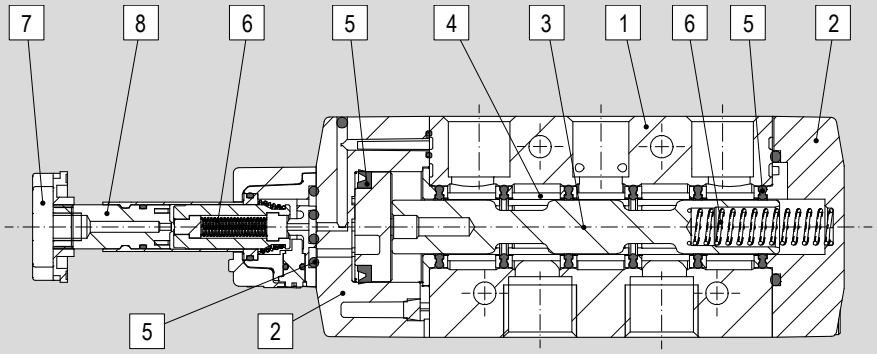

Size: **1/2"**

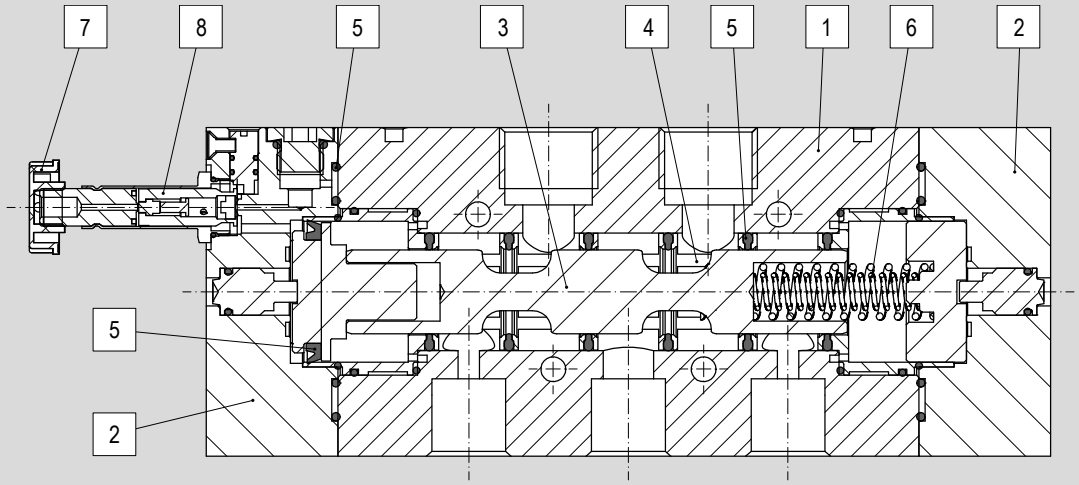

Position	Description	Material		
		1/8"	1/4"	1/2"
1	Body	Die-cast painted aluminium		Anodized aluminium
2	Covers	Tecnopolymer		Anodized aluminium
3	Spool	Hard anodized aluminium		
4	Distancers	Tecnopolymer		
5	Seals	HNBR		
6	Springs	Spring steel		
7	Locking nut	Plastic		
8	Plunger	Brass		

For coils materials see page 2.315.1
For connectors materials see page 2.318.1

Accessories

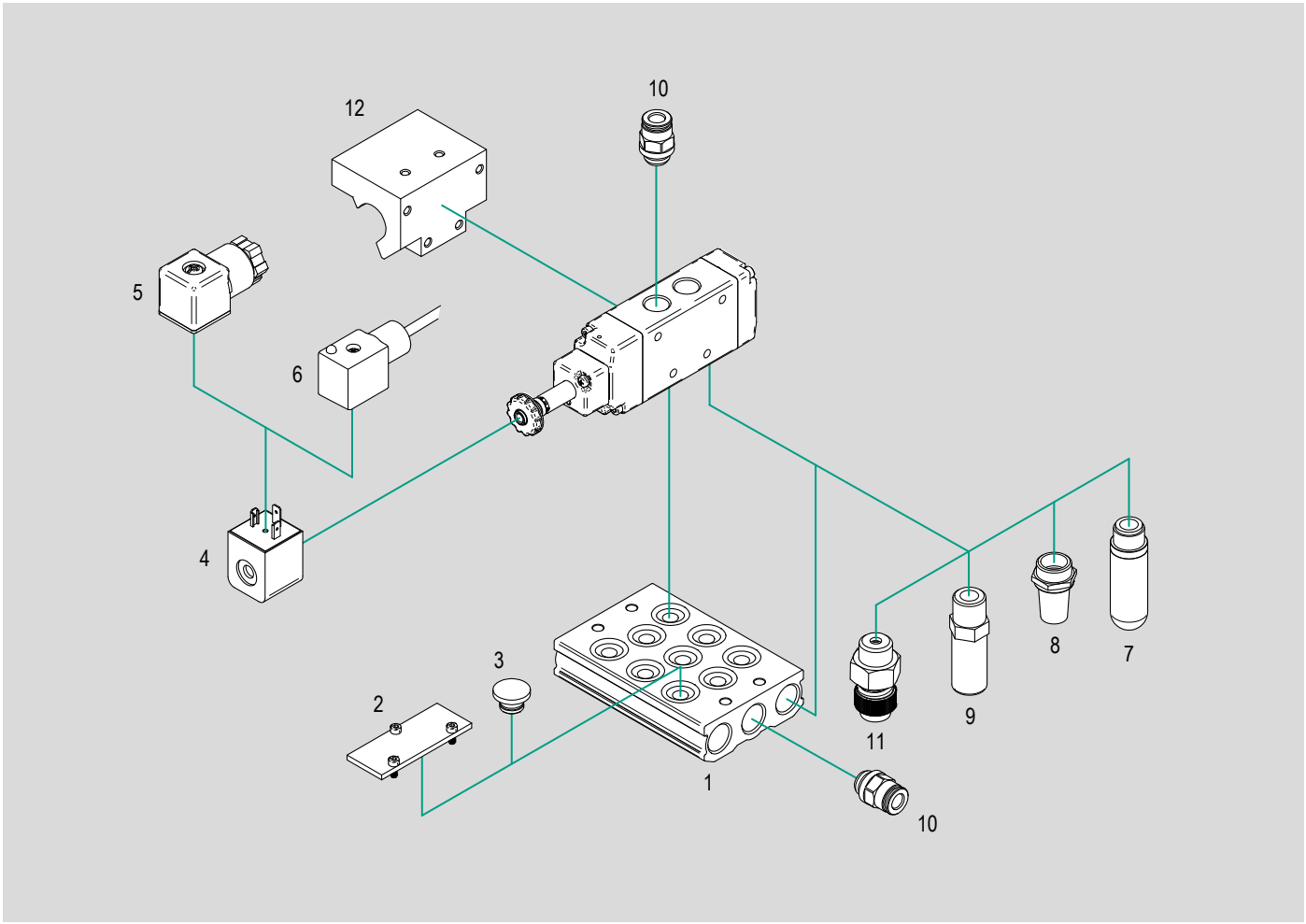

N.	Item	Description	Compliance	Matching			Code key page	Data sheet page
				1/8"	1/4"	1/2"		
1	A1B..	Sub-bases	-	●	●	–	2.27.1	2.38.1
2	A1C..	Closing plates for sub-bases	-	●	●	–		2.38.30
3	A1T..	Plugs for sub-bases	-	●	●	–		
4	ASA12..	Coil	EN60204 VDE0580	●	●	●		2.315.10
	ASA2..		EN60204.1 VDE0580	●	●	●		2.315.11
5	A12209..	Connector	VDE 0110 - 1/89	●	●	●		2.318.12
	A18209..			●	●	●		2.318.14
6	A12209..K	Cabled connector		●	●	●		2.318.12
	A18209..K			●	●	●		2.318.14
7	AS..	Plastic silencers	-	●	●	●	4.151.10	
	SP..			●	●	●	4.151.20	
8	A..	Sintered silencers	-	●	●	●	4.153.10	
9	M..	Metal silencers	-	●	●	●	4.155.10	
10	R..	Push-in fittings	UNI ISO 228/1 UNI ISO7/1 ISO R/232	●	●	●	4.2.1	
11	A..	Silenced exhaust restrictors	-	●	●	●	4.97.1	
12	PSV..	Plate for ISO cylinders	ISO15552	●	●	●	2.27.2	2.39.1

Key
● matching accessory; – not matching accessory

Solenoid operated valves series A1
1/8", 3/2 Solenoid/Spring

Main features

Version	Code	Item	Symbol
3/2 Normally closed	034003	A1E130	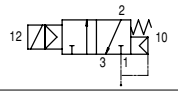
3/2 Normally closed with external air pilot	034006	A1K130	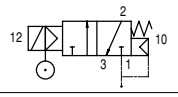
3/2 Normally open	034004	A1E131	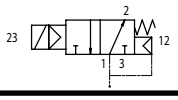



Technical data

Version		3/2 Normally closed	3/2 Normally closed with external air pilot	3/2 Normally open
Code		034003	034006	034004
Item		A1E130	A1K130	A1E131
Size		1/8"		
Fluid		Compressed air with or without lubrication. Lubrication, if started, must be continued.		
Pressure range		1,5 ÷ 10 bar		
Minimum external air pressure		-	1,5 bar	-
Temperature range		-10°C ÷ +60°C (standard) -25°C ÷ +60°C (BT)		
Plunger Ø		9 mm		
Orifice Ø		6.5 mm		
Flow at 6 bar with ΔP 1 bar		650 Nl/min.		
Mounting		In every position		
Manual override		Bistable		
Response time at 6 bar	Energizing	35 ms.		
	De-energizing	15 ms.		

Notes

Coils and connectors for standard versions to be ordered separately.
For coils type ASA12 and ASA2 see from page 2.315.1. For connectors type A122 e A182 see from page 2.318.1

For valves complete with ATEX coil and connector, in different classifications, see page 2.320.1

Standard dimensions

Type: **3/2 N.C.**
3/2 N.O.

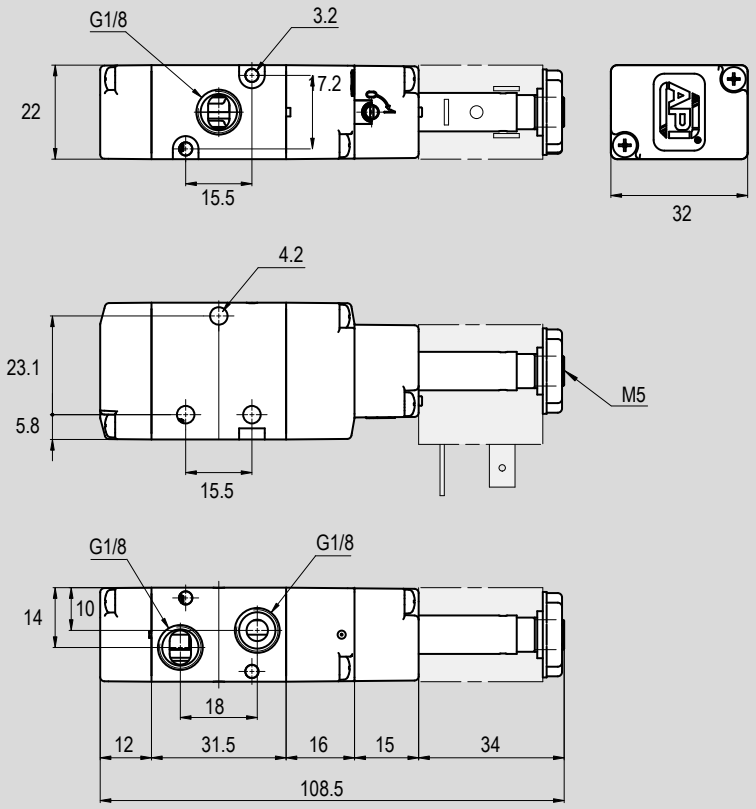

Version	Symbol	Code	Item
1/8" 3/2 Normally closed	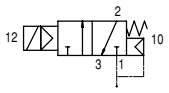	034003	A1E130
1/8" 3/2 Normally open	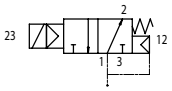	034004	A1E131

Standard dimensions

Type: **3/2 N.C. with external air pilot**

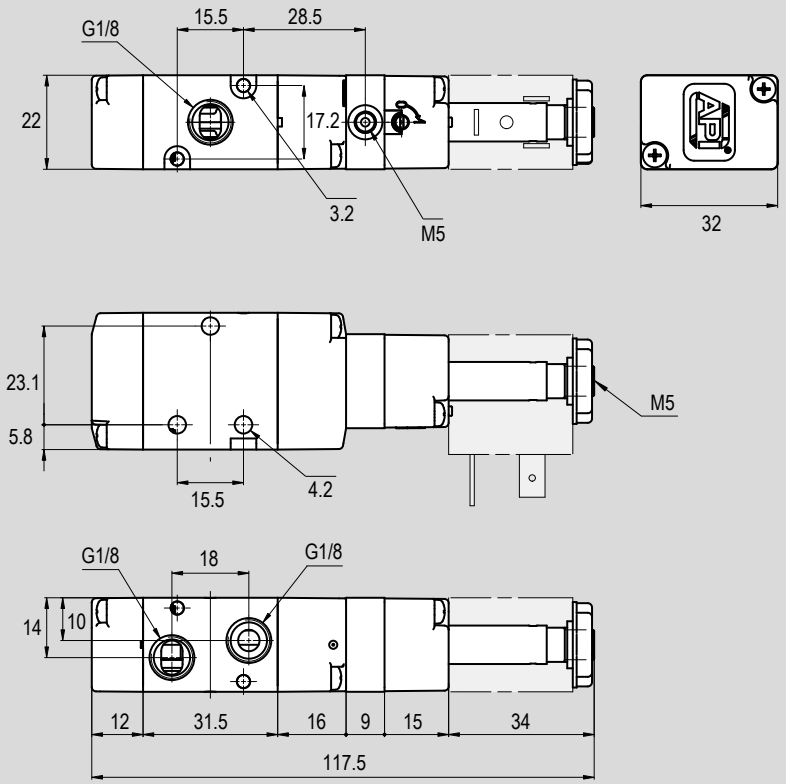

Version	Symbol	Code	Item
1/8" 3/2 Normally closed with external air pilot	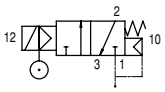	034006	A1K130

Main features

Version	Code	Item	Symbol
3/2 solenoid/solenoid	034005	A1E132	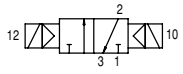
3/2 solenoid/solenoid with external air pilot	034007	A1K132	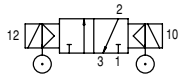



Technical data

Version		3/2 solenoid/solenoid	3/2 solenoid/solenoid with external air pilot
Code		034005	034007
Item		A1E132	A1K132
Size		1/8"	
Fluid		Compressed air with or without lubrication. Lubrication, if started, must be continued.	
Pressure range		1 ÷ 10 bar	
Minimum external air pressure		-	1,5 bar
Temperature range		-10°C ÷ +60°C (standard) -25°C ÷ +60°C (BT)	
Plunger Ø		9 mm	
Orifice Ø		6.5 mm	
Flow at 6 bar with ΔP 1 bar		650 Nl/min.	
Mounting		In every position	
Manual override		Bistable	
Response time at 6 bar	Energizing	20 ms.	
	De-energizing	20 ms.	

Notes

Coils and connectors for standard versions to be ordered separately.
For coils type ASA12 and ASA2 see from page 2.315.1. For connectors type A122 e A182 see from page 2.318.1

For valves complete with ATEX coil and connector, in different classifications, see page 2.320.1

Standard dimensions

Type: **3/2 solenoid/solenoid**

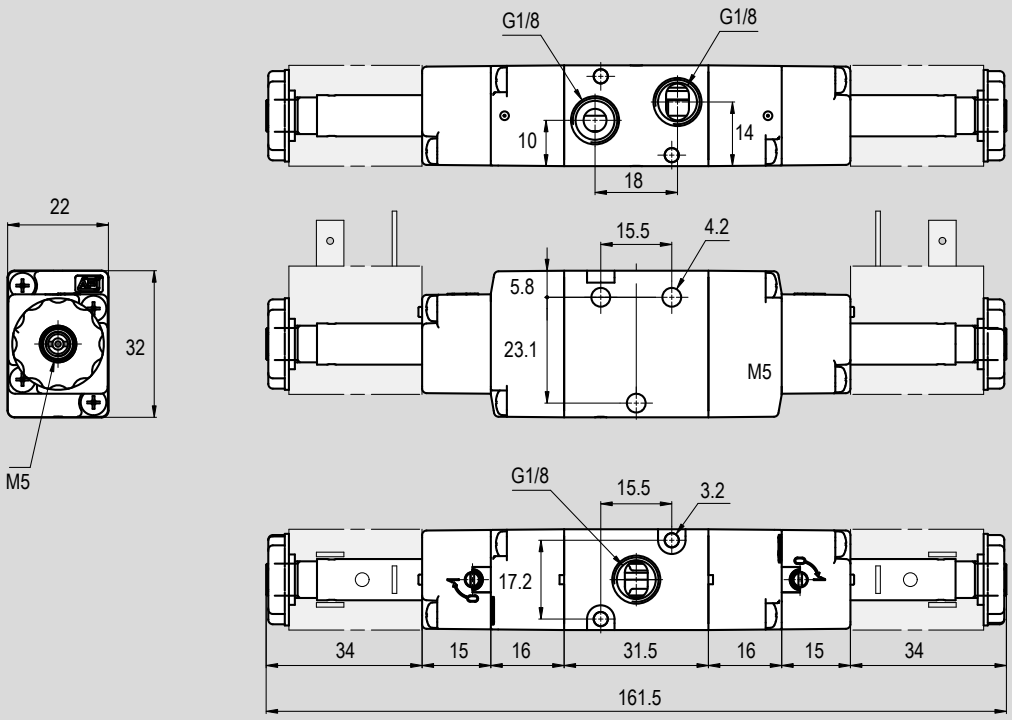

Version	Symbol	Code	Item
1/8" 3/2 solenoid/solenoid	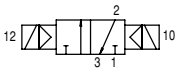	034005	A1E132

Standard dimensions

Type: **3/2 solenoid/solenoid with external air pilot**

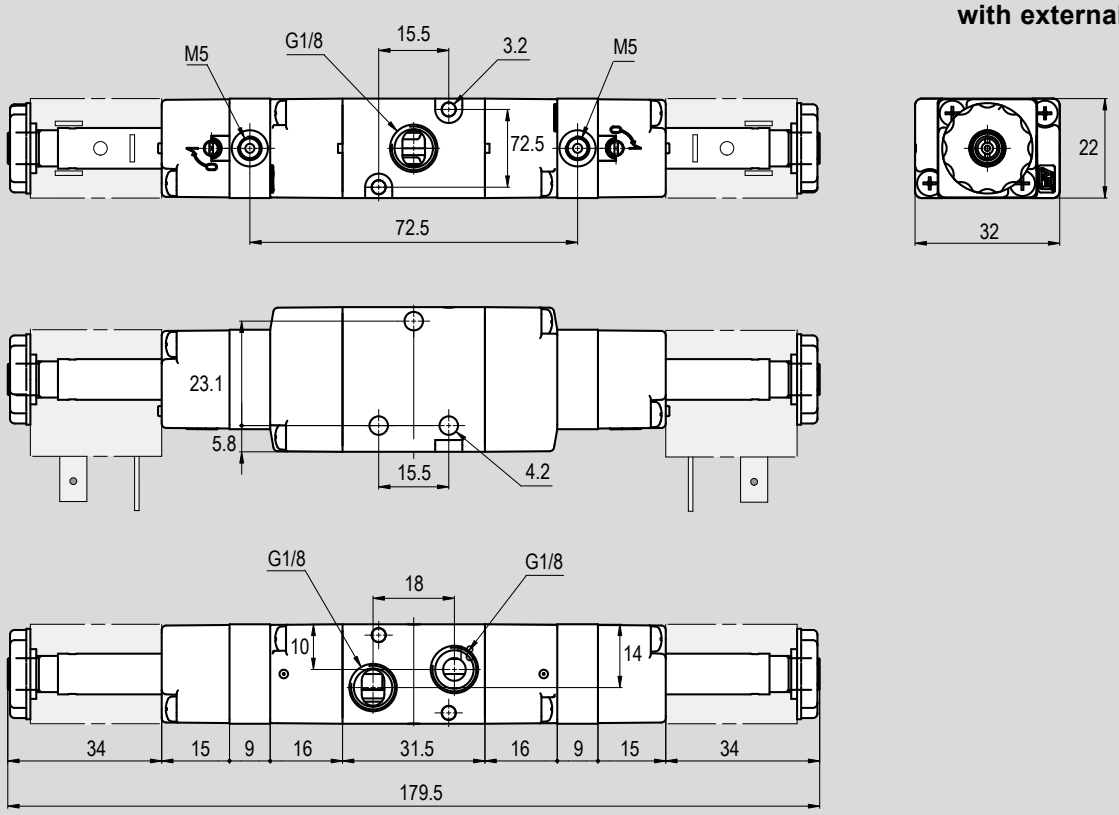

Version	Symbol	Code	Item
1/8" 3/2 solenoid/solenoid with external air pilot	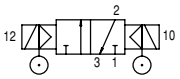	034007	A1K132

Solenoid operated valves series A1
1/8", 5/2 Solenoid/Spring

Main features

Version	Code	Item	Symbol
5/2 solenoid/spring	034011	A1E150	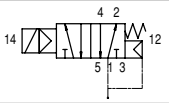
5/2 solenoid/spring with external air pilot	034012	A1K150	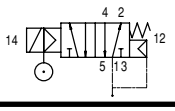



Technical data

Version		5/2 solenoid/spring	5/2 solenoid/spring with external air pilot
Code		034011	034012
Item		A1E150	A1K150
Size		1/8"	
Fluid		Compressed air with or without lubrication. Lubrication, if started, must be continued.	
Pressure range		1,5 ÷ 10 bar	
Minimum external air pressure		-	1,5 bar
Temperature range		-10°C ÷ +60°C (standard) -25°C ÷ +60°C (BT)	
Plunger Ø		9 mm	
Orifice Ø		6.5 mm	
Flow at 6 bar with ΔP 1 bar		650 Nl/min.	
Mounting		In every position	
Manual override		Bistable	
Response time at 6 bar	Energizing	35 ms.	
	De-energizing	15 ms.	

Notes

Coils and connectors for standard versions to be ordered separately.
For coils type ASA12 and ASA2 see from page 2.315.1. For connectors type A122 e A182 see from page 2.318.1

For valves complete with ATEX coil and connector, in different classifications, see page 2.320.1

Standard dimensions

Type: **5/2 solenoid/spring**

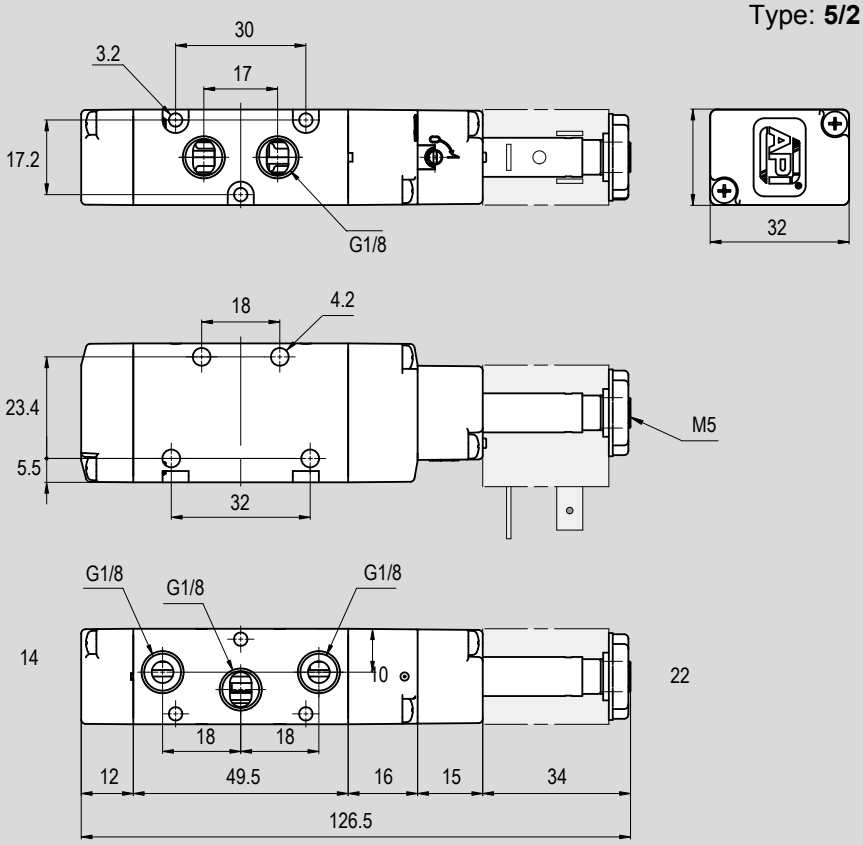

Version	Symbol	Code	Item
1/8" 5/2 solenoid/spring	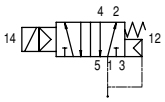	034011	A1E150

Standard dimensions

Type: **5/2 solenoid/spring with external air pilot**

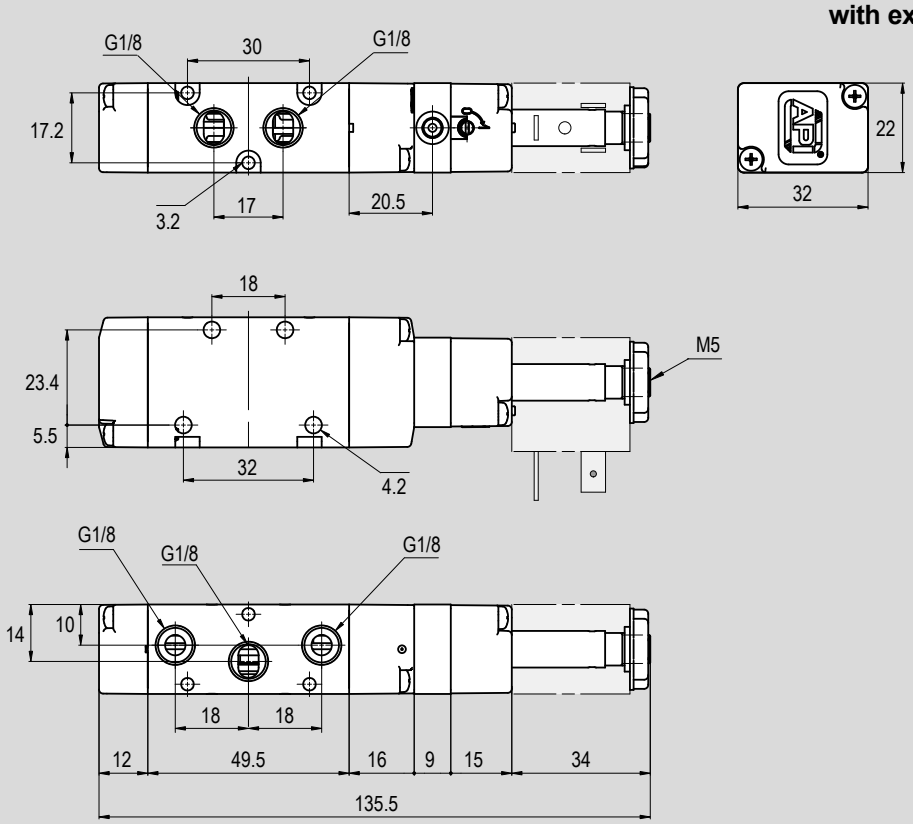

Version	Symbol	Code	Item
1/8" 5/2 solenoid/spring with external air pilot	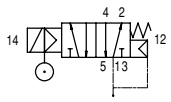	034012	A1K150

Main features

Version	Code	Item	Symbol
5/2 solenoid/solenoid	034021	A1E151	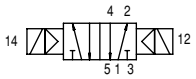
5/2 solenoid/solenoid differential	034222	A1E152	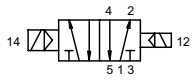
5/2 solenoid/solenoid with external air pilot	034008	A1K151	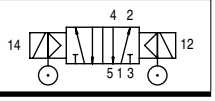



Technical data

Version		5/2 bistabile	5/2 solenoid/solenoid differential	5/2 solenoid/solenoid with external air pilot
Code		034021	034222	034008
Item		A1E151	A1E152	A1K151
Size		1/8"		
Fluid		Compressed air with or without lubrication. Lubrication, if started, must be continued.		
Pressure range		1 ÷ 10 bar		
Minimum external air pressure		-		1,5 bar
Temperature range		-10°C ÷ +60°C (standard) -25°C ÷ +60°C (BT)		
Plunger Ø		9 mm		
Orifice Ø		6.5 mm		
Flow at 6 bar with ΔP 1 bar		650 Nl/min.		
Mounting		In every position		
Manual override		Bistable		
Response time at 6 bar	Energizing	20 ms.		
	De-energizing	20 ms.		

Notes

Coils and connectors for standard versions to be ordered separately.
For coils type ASA12 and ASA2 see from page 2.315.1. For connectors type A122 e A182 see from page 2.318.1

For valves complete with ATEX coil and connector, in different classifications, see page 2.320.1

Standard dimensions

Type: **5/2 solenoid/solenoid**
5/2 sol./sol. differential

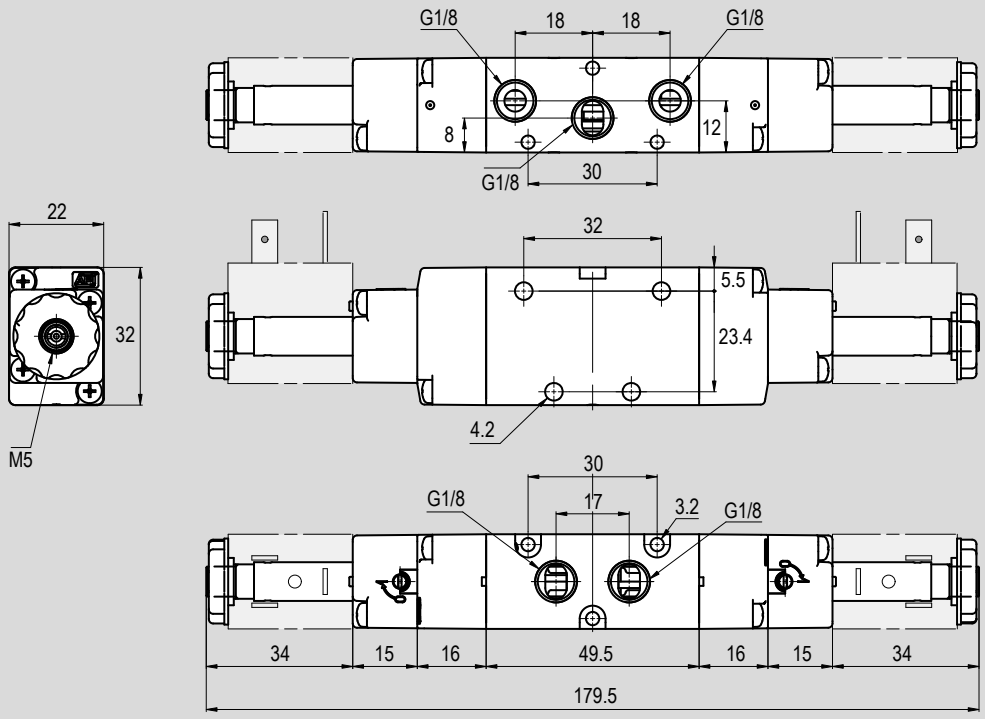

Version	Symbol	Code	Item
1/8" 5/2 solenoid/solenoid	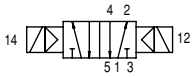	034021	A1E151
1/8" 5/2 solenoid/solenoid differential	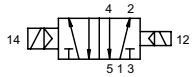	034222	A1E152

Standard dimensions

Type: **5/2 solenoid/solenoid with external air pilot**

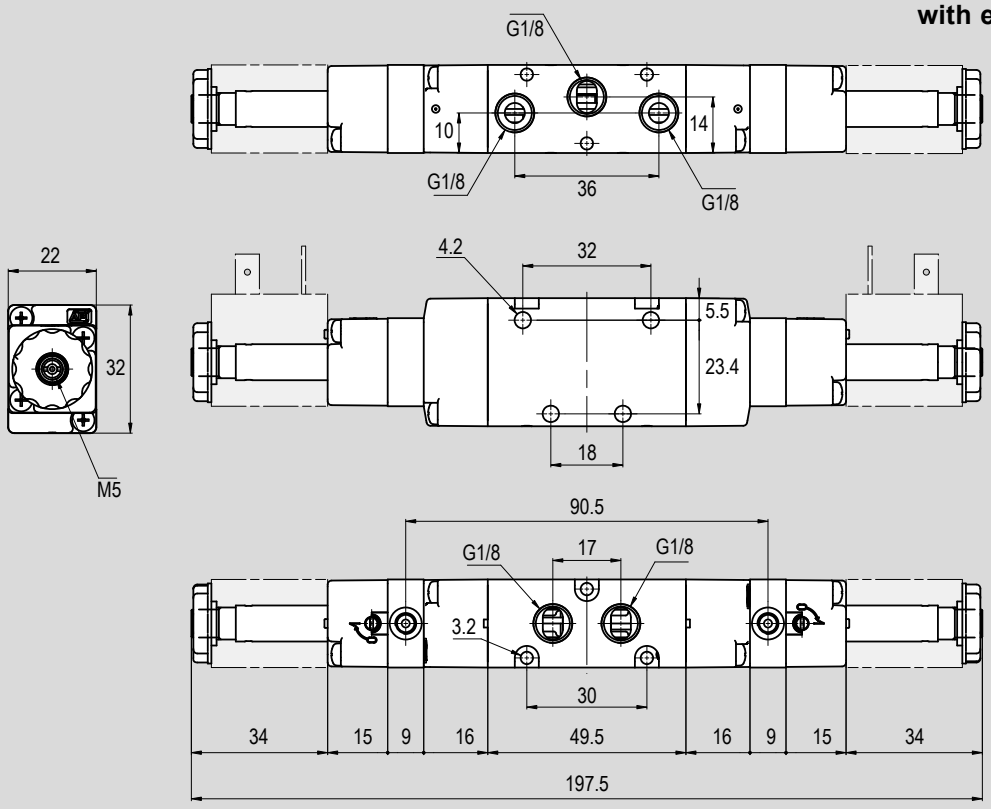

Version	Symbol	Code	Item
1/8" 5/2 solenoid/solenoid with external air pilot	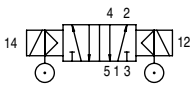	034008	A1K151

Solenoid operated valves series A1
1/8", 5/3

Main features

Version	Code	Item	Symbol
5/3 closed centres	034031	A1E170	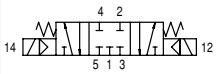
5/3 open centres	034033	A1E171	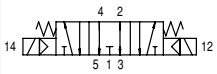
5/3 pressurized centres	034032	A1E172	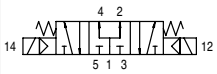
5/3 closed centres with external air pilot	034009	A1K170	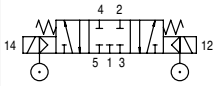
5/3 open centres with external air pilot	034010	A1K171	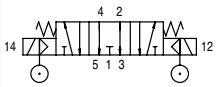
5/3 pressurized centres with external air pilot	034013	A1K172	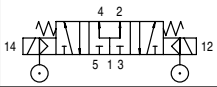



Technical data

Version		5/3 closed centres	5/3 open centres	5/3 pressurized centres	5/3 closed centres with external air pilot	5/3 open centres with external air pilot	5/3 pressurized centres with external air pilot
Code		034031	034033	034032	034009	034010	034013
Item		A1E170	A1E171	A1E172	A1K170	A1K171	A1K172
Size		1/8"					
Fluid		Compressed air with or without lubrication. Lubrication, if started, must be continued.					
Pressure range		2,5 ÷ 10 bar					
Minimum external air pressure		-			1,5 bar		
Temperature range		-10°C ÷ +60°C (standard) -25°C ÷ +60°C (BT)					
Plunger Ø		9 mm					
Orifice Ø		6.5 mm					
Flow at 6 bar with ΔP 1 bar		650 Nl/min.					
Mounting		In every position					
Manual override		Bistable					
Response time at 6 bar	Energizing	20 ms.					
	De-energizing	20 ms.					

Notes

Coils and connectors for standard versions to be ordered separately.
For coils type ASA12 and ASA2 see from page 2.315.1. For connectors type A122 e A182 see from page 2.318.1

For valves complete with ATEX coil and connector, in different classifications, see page 2.320.1

Standard dimensions

Type: **5/3 C.C.**
5/3 O.C.
5/3 P.C.

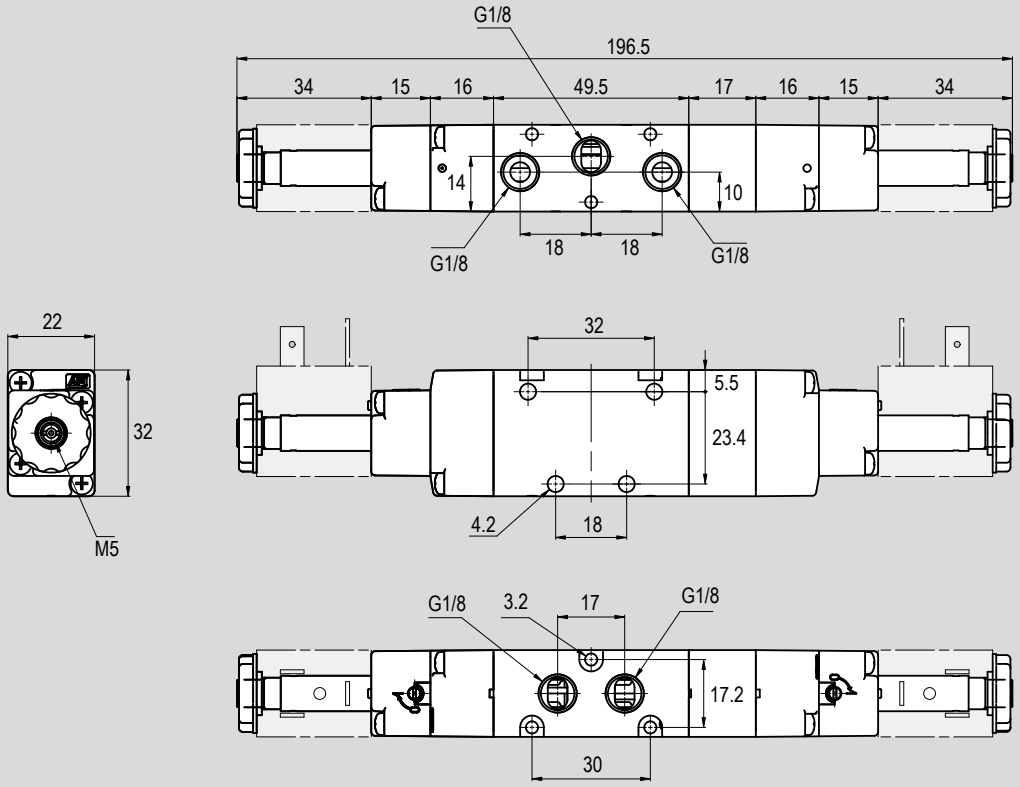

Version	Symbol	Code	Item
1/8" 5/3 closed centres	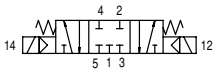	034031	A1E170
1/8" 5/3 open centres	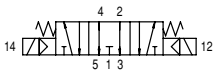	034033	A1E171
1/8" 5/3 pressurized centres	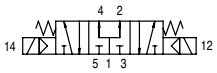	034032	A1E172

Standard dimensions

Type: **5/3 C.C. with external air pilot**
5/3 O.C. with external air pilot
5/3 P.C. with external air pilot

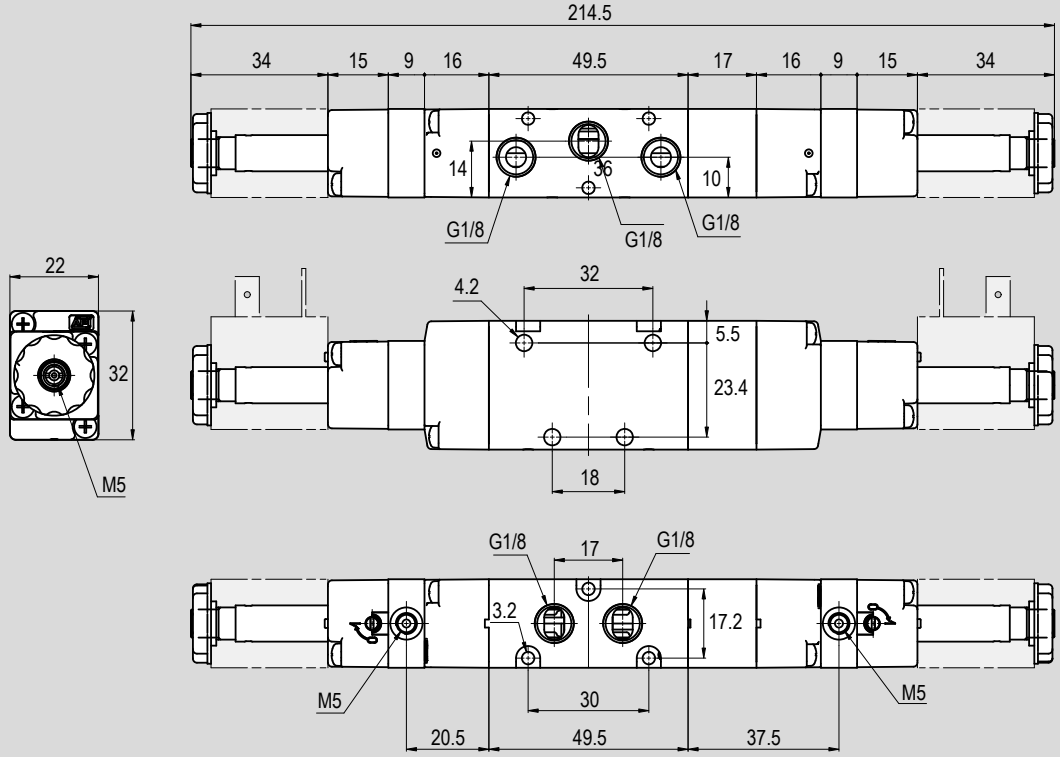

Version	Symbol	Code	Item
1/8" 5/3 closed centres with external air pilot	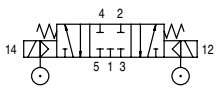	034009	A1K170
1/8" 5/3 open centres with external air pilot	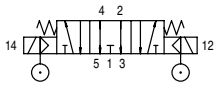	034010	A1K171
1/8" 5/3 pressurized centres with external air pilot	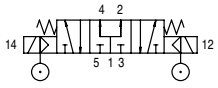	034013	A1K172

Notes

Solenoid operated valves series A1
1/4", 3/2 Solenoid/Spring

Main features

Version	Code	Item	Symbol
3/2 Normally closed	034025	A1E230	
3/2 Normally closed with external air pilot	034039	A1K230	
3/2 Normally open	034040	A1E231	

Technical data

Version		3/2 Normally closed	3/2 Normally closed with external air pilot	3/2 Normally open
Code		034025	034039	034040
Item		A1E230	A1K230	A1E231
Size		1/4"		
Fluid		Compressed air with or without lubrication. Lubrication, if started, must be continued.		
Pressure range		1,5 ÷ 10 bar		
Minimum external air pressure		-	1,5 bar	-
Temperature range		-10°C ÷ +60°C (standard) -25°C ÷ +60°C (BT)		
Plunger Ø		9 mm		
Orifice Ø		8 mm		
Flow at 6 bar with ΔP 1 bar		1.100 Nl/min.		
Mounting		In every position		
Manual override		Bistable		
Response time at 6 bar	Energizing	45 ms.		
	De-energizing	19 ms.		

Notes

Coils and connectors for standard versions to be ordered separately.
For coils type ASA12 and ASA2 see from page 2.315.1. For connectors type A122 e A182 see from page 2.318.1

For valves complete with ATEX coil and connector, in different classifications, see page 2.320.1

Standard dimensions

Type: **3/2 N.C.**
3/2 N.O.

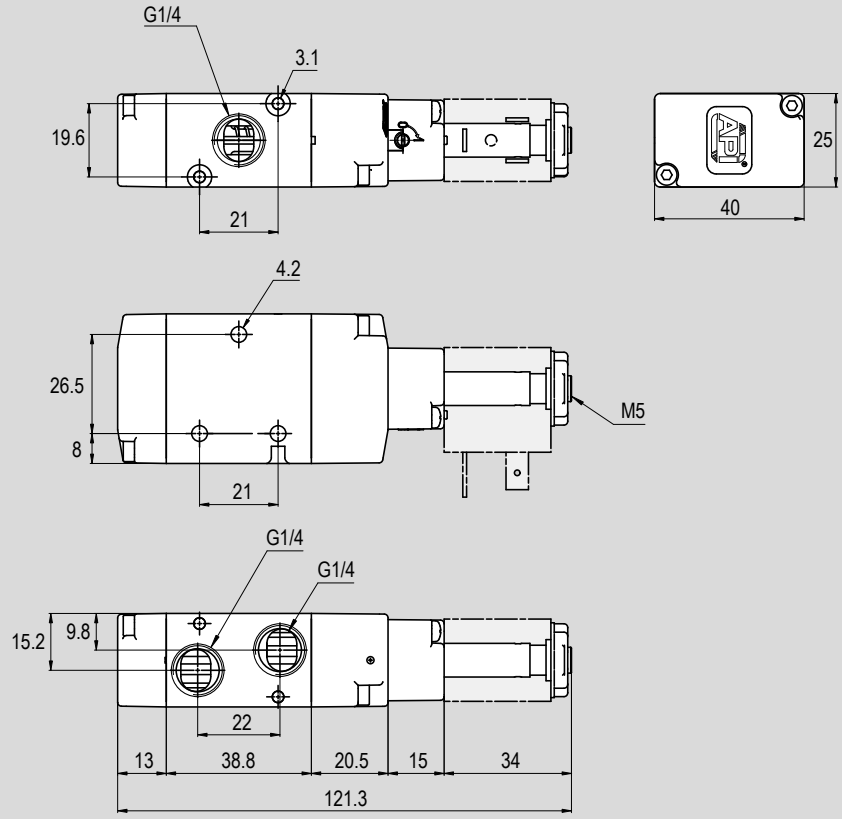

Version	Symbol	Code	Item
1/4" 3/2 Normally closed	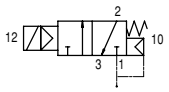	034025	A1E230
1/4" 3/2 Normally open	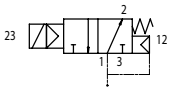	034040	A1E231

Standard dimensions

Type: **3/2 N.C. with external air pilot**

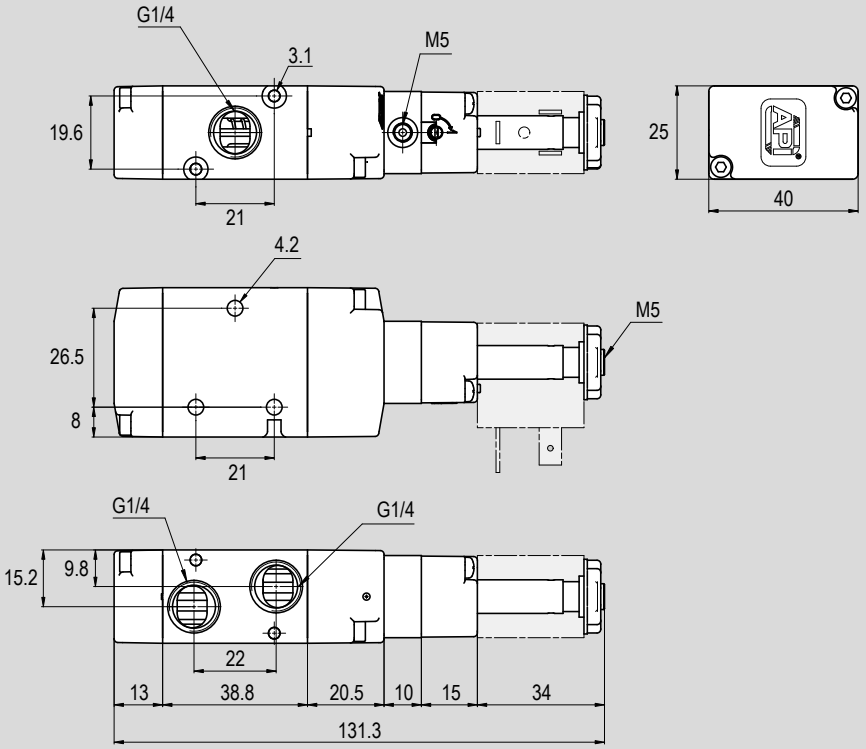

Version	Symbol	Code	Item
1/4" 3/2 Normally closed with external air pilot	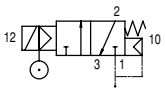	034039	A1K230

Main features

Version	Code	Item	Symbol
3/2 solenoid/solenoid	034024	A1E232	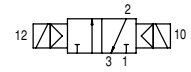
3/2 solenoid/solenoid with external air pilot	034023	A1K232	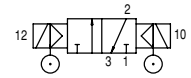



Technical data

Version		3/2 solenoid/solenoid	3/2 solenoid/solenoid with external air pilot
Code		034024	034023
Item		A1E232	A1K232
Size		1/4"	
Fluid		Compressed air with or without lubrication. Lubrication, if started, must be continued.	
Pressure range		1 ÷ 10 bar	
Minimum external air pressure		-	1,5 bar
Temperature range		-10°C ÷ +60°C (standard) -25°C ÷ +60°C (BT)	
Plunger Ø		9 mm	
Orifice Ø		8 mm	
Flow at 6 bar with ΔP 1 bar		1.100 Nl/min.	
Mounting		In every position	
Manual override		Bistable	
Response time at 6 bar	Energizing	21 ms.	
	De-energizing	21 ms.	

Notes

Coils and connectors for standard versions to be ordered separately.
For coils type ASA12 and ASA2 see from page 2.315.1. For connectors type A122 e A182 see from page 2.318.1

For valves complete with ATEX coil and connector, in different classifications, see page 2.320.1

Standard dimensions

Type: **3/2 solenoid/solenoid**

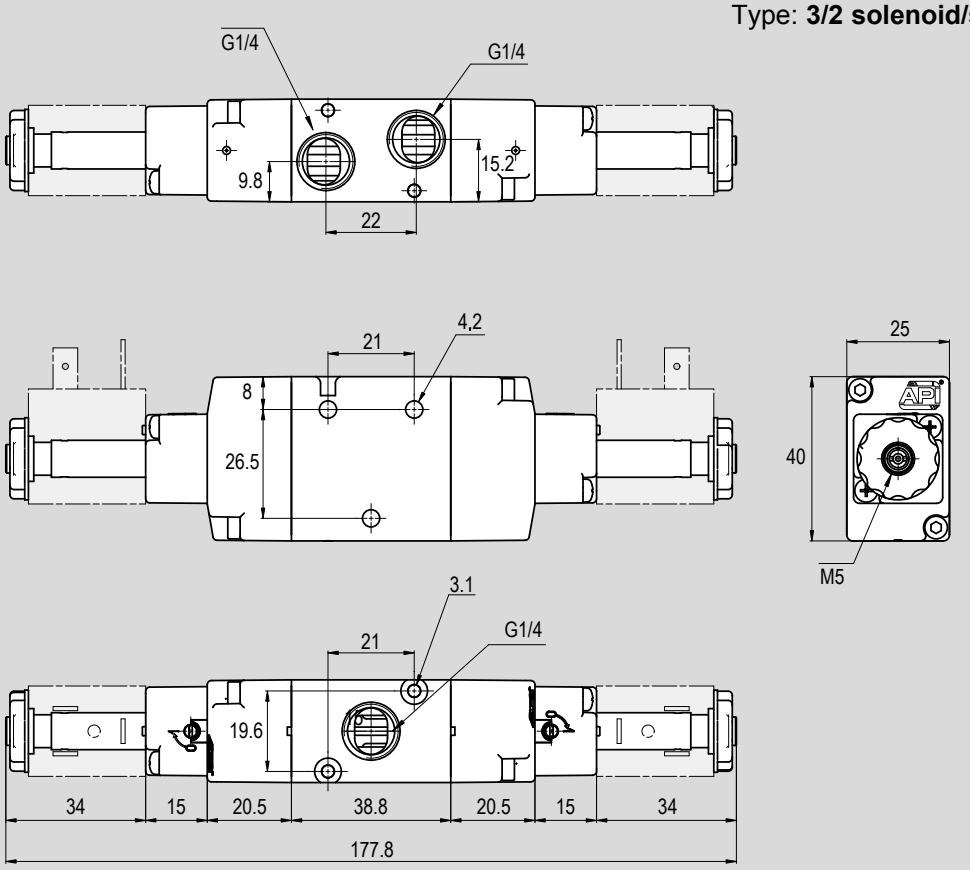

Version	Symbol	Code	Item
1/4" 3/2 solenoid/solenoid	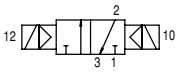	034024	A1E232

Standard dimensions

Type: **3/2 solenoid/solenoid with external air pilot**

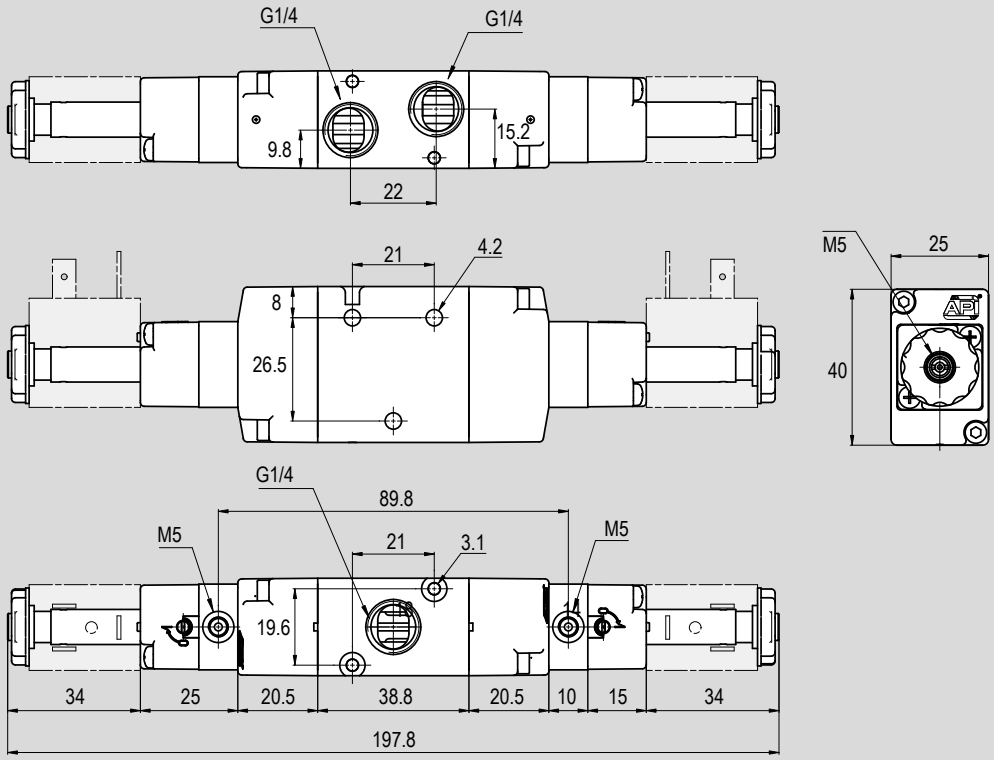

Version	Symbol	Code	Item
1/4" 3/2 solenoid/solenoid with external air pilot	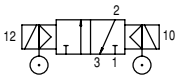	034023	A1K232

Solenoid operated valves series A1
1/4", 5/2 Solenoid/Spring

Main features

Version	Code	Item	Symbol
5/2 solenoid/spring	034111	A1E250	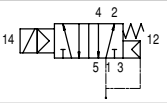
5/2 solenoid/spring with external air pilot	034035	A1K250	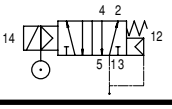



Technical data

Version		5/2 solenoid/spring	5/2 solenoid/spring with external air pilot
Code		034111	034035
Item		A1E250	A1K250
Size		1/4"	
Fluid		Compressed air with or without lubrication. Lubrication, if started, must be continued.	
Pressure range		1,5 ÷ 10 bar	
Minimum external air pressure		-	1,5 bar
Temperature range		-10°C ÷ +60°C (standard) -25°C ÷ +60°C (BT)	
Plunger Ø		9 mm	
Orifice Ø		8 mm	
Flow at 6 bar with ΔP 1 bar		1.100 Nl/min.	
Mounting		In every position	
Manual override		Bistable	
Response time at 6 bar	Energizing	45 ms.	
	De-energizing	19 ms.	

Notes

Coils and connectors for standard versions to be ordered separately.
For coils type ASA12 and ASA2 see from page 2.315.1. For connectors type A122 e A182 see from page 2.318.1

For valves complete with ATEX coil and connector, in different classifications, see page 2.320.1

Standard dimensions

Type: **5/2 solenoid/spring**

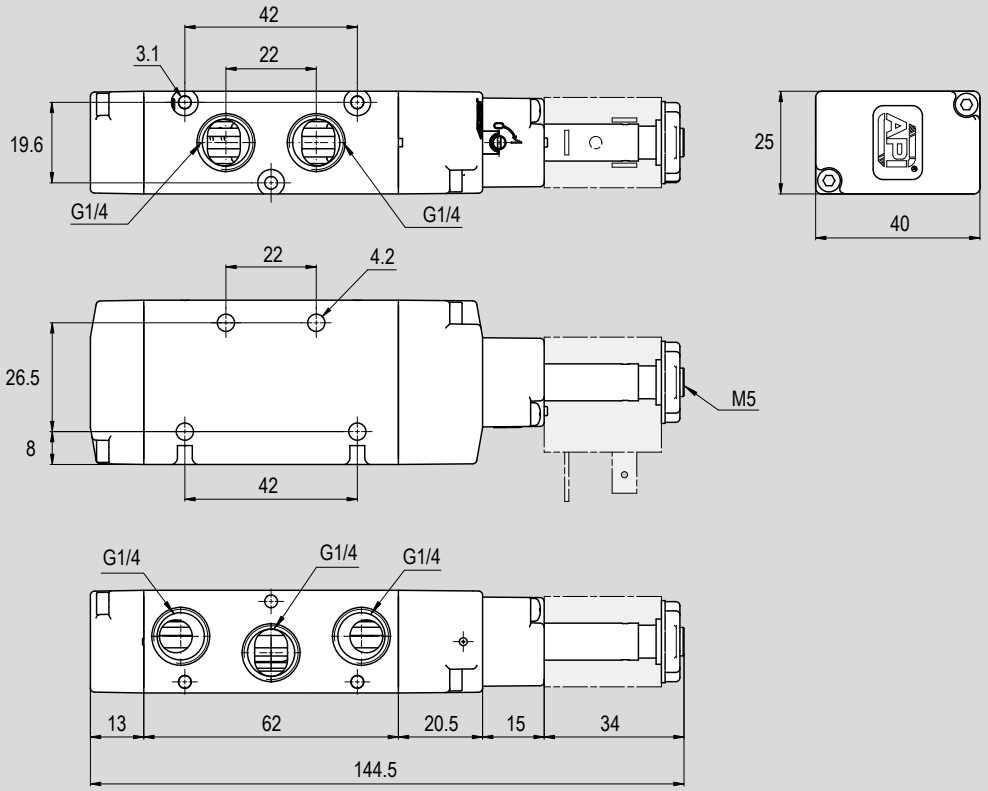

Version	Symbol	Code	Item
1/4" 5/2 solenoid/spring	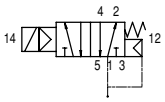	034111	A1E250

Standard dimensions

Type: **5/2 solenoid/spring with external air pilot**

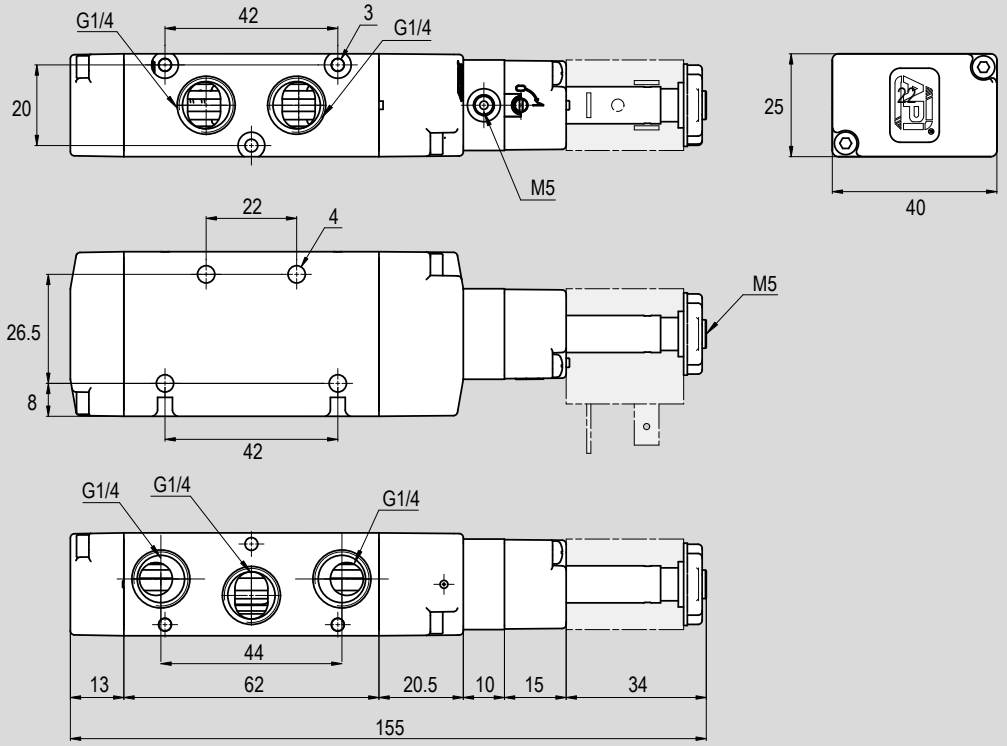

Version	Symbol	Code	Item
1/4" 5/2 solenoid/spring with external air pilot	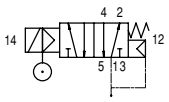	034035	A1K250

Solenoid operated valves series A1

1/4", 5/2 Solenoid/Solenoid

Main features

Version	Code	Item	Symbol
5/2 solenoid/solenoid	034121	A1E251	
5/2 solenoid/solenoid differential	034223	A1E252	
5/2 solenoid/solenoid with external air pilot	034034	A1K251	

Technical data

Version		5/2 solenoid/solenoid	5/2 solenoid/solenoid differential	5/2 solenoid/solenoid with external air pilot
Code		034121	034223	034034
Item		A1E251	A1E252	A1K251
Size		1/4"		
Fluid		Compressed air with or without lubrication. Lubrication, if started, must be continued.		
Pressure range		1 ÷ 10 bar		
Minimum external air pressure		-		1,5 bar
Temperature range		-10°C ÷ +60°C (standard) -25°C ÷ +60°C (BT)		
Plunger Ø		9 mm		
Orifice Ø		8 mm		
Flow at 6 bar with ΔP 1 bar		1.100 Nl/min.		
Mounting		In every position		
Manual override		Bistable		
Response time at 6 bar	Energizing	21 ms.		
	De-energizing	21 ms.		

Notes

Coils and connectors for standard versions to be ordered separately.
For coils type ASA12 and ASA2 see from page 2.315.1. For connectors type A122 e A182 see from page 2.318.1

For valves complete with ATEX coil and connector, in different classifications, see page 2.320.1

Standard dimensions

Type: **5/2 solenoid/solenoid**
5/2 sol./sol. differential

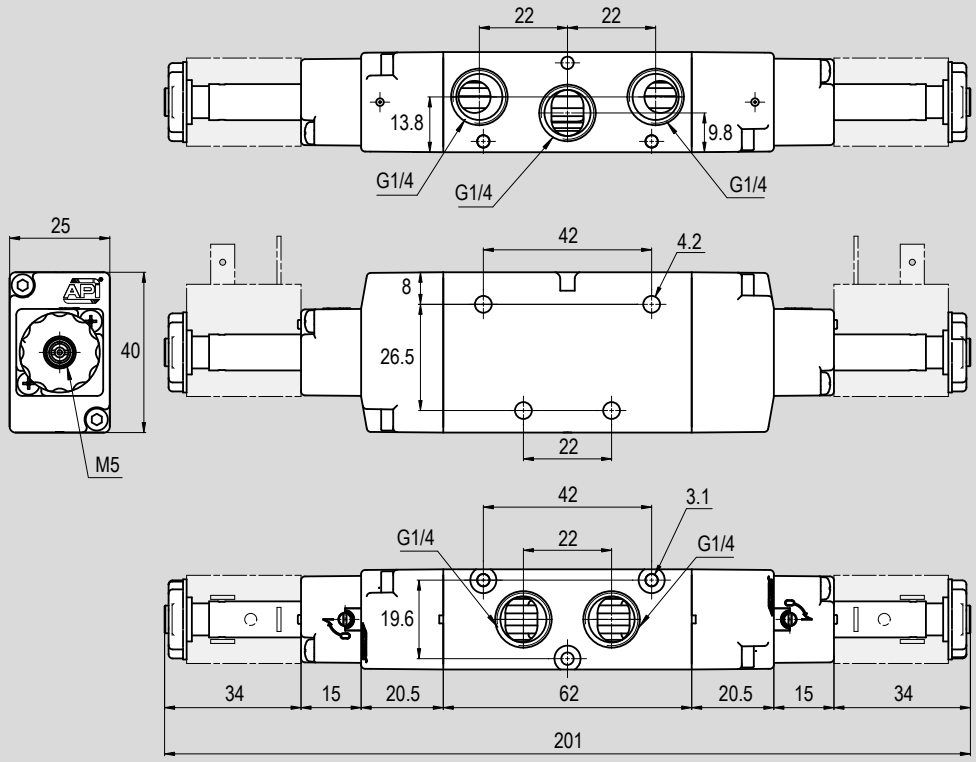

Version	Symbol	Code	Item
1/4" 5/2 solenoid/solenoid	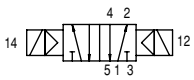	034121	A1E251
1/4" 5/2 solenoid/solenoid differential	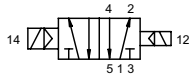	034223	A1E252

Standard dimensions

Type: **5/2 solenoid/solenoid with external air pilot**

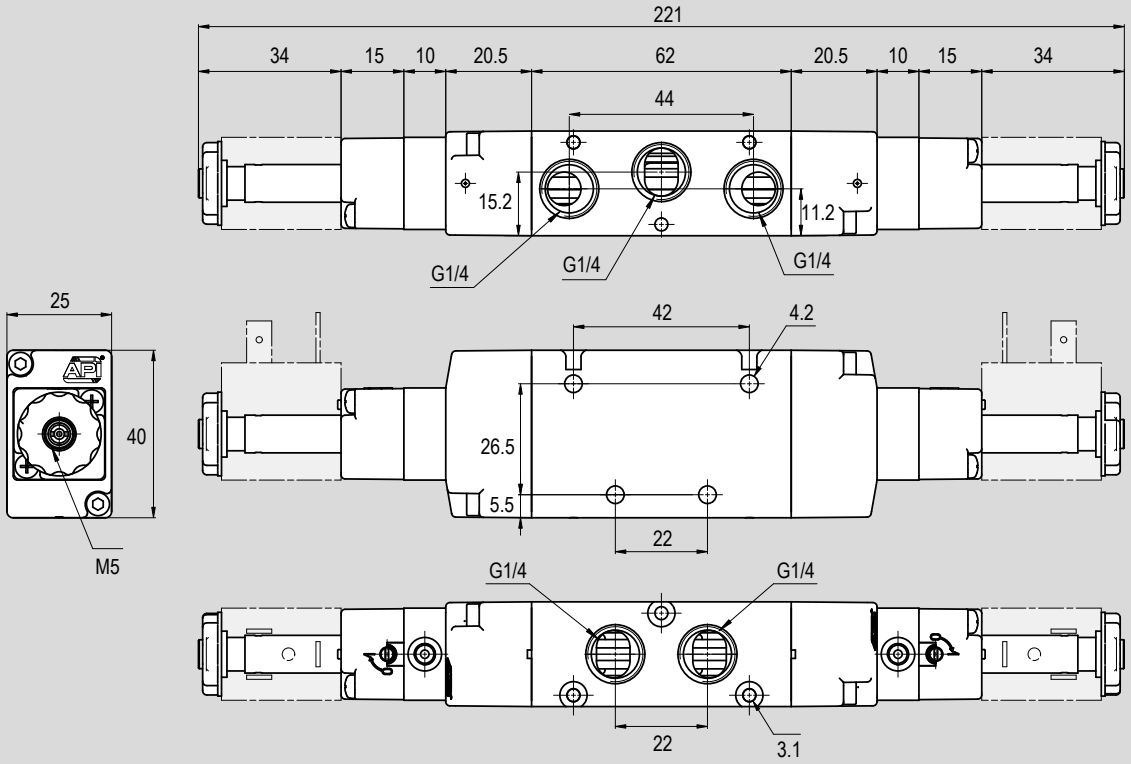

Version	Symbol	Code	Item
1/4" 5/2 solenoid/solenoid with external air pilot	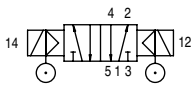	034034	A1K251

Solenoid operated valves series A1
1/4", 5/3

Main features

Version	Code	Item	Symbol
5/3 closed centres	034131	A1E270	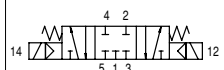
5/3 open centres	034133	A1E271	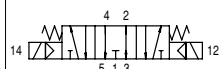
5/3 pressurized centres	034132	A1E272	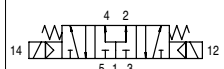
5/3 closed centres with external air pilot	034037	A1K270	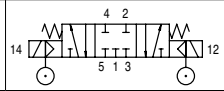
5/3 open centres with external air pilot	034038	A1K271	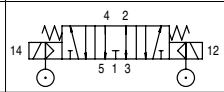
5/3 pressurized centres with external air pilot	034036	A1K272	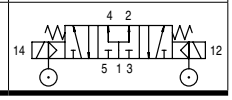



Technical data

Version		5/3 closed centres	5/3 open centres	5/3 pressurized centres	5/3 closed centres with external air pilot	5/3 open centres with external air pilot	5/3 pressurized centres with external air pilot
Code		034131	034133	034132	034037	034038	034036
Item		A1E270	A1E271	A1E272	A1K270	A1K271	A1K272
Size		1/4"					
Fluid		Compressed air with or without lubrication. Lubrication, if started, must be continued.					
Pressure range		2,5 ÷ 10 bar					
Minimum external air pressure		-			1,5 bar		
Temperature range		-10°C ÷ +60°C (standard) -25°C ÷ +60°C (BT)					
Plunger Ø		9 mm					
Orifice Ø		8 mm					
Flow at 6 bar with ΔP 1 bar		1.100 Nl/min.					
Mounting		In every position					
Manual override		Bistable					
Response time at 6 bar	Energizing	21 ms.					
	De-energizing	21 ms.					

Notes

Coils and connectors for standard versions to be ordered separately.
For coils type ASA12 and ASA2 see from page 2.315.1. For connectors type A122 e A182 see from page 2.318.1

For valves complete with ATEX coil and connector, in different classifications, see page 2.320.1

Standard dimensions

Type: **5/3 C.C.**
5/3 O.C.
5/3 P.C.

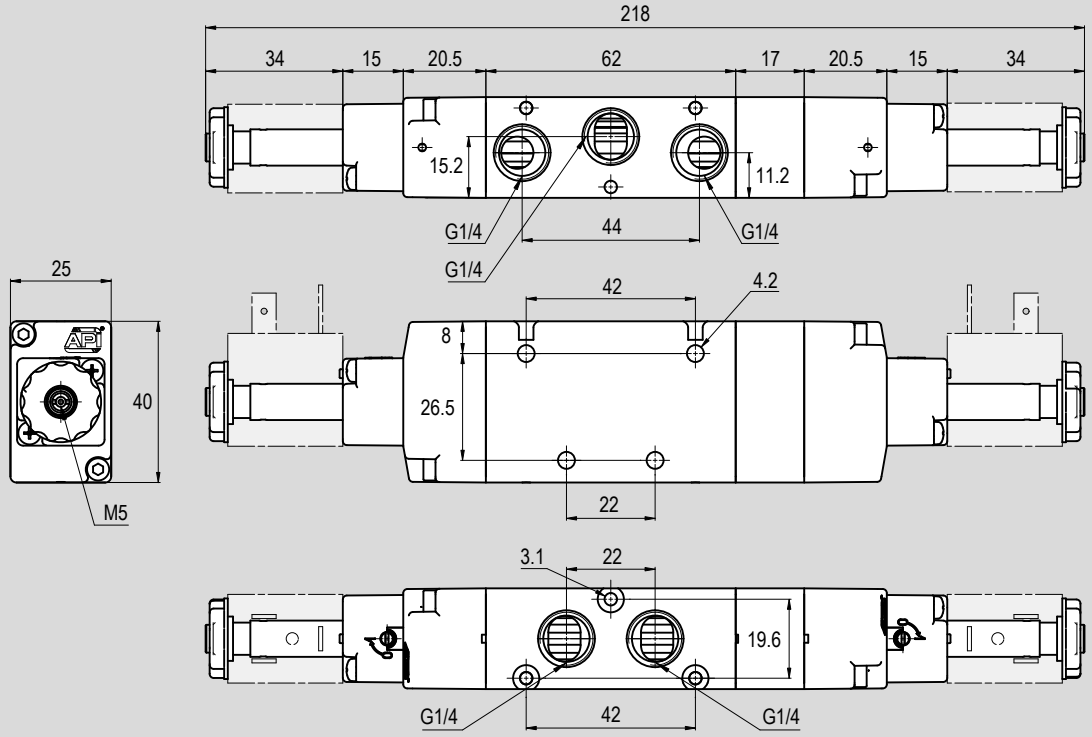

Version	Symbol	Code	Item
1/4" 5/3 closed centres	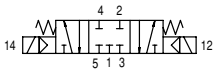	034131	A1E270
1/4" 5/3 open centres	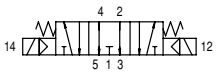	034133	A1E271
1/4" 5/3 pressurized centres	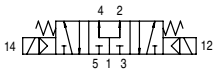	034132	A1E272

Standard dimensions

Type: **5/3 C.C. with external air pilot**
5/3 O.C. with external air pilot
5/3 P.C. with external air pilot

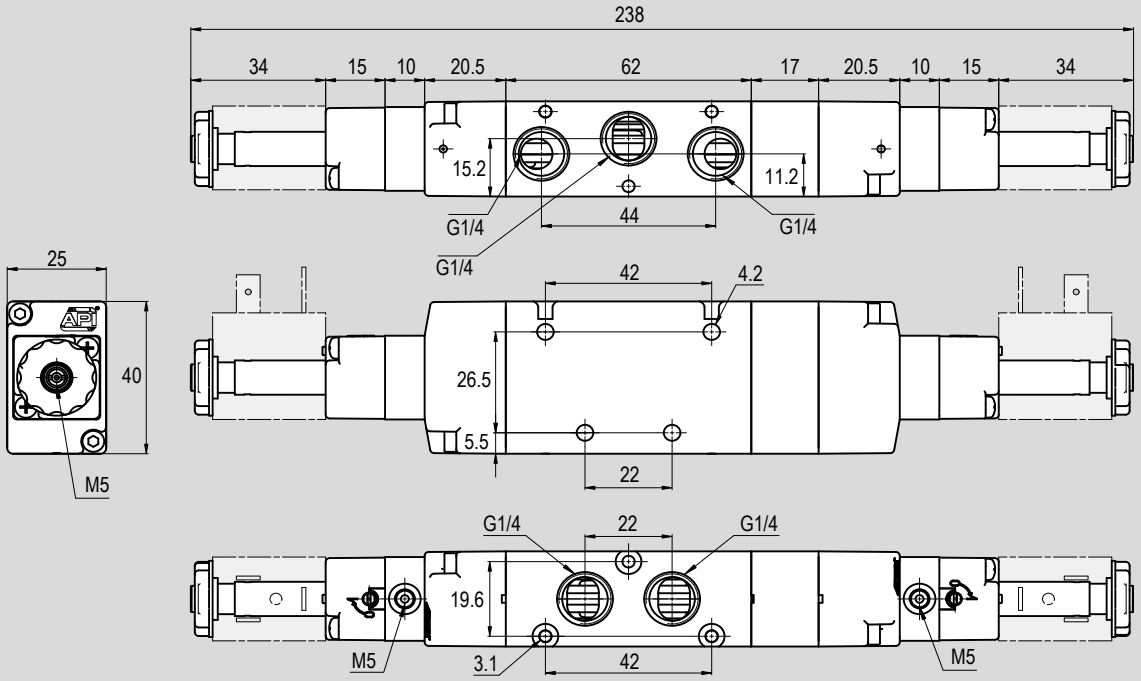

Version	Symbol	Code	Item
1/4" 5/3 closed centres with external air pilot	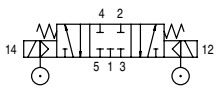	034037	A1K270
1/4" 5/3 open centres with external air pilot	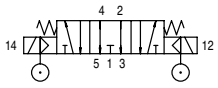	034038	A1K271
1/4" 5/3 pressurized centres with external air pilot	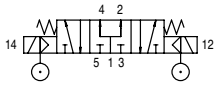	034036	A1K272

Notes

Solenoid operated valves series A1
1/2", 3/2 Solenoid/Spring

Main features

Version	Code	Item	Symbol
3/2 Normally closed	034113	A1E430	
3/2 Normally closed with external air pilot	034137	A1K430	
3/2 Normally open	034122	A1E431	

Technical data

Version		3/2 Normally closed	3/2 Normally closed with external air pilot	3/2 Normally open
Code		034113	034137	034122
Item		A1E430	A1K430	A1E431
Size		1/2"		
Fluid		Compressed air with or without lubrication. Lubrication, if started, must be continued.		
Pressure range		2,5 ÷ 10 bar		
Minimum external air pressure		-	2,5 bar	-
Temperature range		-10°C ÷ +60°C (standard) -25°C ÷ +60°C (BT)		
Plunger Ø		9 mm		
Orifice Ø		15 mm		
Flow at 6 bar with ΔP 1 bar		2.900 Nl/min.		
Mounting		In every position		
Manual override		Bistable		
Response time at 6 bar	Energizing	60 ms.		
	De-energizing	35 ms.		

Notes

Coils and connectors for standard versions to be ordered separately.
For coils type ASA12 and ASA2 see from page 2.315.1. For connectors type A122 e A182 see from page 2.318.1

For valves complete with ATEX coil and connector, in different classifications, see page 2.320.1

Standard dimensions

Type: **3/2 N.C.**
3/2 N.O.

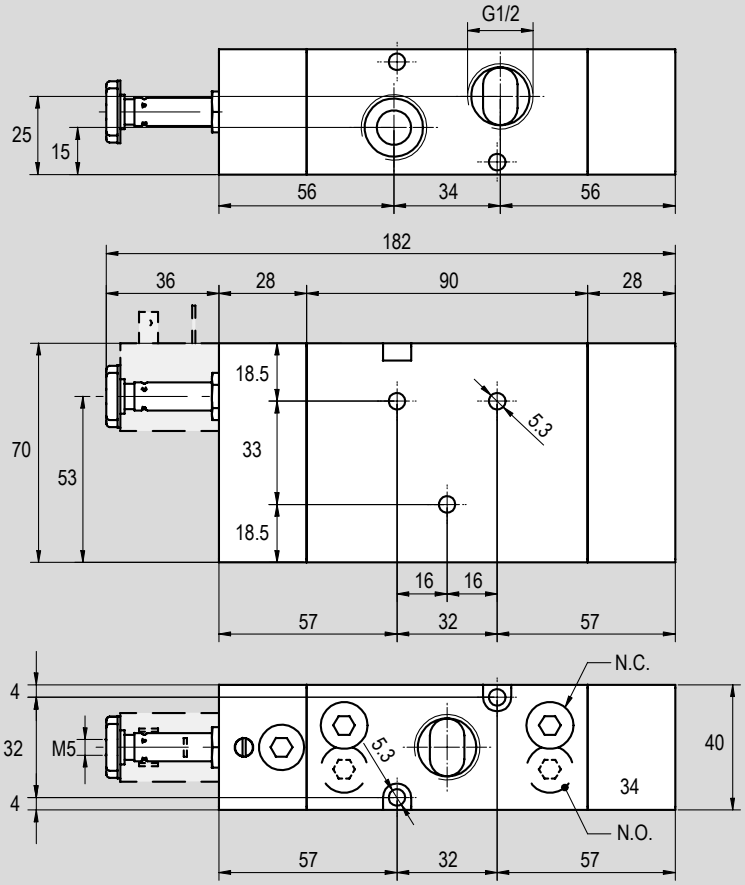

Type: **3/2 N.C. with external air pilot**

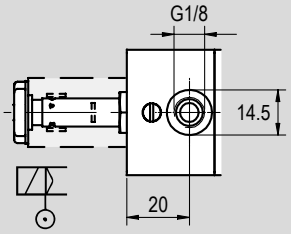

Version	Symbol	Code	Item
1/2" 3/2 Normally closed	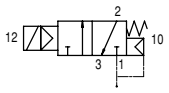	034113	A1E430
1/2" 3/2 Normally closed with external air pilot	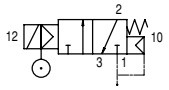	034137	A1K430
1/2" 3/2 Normally open	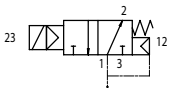	034122	A1E431

Solenoid operated valves series A1

1/2", 3/2 Solenoid/Solenoid

Main features

Version	Code	Item	Symbol
3/2 solenoid/solenoid	034123	A1E432	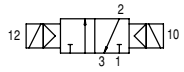
3/2 solenoid/solenoid with external air pilot	034158	A1K432	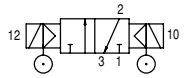



Technical data

Version		3/2 solenoid/solenoid	3/2 solenoid/solenoid with external air pilot
Code		034123	034158
Item		A1E432	A1K432
Size		1/2"	
Fluid		Compressed air with or without lubrication. Lubrication, if started, must be continued.	
Pressure range		2,5 ÷ 10 bar	
Minimum external air pressure		-	1 bar
Temperature range		-10°C ÷ +60°C (standard) -25°C ÷ +60°C (BT)	
Plunger Ø		9 mm	
Orifice Ø		15 mm	
Flow at 6 bar with ΔP 1 bar		2.900 Nl/min.	
Mounting		In every position	
Manual override		Bistable	
Response time at 6 bar	Energizing	30 ms.	
	De-energizing	30 ms.	

Notes

Coils and connectors for standard versions to be ordered separately.
For coils type ASA12 and ASA2 see from page 2.315.1. For connectors type A122 e A182 see from page 2.318.1

For valves complete with ATEX coil and connector, in different classifications, see page 2.320.1

Standard dimensions

Type: **3/2 solenoid/solenoid**

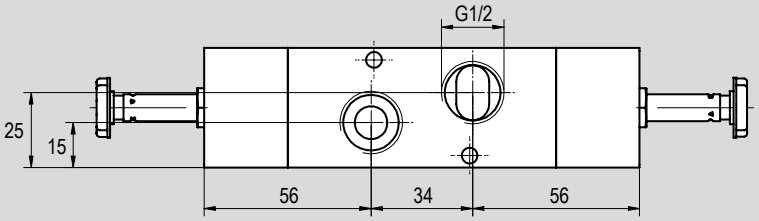

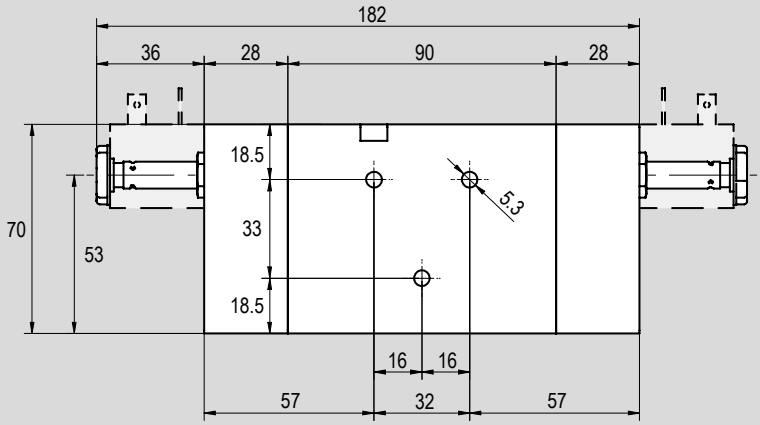

Type: **5/2 solenoid/solenoid with external air pilot**

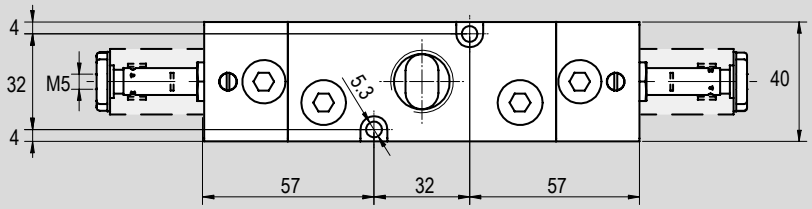

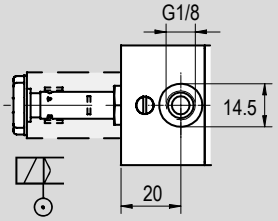

Version	Symbol	Code	Item
1/2" 3/2 solenoid/solenoid	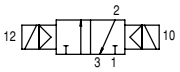	034123	A1E432
1/2" 3/2 solenoid/solenoid with external air pilot	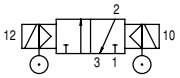	034158	A1K432

Solenoid operated valves series A1
1/2", 5/2 Solenoid/Spring

Main features

Version	Code	Item	Symbol
5/2 solenoid/spring	034114	A1E450	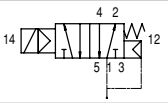
5/2 solenoid/spring with external air pilot	034138	A1K450	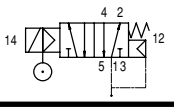



Technical data

Version		5/2 solenoid/spring	5/2 solenoid/spring with external air pilot
Code		034114	034138
Item		A1E450	A1K450
Size		1/2"	
Fluid		Compressed air with or without lubrication. Lubrication, if started, must be continued.	
Pressure range		2,5 ÷ 10 bar	
Minimum external air pressure		-	2,5 bar
Temperature range		-10°C ÷ +60°C (standard) -25°C ÷ +60°C (BT)	
Plunger Ø		9 mm	
Orifice Ø		15 mm	
Flow at 6 bar with ΔP 1 bar		2.900 Nl/min.	
Mounting		In every position	
Manual override		Bistable	
Response time at 6 bar	Energizing	60 ms.	
	De-energizing	35 ms.	

Notes

Coils and connectors for standard versions to be ordered separately.
For coils type ASA12 and ASA2 see from page 2.315.1. For connectors type A122 e A182 see from page 2.318.1

For valves complete with ATEX coil and connector, in different classifications, see page 2.320.1

Standard dimensions

Type: **5/2 solenoid/spring**

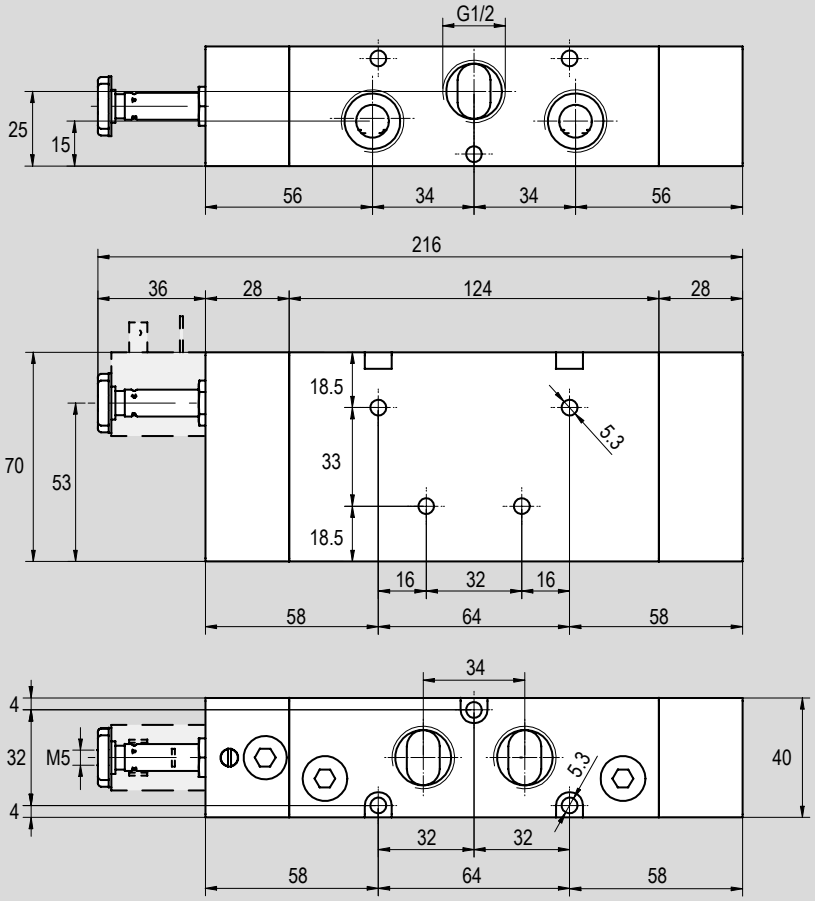

Type: **5/2 solenoid/spring with external air pilot**

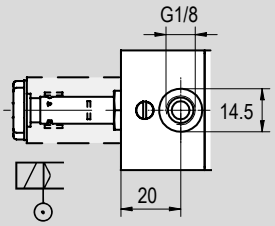

Version	Symbol	Code	Item
1/2" 5/2 solenoid/spring	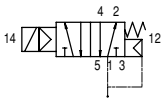	034114	A1E450
1/2" 5/2 solenoid/spring with external air pilot	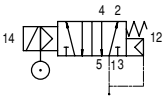	034138	A1K450

Solenoid operated valves series A1

1/2", 5/2 Solenoid/Solenoid

Main features

Version	Code	Item	Symbol
5/2 solenoid/solenoid	034115	A1E451	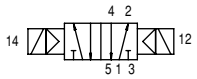
5/2 solenoid/solenoid differential	034139	A1E452	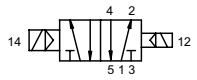
5/2 solenoid/solenoid with external air pilot	034140	A1K451	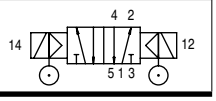



Technical data

Version		5/2 solenoid/solenoid	5/2 solenoid/solenoid differential	5/2 solenoid/solenoid with external air pilot
Code		034115	034139	034140
Item		A1E451	A1E452	A1K451
Size		1/2"		
Fluid		Compressed air with or without lubrication. Lubrication, if started, must be continued.		
Pressure range		2,5 ÷ 10 bar		
Minimum external air pressure		-		1 bar
Temperature range		-10°C ÷ +60°C (standard) -25°C ÷ +60°C (BT)		
Plunger Ø		9 mm		
Orifice Ø		15 mm		
Flow at 6 bar with ΔP 1 bar		2.900 Nl/min.		
Mounting		In every position		
Manual override		Bistable		
Response time at 6 bar	Energizing	30 ms.		
	De-energizing	30 ms.		

Notes

Coils and connectors for standard versions to be ordered separately.
For coils type ASA12 and ASA2 see from page 2.315.1. For connectors type A122 e A182 see from page 2.318.1

For valves complete with ATEX coil and connector, in different classifications, see page 2.320.1

Standard dimensions

Type: **5/2 solenoid/solenoid**
5/2 sol./sol. differential

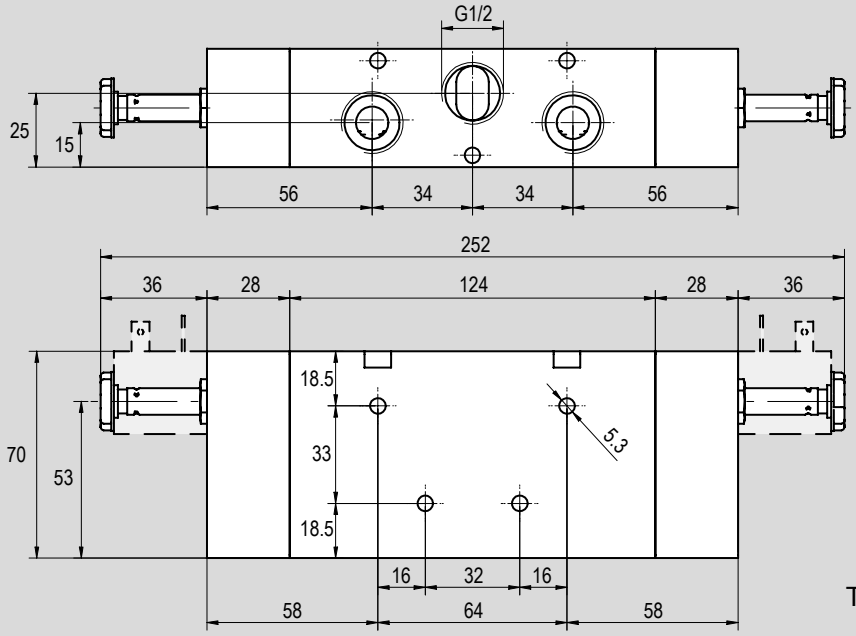

Type: **5/2 solenoid/solenoid**
with external air pilot

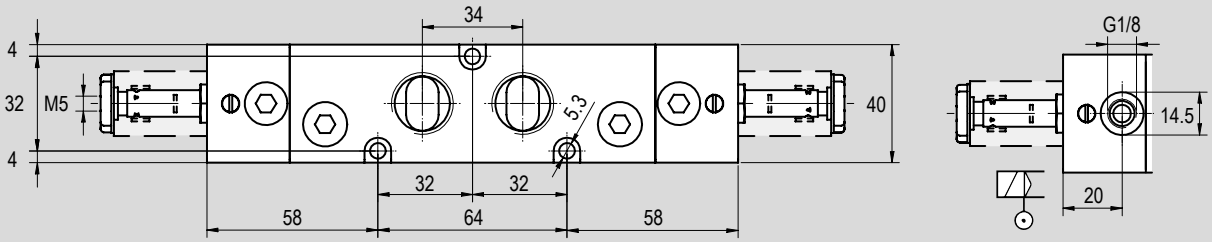

Version	Symbol	Code	Item
1/2" 5/2 solenoid/solenoid	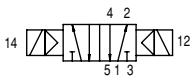	034115	A1E451
1/2" 5/2 solenoid/solenoid differential	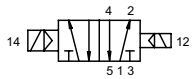	034139	A1E452
1/2" 5/2 solenoid/solenoid with external air pilot	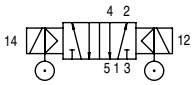	034140	A1K451

Solenoid operated valves series A1
1/2", 5/3

Main features

Version	Code	Item	Symbol
5/3 closed centres	034124	A1E470	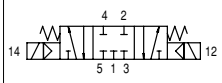
5/3 open centres	034125	A1E471	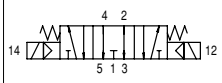
5/3 pressurized centres	034126	A1E472	
5/3 closed centres with external air pilot	034159	A1K470	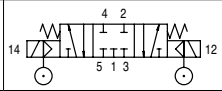
5/3 open centres with external air pilot	034160	A1K471	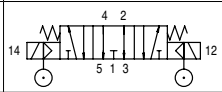
5/3 pressurized centres with external air pilot	034161	A1K472	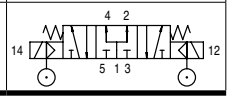



Technical data

Version		5/3 closed centres	5/3 open centres	5/3 pressurized centres	5/3 closed centres with external air pilot	5/3 open centres with external air pilot	5/3 pressurized centres with external air pilot
Code		034124	034125	034126	034159	034160	034161
Item		A1E470	A1E471	A1E472	A1K470	A1K471	A1K472
Size		1/2"					
Fluid		Compressed air with or without lubrication. Lubrication, if started, must be continued.					
Pressure range		2,5 ÷ 10 bar					
Minimum external air pressure		-			2,5 bar		
Temperature range		-10°C ÷ +60°C (standard) -25°C ÷ +60°C (BT)					
Plunger Ø		9 mm					
Orifice Ø		15 mm					
Flow at 6 bar with ΔP 1 bar		2.900 Nl/min.					
Mounting		In every position					
Manual override		Bistable					
Response time at 6 bar	Energizing	30 ms.					
	De-energizing	30 ms.					

Notes

Coils and connectors for standard versions to be ordered separately.
For coils type ASA12 and ASA2 see from page 2.315.1. For connectors type A122 e A182 see from page 2.318.1

For valves complete with ATEX coil and connector, in different classifications, see page 2.320.1

Standard dimensions

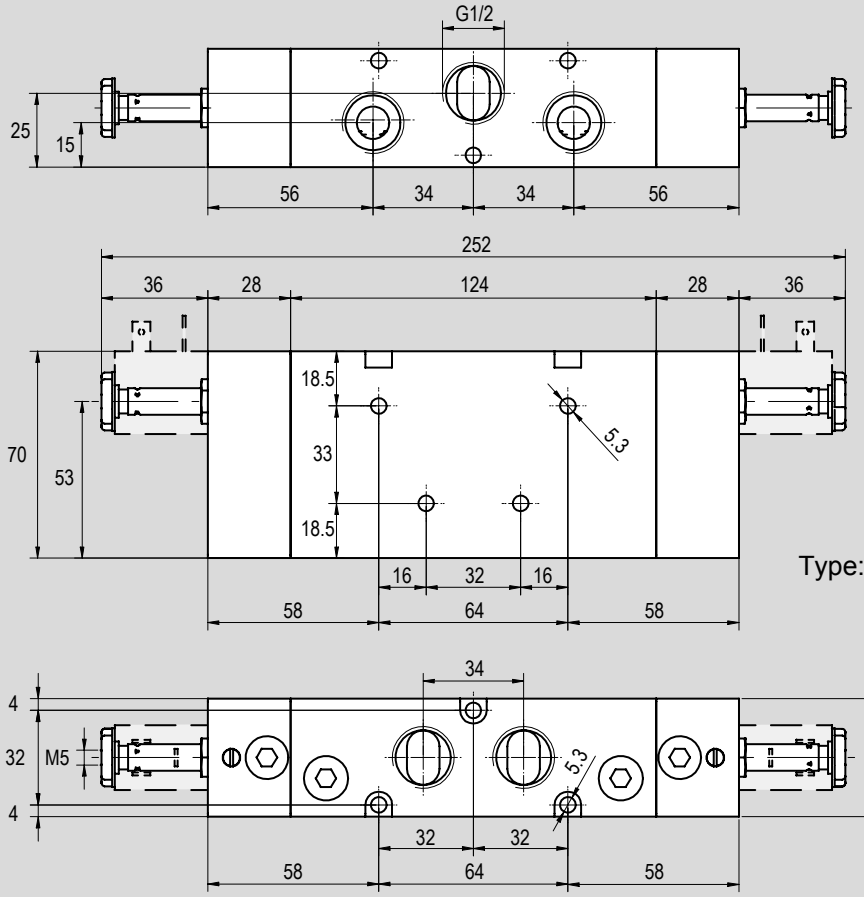

Type: **5/3 C.C.**
5/3 O.C.
5/3 P.C.

Type: **5/3 C.C. with external air pilot**
5/3 O.C. with external air pilot
5/3 P.C. with external air pilot

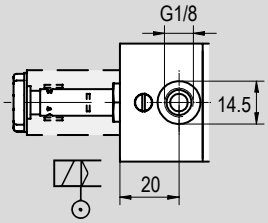

Version	Symbol	Code	Item
1/2" 5/3 closed centres	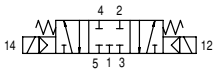	034124	A1E470
1/2" 5/3 open centres	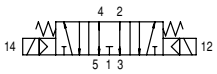	034125	A1E471
1/2" 5/3 pressurized centres	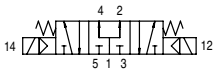	034126	A1E472
1/2" 5/3 closed centres with external air pilot	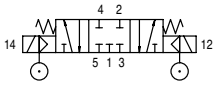	034159	A1K470
1/2" 5/3 open centres with external air pilot	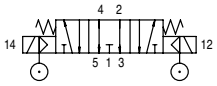	034160	A1K471
1/2" 5/3 pressurized centres with external air pilot	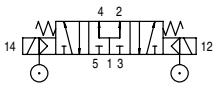	034161	A1K472

Sub-bases 1/8" A1B1..



Positions	Code	Item	Matching*
2	034041	A1B102	1/8"
3	034042	A1B103	
4	034043	A1B104	
5	034044	A1B105	
6	034045	A1B106	
7	034046	A1B107	
8	034047	A1B108	
9	034048	A1B109	
10	034049	A1B110	

*Note: for mounting valves with coils type ASA2 and ASA2/ATEX (size 30mm) require the sub-base option P32, see page 2.305.3

Sub-bases 1/4" A1B2..



Positions	Code	Item	Matching*
2	034141	A1B202	1/4"
3	034142	A1B203	
4	034143	A1B204	
5	034144	A1B205	
6	034145	A1B206	
7	034146	A1B207	
8	034147	A1B208	
9	034148	A1B209	
10	034149	A1B210	

*Note: for mounting valves with coils type ASA2 and ASA2/ATEX (size 30mm) require the sub-base option P32, see page 2.305.3

Closing plates for sub-bases A1C..



Code	Item	Matching
034050	A1C1	A1B1 (1/8")
034150	A1C2	A1B2 (1/4")

Plugs for sub-bases A1T..



Code	Item	Matching
034051	A1T1	A1B1 (1/8")
034151	A1T2	A1B2 (1/4")

Coils ASA12..



Voltage	Code	Item	Matching
12V DC	032100	ASA1201200	1/8" 1/4" 1/2"
12V AC	032101	ASA1201250	
24V DC	032102	ASA1202400	
24V AC	032103	ASA1202450	
48V AC	032104	ASA1204850	
110V AC	032105	ASA1211050	
230V AC	032106	ASA1223050	

Coils ASA2..



Voltage	Code	Item	Matching
12V DC	032109	ASA201200	1/8" 1/4" 1/2"
12V AC	032110	ASA201250	
24V DC	032111	ASA202400	
24V AC	032112	ASA202450	
48V AC	032113	ASA204850	
110V AC	032114	ASA211050	
230V AC	032115	ASA223050	

For mounting on sub-bases require the sub-base option P32, see pag 2.305.3

Connectors A122..*



Code	Item	Description
032118	A12209N	Black standard
033521	A12209NK	Black standard cabled
032204	A12209T1	LED+VDR transparent 24VAC-DC
032205	A12209T2	LED+VDR transparent 115VAC-DC
032206	A12209T3	LED+VDR transparent 230VAC-DC
033522	A12209N1K	LED+VDR black cabled 24VAC-DC
033523	A12209N2K	LED+VDR black cabled 115VAC-DC
033524	A12209N3K	LED+VDR black cabled 230VAC-DC

* For coils type ASA12

Connectors A182..**



Code	Item	Description
032119	A18209N	Black standard
033531	A18209NK	Black standard cabled
032207	A18209T1	LED+VDR transparent 24VAC-DC
032208	A18209T2	LED+VDR transparent 115VAC-DC
032209	A18209T3	LED+VDR transparent 230VAC-DC
033532	A18209N1K	LED+VDR black cabled 24VAC-DC
033533	A18209N2K	LED+VDR black cabled 115VAC-DC
033534	A18209N3K	LED+VDR black cabled 230VAC-DC

** For coils type ASA2

Plate for valves PSV..



For valve (5/2-5/3) size	Code	Item	Matching with cylinder Ø mm
1/8" - 1/4"	071458	PSV/A1/AMA-32-40	32-40
	071459	PSV/A1/AMA-50-63	50-63
1/8" - 1/4" - 1/2"	071460	PSV/A1/AMA-80-100-125	80÷125
1/4" - 1/2"	070822	PSV/A1/AMT-160-200	160-200

AIR OPERATED
valves Series A1



Find out our
key products

- **Solution for most applications**
- **Easy and intuitive choice**
- **Excellent value for money**
- **Wide availability**
- **Fast delivery**

Features and certifications

Spool valves, with static seals, high flow, for panel or sub-base mounting. Available in sizes 1/8", 1/4" and 1/2", air operated, with functions: 3/2 pilot/spring normally closed, 3/2 pilot/spring normally open, 3/2 pilot/pilot and pilot/pilot differential (only for size 1/8" and 1/4"), 5/2 pilot/spring, 5/2 pilot/pilot and pilot/pilot differential, 5/3 with open centres, closed centres, pressurized centres and closed centres differential (only for size 1/8").
Supplied as standard in compliance to Reach and RoHS directives, and SIL certified.
On request the valve body can be supplied according to 2014/34/EU ATEX Directive, classification Ex h.

Series A1 1/8" 3/2 Pilot/Spring from page 2.31.10



Series of spool valves, with static seals, high flow, for panel or sub-base mounting. Available in size 1/8", 3/2 pilot/spring normally closed and 3/2 pilot/spring normally open, air operated.

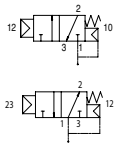

Series A1 1/8" 3/2 Pilot/Pilot from page 2.31.30



Series of spool valves, with static seals, high flow, for panel or sub-base mounting. Available in size 1/8", 3/2 pilot/pilot and 3/2 pilot/pilot differential, air operated.

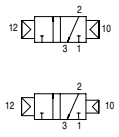

Series A1 1/8" 5/2 Pilot/Spring from page 2.31.50



Series of spool valves, with static seals, high flow, for panel or sub-base mounting. Available in size 1/8", 5/2 pilot/spring, air operated.

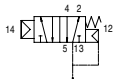

Series A1 1/8" 5/2 Pilot/Pilot from page 2.31.70



Series of spool valves, with static seals, high flow, for panel or sub-base mounting. Available in size 1/8", 5/2 pilot/pilot and 5/2 pilot/pilot differential, air operated.

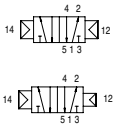

Series A1 1/8" 5/3 from page 2.31.90



Series of spool valves, with static seals, high flow, for panel or sub-base mounting. Available in size 1/8", 5/3 closed centres, 5/3 open centres, 5/3 pressurized centres and 5/3 closed centres differential, air operated.

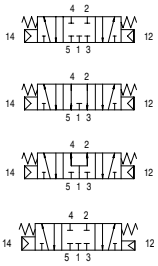

Series A1 1/4" 3/2 Pilot/Spring

from page 2.33.10



Series of spool valves, with static seals, high flow, for panel or sub-base mounting.
Available in size 1/4", 3/2 pilot/spring normally closed and 3/2 pilot/spring normally open, air operated.

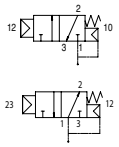

Series A1 1/4" 3/2 Pilot/Pilot

from page 2.33.30



Series of spool valves, with static seals, high flow, for panel or sub-base mounting.
Available in size 1/4", 3/2 pilot/pilot and 3/2 pilot/pilot differential, air operated.

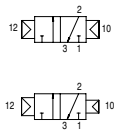

Series A1 1/4" 5/2 Pilot/Spring

from page 2.33.50



Series of spool valves, with static seals, high flow, for panel or sub-base mounting.
Available in size 1/4", 5/2 pilot/spring, air operated.

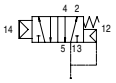

Series A1 1/4" 5/2 Pilot/Pilot

from page 2.33.70



Series of spool valves, with static seals, high flow, for panel or sub-base mounting.
Available in size 1/4", 5/2 pilot/pilot and 5/2 pilot/pilot differential, air operated.

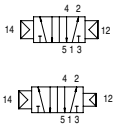

Series A1 1/4" 5/3

from page 2.33.90



Series of spool valves, with static seals, high flow, for panel or sub-base mounting.
Available in size 1/4", 5/3 closed centres, 5/3 open centres and 5/3 pressurized centres, air operated.

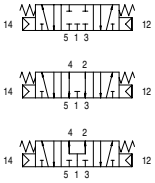

Series A1 1/2" 3/2 Pilot/Spring

from page 2.35.10



Series of spool valves, with static seals, high flow, for panel mounting with screws. Available in size 1/2", 3/2 pilot/spring normally closed and 3/2 pilot/spring normally open, air operated.

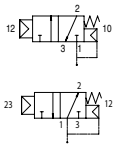

Series A1 1/2" 3/2 Pilot/Pilot

from page 2.35.30



Series of spool valves, with static seals, high flow, for panel mounting with screws. Available in size 1/2", 3/2 pilot/pilot, air operated

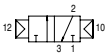

Series A1 1/2" 5/2 Pilot/Spring

from page 2.35.50



Series of spool valves, with static seals, high flow, for panel mounting with screws. Available in size 1/2", 5/2 pilot/spring, air operated.

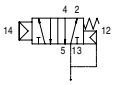

Series A1 1/2" 5/2 Pilot/Pilot

from page 2.35.70



Series of spool valves, with static seals, high flow, for panel mounting with screws. Available in size 1/2", 5/2 pilot/pilot and 5/2 pilot/pilot differential, air operated.

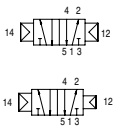

Series A1 1/2" 5/3

from page 2.35.70



Series of spool valves, with static seals, high flow, for panel mounting with screws. Available in size 1/2", 5/3 closed centres, 5/3 open centres and 5/3 pressurized centres, air operated.

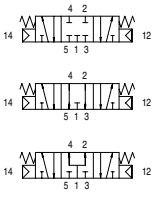

Options

Description		Symbol	Suffix
Low temperatures seals	-25°C ÷ +60°C		**BT**
ATEX valve body			**/ATEX**
Special versions on request			**/S**

The options, when this is possible, can be combined with each other. For options matching see the table below; For code key see from page 2.30.6

Options matching

Series	Size	Function		Standard options matching	
				BT	**/ATEX**
A1	1/8"	3/2	Pilot/Spring	●	●
			Pilot/Pilot	●	●
		5/2	Pilot/Spring	●	●
			Pilot/Pilot	●	●
		5/3		●	●
	1/4"	3/2	Pilot/Spring	●	●
			Pilot/Pilot	●	●
		5/2	Pilot/Spring	●	●
			Pilot/Pilot	●	●
		5/3		●	●
	1/2"	3/2	Pilot/Spring	●	●
			Pilot/Pilot	●	●
		5/2	Pilot/Spring	●	●
			Pilot/Pilot	●	●
		5/3		●	●

Key

● allowed matching; - not allowed matching

Code key

Series	Actuation	Size	Function	Options	/	ATEX valve body
A1	**P**	**2**	**50**		**/**	

Series
- A1

Actuation
- P = Pneumatic

Size
- 1 = 1/8"
- 2 = 1/4"
- 4 = 1/2"

Function
- 30 = 3/2 Normally closed
- 31 = 3/2 Normally open
- 32 = 3/2 Pilot/Pilot
- 33 (1) = 3/2 Pilot/Pilot differential
- 50 = 5/2 Pilot/Spring
- 51 = 5/2 Pilot/Pilot
- 52 = 5/2 Pilot/Pilot differential
- 70 = 5/3 Closed Centres
- 71 = 5/3 Open Centres
- 72 = 5/3 Pressurized Centres
- 73 (2) = 5/3 Closed Centres differential

Options
- BT = Low temperatures seals

ATEX valve body

ATEX*	CE Ex II 2G Ex h IIB T5 Gb II 2D Ex h IIIC T100°C Db
ATEX**	CE Ex II 2G Ex h IIC T5 Gb II 2D Ex h IIIC T100°C Db

* For size 1/8" e 1/4"
** For size 1/2"

How to order

Series	Actuation	Size	Function	Option
A1	**P**	**2**	**50**	**-**

Notes

Options in the same grid are alternative to each others.

(1) Only for size 1/8" and 1/4".

(2) Only for size 1/8".

For further information on options and their matching, see page 2.30.5.

For further information on the ATEX 2014/34/EU Directive, on classifications and protections, see from page III.1

Standard materials

Size: **1/8"**
1/4"

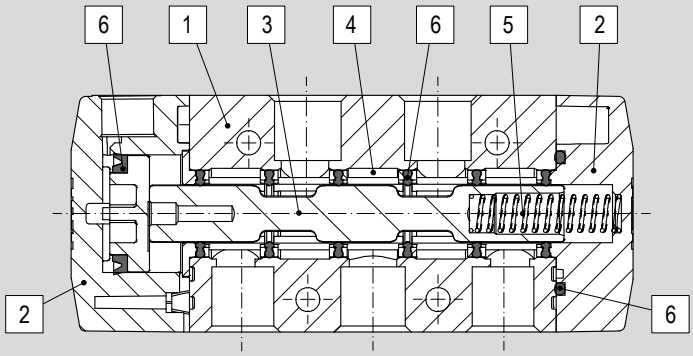

Size: **1/2"**

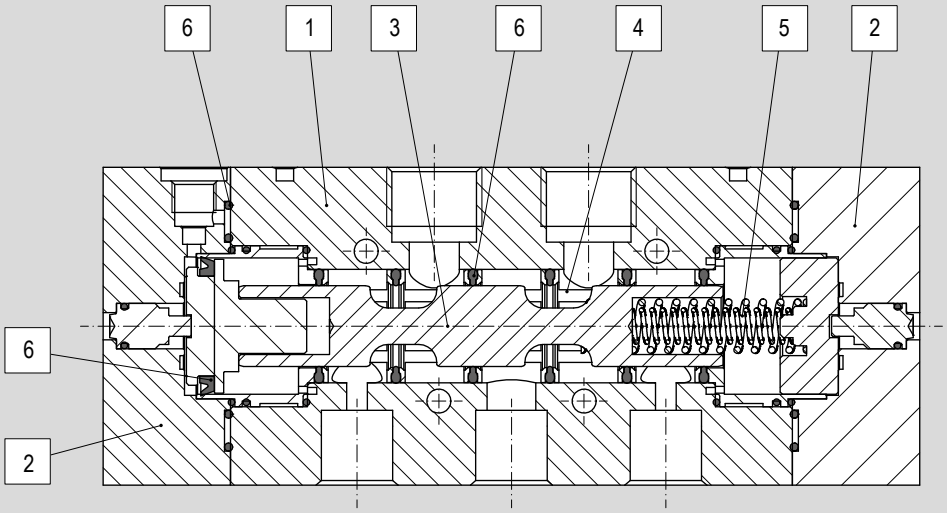

Position	Description	Material		
		1/8"	1/4"	1/2"
1	Body	Die-cast painted aluminium		Anodized aluminium
2	Covers	Tecnopolymer		Anodized aluminium
3	Spool	Hard anodized aluminium		
4	Distancers	Tecnopolymer		
5	Spring	Spring steel		
6	Seals	HNBR		

Accessories

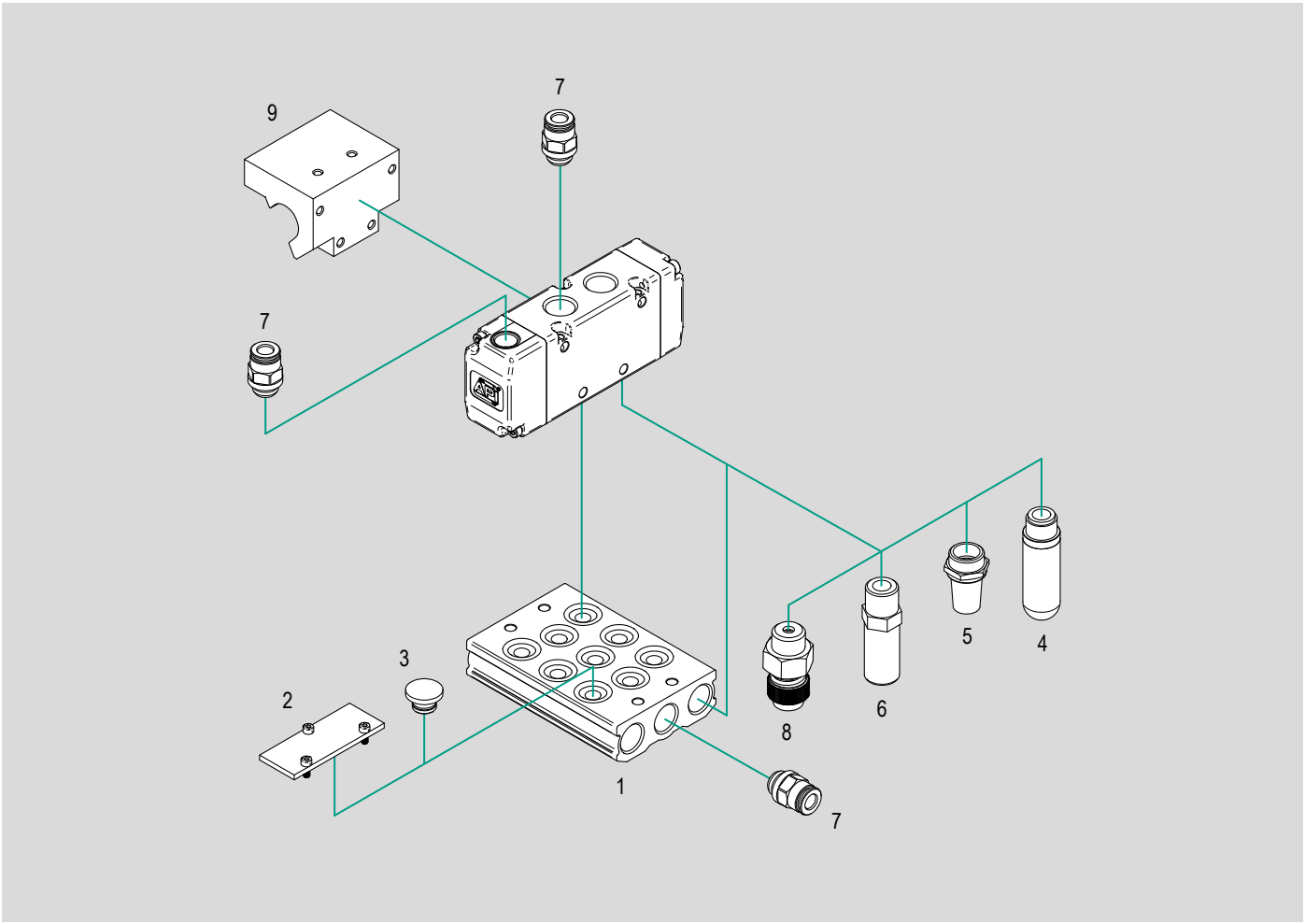

N.	Item	Description	Compliance	Matching			Code key page	Data sheet page
				1/8"	1/4"	1/2"		
1	A1B..	Sub-bases	-	●	●	–	2.37.1	2.38.1
2	A1C..	Closing plates for sub-bases	-	●	●	–		2.38.30
3	A1T..	Plugs for sub-bases	-	●	●	–		
4	AS..	Plastic silencers	-	●	●	●	4.151.10	
	SP..			●	●	●	4.151.20	
5	A..	Sintered silencers	-	●	●	●	4.153.10	
6	M..	Metal silencers	-	●	●	●	4.155.10	
7	R..	Push-in fittings	UNI ISO 228/1 UNI ISO7/1 ISO R/232	●	●	●	4.2.1	
8	A..	Silenced exhaust restrictors	-	●	●	●	4.97.1	
9	PSV..	Plate for ISO cylinders	ISO15552	●	●	●	2.37.1	2.39.1

Key
● matching accessory; – not matching accessory

Air operated valves series A1

1/8", 3/2 Pilot/Spring

Main features

Version	Code	Item	Symbol
3/2 Normally closed	034014	A1P130	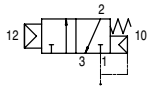
3/2 Normally open	034015	A1P131	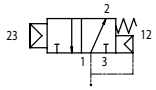



Technical data

Version	3/2 Normally closed	3/2 Normally open
Code	034014	034015
Item	A1P130	A1P131
Size	1/8"	
Fluid	Compressed air with or without lubrication. Lubrication, if started, must be continued.	
Pressure range	1,5 ÷ 10 bar	
Temperature range	-10°C ÷ +60°C (standard) -25°C ÷ +60°C (BT)	
Orifice Ø	6.5 mm	
Flow at 6 bar with ΔP 1 bar	650 Nl/min.	
Mounting	In every position	

Standard dimensions

Type: **3/2 N.C.**
3/2 N.O.

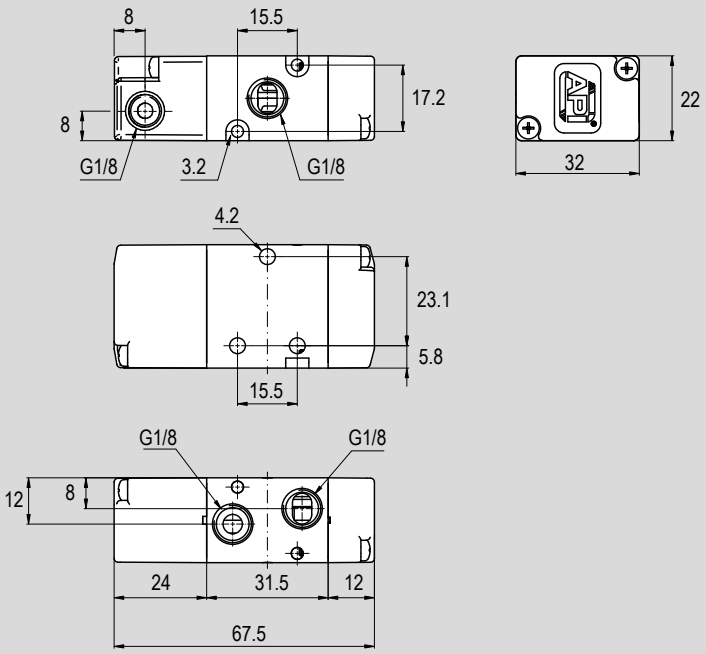

Version	Symbol	Code	Item
1/8" 3/2 Normally closed	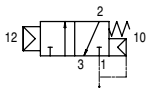	034014	A1P130
1/8" 3/2 Normally open	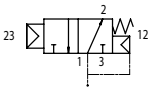	034015	A1P131

Air operated valves series A1

1/8", 3/2 Pilot/Pilot

Main features

Version	Code	Item	Symbol
3/2 pilot/pilot	034016	A1P132	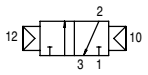
3/2 pilot/pilot differential	034017	A1P133	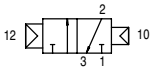



Technical data

Version	3/2 pilot/pilot	3/2 pilot/pilot differential
Code	034016	034017
Item	A1P132	A1P133
Size	1/8"	
Fluid	Compressed air with or without lubrication. Lubrication, if started, must be continued.	
Pressure range	1 ÷ 10 bar	
Temperature range	-10°C ÷ +60°C (standard) -25°C ÷ +60°C (BT)	
Orifice Ø	6.5 mm	
Flow at 6 bar with ΔP 1 bar	650 Nl/min.	
Mounting	In every position	

Standard dimensions

Type: **3/2 pilot/pilot**
3/2 pilot/pilot differential

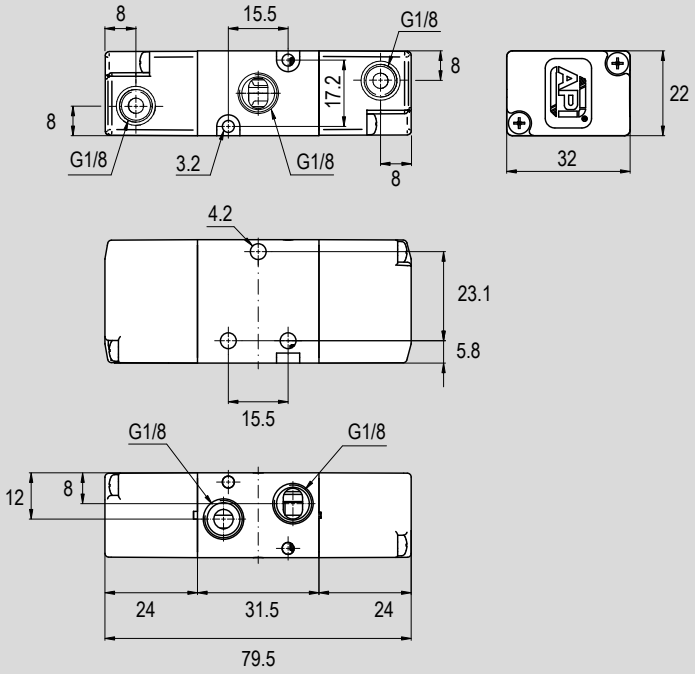

Version	Symbol	Code	Item
1/8" 3/2 pilot/pilot	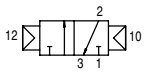	034016	A1P132
1/8" 3/2 pilot/pilot differential	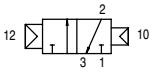	034017	A1P133

Air operated valves series A1

1/8", 5/2 Pilot/Spring

Main features

Version	Code	Item	Symbol
5/2 pilot/spring	034001	A1P150	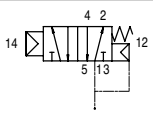



Technical data

Version	5/2 pilot/spring
Code	034001
Item	A1P150
Size	1/8"
Fluid	Compressed air with or without lubrication. Lubrication, if started, must be continued.
Pressure range	1,5 ÷ 10 bar
Temperature range	-10°C ÷ +60°C (standard) -25°C ÷ +60°C (BT)
Orifice Ø	6.5 mm
Flow at 6 bar with ΔP 1 bar	650 Nl/min.
Mounting	In every position

Standard dimensions

Type: **5/2 pilot/spring**

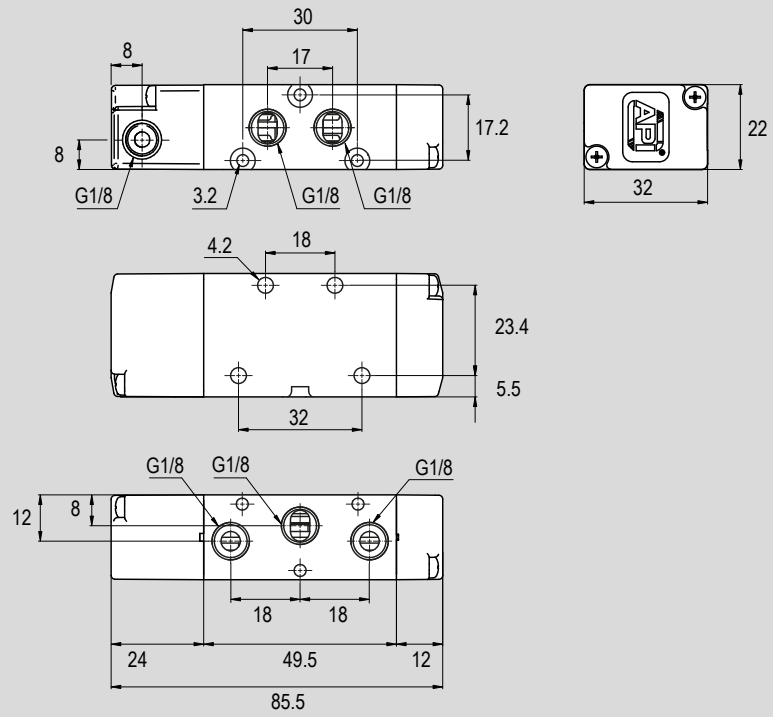

Version	Symbol	Code	Item
1/8" 5/2 pilot/spring	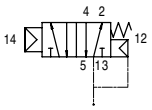	034001	A1P150

Air operated valves series A1

1/8", 5/2 Pilot/Pilot

Main features

Version	Code	Item	Symbol
5/2 pilot/pilot	034002	A1P151	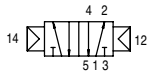
5/2 pilot/pilot differential	034018	A1P152	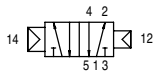



Technical data

Version	5/2 pilot/pilot	5/2 pilot/pilot differential
Code	034002	034018
Item	A1P151	A1P152
Size	1/8"	
Fluid	Compressed air with or without lubrication. Lubrication, if started, must be continued.	
Pressure range	1 ÷ 10 bar	
Temperature range	-10°C ÷ +60°C (standard) -25°C ÷ +60°C (BT)	
Orifice Ø	6.5 mm	
Flow at 6 bar with ΔP 1 bar	650 Nl/min.	
Mounting	In every position	

Standard dimensions

Type: **5/2 pilot/pilot**
5/2 pilot/pilot differential

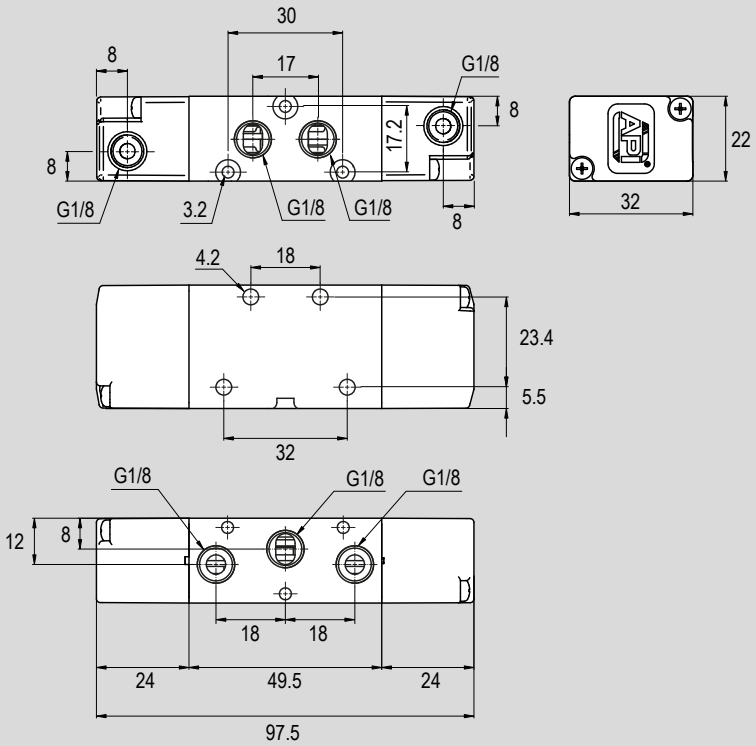

Version	Symbol	Code	Item
1/8" 5/2 pilot/pilot	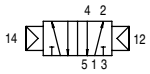	034002	A1P151
1/8" 5/2 pilot/pilot differential	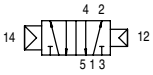	034018	A1P152

Air operated valves series A1
1/8", 5/3

Main features

Version	Code	Item	Symbol
5/3 closed centres	034019	A1P170	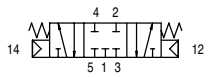
5/3 open centres	034020	A1P171	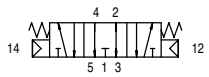
5/3 pressurized centres	034022	A1P172	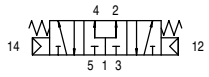
5/3 closed centres differential	034175	A1P173	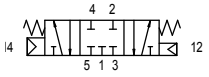



Technical data

Version	5/3 closed centres	5/3 open centres	5/3 pressurized centres	5/3 closed centres differential
Code	034019	034020	034022	034175
Item	A1P170	A1P171	A1P172	A1P173
Size	1/8"			
Fluid	Compressed air with or without lubrication. Lubrication, if started, must be continued.			
Pressure range	2,5 ÷ 10 bar			
Temperature range	-10°C ÷ +60°C (standard) -25°C ÷ +60°C (BT)			
Orifice Ø	6.5 mm			
Flow at 6 bar with ΔP 1 bar	650 Nl/min.			
Mounting	In every position			

Standard dimensions

Type: **5/3 C.C.**
5/3 O.C.
5/3 P.C.

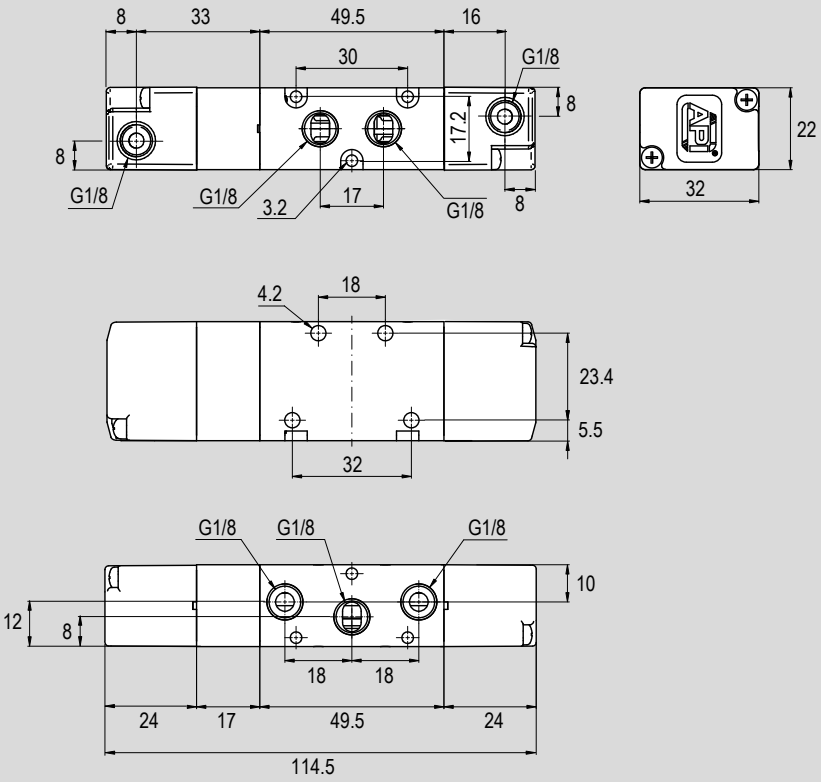

Version	Symbol	Code	Item
1/8" 5/3 closed centres	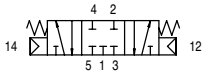	034019	A1P170
1/8" 5/3 open centres	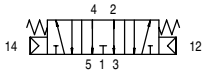	034020	A1P171
1/8" 5/3 pressurized centres	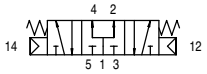	034022	A1P172
1/8" 5/3 closed centres differential	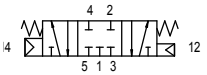	034175	A1P173

Air operated valves series A1

1/4", 3/2 Pilot/Spring

Main features

Version	Code	Item	Symbol
3/2 Normally closed	034027	A1P230	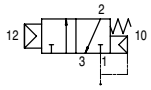
3/2 Normally open	034054	A1P231	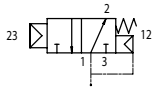



Technical data

Version	3/2 Normally closed	3/2 Normally open
Code	034027	034054
Item	A1P230	A1P231
Size	1/4"	
Fluid	Compressed air with or without lubrication. Lubrication, if started, must be continued.	
Pressure range	1,5 ÷ 10 bar	
Temperature range	-10°C ÷ +60°C (standard) -25°C ÷ +60°C (BT)	
Orifice Ø	8 mm	
Flow at 6 bar with ΔP 1 bar	1.100 Nl/min.	
Mounting	In every position	

Standard dimensions

Type: **3/2 N.C.**
3/2 N.O.

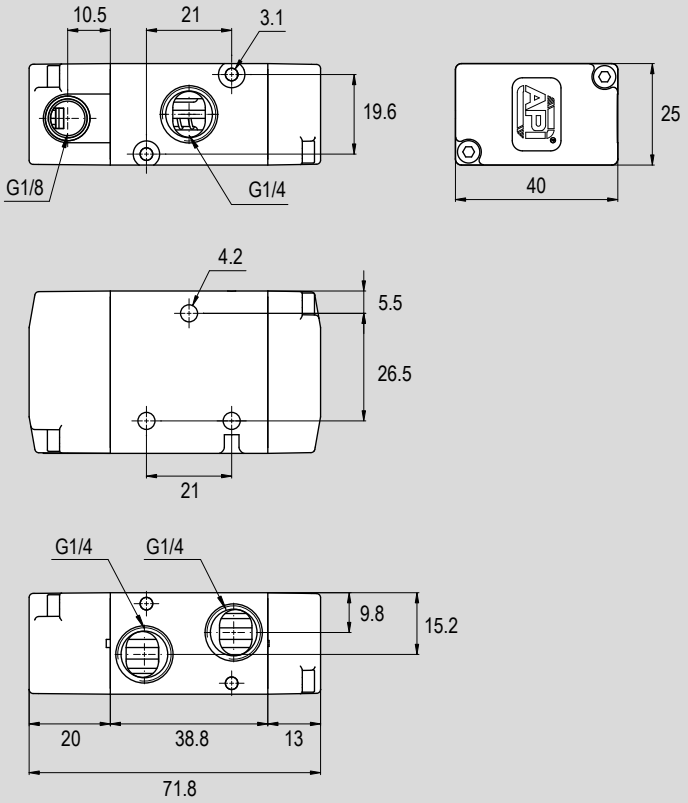

Version	Symbol	Code	Item
1/4" 3/2 Normally closed	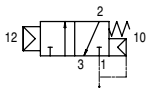	034027	A1P230
1/4" 3/2 Normally open	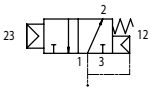	034054	A1P231

Air operated valves series A1

1/4", 3/2 Pilot/Pilot

Main features

Version	Code	Item	Symbol
3/2 pilot/pilot	034026	A1P232	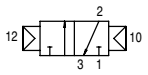
3/2 pilot/pilot differential	034055	A1P233	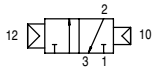



Technical data

Version	3/2 pilot/pilot	3/2 pilot/pilot differential
Code	034026	034055
Item	A1P232	A1P233
Size	1/4"	
Fluid	Compressed air with or without lubrication. Lubrication, if started, must be continued.	
Pressure range	1 ÷ 10 bar	
Temperature range	-10°C ÷ +60°C (standard) -25°C ÷ +60°C (BT)	
Orifice Ø	8 mm	
Flow at 6 bar with ΔP 1 bar	1.100 Nl/min.	
Mounting	In every position	

Standard dimensions

Type: **3/2 pilot/pilot**

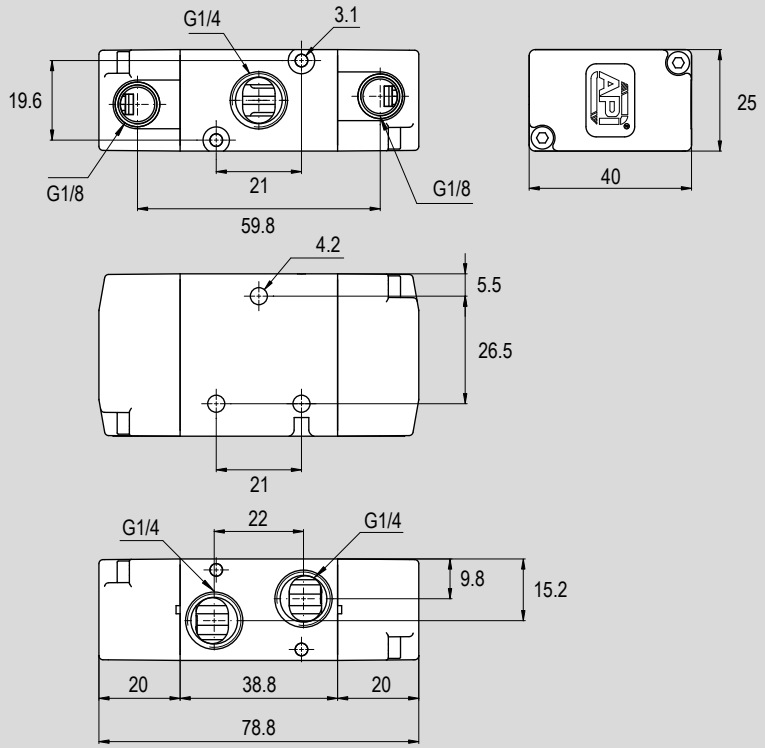

Version	Symbol	Code	Item
1/4" 3/2 pilot/pilot	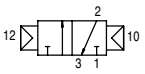	034026	A1P232
1/4" 3/2 pilot/pilot differential	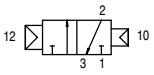	034055	A1P233

Air operated valves series A1

1/4", 5/2 Pilot/Spring

Main features

Version	Code	Item	Symbol
5/2 pilot/spring	034101	A1P250	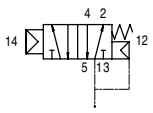



Technical data

Version	5/2 pilot/spring
Code	034101
Item	A1P250
Size	1/4"
Fluid	Compressed air with or without lubrication. Lubrication, if started, must be continued.
Pressure range	1,5 ÷ 10 bar
Temperature range	-10°C ÷ +60°C (standard) -25°C ÷ +60°C (BT)
Orifice Ø	8 mm
Flow at 6 bar with ΔP 1 bar	1.100 Nl/min.
Mounting	In every position

Standard dimensions

Type: **5/2 pilot/spring**

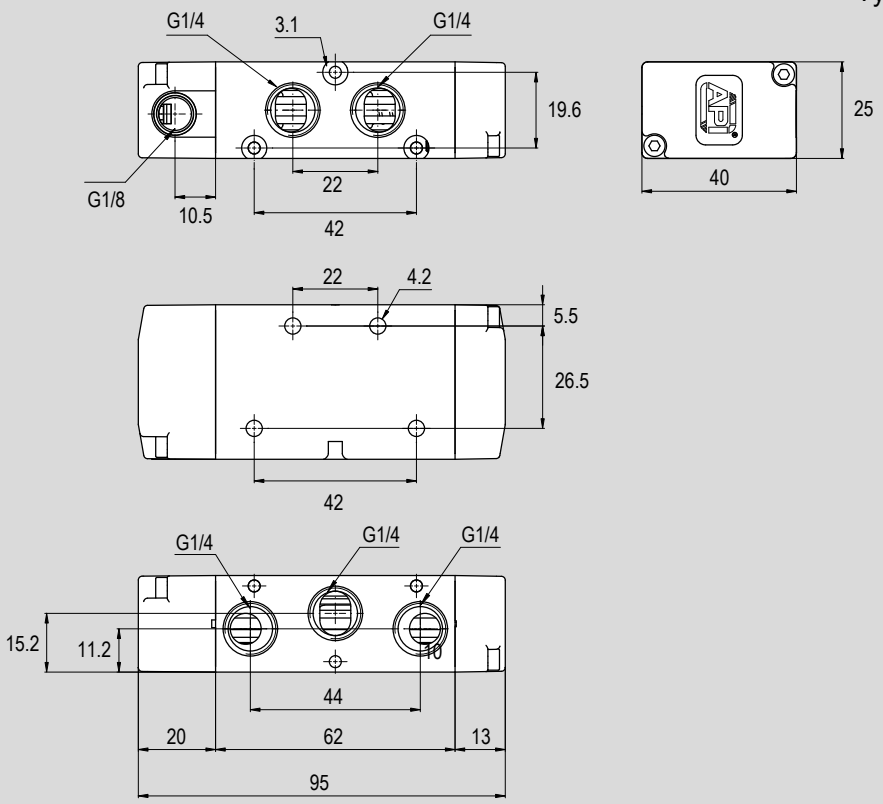

Version	Symbol	Code	Item
1/4" 5/2 pilot/spring	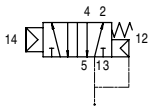	034101	A1P250

Air operated valves series A1

1/4", 5/2 Pilot/Pilot

Main features

Version	Code	Item	Symbol
5/2 pilot/pilot	034102	A1P251	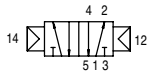
5/2 pilot/pilot differential	034056	A1P252	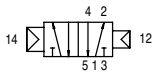



Technical data

Version	5/2 pilot/pilot	5/2 pilot/pilot differential
Code	034102	034056
Item	A1P251	A1P252
Size	1/4"	
Fluid	Compressed air with or without lubrication. Lubrication, if started, must be continued.	
Pressure range	1 ÷ 10 bar	
Temperature range	-10°C ÷ +60°C (standard) -25°C ÷ +60°C (BT)	
Orifice Ø	8 mm	
Flow at 6 bar with ΔP 1 bar	1.100 Nl/min.	
Mounting	In every position	

Standard dimensions

Type: **5/2 pilot/pilot**
5/2 pilot/pilot differential

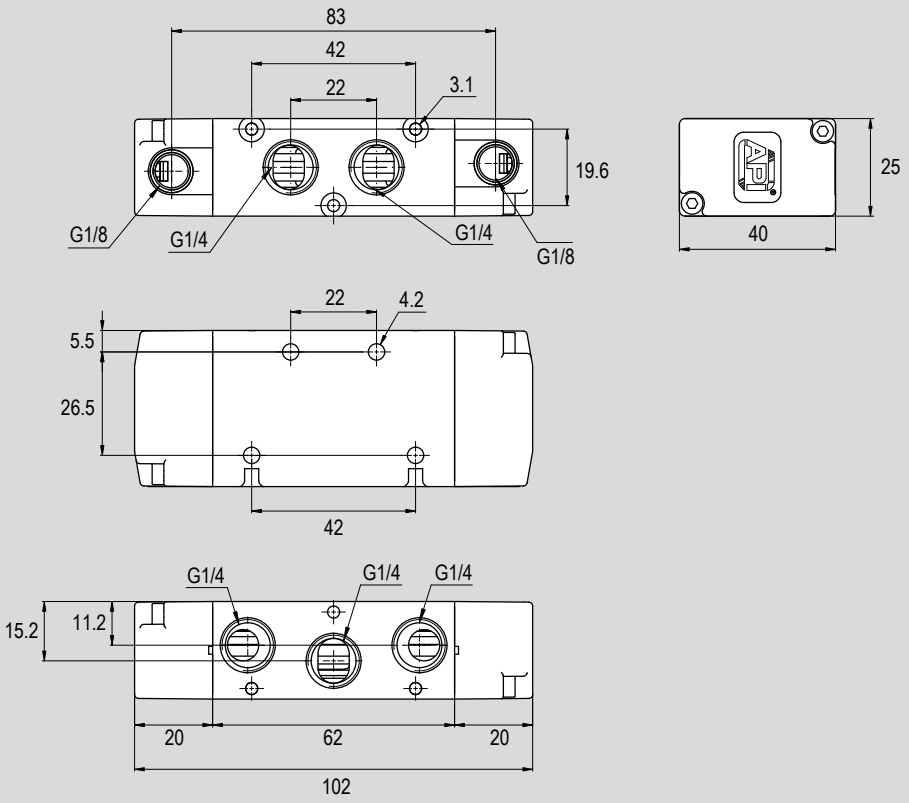

Version	Symbol	Code	Item
1/4" 5/2 pilot/pilot	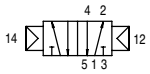	034102	A1P251
1/4" 5/2 pilot/pilot differential	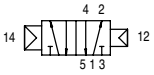	034056	A1P252

Air operated valves series A1
1/4", 5/3

Main features

Version	Code	Item	Symbol
5/3 closed centres	034029	A1P270	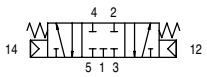
5/3 open centres	034030	A1P271	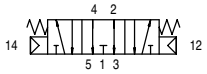
5/3 pressurized centres	034028	A1P272	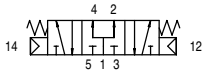



Technical data

Version	5/3 closed centres	5/3 open centres	5/3 pressurized centres
Code	034029	034030	034028
Item	A1P270	A1P271	A1P272
Size	1/4"		
Fluid	Compressed air with or without lubrication. Lubrication, if started, must be continued.		
Pressure range	2,5 ÷ 10 bar		
Temperature range	-10°C ÷ +60°C (standard) -25°C ÷ +60°C (BT)		
Orifice Ø	8 mm		
Flow at 6 bar with ΔP 1 bar	1.100 Nl/min.		
Mounting	In every position		

Standard dimensions

Type: **5/3 C.C.**
5/3 O.C.
5/3 P.C.

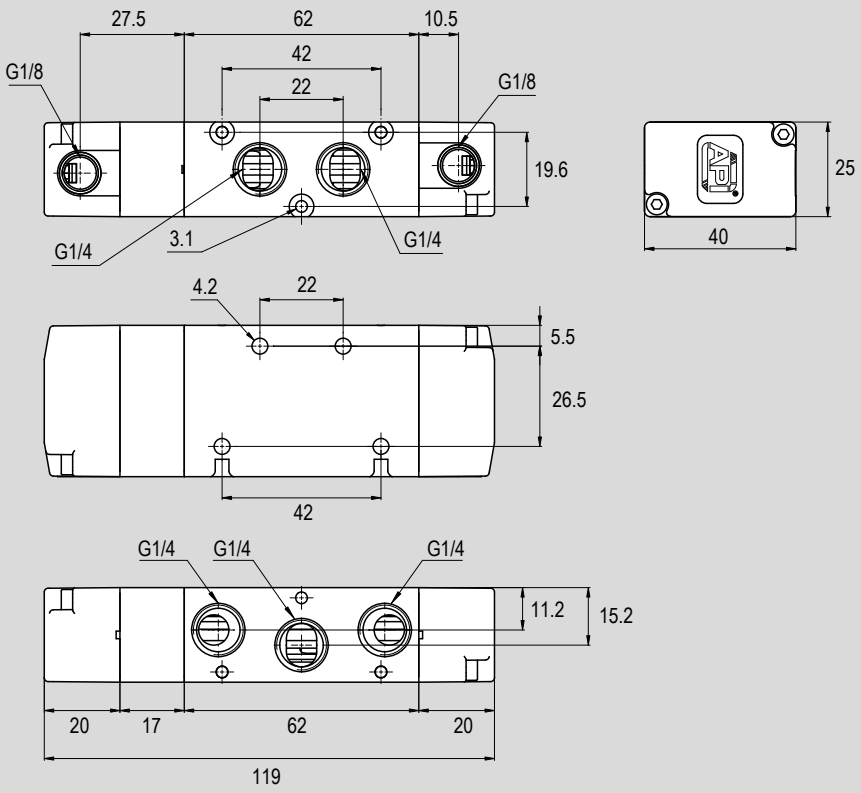

Version	Symbol	Code	Item
1/4" 5/3 closed centres	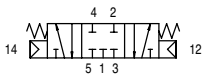	034029	A1P270
1/4" 5/3 open centres	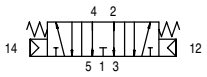	034030	A1P271
1/4" 5/3 pressurized centres	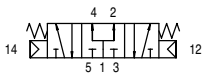	034028	A1P272

Air operated valves series A1

1/2", 3/2 Pilot/Spring

Main features

Version	Code	Item	Symbol
3/2 Normally closed	034116	A1P430	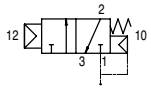
3/2 Normally open	034127	A1P431	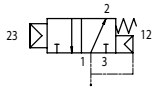



Technical data

Version	3/2 Normally closed	3/2 Normally open
Code	034116	034127
Item	A1P430	A1P431
Size	1/2"	
Fluid	Compressed air with or without lubrication. Lubrication, if started, must be continued.	
Pressure range	2,5 ÷ 10 bar	
Temperature range	-10°C ÷ +60°C (standard) -25°C ÷ +60°C (BT)	
Orifice Ø	15 mm	
Flow at 6 bar with ΔP 1 bar	2.900 Nl/min.	
Mounting	In every position	

Standard dimensions

Type: **3/2 N.C.**
3/2 N.O.

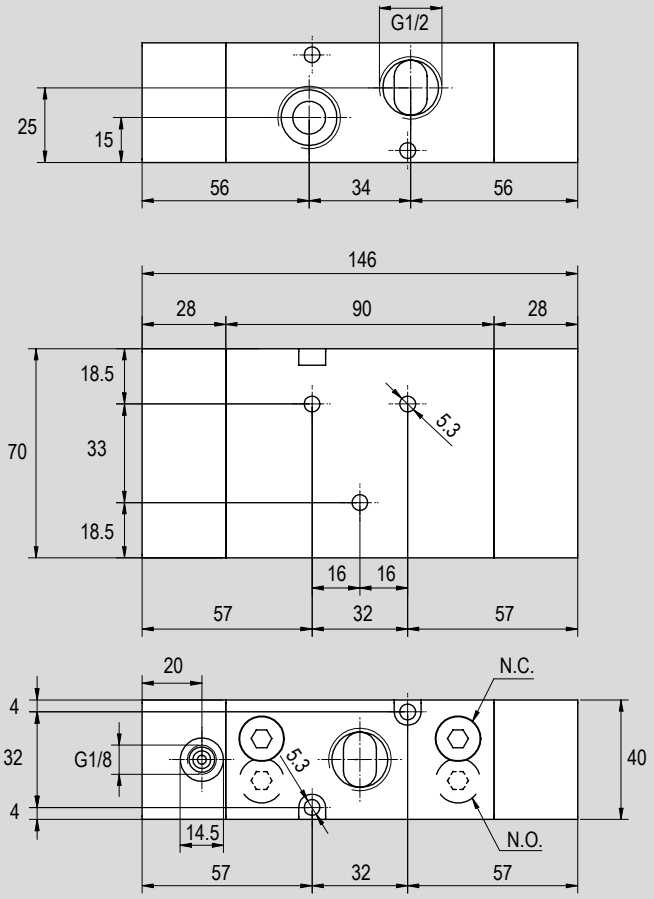

Version	Symbol	Code	Item
1/2" 3/2 Normally closed	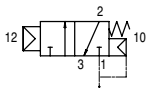	034116	A1P430
1/2" 3/2 Normally open	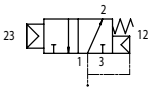	034127	A1P431

Air operated valves series A1

1/2", 3/2 Pilot/Pilot

Main features

Version	Code	Item	Symbol
3/2 pilot/pilot	034128	A1P432	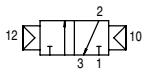



Technical data

Version	3/2 pilot/pilot
Code	034128
Item	A1P432
Size	1/2"
Fluid	Compressed air with or without lubrication. Lubrication, if started, must be continued.
Pressure range	1 ÷ 10 bar
Temperature range	-10°C ÷ +60°C (standard) -25°C ÷ +60°C (BT)
Orifice Ø	15 mm
Flow at 6 bar with ΔP 1 bar	2.900 Nl/min.
Mounting	In every position

Standard dimensions

Type: **3/2 pilot/pilot**

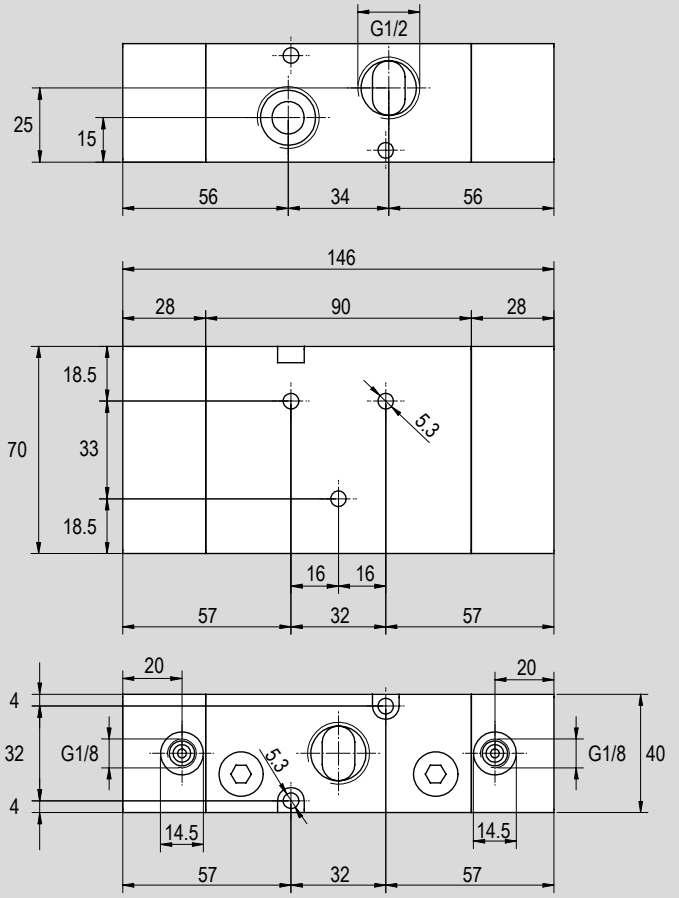

Version	Symbol	Code	Item
1/2" 3/2 pilot/pilot	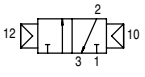	034128	A1P432

Air operated valves series A1

1/2", 5/2 Pilot/Spring

Main features

Version	Code	Item	Symbol
5/2 pilot/spring	034117	A1P450	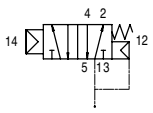



Technical data

Version	5/2 pilot/spring
Code	034117
Item	A1P450
Size	1/2"
Fluid	Compressed air with or without lubrication. Lubrication, if started, must be continued.
Pressure range	2,5 ÷ 10 bar
Temperature range	-10°C ÷ +60°C (standard) -25°C ÷ +60°C (BT)
Orifice Ø	15 mm
Flow at 6 bar with ΔP 1 bar	2.900 Nl/min.
Mounting	In every position

Standard dimensions

Type: **5/2 pilot/spring**

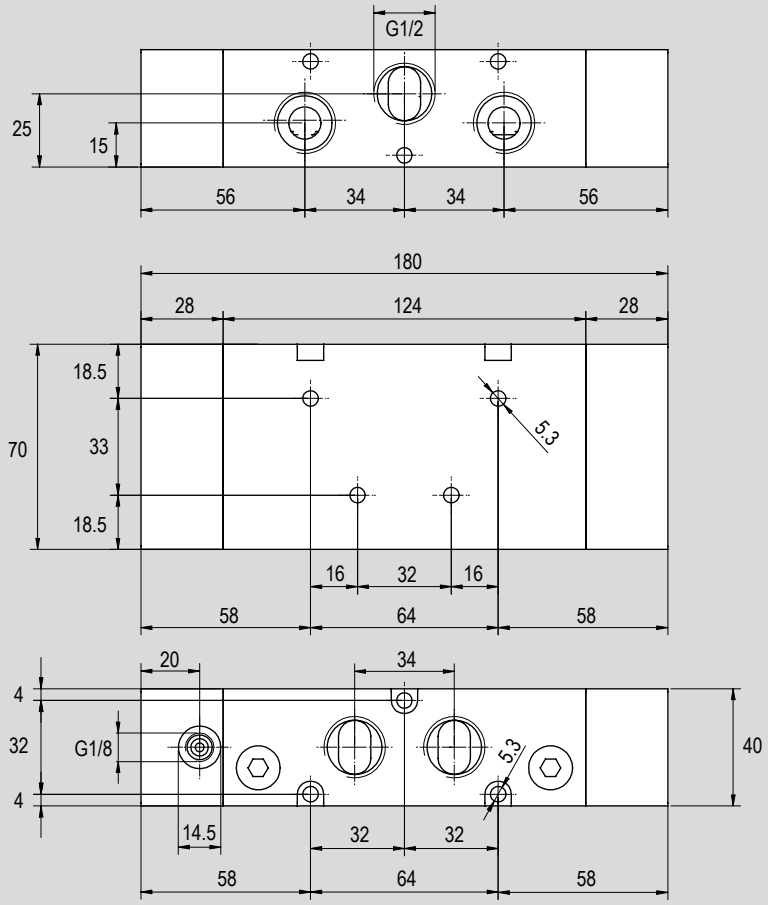

Version	Symbol	Code	Item
1/2" 5/2 pilot/spring	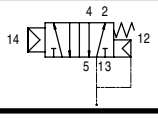	034117	A1P450

Air operated valves series A1

1/2", 5/2 Pilot/Pilot

Main features

Version	Code	Item	Symbol
5/2 pilot/pilot	034118	A1P451	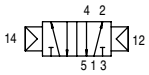
5/2 pilot/pilot differential	034136	A1P452	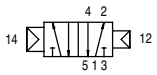



Technical data

Version	5/2 pilot/pilot	5/2 pilot/pilot differential
Code	034118	034136
Item	A1P451	A1P452
Size	1/2"	
Fluid	Compressed air with or without lubrication. Lubrication, if started, must be continued.	
Pressure range	1 ÷ 10 bar	
Temperature range	-10°C ÷ +60°C (standard) -25°C ÷ +60°C (BT)	
Orifice Ø	15 mm	
Flow at 6 bar with ΔP 1 bar	2.900 Nl/min.	
Mounting	In every position	

Standard dimensions

Type: **5/2 pilot/pilot**
5/2 pilot/pilot differential

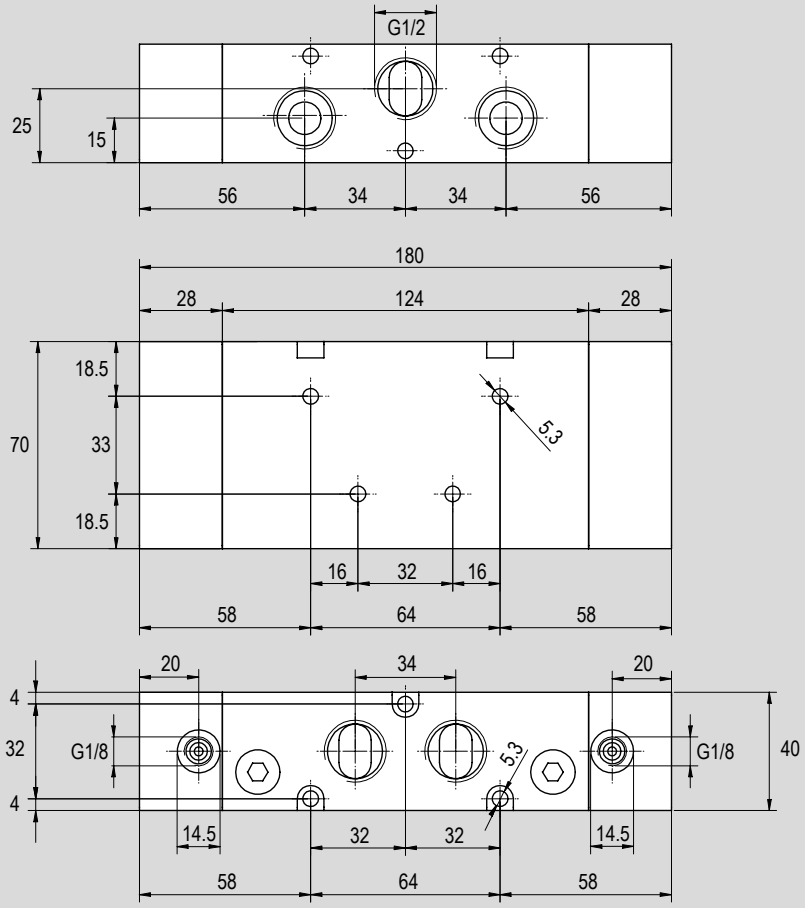

Version	Symbol	Code	Item
1/2" 5/2 pilot/pilot	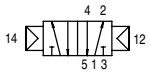	034118	A1P451
1/2" 5/2 pilot/pilot differential	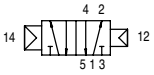	034136	A1P452

Air operated valves series A1
1/2", 5/3

Main features

Version	Code	Item	Symbol
5/3 closed centres	034129	A1P470	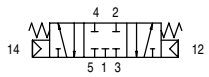
5/3 open centres	034130	A1P471	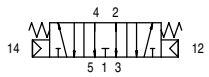
5/3 pressurized centres	034135	A1P472	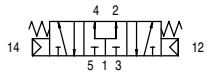



Technical data

Version	5/3 closed centres	5/3 open centres	5/3 pressurized centres
Code	034129	034130	034135
Item	A1P470	A1P471	A1P472
Size	1/2"		
Fluid	Compressed air with or without lubrication. Lubrication, if started, must be continued.		
Pressure range	2,5 ÷ 10 bar		
Temperature range	-10°C ÷ +60°C (standard) -25°C ÷ +60°C (BT)		
Orifice Ø	15 mm		
Flow at 6 bar with ΔP 1 bar	2.900 Nl/min.		
Mounting	In every position		

Standard dimensions

Type: **5/3 C.C.**
5/3 O.C.
5/3 P.C.

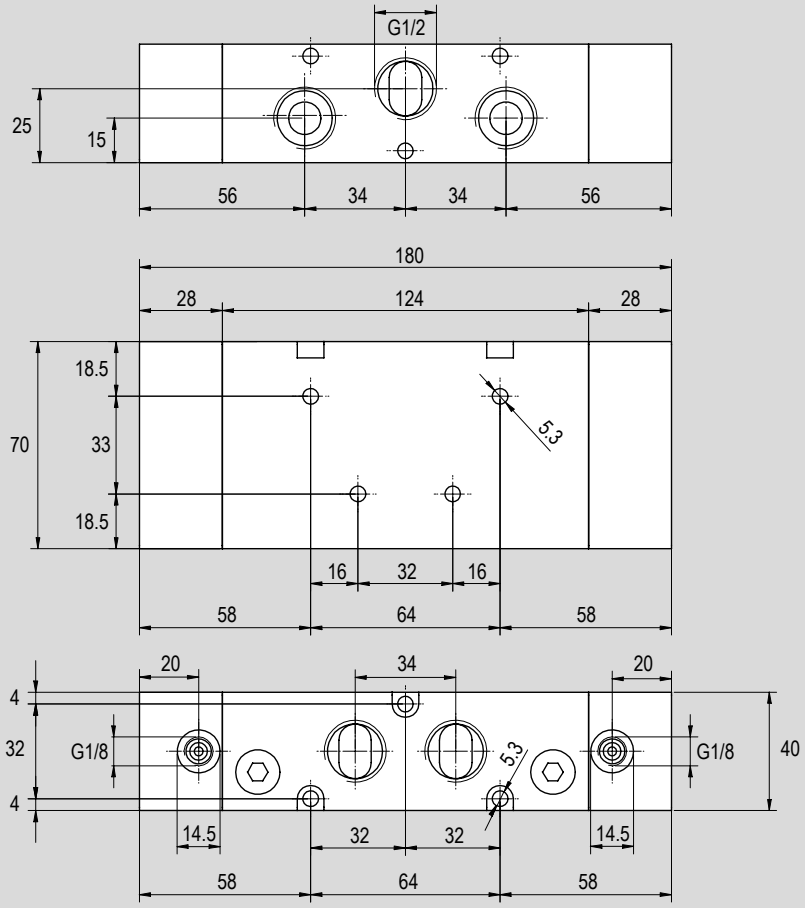

Version	Symbol	Code	Item
1/2" 5/3 closed centres	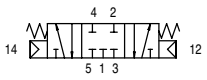	034129	A1P470
1/2" 5/3 open centres	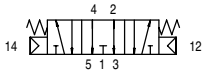	034130	A1P471
1/2" 5/3 pressurized centres	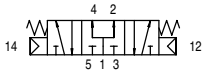	034135	A1P472

Sub-bases 1/8" A1B1..



Positions	Code	Item	Matching
2	034041	A1B102	1/8"
3	034042	A1B103	
4	034043	A1B104	
5	034044	A1B105	
6	034045	A1B106	
7	034046	A1B107	
8	034047	A1B108	
9	034048	A1B109	
10	034049	A1B110	

Sub-bases 1/4" A1B2..



Positions	Code	Item	Matching
2	034141	A1B202	1/4"
3	034142	A1B203	
4	034143	A1B204	
5	034144	A1B205	
6	034145	A1B206	
7	034146	A1B207	
8	034147	A1B208	
9	034148	A1B209	
10	034149	A1B210	

Closing plates for sub-bases A1C..



Code	Item	Matching
034050	A1C1	A1B1 (1/8")
034150	A1C2	A1B2 (1/4")

Plugs for sub-bases A1T..



Code	Item	Matching
034051	A1T1	A1B1 (1/8")
034151	A1T2	A1B2 (1/4")

Plates for valves PSV..



Per valvola (5 vie) taglia	Code	Item	Matching with cylinder Ø mm
1/8" - 1/4"	071458	PSV/A1/AMA-32-40	32-40
	071459	PSV/A1/AMA-50-63	50-63
1/8" - 1/4" - 1/2"	071460	PSV/A1/AMA-80-100-125	80÷125
1/4" - 1/2"	070822	PSV/A1/AMT-160-200	160-200

Notes

SUB-BASES
for valves Series A1



Find out our
key products

- **Solution for most applications**
- **Easy and intuitive choice**
- **Excellent value for money**
- **Wide availability**
- **Fast delivery**

Features and certifications

Multi-position sub-bases with fixed positions for valves, solenoid and air operated, series A1. Available for size 1/8" and 1/4", function 3/2 and 5/2 (solenoid/spring, solenoid/solenoid, pilot/spring, pilot/pilot) and 5/3. Mounting screws and relevant seals for each position included. Spare positions can be blanked with the closing plate, supplied with screws. With 3/2 valves, the plug close the not used way.
Supplied as standard in compliance to Reach and RoHS directives, and SIL certified.

Series A1B1..

from page 2.38.10



Series of sub-bases for valves, solenoid and air operated, size 1/8".

Series A1B2..

from page 2.38.20



Series of sub-bases for valves, solenoid and air operated, size 1/4".

Code key

Series	Size	Positions	/	Option
A1B	**2**	**04**	**/**	

- Series: A1B
- Size: 1 = 1/8"; 2 = 1/4"
- Positions: 02 = 2; 03 = 3; 04 = 4; 05 = 5; 06 = 6; 07 = 7; 08 = 8; 09 = 9; 10 = 10
- Option: P32* = Wide pitch 32 mm

How to order

Series	Size	Positions	Option
A1B	**2**	**04**	**/**

Notes

Options in the same grid are alternative to each others.

*Option Wide pitch 32 mm (**P32**) required for mounting of solenoid valves with coils type ASA2 and type ASA2/ATEX (size 30 mm) on the sub-base.

Accessories

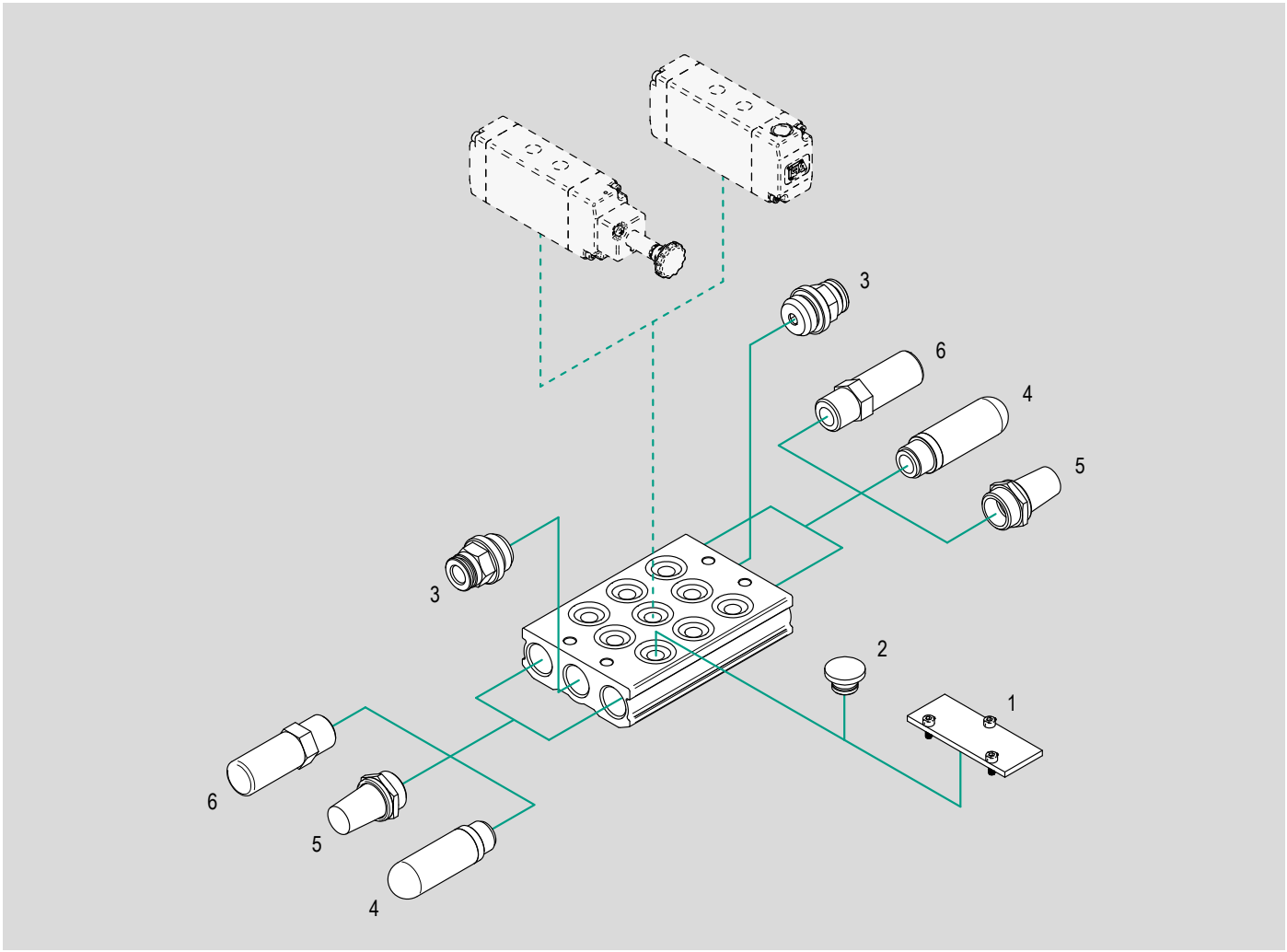

N.	Item	Description	Compliance	Matching		Code key & data sheet page
				A1B1	A1B2	
1	A1C1	Closing plate 1/8"	-	●	–	2.38.30
	A1C2	Closing plate 1/4"	-	–	●	
2	A1T1	Plug 1/8"	-	●	–	
	A1T2	Plug 1/4"	-	–	●	
3	R..	Push-in fittings	-	●	●	4.2.1
4	AS..	Plastic silencers	-	●	●	4.151.10
	SP..			●	●	4.151.20
5	A..	Sintered silencers	-	●	●	4.153.10
6	M..	Metal silencers	-	●	●	4.155.10

Key
● matching accessory; – not matching accessory

Sub-bases for valves series A1
Series A1B1, 1/8"

Main features

Version	Code	Item
Sub-base for valves A1 size 1/8", 2 positions	034041	A1B102
Sub-base for valves A1 size 1/8", 3 positions	034042	A1B103
Sub-base for valves A1 size 1/8", 4 positions	034043	A1B104
Sub-base for valves A1 size 1/8", 5 positions	034044	A1B105
Sub-base for valves A1 size 1/8", 6 positions	034045	A1B106
Sub-base for valves A1 size 1/8", 7 positions	034046	A1B107
Sub-base for valves A1 size 1/8", 8 positions	034047	A1B108
Sub-base for valves A1 size 1/8", 9 positions	034048	A1B109
Sub-base for valves A1 size 1/8", 10 positions	034049	A1B110



Technical data

Version	Sub-base A1B1..								
Code	034041	034042	034043	034044	034045	034046	034047	034048	034049
Item	A1B102	A1B103	A1B104	A1B105	A1B106	A1B107	A1B108	A1B109	A1B110
Size	1/8"								
Function	Manifold								
Positions	2	3	4	5	6	7	8	9	10
Ports	G1/4"								
Matching valves	Series A1 1/8"								

Standard materials

Description	Material
Body	Profiled die-cast aluminium

Important note

Option Wide pitch 32 mm (**P32**) required for mounting of solenoid valves with coils type ASA2 and type ASA2/ATEX (size 30 mm) on the sub-base, see page 2.38.3

Standard dimensions

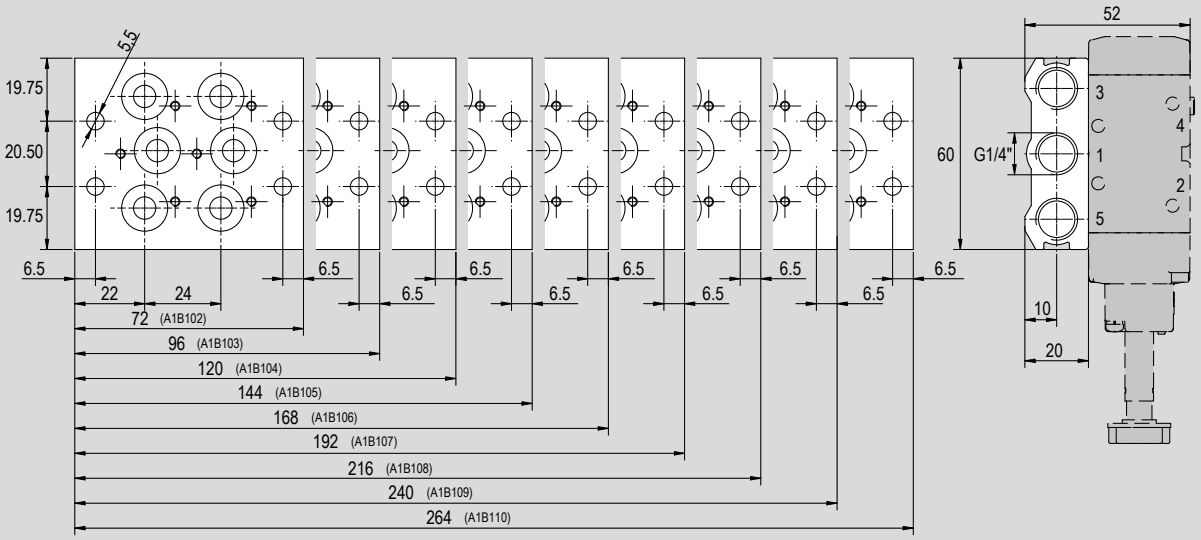

Dimensions with option P32 - Wide pitch for valves with coil size 30 mm

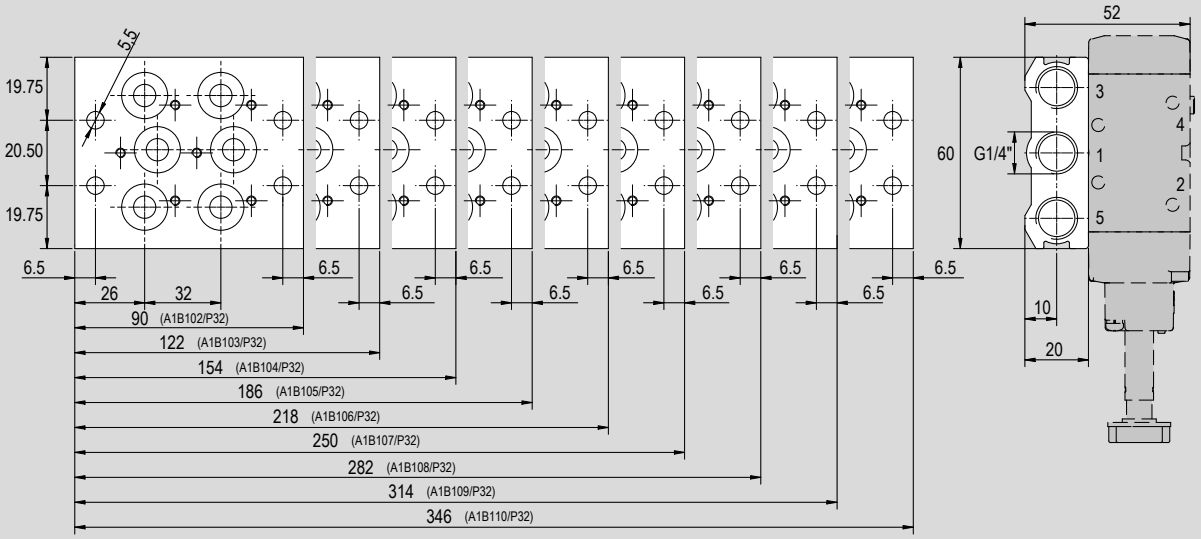

Sub-bases for valves series A1
Series A1B2, 1/4"

Main features

Version	Code	Item
Sub-base for valves A1 size 1/4", 2 positions	034141	A1B202
Sub-base for valves A1 size 1/4", 3 positions	034142	A1B203
Sub-base for valves A1 size 1/4", 4 positions	034143	A1B204
Sub-base for valves A1 size 1/4", 5 positions	034144	A1B205
Sub-base for valves A1 size 1/4", 6 positions	034145	A1B206
Sub-base for valves A1 size 1/4", 7 positions	034146	A1B207
Sub-base for valves A1 size 1/4", 8 positions	034147	A1B208
Sub-base for valves A1 size 1/4", 9 positions	034148	A1B209
Sub-base for valves A1 size 1/4", 10 positions	034149	A1B210



Technical data

Version	Sub-base A1B2..								
Code	034141	034142	034143	034144	034145	034146	034147	034148	034149
Item	A1B202	A1B203	A1B204	A1B205	A1B206	A1B207	A1B208	A1B209	A1B210
Size	1/4"								
Function	Manifold								
Positions	2	3	4	5	6	7	8	9	10
Ports	G3/8"								
Matching valves	Series A1 1/4"								

Standard materials

Description	Material
Body	Profiled die-cast aluminium

Important note

Option Wide pitch 32 mm (**P32**) required for mounting of solenoid valves with coils type ASA2 and type ASA2/ATEX (size 30 mm) on the sub-base, see page 2.38.3

Standard dimensions

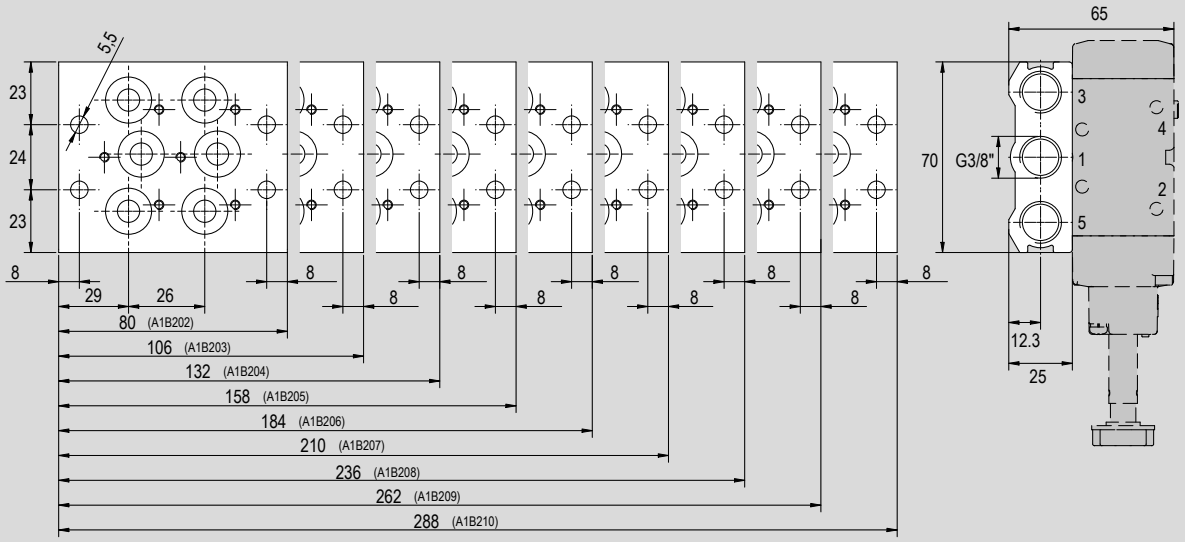

Dimensions with option P32 - Wide pitch for valves with coil size 30 mm

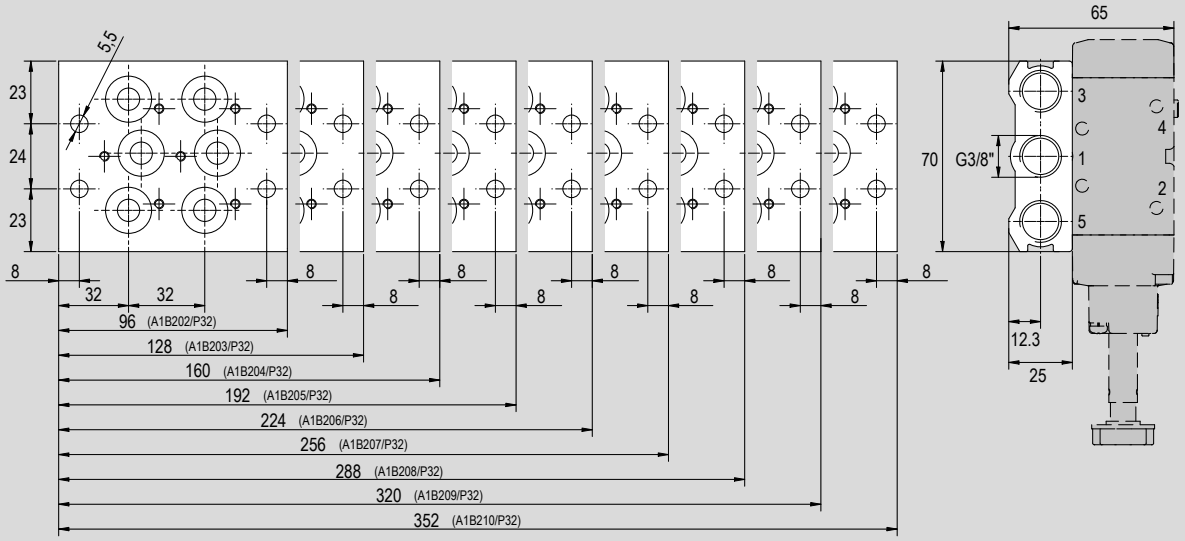

Sub-bases for valves series A1
Accessories for sub-bases

Main features

Version	Code	Item
Closing plate for sub-bases A1B1	034050	A1C1
Closing plate for sub-bases A1B2	034150	A1C2



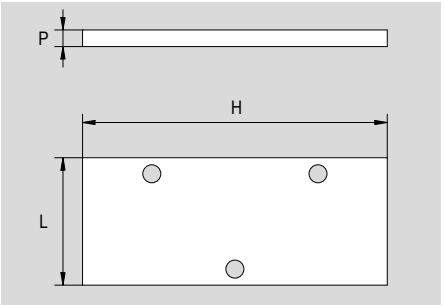

Technical data

Version	Closing plate A1C..	
Code	034050	034150
Item	A1C1	A1C2
Size	1/8"	1/4"
Material	Aluminium	
Function	Closing plate for sub-bases	
Matching	Sub-base series A1B1	Sub-base series A1B2

Dimensions

Item	Code	Size	L	H	P
A1C1	034050	1/8"	23	55	3
A1C2	034150	1/4"	25	65	3

Main features

Version	Code	Item
Plug for sub-bases A1B1	034051	A1T1
Plug for sub-bases A1B2	034151	A1T2



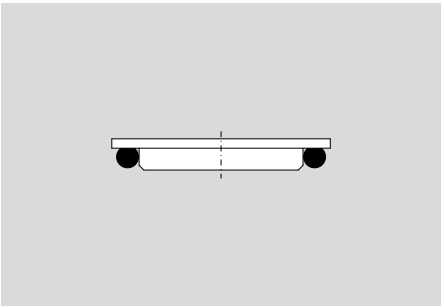

Technical data

Version		Plug A1T..	
Code		034051	034151
Item		A1T1	A1T2
Size		1/8"	1/4"
Material	Body	Aluminium	
	Seals	NBR	
Function		Plug for sub-bases	
Matching		Sub-base series A1B1	Sub-base series A1B2

Notes

PLATES
for valves Series A1

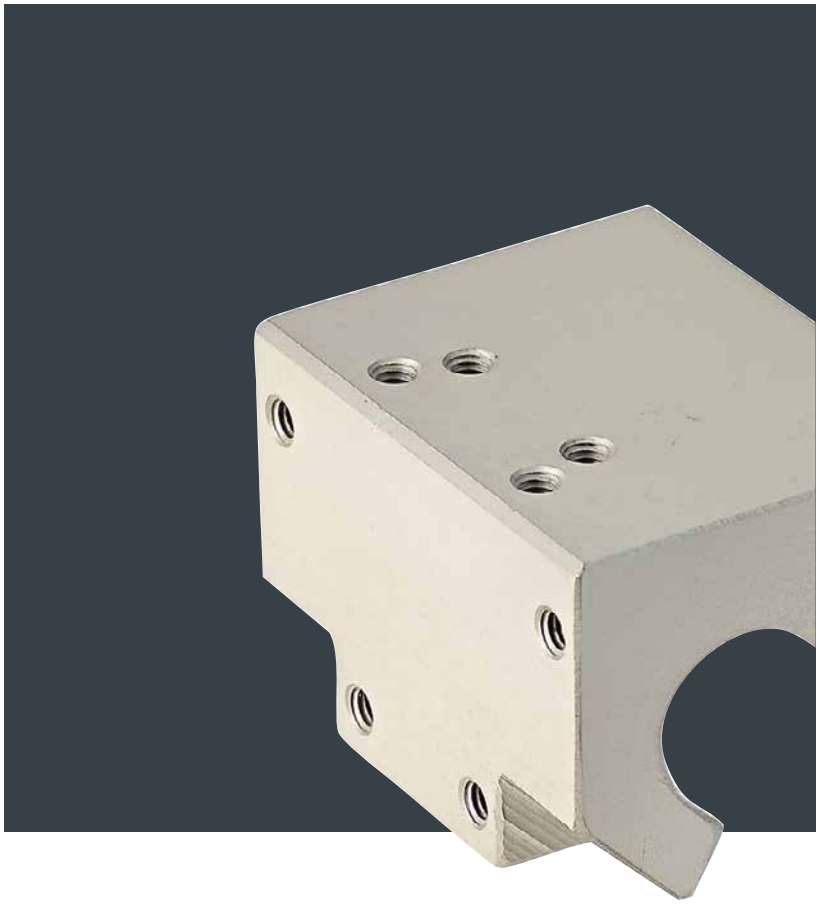

Find out our **key products**

- **Solution for most applications**
- **Easy and intuitive choice**
- **Excellent value for money**
- **Wide availability**
- **Fast delivery**

Features and certifications

Plates for valves series A1. These components allow the mounting of valves and solenoid valves series A1 directly on the barrel or on the tie-rod of cylinders ISO 15552 type AMA, BMA and AMT.
Supplied as standard in compliance to Reach and RoHS directives.

Series PSV..

from page 2.39.10



Series of plates for mounting valves and solenoid valves series A1 5/2 and 5/3 on cylinders ISO 15552 type AMA, BMA and AMT.
These plates are equipped with multiple holes for mounting at least two sizes of valves series A1, according to cylinder bore.

Code key

Series	/	Matching valves	/	Matching cylinder	-	Matching cylinder bore
PSV	**/**	**A1**	**/**	**AMA**	**-**	**32-40**

PSV	A1 = valves series A1	AMA = cylinder type AMA and BMA	32-40 = from Ø 32 to Ø 40
		AMT = cylinder type AMT	50-63 = from Ø 50 to Ø 63
			80-100-125 = from Ø 80 to Ø 125
			160-200* = from Ø 160 to Ø 200

How to order

Series	Valve	Cylinder	Bore
PSV	**A1**	**AMA**	**32-40**

Notes

Options in the same grid are alternative to each others.

For standard materials see data sheet.

* Availabe only for type AMT.

For matching with size of valves series A1 and with type/bore of cylinders, see page 2.39.4

Matching with valves

Series/size valve (5/2 - 5/3)	Plate				See from page
	PSV/A1/AMA-32-40	PSV/A1/AMA-50-63	PSV/A1/AMA-80-100-125	PSV/A1/AMT-160-200	
Series A1E1 (1/8")	●	●	●	-	2.21.10
Series A1P1 (1/8")	●	●	●	-	2.31.10
Series A1E2 (1/4")	●	●	●	●	2.23.10
Series A1P2 (1/4")	●	●	●	●	2.33.10
Series A1E4 (1/2")	-	-	●	●	2.25.10
Series A1E4 (1/2")	-	-	●	●	2.35.10

Key

● allowed matching; - not allowed matching

Matching with cylinders

Cylinder type/bore		Plate				See from page
		PSV/A1/AMA-32-40	PSV/A1/AMA-50-63	PSV/A1/AMA-80-100-125	PSV/A1/AMT-160-200	
Type AMA	Ø 32-40	●	-	-	-	1.5.20
	Ø 50-63	-	●	-	-	
	Ø 80÷125	-	-	●	-	
Type BMA	Ø 32-40	●	-	-	-	1.5.50
	Ø 50-63	-	●	-	-	
	Ø 80÷125	-	-	●	-	
Type AMT	Ø 32÷125	-	-	-	-	1.5.20
	Ø 160-200	-	-	-	●	1.5.70
	Ø 250-320	-	-	-	-	
Type BMT	Ø 32÷125	-	-	-	-	1.5.50

Key

● allowed matching; - not allowed matching

Plates for valves series A1
Series PSV

Main features

Version	Code	Item
Plate for cylinder ISO 15552 type AMA/BMA 32-40	071458	PSV/A1/AMA-32-40
Plate for cylinder ISO 15552 type AMA/BMA 50-63	071459	PSV/A1/AMA-50-63
Plate for cylinder ISO 15552 type AMA/BMA 80-100-125	071460	PSV/A1/AMA-80-100-125
Plate for cylinder ISO 15552 type AMT 160-200	070822	PSV/A1/AMT-160-200



Notes

Kit include n. 2 screws and n. 2 grains

Standard materials

Description	Material
Body	Neutral anodized aluminium S11
Screws	Stainless Steel
Grains	Steel

Standard dimensions

Type: **PSV/A1/AMA-32-40**

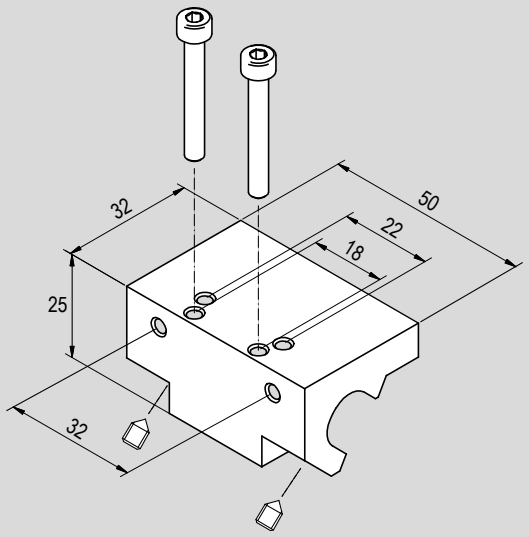

Type: **PSV/A1/AMA-50-63**

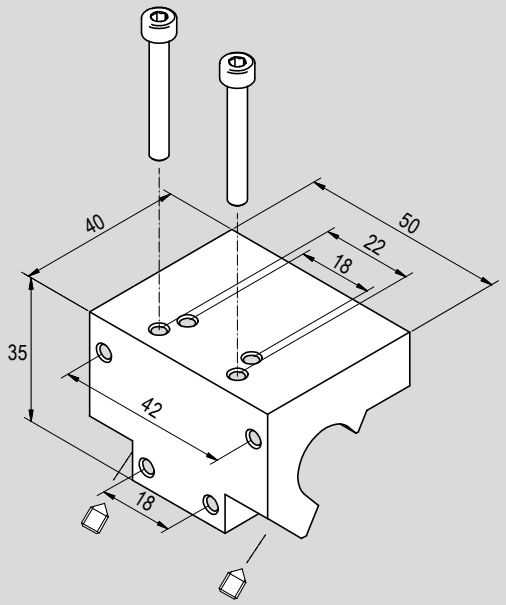

Type: **PSV/A1/AMA-80-100-125**

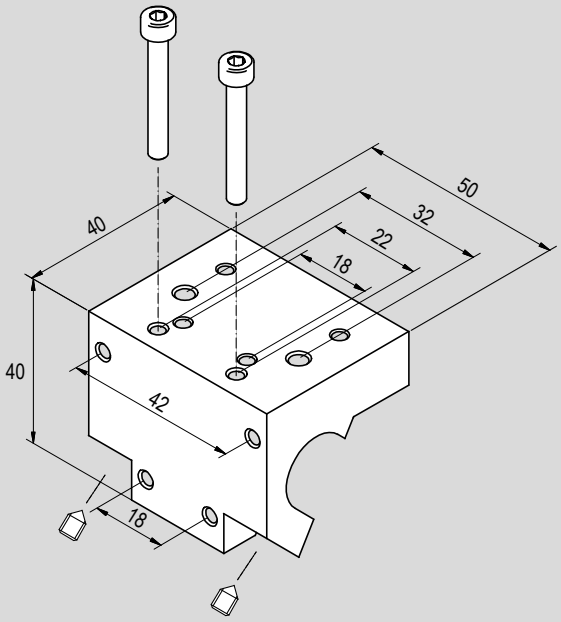

Type: **PSV/A1/AMT-160-200**

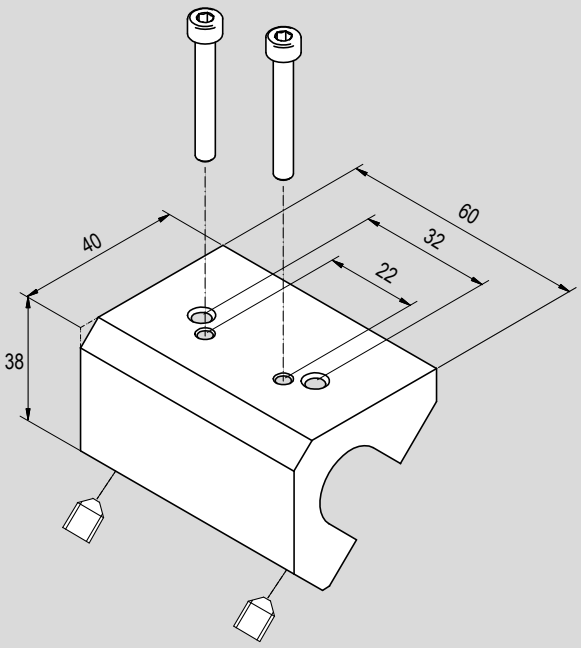

NAMUR

solenoid operated valves Series A1N



Find out our
key products

- **Solution for most applications**
- **Easy and intuitive choice**
- **Excellent value for money**
- **Wide availability**
- **Fast delivery**

Features and certifications

Spool valves, with static seals, high flow, NAMUR interface. Available in size 1/4", solenoid operated, with functions: 3/2 solenoid/spring normally closed and solenoid/solenoid, 5/2 solenoid/spring and solenoid/solenoid, 5/3 open centres, closed centres and pressurized centres.
Coils and connectors to be ordered separately. These components are suitable for working with pneumatic rotary actuators series AR, see page 2.400.1
Supplied as standard in compliance to Reach and RoHS directives, and SIL certified. On request the valve body can be supplied according to 2014/34/EU ATEX Directive, classification Ex h, and also complete with ATEX coil and connector, in different classifications (see from page 2.320.1).

Series A1N 1/4" 3/2 Solenoid/Spring

from page 2.46.10



Series of spool valves, with static seals, high flow, NAMUR interface.
Available in size 1/4", 3/2 solenoid/spring normally closed.
Coils and connectors to be ordered separately.

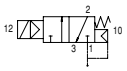

Series A1N 1/4" 3/2 Solenoid/Solenoid

from page 2.46.30



Series of spool valves, with static seals, high flow, NAMUR interface.
Available in size 1/4", 3/2 solenoid/solenoid.
Coils and connectors to be ordered separately.

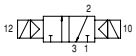

Series A1N 1/4" 5/2 Solenoid/Spring

from page 2.46.50



Series of spool valves, with static seals, high flow, NAMUR interface.
Available in size 1/4", 5/2 solenoid/spring.
Coils and connectors to be ordered separately.

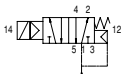

Series A1N 1/4" 5/2 Solenoid/Solenoid

from page 2.46.70



Series of spool valves, with static seals, high flow, NAMUR interface.
Available in size 1/4", 5/2 solenoid/solenoid.
Coils and connectors to be ordered separately.

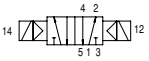

Series A1N 1/4" 5/3

from page 2.46.90



Series of spool valves, with static seals, high flow, NAMUR interface.
Available in size 1/4", 5/3 closed centres, 5/3 open centres e 5/3 pressurized centres, solenoid operated.
Coils and connectors to be ordered separately.

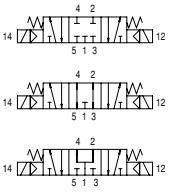

Series A1N 1/4" 3/2 - 5/2 - 5/3 ATEX

from page 2.320.1



Series of spool valves, with static seals, high flow, NAMUR interface.
Available in size 1/4", 3/2 solenoid/spring normally closed and solenoid/solenoid, 5/2 solenoid/spring and solenoid/solenoid, 5/3 open centres, closed centres and pressurized centres, solenoid operated, supplied according to 2014/34/EU ATEX Directive in different classifications

Options

Description		Symbol	Suffix
Low temperatures seals	-25°C ÷ +60°C		**BT**
ATEX valve body*			**/ATEX**
Special versions on request			**/S**

The options, when this is possible, can be combined with each other. For options matching see the table below; For code key see from page 2.44.5
*For valves complete with ATEX coil and connector, in different classifications, see page 2.320.1.

Options matching

Series	Size	Function		Standard options matching	
				BT	**/ATEX**
A1NE	1/4"	3/2	Solenoid/Spring	●	●
			Solenoid/Solenoid	●	●
		5/2	Solenoid/Spring	●	●
			Solenoid/Solenoid	●	●
		5/3		●	●

Key
● allowed matching; – not allowed matching

Standard materials

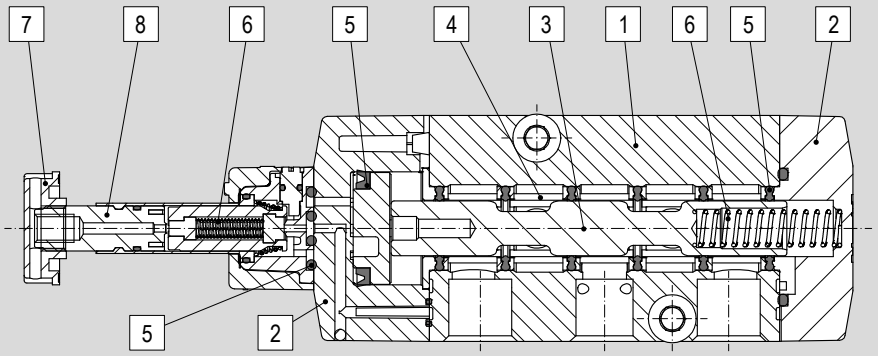

Position	Description	Material
		1/4"
1	Body	Die-cast painted aluminium
2	Covers	Tecnopolymer
3	Spool	Hard anodized aluminium
4	Distancers	Tecnopolymer
5	Seals	HNBR
6	Springs	Spring steel
7	Locking nut	Plastic
8	Plunger	Brass

Code key

Series	Actuation	Size	Function	Options	/	ATEX valve body
A1N	**E**	**2**	**50**		**/**	

- Series: A1N
- Actuation: E = Electric
- Size: 2 = 1/4"
- Function:
  - 30 = 3/2 Normally closed
  - 32 = 3/2 Solenoid/Solenoid
  - 50 = 5/2 Solenoid/Spring
  - 51 = 5/2 Solenoid/Solenoid
  - 70 = 5/3 Closed Centres
  - 71 = 5/3 Open Centres
  - 72 = 5/3 Pressurized Centres
- Options: BT = Low temperatures seals
- ATEX valve body: ATEX — CE Ex II 2G Ex h IIB T5 Gb / II 2D Ex h IIIC T100°C Db

ATEX note

For ATEX coils and connectors choice, classification, features, dimensions and matching, see page 2.320.1

For further information on the ATEX 2014/34/EU Directive, on classifications and protections, see from page III.1

How to order

Series	Actuation	Size	Function	Option
A1N	**E**	**2**	**50**	**-**

Notes

Options in the same grid are alternative to each others.

For further information on options and their matching, see page 2.44.3.

Coils and connectors to be ordered separately, see page 2.48.1

Accessories

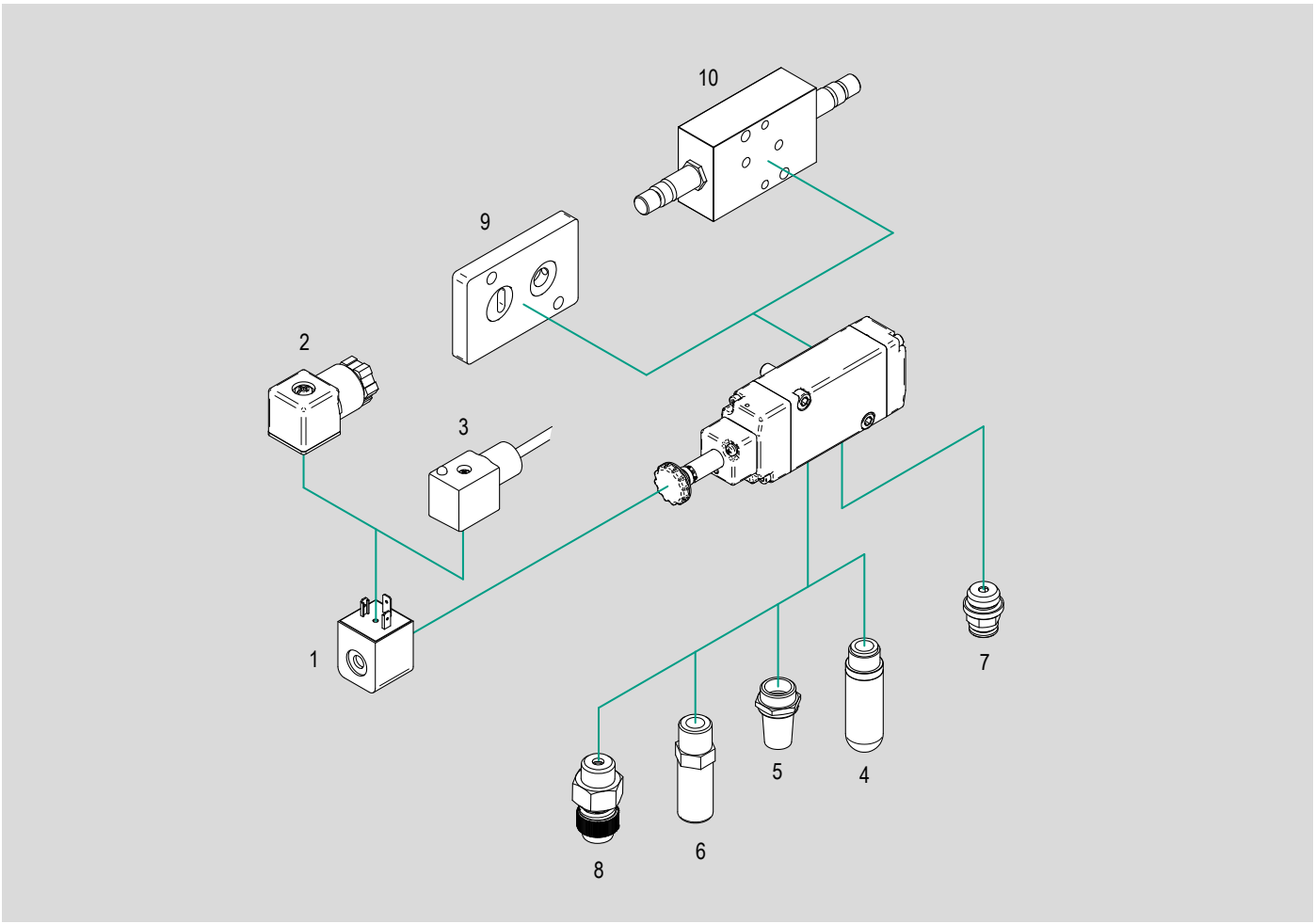

N.	Item	Description	Compliance	Matching	Code key page	Data sheet page
				1/4"		
1	ASA12..	Coil	EN60204 VDE0580	●	2.48.1	2.315.10
	ASA2..*		EN60204.1 VDE0580	●		2.315.11
2	A122..N	Connector	VDE 0110 - 1/89	●		2.318.12
	A182..N*			●		2.318.14
3	A122..NK	Cabled connector		●		2.318.12
	A182..NK*			●		2.318.14
4	AS..	Plastic silencers	-	●	4.151.10	
	SP..			●	4.151.20	
5	A..	Sintered silencers	-	●	4.153.10	
6	M..	Metal silencers	-	●	4.155.10	
7	R..	Push-in fittings	UNI ISO 228/1 UNI ISO7/1 ISO R/232	●	4.2.1	
8	A..	Silenced exhaust restrictors	-	●	4.97.1	
9	PSN..	Plate for valves	NAMUR	●	2.48.1	2.56.10
10	APNR..	Speed regulators for rotary actuators	NAMUR	●		2.430.1

Key
● matching accessory; – not matching accessory

*The valve direct mounting to another component require the plate type PSN

NAMUR solenoid operated valves series A1N

1/4", 3/2 Solenoid/Spring

Main features

Version	Code	Item	Symbol
3/2 Normally closed	034059	A1NE230	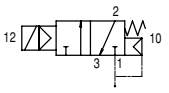



Technical data

Version		3/2 Normally closed
Code		034059
Item		A1NE230
Size		1/4"
Fluid		Compressed air with or without lubrication. Lubrication, if started, must be continued.
Pressure range		1,5 ÷ 10 bar
Temperature range		-10°C ÷ +60°C (standard) -25°C ÷ +60°C (BT)
Plunger Ø		9 mm
Orifice Ø		7 mm
Flow at 6 bar with ΔP 1 bar		1.000 Nl/min.
Mounting		In every position
Manual override		Bistable
Response time at 6 bar	Energizing	45 ms.
	De-energizing	19 ms.

Notes

Coils and connectors for standard versions to be ordered separately.
For coils type ASA12 and ASA2 see from page 2.315.1. For connectors type A122 e A182 see from page 2.318.1

For valves complete with ATEX coil and connector, in different classifications, see page 2.320.1

Standard dimensions

Type: **3/2 N.C.**

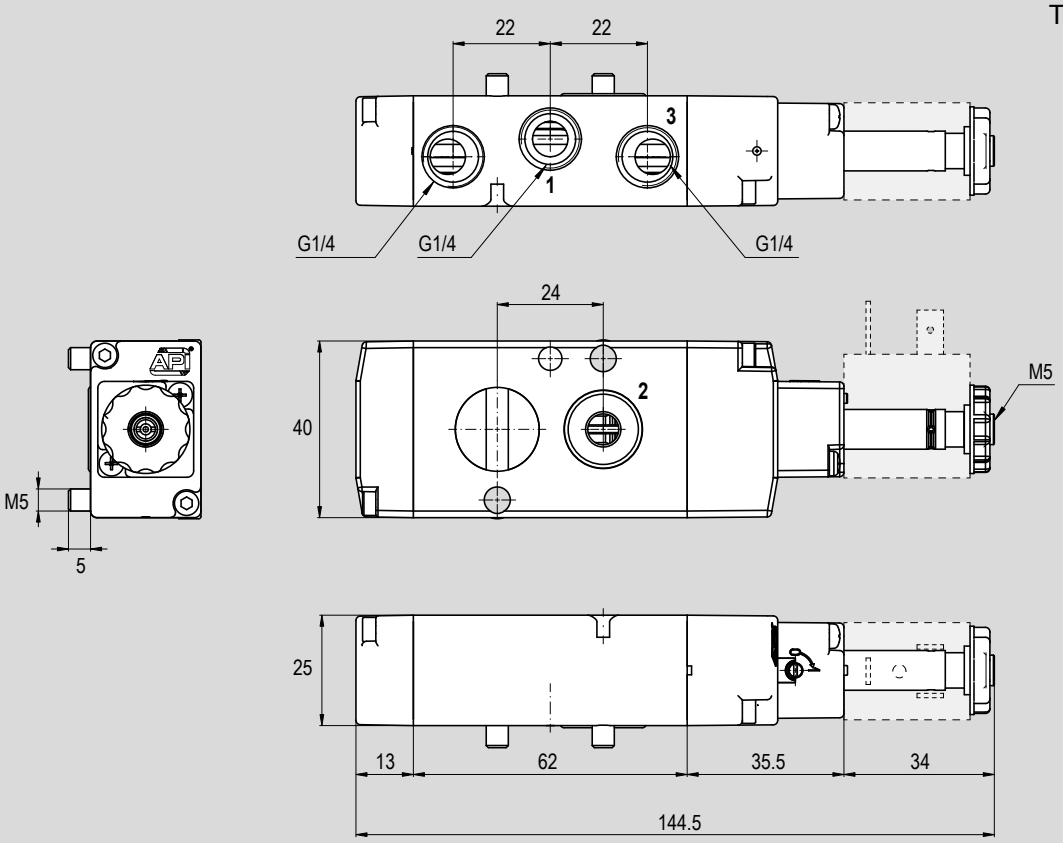

Version	Symbol	Code	Item
1/4" 3/2 Normally closed	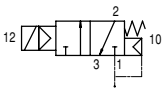	034059	A1NE230

NAMUR solenoid operated valves series A1N

1/4", 3/2 Solenoid/Solenoid

Main features

Version	Code	Item	Symbol
3/2 solenoid/solenoid	034060	A1NE232	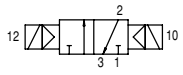



Technical data

Version		3/2 solenoid/solenoid
Code		034060
Item		A1NE232
Size		1/4"
Fluid		Compressed air with or without lubrication. Lubrication, if started, must be continued.
Pressure range		1 ÷ 10 bar
Temperature range		-10°C ÷ +60°C (standard) -25°C ÷ +60°C (BT)
Plunger Ø		9 mm
Orifice Ø		7 mm
Flow at 6 bar with ΔP 1 bar		1.000 Nl/min.
Mounting		In every position
Manual override		Bistable
Response time at 6 bar	Energizing	21 ms.
	De-energizing	21 ms.

Notes

Coils and connectors for standard versions to be ordered separately.
For coils type ASA12 and ASA2 see from page 2.315.1. For connectors type A122 e A182 see from page 2.318.1

For valves complete with ATEX coil and connector, in different classifications, see page 2.320.1

Standard dimensions

Type: **3/2 solenoid/solenoid**

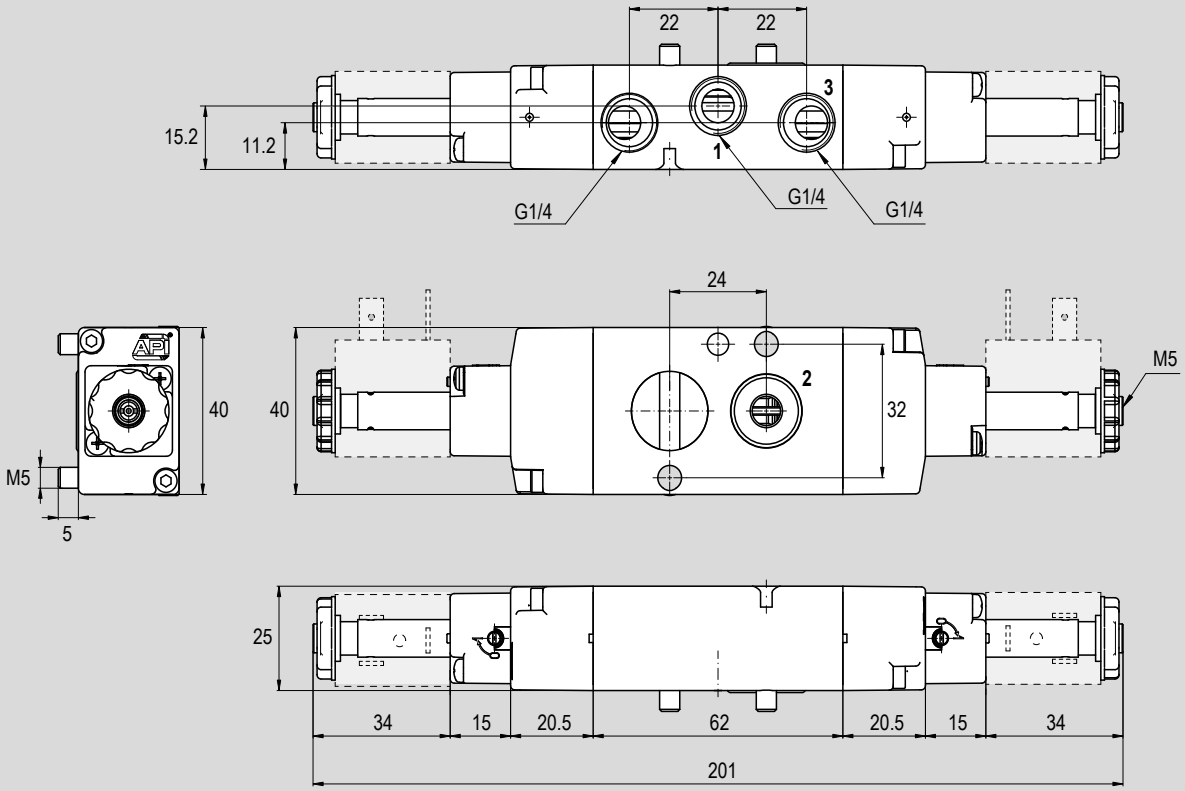

Version	Symbol	Code	Item
1/4" 3/2 solenoid/solenoid	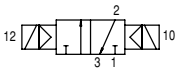	034060	A1NE232

NAMUR solenoid operated valves series A1N

1/4", 5/2 Solenoid/Spring

Main features

Version	Code	Item	Symbol
5/2 solenoid/spring	034057	A1NE250	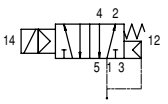



Technical data

Version		5/2 solenoid/spring
Code		034057
Item		A1NE250
Size		1/4"
Fluid		Compressed air with or without lubrication. Lubrication, if started, must be continued.
Pressure range		1,5 ÷ 10 bar
Temperature range		-10°C ÷ +60°C (standard) -25°C ÷ +60°C (BT)
Plunger Ø		9 mm
Orifice Ø		7 mm
Flow at 6 bar with ΔP 1 bar		1.000 Nl/min.
Mounting		In every position
Manual override		Bistable
Response time at 6 bar	Energizing	45 ms.
	De-energizing	19 ms.

Notes

Coils and connectors for standard versions to be ordered separately.
For coils type ASA12 and ASA2 see from page 2.315.1. For connectors type A122 e A182 see from page 2.318.1

For valves complete with ATEX coil and connector, in different classifications, see page 2.320.1

Standard dimensions

Type: **5/2 solenoid/spring**

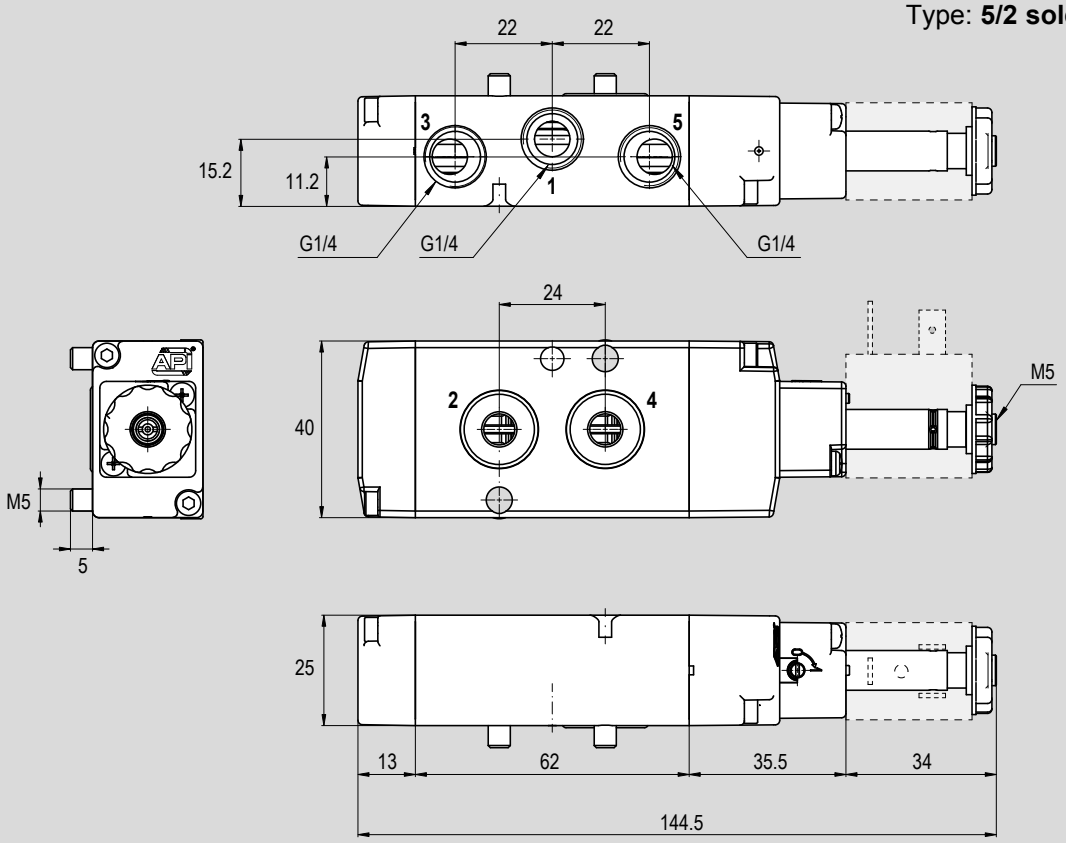

Version	Symbol	Code	Item
1/4" 5/2 solenoid/spring	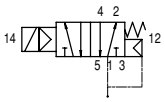	034057	A1NE250

NAMUR solenoid operated valves series A1N

1/4", 5/2 Solenoid/Solenoid

Main features

Version	Code	Item	Symbol
5/2 solenoid/solenoid	034058	A1NE251	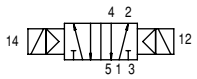



Technical data

Version		5/2 solenoid/solenoid
Code		034058
Item		A1NE251
Size		1/4"
Fluid		Compressed air with or without lubrication. Lubrication, if started, must be continued.
Pressure range		1 ÷ 10 bar
Temperature range		-10°C ÷ +60°C (standard) -25°C ÷ +60°C (BT)
Plunger Ø		9 mm
Orifice Ø		7 mm
Flow at 6 bar with ΔP 1 bar		1.000 Nl/min.
Mounting		In every position
Manual override		Bistable
Response time at 6 bar	Energizing	21 ms.
	De-energizing	21 ms.

Notes

Coils and connectors for standard versions to be ordered separately.
For coils type ASA12 and ASA2 see from page 2.315.1. For connectors type A122 e A182 see from page 2.318.1

For valves complete with ATEX coil and connector, in different classifications, see page 2.320.1

Standard dimensions

Type: **5/2 solenoid/solenoid**

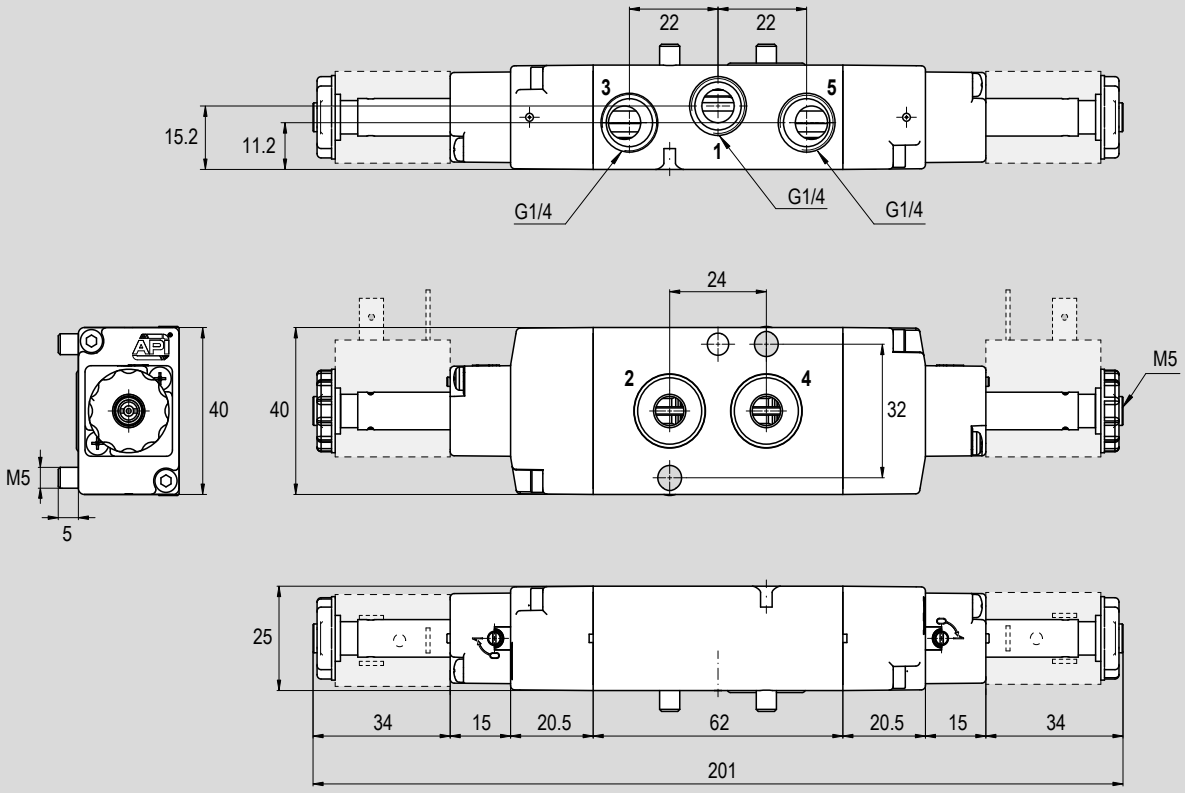

Version	Symbol	Code	Item
1/4" 5/2 solenoid/solenoid	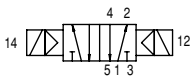	034058	A1NE251

NAMUR solenoid operated valves series A1N
1/4", 5/3

Main features

Version	Code	Item	Symbol
5/3 closed centres	034174	A1NE270	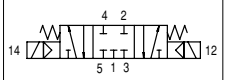
5/3 open centres	034179	A1NE271	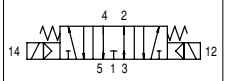
5/3 pressurized centres	034254	A1NE272	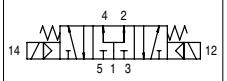



Technical data

Version		5/3 closed centres	5/3 open centres	5/3 pressurized centres
Code		034174	034179	034254
Item		A1NE270	A1E271	A1NE272
Size		1/4"		
Fluid		Compressed air with or without lubrication. Lubrication, if started, must be continued.		
Pressure range		2,5 ÷ 10 bar		
Temperature range		-10°C ÷ +60°C (standard) -25°C ÷ +60°C (BT)		
Plunger Ø		9 mm		
Orifice Ø		7 mm		
Flow at 6 bar with ΔP 1 bar		1.000 Nl/min.		
Mounting		In every position		
Manual override		Bistable		
Response time at 6 bar	Energizing	21 ms.		
	De-energizing	21 ms.		

Notes

Coils and connectors for standard versions to be ordered separately.
For coils type ASA12 and ASA2 see from page 2.315.1. For connectors type A122 e A182 see from page 2.318.1

For valves complete with ATEX coil and connector, in different classifications, see page 2.320.1

Standard dimensions

Type: **5/3 C.C.**
5/3 O.C.
5/3 P.C.

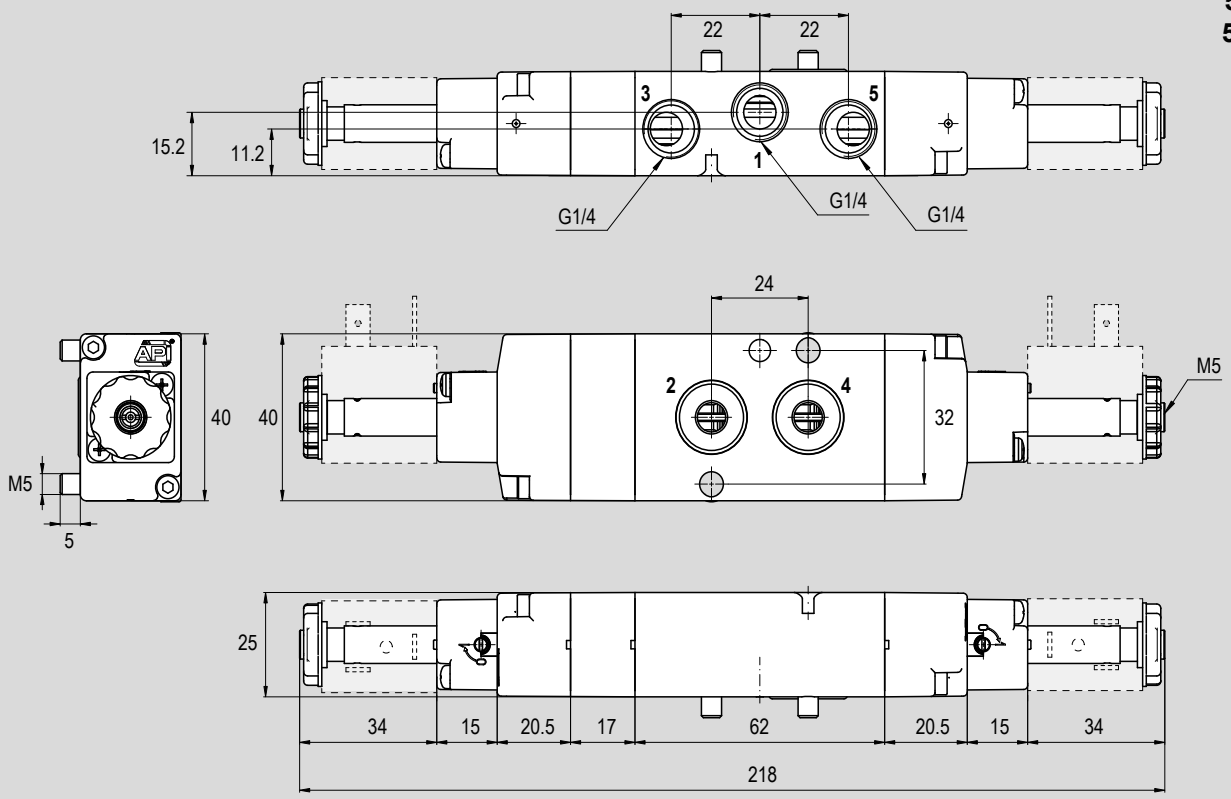

Version	Symbol	Code	Item
1/4" 5/3 closed centres	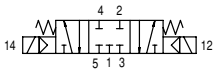	034174	A1NE270
1/4" 5/3 open centres	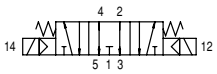	034179	A1NE271
1/4" 5/3 pressurized centres	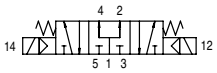	034254	A1NE272

Coils ASA12..



Voltage	Code	Item	Matching
12V DC	032100	ASA1201200	1/4"
12V AC	032101	ASA1201250	
24V DC	032102	ASA1202400	
24V AC	032103	ASA1202450	
48V AC	032104	ASA1204850	
110V AC	032105	ASA1211050	
230V AC	032106	ASA1223050	

Coils ASA2..*



Voltage	Code	Item	Matching
12V DC	032109	ASA201200	1/4"
12V AC	032110	ASA201250	
24V DC	032111	ASA202400	
24V AC	032112	ASA202450	
48V AC	032113	ASA204850	
110V AC	032114	ASA211050	
230V AC	032115	ASA223050	

* The valve direct mounting to another component require the plate type PSN (see below).

Connectors A122..*



Code	Item	Description
032118	A12209N	Black standard
033521	A12209NK	Black standard cabled
032204	A12209T1	LED+VDR transparent 24VAC-DC
032205	A12209T2	LED+VDR transparent 115VAC-DC
032206	A12209T3	LED+VDR transparent 230VAC-DC
033522	A12209N1K	LED+VDR black cabled 24VAC-DC
033523	A12209N2K	LED+VDR black cabled 115VAC-DC
033524	A12209N3K	LED+VDR black cabled 230VAC-DC

* For coils type ASA12

Connectors A182..**



Code	Item	Description
032119	A18209N	Black standard
033531	A18209NK	Black standard cabled
032207	A18209T1	LED+VDR transparent 24VAC-DC
032208	A18209T2	LED+VDR transparent 115VAC-DC
032209	A18209T3	LED+VDR transparent 230VAC-DC
033532	A18209N1K	LED+VDR black cabled 24VAC-DC
033533	A18209N2K	LED+VDR black cabled 115VAC-DC
033534	A18209N3K	LED+VDR black cabled 230VAC-DC

** For coils type ASA2

Plate for valves* PSN..



Code	Item	Matching (valve function)
034203	PSN3/2	3/2
034166	PSN5/2	5/2

* Required for valve direct mounting to another component, if the valve has a coil type ASA2.

Speed regulators for rotary actuators and valves, APNR..



Code	Item	Matching with actuator	Matching with valve
810153	APNRSR	AR..SE VSO..SE VSI..SE	3/2
810152	APNRDA	AR..DE VSO..DE VSI..DE	5/25/3

Notes

NAMUR

air operated valves Series A1N



Find out our
key products

- **Solution for most applications**
- **Easy and intuitive choice**
- **Excellent value for money**
- **Wide availability**
- **Fast delivery**

Features and certifications

Spool valves, with static seals, high flow, NAMUR interface. Available in size 1/4", air operated, with functions: 3/2 pilot/spring normally closed and pilot/pilot, 5/2 pilot/spring and pilot/pilot, 5/3 open centres, closed centres and pressurized centres.
These components are suitable for working with pneumatic rotary actuators series AR, see page 2.400.1
Supplied as standard in compliance to Reach and RoHS directives, and SIL certified. On request the valve body can be supplied according to 2014/34/EU ATEX Directive, classification Ex h.

Series A1N 1/4" 3/2 Pilot/Spring

from page 2.52.10



Series of spool valves, with static seals, high flow, NAMUR interface.
Available in size 1/4", 3/2 pilot/spring normally closed, air operated.

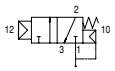

Series A1N 1/4" 3/2 Pilot/Pilot

from page 2.52.30



Series of spool valves, with static seals, high flow, NAMUR interface.
Available in size 1/4", 3/2 pilot/pilot, air operated.

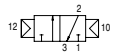

Series A1N 1/4" 5/2 Pilot/Spring

from page 2.52.50



Series of spool valves, with static seals, high flow, NAMUR interface.
Available in size 1/4", 5/2 pilot/spring, air operated.

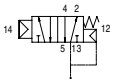

Series A1N 1/4" 5/2 Pilot/Pilot

from page 2.52.70



Series of spool valves, with static seals, high flow, NAMUR interface.
Available in size 1/4", 5/2 pilot/pilot, air operated.

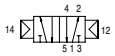

Series A1N 1/4" 5/3

from page 2.52.90



Series of spool valves, with static seals, high flow, NAMUR interface.
Available in size 1/4", 5/3 closed centres, 5/3 open centres and 5/3 pressurized centres,air operated.

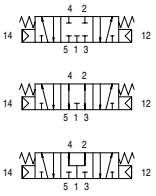

Options

Description		Symbol	Suffix
Low temperatures seals	-25°C ÷ +60°C		**BT**
ATEX valve body			**/ATEX**
Special versions on request			**/S**

The options, when this is possible, can be combined with each other. For options matching see the table below; For code key see from page 2.50.5

Options matching

Series	Size	Function		Standard options matching	
				BT	**/ATEX**
A1NP	1/4"	3/2	Pilot/Spring	●	●
			Pilot/Pilot	●	●
		5/2	Pilot/Spring	●	●
			Pilot/Pilot	●	●
		5/3		●	●

Key

● allowed matching; – not allowed matching

Standard materials

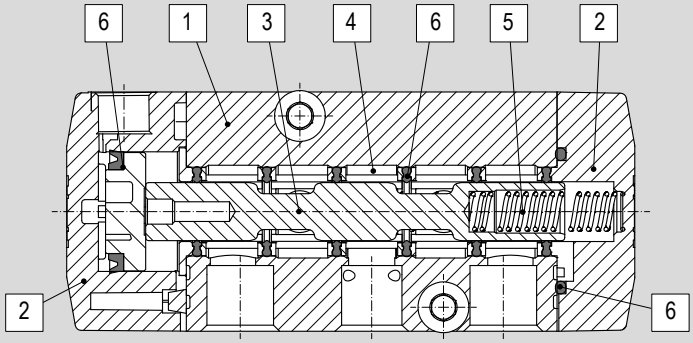

Position	Description	Material
		1/4"
1	Body	Die-cast painted aluminium
2	Covers	Tecnopolymer
3	Spool	Hard anodized aluminium
4	Distancers	Tecnopolymer
5	Spring	Spring steel
6	Seals	HNBR

Code key

Series	Actuation	Size	Function	Options	/	ATEX valve body
A1N	**P**	**2**	**50**		**/**	

- Series: A1N
- Actuation: P = Pneumatico
- Size: 2 = 1/4"
- Function:
  - 30 = 3/2 Normally closed
  - 32 = 3/2 Pilot/Pilot
  - 50 = 5/2 Pilot/Spring
  - 51 = 5/2 Pilot/Pilot
  - 70 = 5/3 Closed Centres
  - 71 = 5/3 Open Centres
  - 72 = 5/3 Pressurized Centres
- Options: BT = Low temperatures seals
- ATEX valve body: ATEX — II 2G Ex h IIB T5 Gb / II 2D Ex h IIIC T100°C Db

How to order

Series	Actuation	Size	Function	Option
A1N	**P**	**2**	**50**	**-**

Notes

Options in the same grid are alternative to each others.

For further information on options and their matching, see page 2.50.3

For further information on the ATEX 2014/34/EU Directive, on classifications and protections, see from page III.1

Accessories

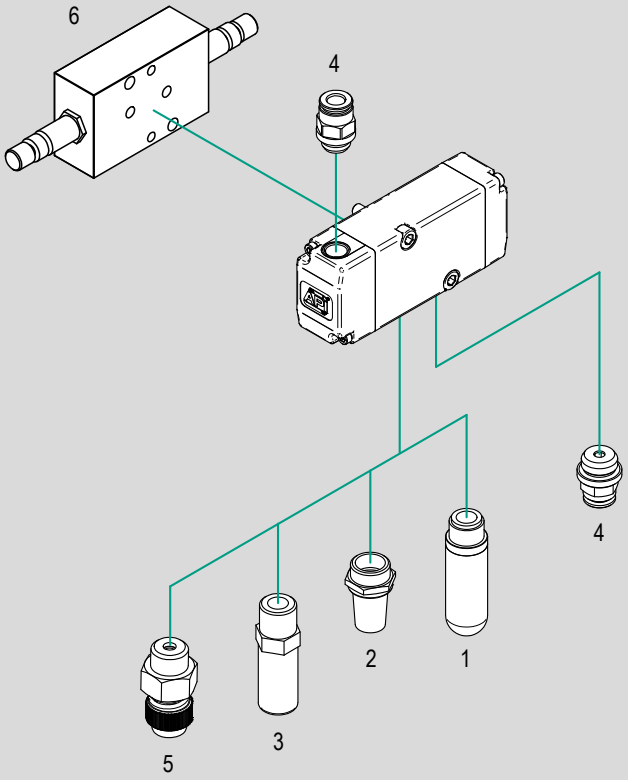

N.	Item	Description	Compliance	Matching	Code key page	Data sheet page
				1/4"		
1	AS..	Plastic silencers	-	●	4.151.10	
	SP..			●	4.151.20	
2	A..	Sintered silencers	-	●	4.153.10	
3	M..	Metal silencers	-	●	4.155.10	
4	R..	Push-in fittings	UNI ISO 228/1 UNI ISO7/1 ISO R/232	●	4.2.1	
5	A..	Silenced exhaust restrictors	-	●	4.97.1	
6	APNR..	Speed regulators for rotary actuators	NAMUR	●	2.54.1	2.430.1

Key
● matching accessory; – not matching accessory

NAMUR air operated valves series A1N

1/4", 3/2 Pilot/Spring

Main features

Version	Code	Item	Symbol
3/2 Normally closed	034238	A1NP230	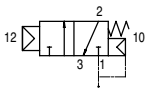



Technical data

Version	3/2 Normally closed
Code	034238
Item	A1NP230
Size	1/4"
Fluid	Compressed air with or without lubrication. Lubrication, if started, must be continued.
Pressure range	1,5 ÷ 10 bar
Temperature range	-10°C ÷ +60°C (standard) -25°C ÷ +60°C (BT)
Orifice Ø	7 mm
Flow at 6 bar with ΔP 1 bar	1.000 Nl/min.
Mounting	In every position

Standard dimensions

Type: **3/2 N.C.**

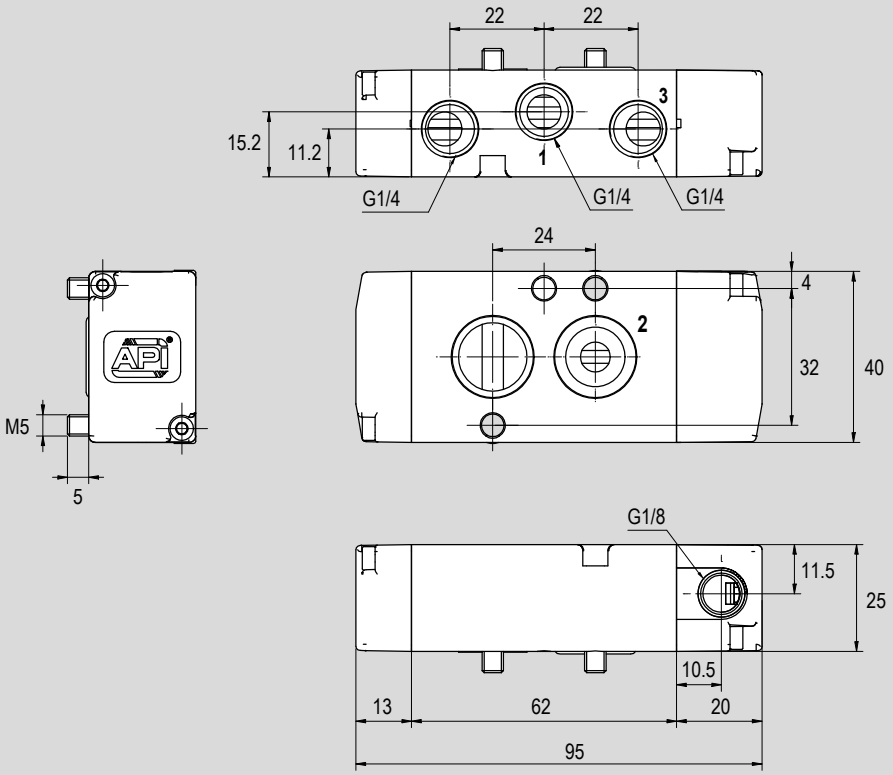

Version	Symbol	Code	Item
1/4" 3/2 Normally closed	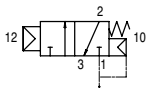	034238	A1NP230

NAMUR air operated valves series A1N
1/4", 3/2 Pilot/Pilot

Main features

Version	Code	Item	Symbol
3/2 pilot/pilot	034239	A1NP232	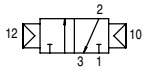



Technical data

Version	3/2 pilot/pilot
Code	034239
Item	A1NP232
Size	1/4"
Fluid	Compressed air with or without lubrication. Lubrication, if started, must be continued.
Pressure range	1 ÷ 10 bar
Temperature range	-10°C ÷ +60°C (standard) -25°C ÷ +60°C (BT)
Orifice Ø	7 mm
Flow at 6 bar with ΔP 1 bar	1.000 Nl/min.
Mounting	In every position

Standard dimensions

Type: **3/2 pilot/pilot**

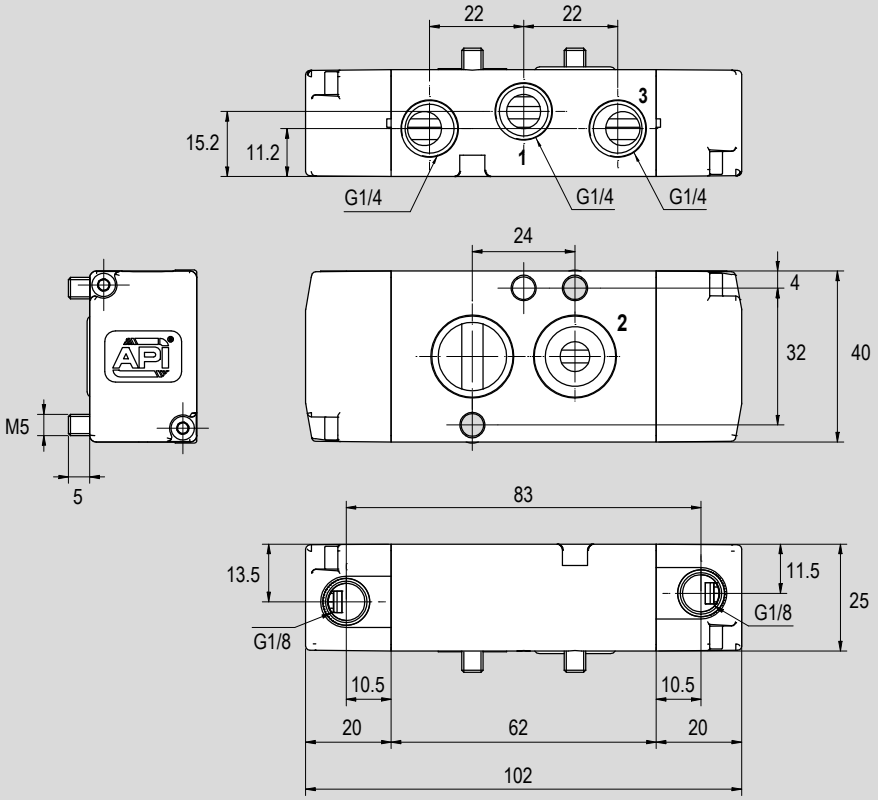

Version	Symbol	Code	Item
1/4" 3/2 pilot/pilot	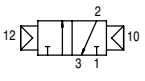	034239	A1NP232

NAMUR air operated valves series A1N
1/4", 5/2 Pilot/Spring

Main features

Version	Code	Item	Symbol
5/2 pilot/spring	034108	A1NP250	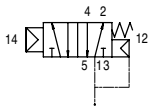



Technical data

Version	5/2 pilot/spring
Code	034108
Item	A1NP250
Size	1/4"
Fluid	Compressed air with or without lubrication. Lubrication, if started, must be continued.
Pressure range	1,5 ÷ 10 bar
Temperature range	-10°C ÷ +60°C (standard) -25°C ÷ +60°C (BT)
Orifice Ø	7 mm
Flow at 6 bar with ΔP 1 bar	1.000 Nl/min.
Mounting	In every position

Standard dimensions

Type: **5/2 pilot/spring**

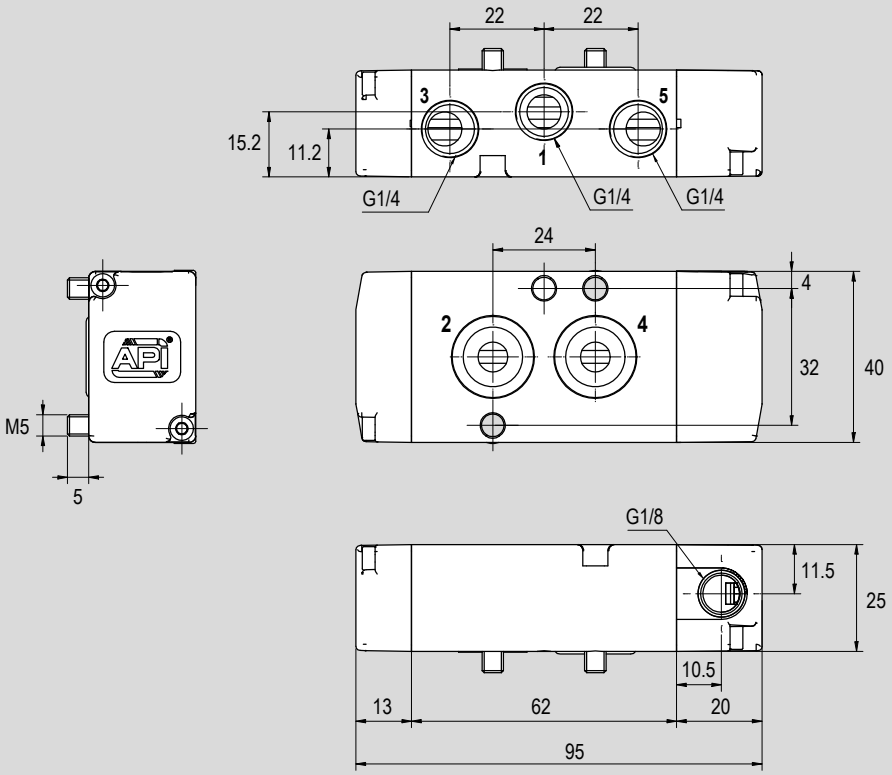

Version	Symbol	Code	Item
1/4" 5/2 pilot/spring	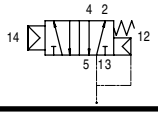	034108	A1NP250

NAMUR air operated valves series A1N
1/4", 5/2 Pilot/Pilot

Main features

Version	Code	Item	Symbol
5/2 pilot/pilot	034240	A1NP251	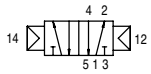



Technical data

Version	5/2 pilot/pilot
Code	034240
Item	A1NP251
Size	1/4"
Fluid	Compressed air with or without lubrication. Lubrication, if started, must be continued.
Pressure range	1 ÷ 10 bar
Temperature range	-10°C ÷ +60°C (standard) -25°C ÷ +60°C (BT)
Orifice Ø	7 mm
Flow at 6 bar with ΔP 1 bar	1.000 Nl/min.
Mounting	In every position

Standard dimensions

Type: **5/2 pilot/pilot**

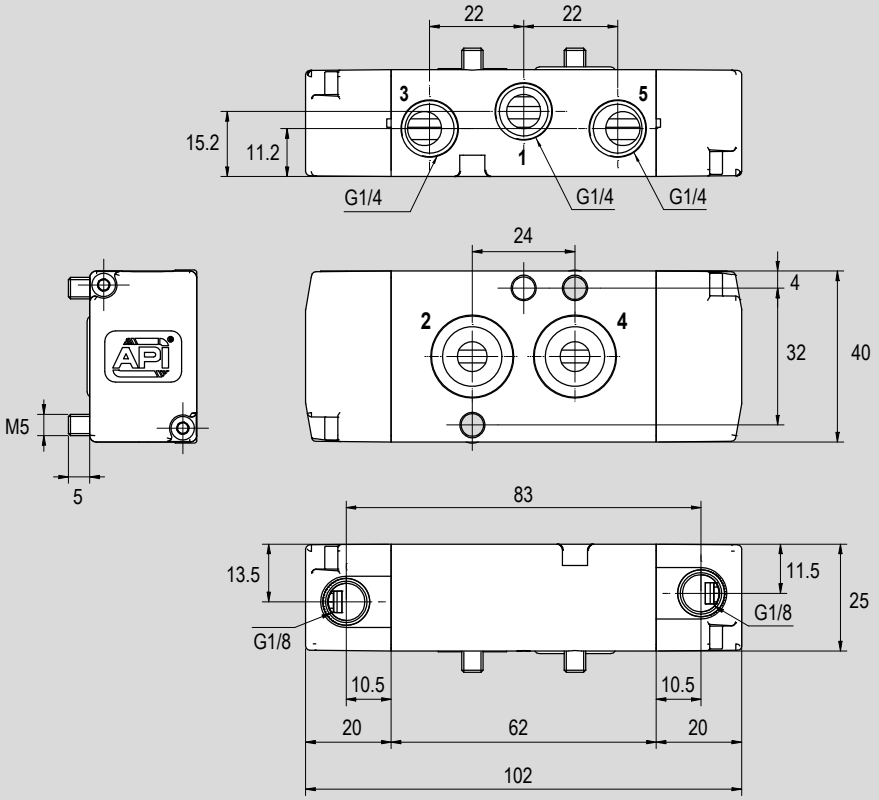

Version	Symbol	Code	Item
1/4" 5/2 pilot/pilot	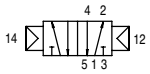	034240	A1NP251

NAMUR air operated valves series A1N
1/4", 5/3

Main features

Version	Code	Item	Symbol
5/3 closed centres	034251	A1NP270	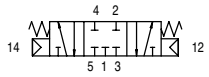
5/3 open centres	034252	A1NP271	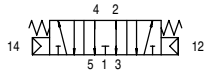
5/3 pressurized centres	034253	A1NP272	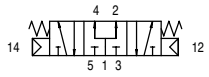



Technical data

Version	5/3 closed centres	5/3 open centres	5/3 pressurized centres
Code	034251	034252	034253
Item	A1NP270	A1NP271	A1NP272
Size	1/4"		
Fluid	Compressed air with or without lubrication. Lubrication, if started, must be continued.		
Pressure range	2,5 ÷ 10 bar		
Temperature range	-10°C ÷ +60°C (standard) -25°C ÷ +60°C (BT)		
Orifice Ø	7 mm		
Flow at 6 bar with ΔP 1 bar	1.000 Nl/min.		
Mounting	In every position		

Standard dimensions

Type: **5/3 C.C.**
5/3 O.C.
5/3 P.C.

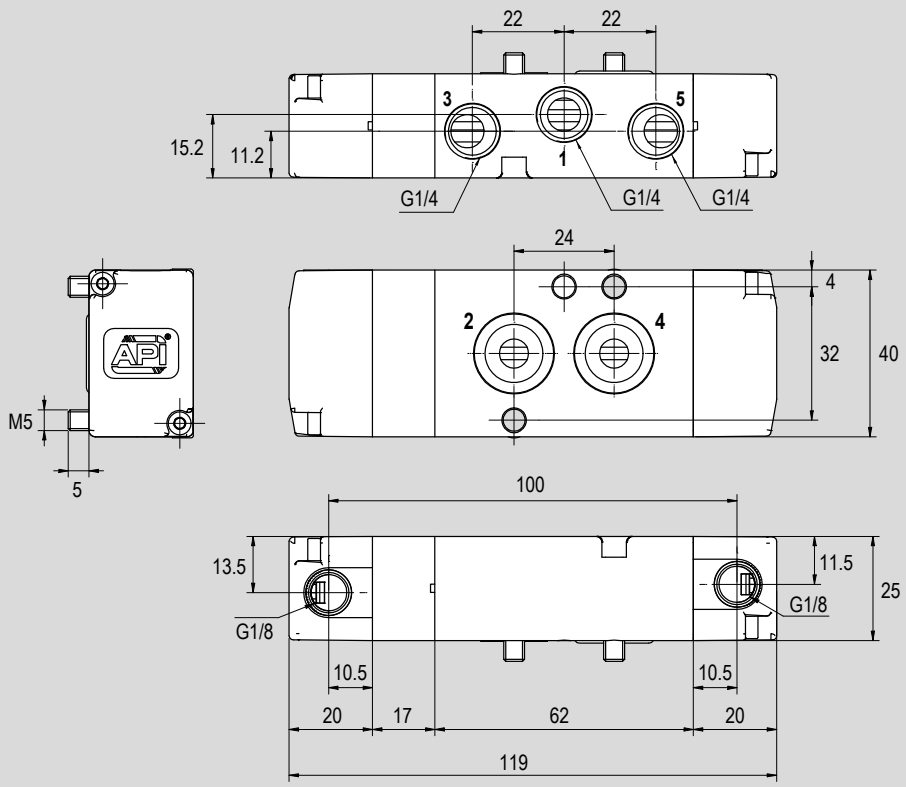

Version	Symbol	Code	Item
1/4" 5/3 closed centres	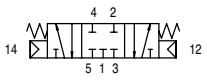	034251	A1NP270
1/4" 5/3 open centres	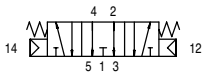	034252	A1NP271
1/4" 5/3 pressurized centres	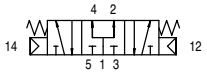	034253	A1NP272

Speed regulators for rotary actuators and valves, APNR..

	Code	Item	Matching with actuator	Matching with valve
	810153	APNRSR	AR..SE VSO..SE VSI..SE	3/2
	810152	APNRDA	AR..DE VSO..DE VSI..DE	5/2 5/3

Notes

MOUNTING PLATES

for rotary actuators and valves Series A1N

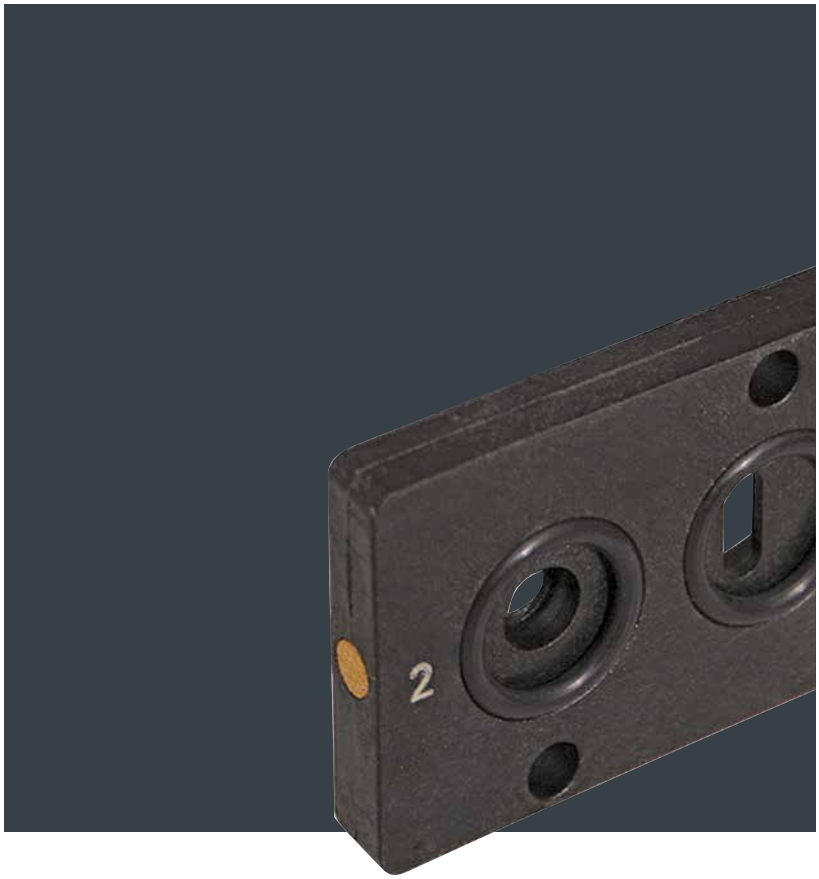

Find out our
key products

- **Solution for most applications**
- **Easy and intuitive choice**
- **Excellent value for money**
- **Wide availability**
- **Fast delivery**

Features and certifications

Plates for mounting NAMUR valves to rotary actuators, when valves are with coils thicker than the valve body.
Complete with screws and o-ring. Supplied as standard in compliance to Reach and RoHS directives.

Series PSN..

from page 2.56.10



Series of plates for mounting NAMUR valves to rotary actuators, when valves are with coils thicker than the valve body. These plates are with NAMUR interface compatible holes, and supplied complete with screws and o-ring.

Mounting plates for rotary actuators and valves series A1N
Series PSN

Main features

Version	Code	Item
Piastra for valves NAMUR 3/2	034203	PSN 3/2
Piastra for valves NAMUR 5/2	034166	PSN 5/2



Standard materials

Description	Material
Body	Nylon
Screws	Stainless Steel AISI 304
Seals	HNBR

Standard dimensions

Type: **PSN 3/2**

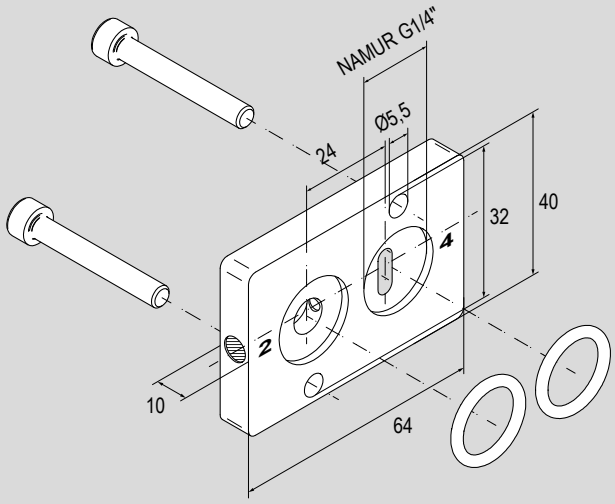

The kit include n. 2 screws and n. 1 O-ring

Type: **PSN 5/2**

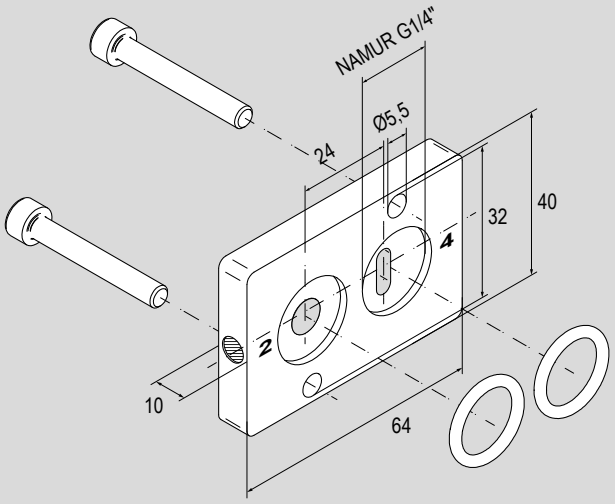

The kit include n. 2 screws and n. 2 O-rings

Notes

VALVE TERMINALS

Series A5

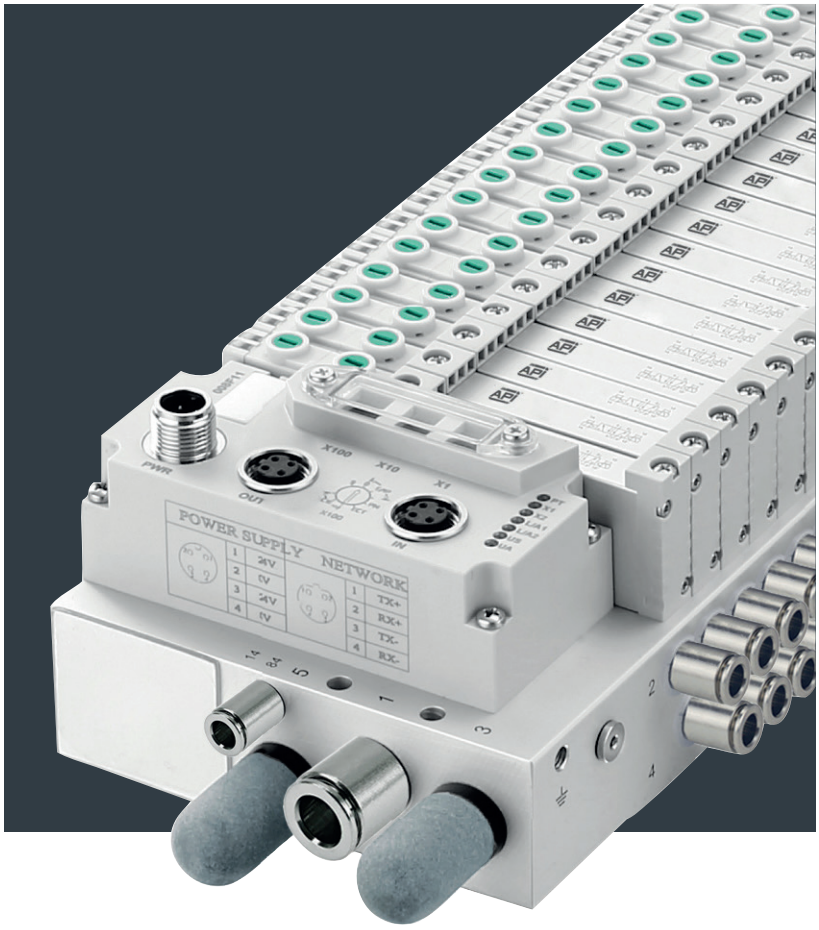

Find out our **key products**

- **Solution for most applications**
- **Easy and intuitive choice**
- **Excellent value for money**
- **Wide availability**
- **Fast delivery**

Features and certifications

Valve terminals available in sizes 10mm and 14mm. Three different modular interfaces can be applied to all sub-bases for configuring the type of communication: Fieldbus interface (with communication protocol configurable by choosing between ProfiNET®, EtherCAT®, EtherNET/IP® and CC-Link IE™ Field Basic, or with ProfiBUS® protocol), multipolar Sub-D interface and IO-Link® interface.
The solenoid valves are assembled in a simple and practical way. Each valve, even if in an intermediate position, can be easily replaced. The valve coils are low consumption (1.2W), with 360° view LED, equipped with "push" and bistable manual override.
The multiple sub-bases with set positions, from 4 to 24, and with the possibility of internal or external piloting to the solenoid valves by simply applying a screw or plug in the relevant connection. Blanking plugs for unused positions and diaphragms for separate feeding or exhausts are available.
Valve terminals are supplied complete (fittings, exhaust silencers and interface connection cables to be ordered separately), already assembled and tested.
Supplied as standard in compliance to Reach and RoHS directives.
The individual components necessary to compose a complete island can also be supplied separately.

Solenoid valves for valve terminals series A5

da pag. 2.71.1



Solenoid operated valves type A5V with sub-base connections for valve terminals series A5, available in size 10 mm and 14 mm, in different functions.
Low consumption coils (1.2W), with 360° view LED, equipped with "push" and bistable manual override.
These valves, compatible with sub-bases of the respective size and with all the available communication interfaces, are assembled to the sub-base in a simple and pratical way.

Sub-bases for valve terminals series A5

da pag. 2.72.1



Sub-bases type A5B for valve terminals series A5, available in sizes 10 mm and 14 mm, with set postion from 4 to 24 (4, 5, 6, 7, 8, 9, 10, 12, 14, 16, 20 or 24 stations). Equipped with integrated PCB, are compatible with all the available interfaces (Fieldbus, Multipolar Sub-D and IO-Link®), and with solenoid valves of the respective size.
Accessories such as plugs and screws for internal or external feeding, blanking plugs for unused positions, diaphragms for separated feeding and exhausts to be ordered separately.

Interfaces for valve terminals series A5

da pag. 2.73.1



Communication interfaces for valve terminals series A5. Available in three different types: Fieldbus interface (with communication protocol configurable by choosing between ProfiNET®, EtherCAT®, EtherNET/IP® and CC-Link IE™Field Basic, or with ProfiBUS® protocol); multipole Sub-D 25 poles interface; IO-Link® interface in version 8, 16 or 24 (depending on the maximum number of manageable valves).
Connection cables to be ordered separately.

Complete valve terminals series A5

da pag. 2.74.1



Complete valve terminals, available in sizes 10mm and 14mm, with sub-bases with set positions (from 4 to 24 stations) and with communication interface type Fieldbus (with communication protocol configurable by choosing between ProfiNET®, EtherCAT®, EtherNET/IP® and CC-Link IE™Field Basic, or with ProfiBUS® protocol), Sub-D or IO-Link®.
Valve terminals are supplied already assembled and tested.
Fittings, exhaust silencers, communication calbles for interface and accessories for sub-bases are to be ordered separately.

Accessories for valve terminals series A5

da pag. 2.75.1



Accessories for sub-bases such as plugs and screws for internal or external feeding, blanking plugs for unused positions, diaphragms for separated feeding and exhausts.
Cables compatibles with modular communication interfaces type Fieldbus, Sub-D 25 poles and IO-Link®, available in different types and configurations.

Code key

Series	Size	Communication	Positions	Piloting[1]	Valve type	Valve sequence[2]	/	Plugs[2]	/	Diaphragms[2]
A5	**14**	**07**	**09**	**E**	**B**	**1C2D4S**	**/**	**2T0409**	**/**	**AR0405**

- A5
- 10 = 10 mm
- 14 = 14 mm
- 01 = Fieldbus ProfiNET®
- 02 = Fieldbus EtherCAT®
- 03 = Fieldbus EtherNET/IP®
- 04 = Fieldbus CC-Link IE™Field Basic
- 09 = Fieldbus ProfiBUS®
- 05 = Sub-D 25 poles
- 06 = IO-Link® (up to 8 managed valves)
- 07 = IO-Link® (up to 16 managed valves)
- 08 = IO-Link® (up to 24 managed valves)
- 04 = 4 positions
- 05 = 5 positions
- 06 = 6 positions
- 07 = 7 positions
- 08 = 8 positions
- 09 = 9 positions
- 10 = 10 positions
- 12 = 12 positions
- 14 = 14 positions
- 16 = 16 positions
- 20 = 20 positions
- 24 = 24 positions
- E = External
- I = Internal
- B = Sub-bases valve
- L[3] = Semi in-line valve
- C = 5/3 closed centres
- E = 5/3 open centres
- P = 5/3 pressurized centres
- D = 5/2 solenoid/solenoid
- F = 2-3/2 N.C.
- G = 2-3/2 N.O.
- H = 2-3/2 N.C.-N.O.
- S = 5/2 solenoid/spring
- T = Plug
- A = Feeding diaphragm
- R = Exhaust diaphragm

Important note

The desired valves has to be inserted in the code key as per the sequence indicated in the table:
first 5/3, then 5/2 sol./sol., then 2-3/2, finally 5/2 sol./spring.

How to order[4]

Series	Size	Communication	Positions	Piloting	Valve type	Valve sequence		Plugs		Diaphragms
A5	**14**	**07**	**09**	**E**	**B**	**1C2D4S**	**/**	**2T0409**	**/**	**AR0405**

Notes

For standard materials see from page 2.70.7

For selection and configuration of the valve island, see from page 2.70.4

(1) For further information on internal or external piloting, see page 2.70.6

(2) For further information on valves sequence and position, on plugs and diaphragms sequence and position, see from page 2.70.4

(3) For semi in-line valves, please contact the sales department.

(4) Order example for 9 position sub-base, size 14mm, external piloting, IO-Link® 16 communication interface and the following solenoid valves assembled starting from the feeding/communication module: one element with 5/3 closed centres function, two elements with 5/2 solenoid/solenoid function, one plug for unused position, diafraghm for separated feeding and diaphragms for separated exhausts, four elements with 5/2 solenoid/spring function and one plug for unused position.

Selection

Parameters for selection of the valve terminal:

- **size**: for flow rates up to 300 l/min size 10 mm, for flow rates up to 600 l/min size 14 mm;
- **the communication module**, available in Fieldbus interfaces (with communication protocol configurable by choosing between ProfiNET®, EtherCAT®, EtherNET/IP® and CC-Link IE™Field Basic, or with ProfiBUS® protocol), multipole Sub-D and IO-Link® (in version 8, 16 and 24 depending on the maximum number of manageable valves);
- **the number of positions on the sub-base**, from 4 to 24 positions, available: 4, 5, 6, 7, 8, 9, 10, 12, 14, 16, 20 or 24 stations;
- **the internal or external piloting** of the valve terminal, which in any case is always switchable (see page 2.70.6);
- **the number and functions of solenoid valves** needed in the application, the blanking plugs for any unused position and diaphragms for separated feedings and/or exhausts.

For the configuration and sequence of the different elements, please refer to the relevant tables on this page.

Elements configuration

The solenoid valves are indicated with a letter, while the quantity with a number. The sequence in which they will be assembled on the sub-base is intended starting from the communication interface module.
The priority in the suffix and the positioning on the sub-base is given by the order inside the grid, from top to bottom, preceded by the indication of the number of valves required.
If is necessary to apply blanking plugs for unused positions, please indicate after the slash bar the number of elements required, the suffix "T", and the desired position on the base.
If is necessary to apply diaphragms to separate feedings and/or exhausts, please indicate after the slash bar the number of elements required, the suffix "A" for the separated feeding diaphragms and/or the suffix "R" for the separated exhausts diaphragms, and the desired position on the base.
For further information on the separated feeding and exhausts, please see page 2.70.6

The island configured in this way will be supplied complete (fittings, exhaust silencers and interface connection cables to be ordered separately), assembled and tested.

Elements assembly

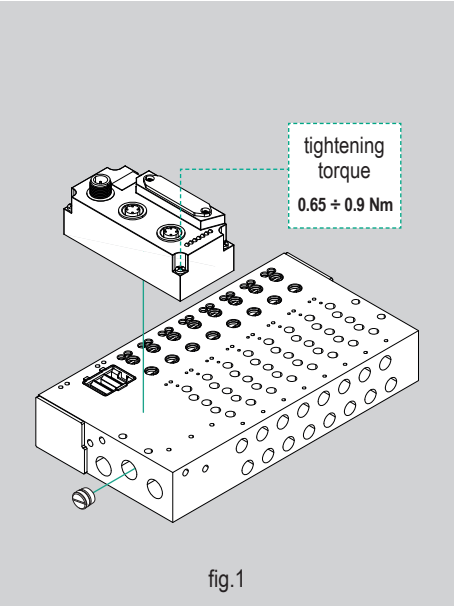

fig.1

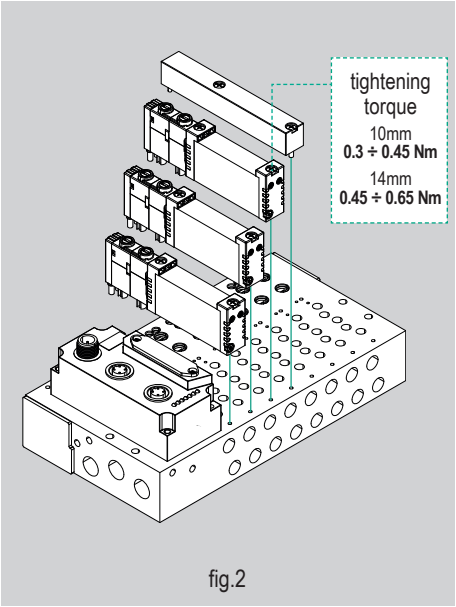

fig.2

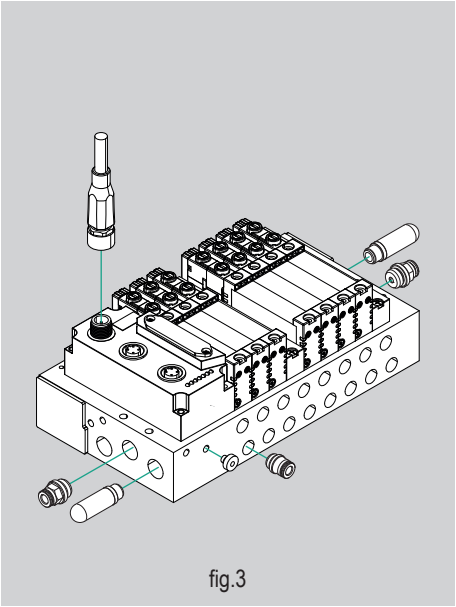

fig.3

If is required to assemble the valve terminal, install as the first element the communication module and any diaphragms for separate feedings or exhausts (see fig.1). For configuration and assembly of diaphragms, please see page 2.70.6

Then proceed installing the individual valves and any plugs for unused positions where applicable, always starting from the interface (see fig.2) following the order indicated in the table at page 2.70.5

Finally apply fittings, silencers and cables (see fig.3). For piloting configuration, please see page 2.70.6
Fittings, silencers, cables and accessories, to be ordered separately, see page 2.70.8

Elements sequence example

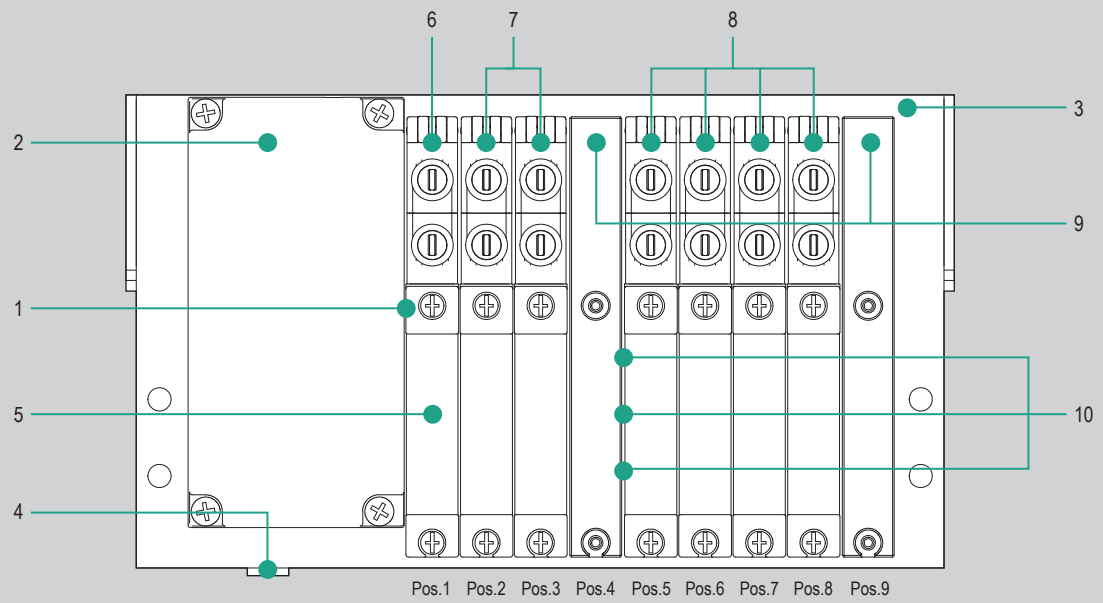

1	2	3	4	5	6	7	8		9					10		
A5	14	07	09	E	B	1 C	2 D	4 S	/	2	T	04	09	/	A	R	0405

N.	Sequence type	Sequence		Description
1	Valve terminal features	14 — Terminal size		Size 14 mm
2		07 — Module type		Feeding/communication module IO-Link® up to 16 managed valves
3		09 — Position number		9 positions on sub-base
4		E — Piloting type		External piloting
5		B — Valve type		Sub-base valve
6	Sequence at set positions (valves) The desired valves has to be inserted in the code key as per the sequence indicated in the table1: first 5/3, then 5/2 sol./sol., then 2-3/2, finally 5/2 sol./spring.	Elements number 1 C Valve function	(Table1) C = 5/3 closed centres E = 5/3 open centres P = 5/3 pressurized centres D = 5/2 solenoid/solenoid F = 2-3/2 N.C. G = 2-3/2 N.O. H = 2-3/2 N.C.-N.O. S = 5/2 solenoid/spring	1 valve 5/3 closed centres
7		Elements number 2 D Valve function		2 valves 5/2 solenoid/solenoid
8		Elements number 4 S Valve function		4 valves 5/2 solenoid/spring
9	Positionable sequence (plugs)	Elements type; Elements number 2 T 04 09 (2nd element position; 1st element position)	T = Plug A = Feeding diaphragm R = Exhaust diaphragm	2 plugs in position 04 and 09
10	Positionable sequence (diaphragms)	Elements type A R 0405 Elements position		Diaphragms for separated feeding and exhaust positioned between 04 and 05

Piloting configuration

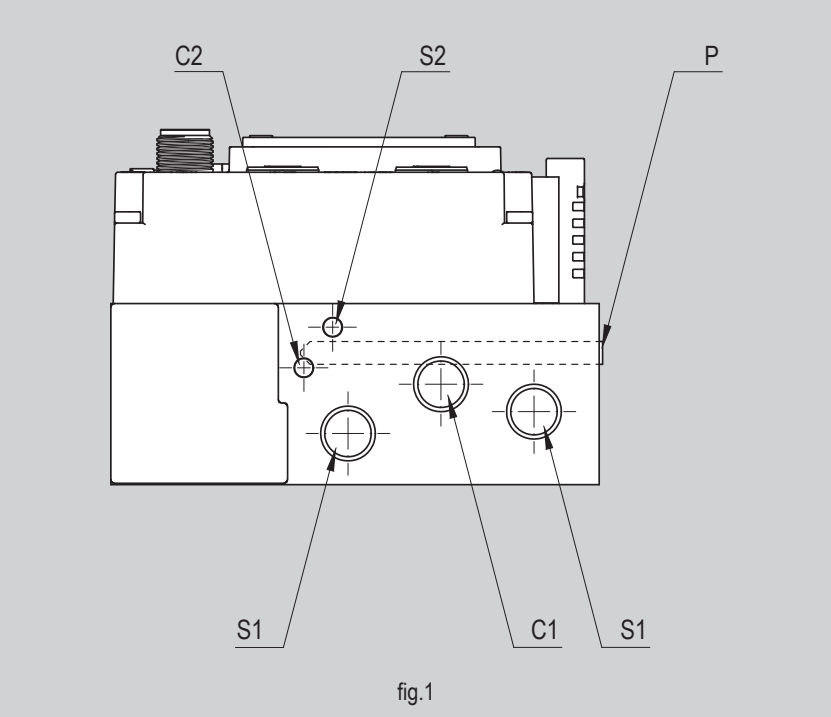

fig.1

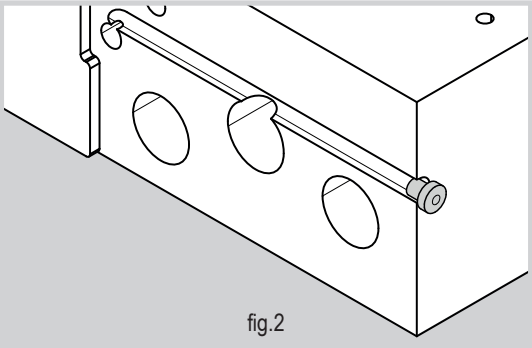
fig.2

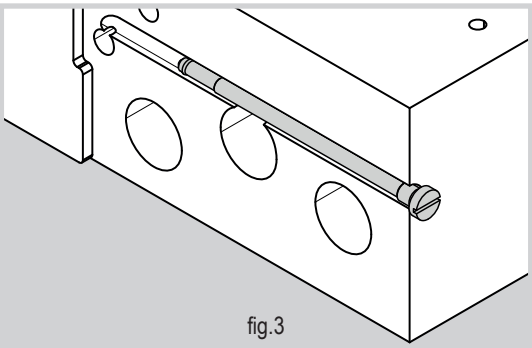
fig.3

The A5 series valve terminals can be supplied with internal or external piloting. However, it's always possible to change the piloting from internal to external and vice versa by replacing the relevant component in the switching connection P (fig.1).

To switch internal piloting into external piloting, replace the plug type A0090505 (fig.2) with the screw type A5BAV (fig.3) to be ordered separately, see page 2.75.20. For feeding use the connection C2, for the exhaust use connection S2 (fig.1).

To switch external piloting into internal piloting, replace the screw type A5BAV (fig.3) with the plug type A0090505 (fig.2) to be ordered separately, see page 2.75.20. Feeding will be from the main connection C1 (fig.1).

The connections no longer used can be blanked with plugs, to be ordered separately, see page 2.75.21

Configuration of separated feeding and exhausts

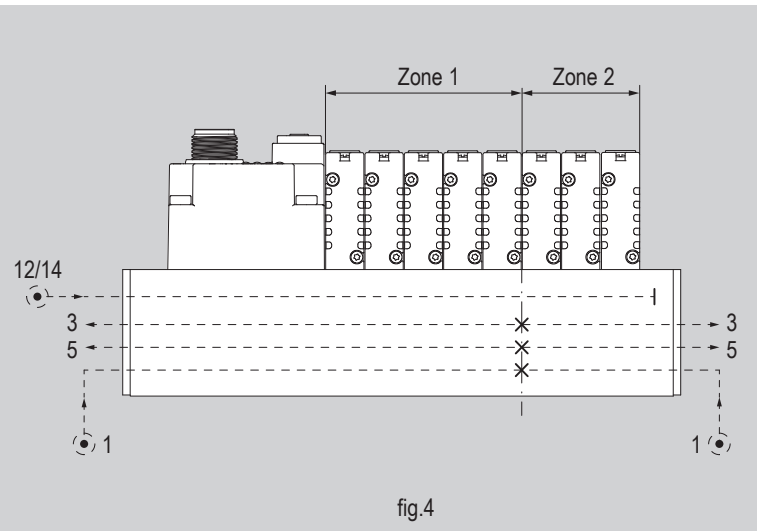

fig.4

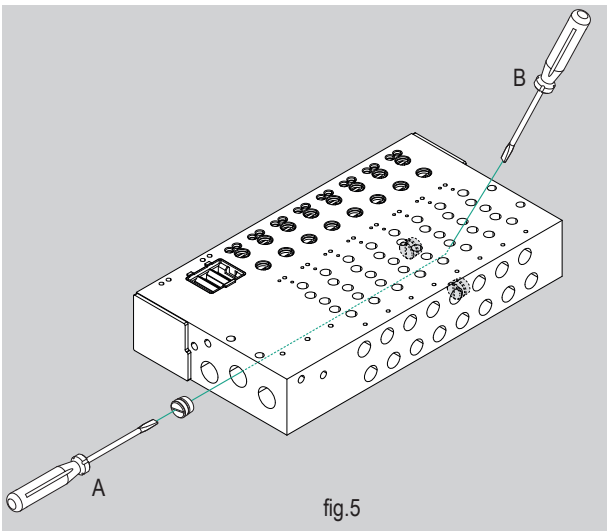

fig.5

If needed is possible to separate the feedings and/or the exhausts (see fig.4).
For this configuration, use the blanking diaphragms type A5BMC, to be ordered separately, see page 2.75.20

Mounting: the diaphragm will have to be mounted in the sub-base through the feeding or exhaust connection, inserting it with the slotted screwdriver "A" until reaching the desired position, identified thanks to the screwdriver "B", then locking it by rotating the screwdriver "A", as shown in the example in fig.5.

Solenoid valves standard materials

Type: **A5V..**

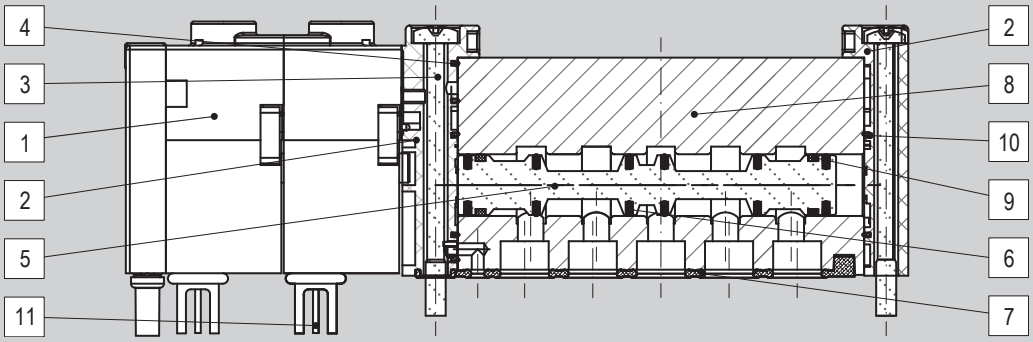

Position	Description	Material
1	Electric pilot	Technopolymer
2	Cover	Aluminum
3	Mounting screws	Steel
4	Cover seal	NBR
5	Spool	Aluminum
6	O-ring	NBR
7	Seal	NBR
8	Body	Aluminum
9	O-ring	NBR
10	Cover seal	NBR
11	Electrical contacts	Copper alloy

Sub-bases standard materials

Type: **A5B..**

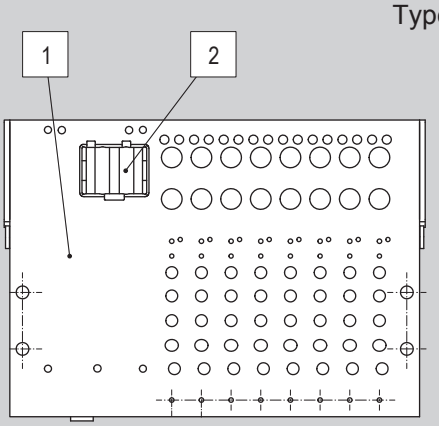

Position	Description	Material
1	Body	Anodized aluminium
2	PCB	Coppered vetronite
-	Electrical contacts	Copper alloy

Interfaces standard materials

Type: **A50..**

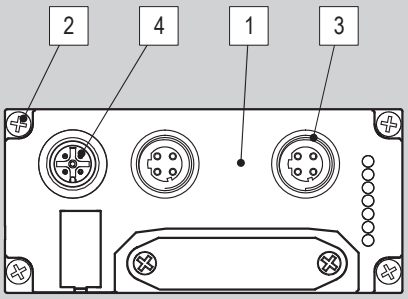

Position	Description	Material
1	Body	Polymer
2	Mounting screws	Steel
3	Connectors	Brass
4	Electrical contacts	Copper alloy

Individual components and accessories

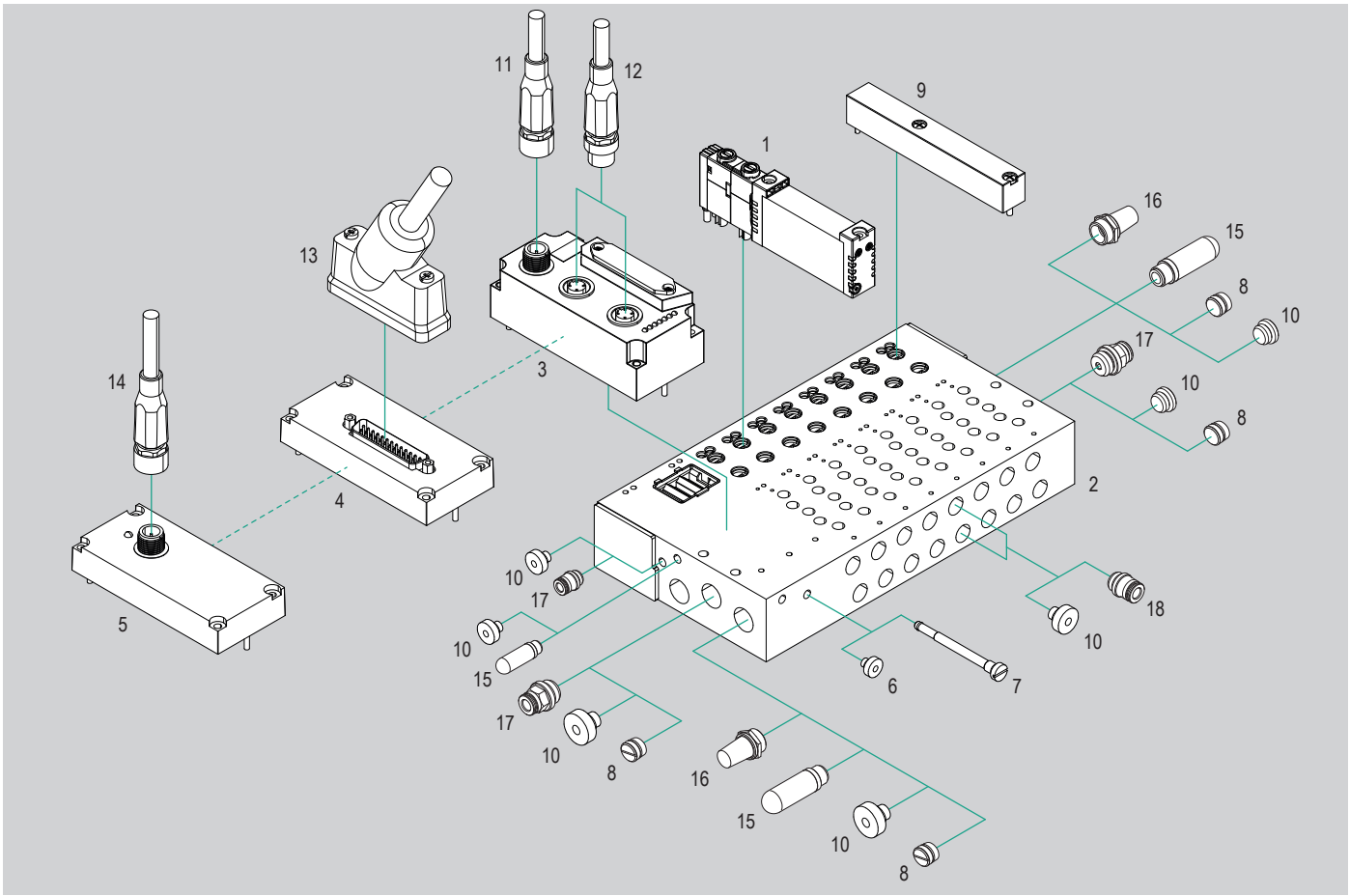

N.	Item	Description	Matching with valve terminals			Code key page	Data sheet page
			A5 Fieldbus	A5 Sub-D	A5 IO-Link®		
1	A5V10..	Solenoid valve 10 mm	●	●	●	2.71.10	
	A5V14..	Solenoid valve 14 mm	●	●	●	2.71.20	
2	A5B10..	Multiple sub-base 10mm with set position and integrated PCB	●	●	●	2.72.10	
	A5B14..	Multiple sub-base 14mm with set position and integrated PCB	●	●	●	2.72.20	
3	A501 ÷ A504	Fieldbus® interface communication module	●	-	-	2.73.10	
	A509		●	-	-	2.73.15	
4	A505	Multipole Sub-D interface communication module	-	●	-	2.73.20	
5	A506 ÷ A508	IO-Link® interface communication module	-	-	●	2.73.30	
6	A0090505	Plug for internal piloting	●	●	●	2.75.20	
7	A5BAV	Screw for external piloting	●	●	●		
8	A5BMC..	Blanking diaphragm for separating feedings or exhausts	●	●	●		
9	A5BTC..	Blanking plug for unused positions	●	●	●	2.75.21	
10	A009..	Blanking plug for feedings, exhausts and outlets	●	●	●		
11	CAVFBFD..	Power supply cable for Fieldbus® interface	●	-	-	2.75.40	
12	CAVFB..	Connection cable for Fieldbus® interface	●	-	-	2.75.40	
13	CAVSDFD..	Connection cable for Sub-D interface	-	●	-	2.75.43	
14	CAVILFD..	Connection cable for IO-Link® interface	-	-	●	2.75.44	
15	AS..	Plastic silencers	●	●	●	4.151.10	
	SP..		●	●	●	4.151.20	
16	A..	Sintered silencers	●	●	●	4.153.10	
17	R..	Push-in fittings for air supply or piloting	●	●	●	4.2.1	
18	RT12..M7	Push-in fittings for outlets (sub-bases 10 mm)	●	●	●	2.75.22	4.7.4
	R12..M7	Push-in fittings for outlets (sub-bases 14 mm)	●	●	●		4.3.5

Key
● matching accessory; - not matching accessory

SOLENOID VALVES

for valve terminals series A5

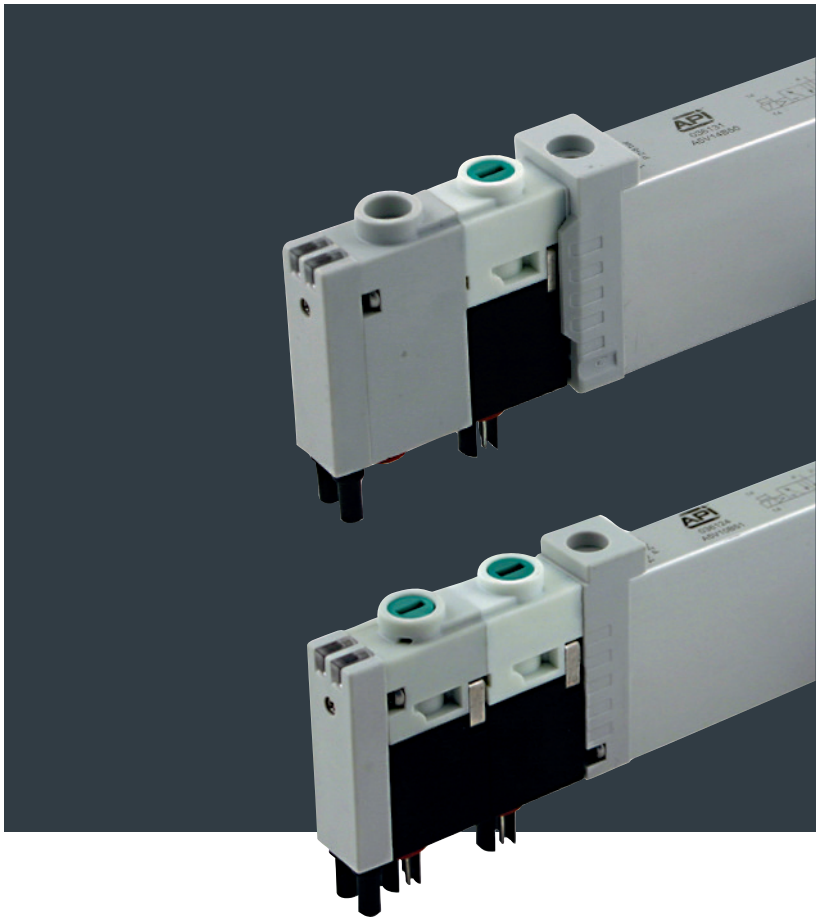

Features and certifications

Sub-base solenoid valves for valve terminals series A5, available in sizes 10 mm and 14 mm, in different functions (5/2, 5/3 and 2-3/2). Compatible with respective size sub-bases (see from page 2.72.1). Solenoid valves are assembled in a simple and practical way. Each valve, even if in an intermediate position, can be easily replaced.
Equipped with low consumption coils (1.2W), with 360° view LED and with "push" and bistable manual override.
Supplied as standard in compliance to Reach and RoHS directives.

Solenoid valves type A5V10.. 5/2

from page 2.71.10



Solenoid valves size 10 mm with sub-base connections for valve terminals series A5, available in functions 5/2 solenoid/spring and 5/2 solenoid/solenoid.
Easy and pratical mounting, low consumption coils (1,2W), 360° view LED and equipped with "push" and bistable manual override.
Compatible with sub-bases size 10 mm and with all the communication interfaces.

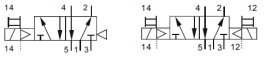

Solenoid valves type A5V10.. 5/3

from page 2.71.10



Solenoid valves size 10 mm with sub-base connections for valve terminals series A5, available in functions 5/3 closed centres, 5/3 open centres and 5/3 pressurized centres.
Easy and pratical mounting, low consumption coils (1,2W), 360° view LED and equipped with "push" and bistable manual override.
Compatible with sub-bases size 10 mm and with all the communication interfaces.

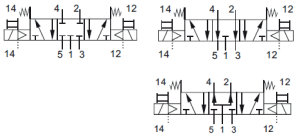

Solenoid valves type A5V10.. 2-3/2

from page 2.71.10



Solenoid valves size 10 mm with sub-base connections for valve terminals series A5, available in functions 2-3/2 normally closed-normally closed, 2-3/2 normally open-normally open and 2-3/2 normally closed-normally open.
Easy and pratical mounting, low consumption coils (1,2W), 360° view LED and equipped with "push" and bistable manual override.
Compatible with sub-bases size 10 mm and with all the communication interfaces.

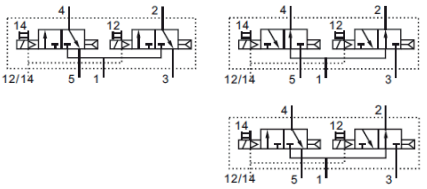

Solenoid valves type A5V14.. 5/2

from page 2.71.20



Solenoid valves size 14 mm with sub-base connections for valve terminals series A5, available in functions 5/2 solenoid/spring and 5/2 solenoid/solenoid.
Easy and pratical mounting, low consumption coils (1,2W), 360° view LED and equipped with "push" and bistable manual override.
Compatible with sub-bases size 14 mm and with all the communication interfaces.

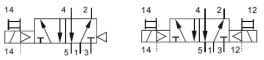

Solenoid valves type A5V14.. 5/3

da pag. 2.71.20



Solenoid valves size 14 mm with sub-base connections for valve terminals series A5, available in functions 5/3 closed centres, 5/3 open centres and 5/3 pressurized centres.
Easy and pratical mounting, low consumption coils (1,2W), 360° view LED and equipped with "push" and bistable manual override.
Compatible with sub-bases size 14 mm and with all the communication interfaces.

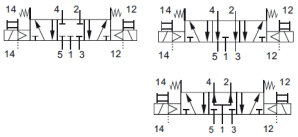

Solenoid valves type A5V14.. 2-3/2

from page 2.71.20



Solenoid valves size 14 mm with sub-base connections for valve terminals series A5, available in functions 2-3/2 normally closed-normally closed, 2-3/2 normally open-normally open and 2-3/2 normally closed-normally open.
Easy and pratical mounting, low consumption coils (1,2W), 360° view LED and equipped with "push" and bistable manual override.
Compatible with sub-bases size 14 mm and with all the communication interfaces.

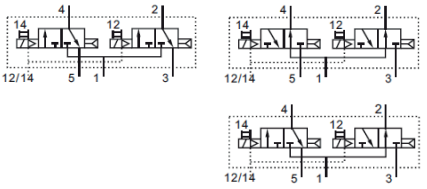

Solenoid valves for valve terminals series A5

Type A5V10, size 10 mm

Main features

Version	Code	Item	Symbol
Solenoid valve 10 mm 5/2 solenoid/spring	036123	A5V10B50	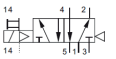
Solenoid valve 10 mm 5/2 solenoid/solenoid	036124	A5V10B51	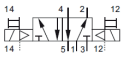
Solenoid valve 10 mm 5/3 closed centres	036125	A5V10B70	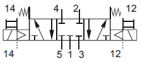
Solenoid valve 10 mm 5/3 open centres	036126	A5V10B71	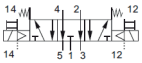
Solenoid valve 10 mm 5/3 pressurized centres	036127	A5V10B72	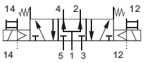
Solenoid valve 10 mm 2-3/2 Normally Closed-Normally Open	036120	A5V10B33	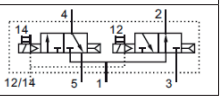
Solenoid valve 10 mm 2-3/2 Normally Closed-Normally Closed	036121	A5V10B34	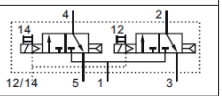
Solenoid valve 10 mm 2-3/2 Normally Open-Normally Open	036122	A5V10B35	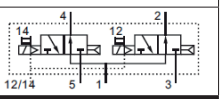



Technical data

Version	5/2		5/3			2-3/2		
Item	A5V10B50	A5V10B51	A5V10B70	A5V10B71	A5V10B72	A5V10B33	A5V10B34	A5V10B35
Code	036123	036124	036125	036126	036127	036120	036121	036122
Function	5/2 sol./spring	5/2 sol./sol.	5/3 C.C.	5/3 O.C.	5/3 P.C.	2-3/2 N.C.-N.O.	2-3/2 N.C.-N.C.	2-3/2 N.O.-N.O.
Fluid	Compressed air with or without lubrication. Lubrication, if started, must be continued.							
Size	10 mm							
Temperature range	-5°C ÷ +60°C							
Pressure range	2 ÷ 8 bar		3 ÷ 8 bar			2,5 ÷ 8 bar		
Flow at 6 bar with ΔP 1bar	300 l/min							
Voltage	24 VDC							
Electrical consumption	1,2 W							
Duty cycle	100% ED							
Manual override	"Push" and bistable							
Control indicator	LED							
Sub-base matching	A5B10..							

Notes

For possible configurations of valve terminals see from page 2.70.3;

(1) For 10 mm sub-bases features see from page 2.72.20

Standard dimensions

Type: **A5V10B50**

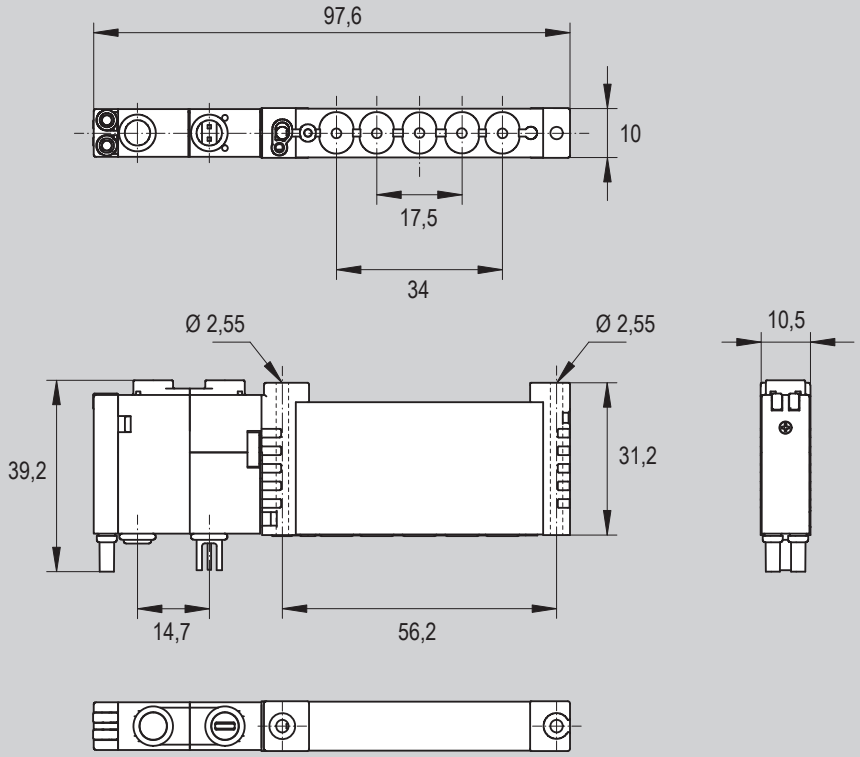

Version	Symbol	Code	Item
10 mm 5/2 solenoid/spring	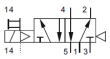	036123	A5V10B50

Standard dimensions

Type: **A5V10B51**
A5V10B70
A5V10B71
A5V10B72
A5V10B33
A5V10B34
A5V10B35

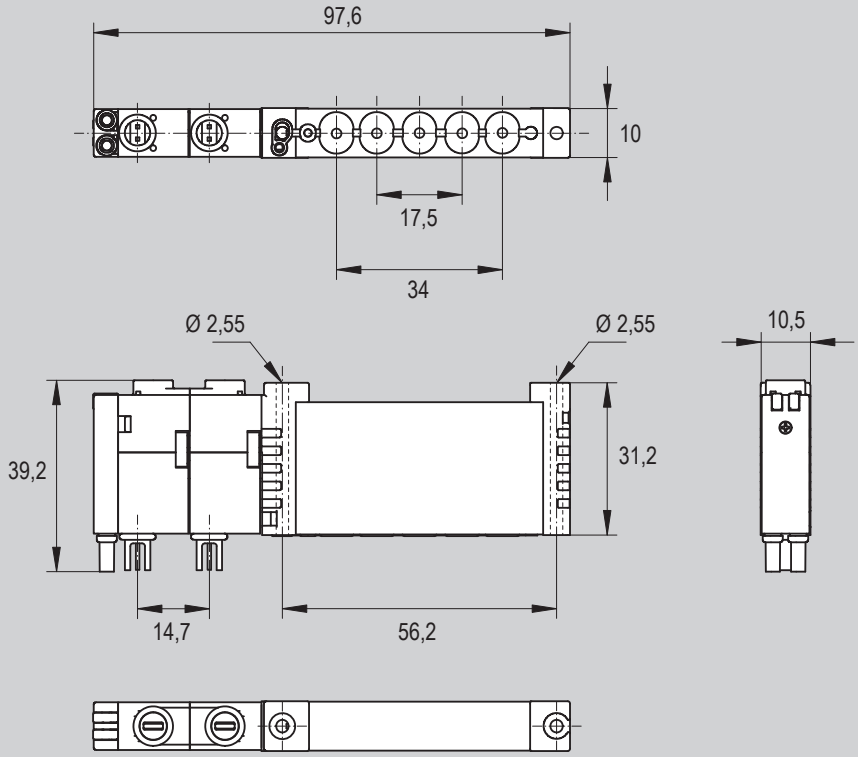

Version	Symbol	Code	Item
10 mm 5/2 solenoid/solenoid	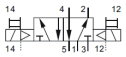	036124	A5V10B51
10 mm 5/3 closed centres	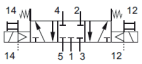	036125	A5V10B70
10 mm 5/3 open centres	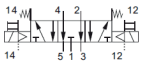	036126	A5V10B71
10 mm 5/3 pressurized centres	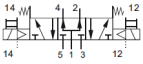	036127	A5V10B72
10 mm 2-3/2 normally closed-normally open	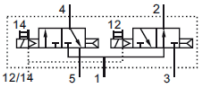	036120	A5V10B33
10 mm 2-3/2 normally closed-normally closed	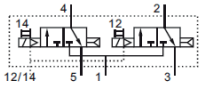	036121	A5V10B34
10 mm 2-3/2 normally open-normally open	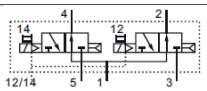	036122	A5V10B35

Solenoid valves for valve terminals series A5

Type A5V14, size 14 mm

Main features

Version	Code	Item	Symbol
Solenoid valve 14 mm 5/2 solenoid/spring	036131	A5V14B50	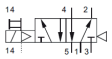
Solenoid valve 14 mm 5/2 solenoid/solenoid	036132	A5V14B51	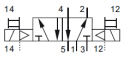
Solenoid valve 14 mm 5/3 closed centres	036133	A5V14B70	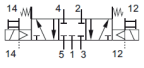
Solenoid valve 14 mm 5/3 open centres	036134	A5V14B71	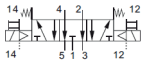
Solenoid valve 14 mm 5/3 pressurized centres	036135	A5V14B72	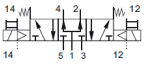
Solenoid valve 14 mm 2-3/2 Normally Closed-Normally Open	036128	A5V14B33	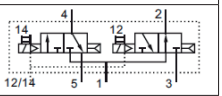
Solenoid valve 14 mm 2-3/2 Normally Closed-Normally Closed	036129	A5V14B34	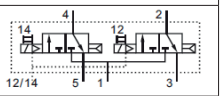
Solenoid valve 14 mm 2-3/2 Normally Open-Normally Open	036130	A5V14B35	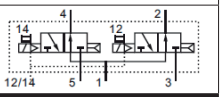



Technical data

Version	5/2		5/3			2-3/2		
Item	A5V14B50	A5V14B51	A5V14B70	A5V14B71	A5V14B72	A5V14B33	A5V14B34	A5V14B35
Code	036131	036132	036133	036134	036135	036128	036129	036130
Function	5/2 sol./spring	5/2 sol./sol.	5/3 C.C.	5/3 O.C.	5/3 P.C.	2-3/2 N.C.-N.O.	2-3/2 N.C.-N.C.	2-3/2 N.O.-N.O.
Fluid	Compressed air with or without lubrication. Lubrication, if started, must be continued.							
Size	14 mm							
Temperature range	-5°C ÷ +60°C							
Pressure range	2 ÷ 8 bar		3 ÷ 8 bar			2,5 ÷ 8 bar		
Flow at 6 bar with ΔP 1bar	600 l/min							
Voltage	24 VDC							
Electrical consumption	1,2 W							
Duty cycle	100% ED							
Manual override	"Push" and bistable							
Control indicator	LED							
Sub-base matching	A5B14..							

Notes

For possible configurations of valve terminals see from page 2.70.3;

(1) For 14 mm sub-bases features see from page 2.72.40

Standard dimensions

Type: **A5V14B52**

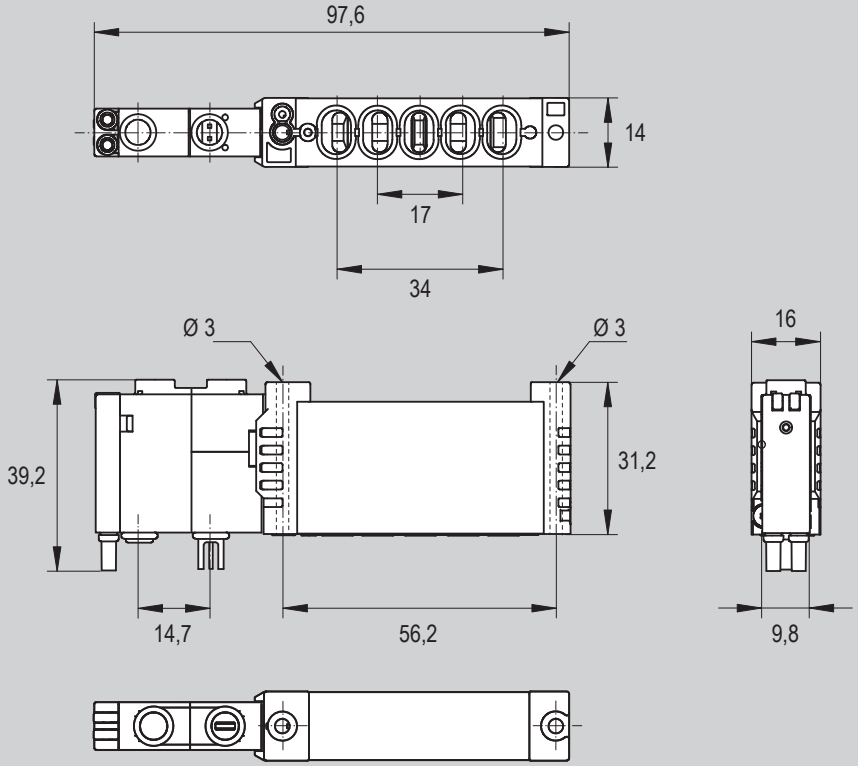

Version	Symbol	Code	Item
14 mm 5/2 solenoid/spring	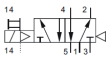	036131	A5V14B50

Standard dimensions

Type: **A5V14B51**
A5V14B70
A5V14B71
A5V14B72
A5V14B33
A5V14B34
A5V14B35

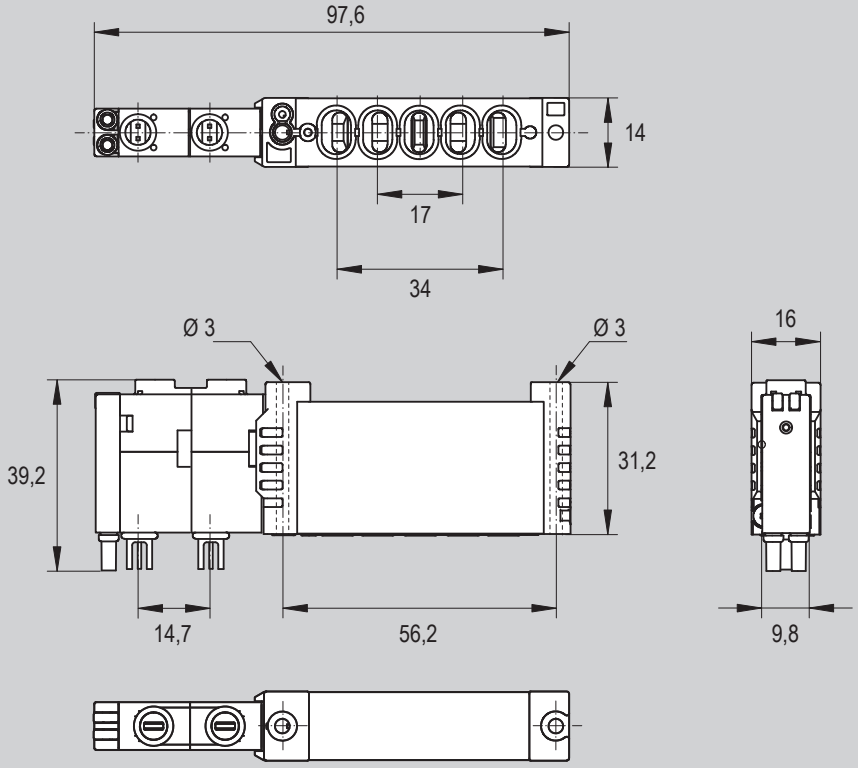

Version	Symbol	Code	Item
14 mm 5/2 solenoid/solenoid	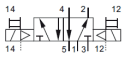	036132	A5V14B51
14 mm 5/3 closed centres	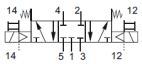	036133	A5V14B70
14 mm 5/3 open centres	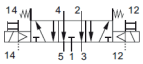	036134	A5V14B71
14 mm 5/3 pressurized centres	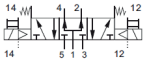	036135	A5V14B72
14 mm 2-3/2 normally closed-normally open	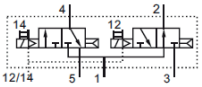	036128	A5V14B33
14 mm 2-3/2 normally closed-normally closed	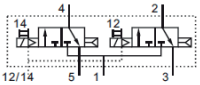	036129	A5V14B34
14 mm 2-3/2 normally open-normally open	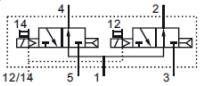	036130	A5V14B35

SUB-BASES

for valve terminals series A5



Features and certifications

Multiple sub-bases with integrated PCB for valve terminals series A5, available in sizes 10 mm and 14 mm, from 4 to 24 positions. Both sizes are compatible with all the communication interfaces (see from page 2.73.1). About solenoid valves, the 10 mm and 14 mm size sub-bases are compatible with the respective valve sizes (see from page 2.71.1).
Supplied as standard in compliance to Reach and RoHS directives.
Accessories such as screws for external piloting, plugs for unused positions, blanking diaphragm for separating feedings or exhausts to be ordered separately (see from page 2.75.1).

Sub-bases type A5B10..

from page 2.72.10



Sub-bases for valve terminals series A5 size10 mm, available with set positions from 4 to 24 (4, 5, 6, 7, 8, 9, 10, 12, 14, 16, 20 or 24 stations).
Sub-bases series A5B are equipped with integrated PCB, are compatible with all available interface modules (Fieldbus, Multipolar Sub-D and IO-Link®) and with solenoid valves size 10 mm.
Accessories as screws for external piloting, plugs for unused positions, blanking diaphragm for separating feedings or exhausts to be ordered separately.

Sub-bases type A5B14..

from page 2.72.20



Sub-bases for valve terminals series A5 size14 mm, available with set positions from 4 to 24 (4, 5, 6, 7, 8, 9, 10, 12, 14, 16, 20 or 24 stations).
Sub-bases series A5B are equipped with integrated PCB, are compatible with all available interface modules (Fieldbus, Multipolar Sub-D and IO-Link®) and with solenoid valves size 14 mm.
Accessories as screws for external piloting, plugs for unused positions, blanking diaphragm for separating feedings or exhausts to be ordered separately.

Sub-bases for valve terminals series A5

Type A5B10, size 10 mm

Main features



Version	Code	Item
Sub-base 10 mm, 4 positions, internal piloting	036136	A5B10I04
Sub-base 10 mm, 5 positions, internal piloting	036137	A5B10I05
Sub-base 10 mm, 6 positions, internal piloting	036138	A5B10I06
Sub-base 10 mm, 7 positions, internal piloting	036139	A5B10I07
Sub-base 10 mm, 8 positions, internal piloting	036140	A5B10I08
Sub-base 10 mm, 9 positions, internal piloting	036141	A5B10I09
Sub-base 10 mm, 10 positions, internal piloting	036142	A5B10I10
Sub-base 10 mm, 12 positions, internal piloting	036143	A5B10I12
Sub-base 10 mm, 14 positions, internal piloting	036200	A5B10I14
Sub-base 10 mm, 16 positions, internal piloting	036144	A5B10I16
Sub-base 10 mm, 20 positions, internal piloting	036145	A5B10I20
Sub-base 10 mm, 24 positions, internal piloting	036146	A5B10I24
Sub-base 10 mm, 4 positions, external piloting	036147	A5B10E04
Sub-base 10 mm, 5 positions, external piloting	036148	A5B10E05
Sub-base 10 mm, 6 positions, external piloting	036149	A5B10E06
Sub-base 10 mm, 7 positions, external piloting	036150	A5B10E07
Sub-base 10 mm, 8 positions, external piloting	036151	A5B10E08
Sub-base 10 mm, 9 positions, external piloting	036152	A5B10E09
Sub-base 10 mm, 10 positions, external piloting	036153	A5B10E10
Sub-base 10 mm, 12 positions, external piloting	036154	A5B10E12
Sub-base 10 mm, 14 positions, external piloting	036201	A5B10E14
Sub-base 10 mm, 16 positions, external piloting	036155	A5B10E16
Sub-base 10 mm, 20 positions, external piloting	036156	A5B10E20
Sub-base 10 mm, 24 positions, external piloting	036157	A5B10E24

Technical data

Item	A5B10..04	A5B10..05	A5B1006	A5B10..07	A5B10..08	A5B10..09	A5B10..10	A5B10..12	A5B10..14	A5B10..16	A5B10..20	A5B10..24
Size	10 mm											
Positions	4	5	6	7	8	9	10	12	14	16	20	24
Fluid	Compressed air with or without lubrication. Lubrication, if started, must be continued.											
Pressure range	Depending on the configuration, see from page 2.70.3											
Temperature range	-5°C ÷ +60°C											
Flow at 6 bar with ΔP 1bar	300 l/min											
Piloting	Internal or external (see page 2.70.6; for item and code please see the table above)											
Sub-base air supply	G 1/4"											
Sub-base exhausts	G 1/4"											
Connection for external piloting(1)	M5											
Sub-base outlets	M7											
Solenoid valves matching(2)	A5V10											
Internal data transmission	With integrated PCB											
Materials	Anodized aluminium											

Notes

For valve terminals configurations, please see from page 2.70.3;

For interfaces see from page 2.73.1

For accessories (piloting plugs and screws, plugs for unused positions, outlet fittings and diaphragm for separated feeding or exhausts) to be ordered separately, see from page 2.75.20

For inlet, exhaust and external piloting connection fittings, to be ordered separately, see from page 4.3.1; For exhaust silencers, to be ordered separately, see from page 4.150.1

(1) In case of configuration with external piloting only; (2) For 10 mm solenoid valves features see from page 2.71.20

Standard dimensions

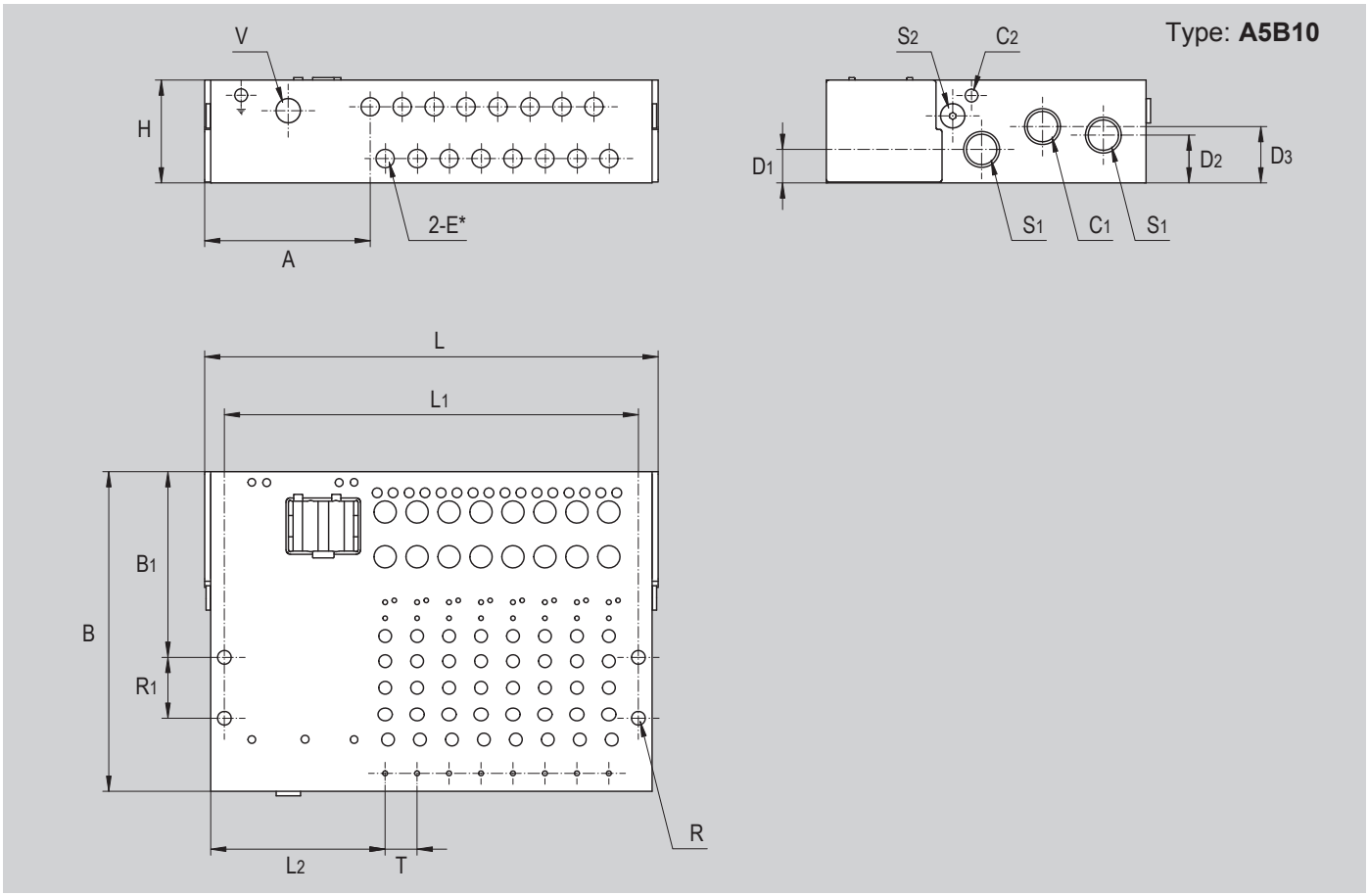

Item	Code	Size	Pos.	A	B	B1	C1	C2	D1	D2	D3	E*	H	L	L1	L2	ØR	R1	S1	S2	T	V
A5B10I04	036136	10 mm	4	54,3	105	61	G1/4"	M5	11	15,7	18,5	M7	33,8	107	94	57,3	4,5	20	G1/4"	M5	10,5	M5
A5B10I05	036137	10 mm	5	54,3	105	61	G1/4"	M5	11	15,7	18,5	M7	33,8	117,5	104,5	57,3	4,5	20	G1/4"	M5	10,5	M5
A5B10I06	036138	10 mm	6	54,3	105	61	G1/4"	M5	11	15,7	18,5	M7	33,8	128	115	57,3	4,5	20	G1/4"	M5	10,5	M5
A5B10I07	036139	10 mm	7	54,3	105	61	G1/4"	M5	11	15,7	18,5	M7	33,8	138,5	125,5	57,3	4,5	20	G1/4"	M5	10,5	M5
A5B10I08	036140	10 mm	8	54,3	105	61	G1/4"	M5	11	15,7	18,5	M7	33,8	149	136	57,3	4,5	20	G1/4"	M5	10,5	M5
A5B10I09	036141	10 mm	9	54,3	105	61	G1/4"	M5	11	15,7	18,5	M7	33,8	159,5	146,5	57,3	4,5	20	G1/4"	M5	10,5	M5
A5B10I10	036142	10 mm	10	54,3	105	61	G1/4"	M5	11	15,7	18,5	M7	33,8	170	157	57,3	4,5	20	G1/4"	M5	10,5	M5
A5B10I12	036143	10 mm	12	54,3	105	61	G1/4"	M5	11	15,7	18,5	M7	33,8	191	178	57,3	4,5	20	G1/4"	M5	10,5	M5
A5B10I14	036200	10 mm	14	54,3	105	61	G1/4"	M5	11	15,7	18,5	M7	33,8	212	199	57,3	4,5	20	G1/4"	M5	10,5	M5
A5B10I16	036144	10 mm	16	54,3	105	61	G1/4"	M5	11	15,7	18,5	M7	33,8	233	222	57,3	4,5	20	G1/4"	M5	10,5	M5
A5B10I20	036145	10 mm	20	54,3	105	61	G1/4"	M5	11	15,7	18,5	M7	33,8	275	262	57,3	4,5	20	G1/4"	M5	10,5	M5
A5B10I24	036146	10 mm	24	54,3	105	61	G1/4"	M5	11	15,7	18,5	M7	33,8	317	304	57,3	4,5	20	G1/4"	M5	10,5	M5
A5B10E04	036147	10 mm	4	54,3	105	61	G1/4"	M5	11	15,7	18,5	M7	33,8	107	94	57,3	4,5	20	G1/4"	M5	10,5	M5
A5B10E05	036148	10 mm	5	54,3	105	61	G1/4"	M5	11	15,7	18,5	M7	33,8	117,5	104,5	57,3	4,5	20	G1/4"	M5	10,5	M5
A5B10E06	036149	10 mm	6	54,3	105	61	G1/4"	M5	11	15,7	18,5	M7	33,8	128	115	57,3	4,5	20	G1/4"	M5	10,5	M5
A5B10E07	036150	10 mm	7	54,3	105	61	G1/4"	M5	11	15,7	18,5	M7	33,8	138,5	125,5	57,3	4,5	20	G1/4"	M5	10,5	M5
A5B10E08	036151	10 mm	8	54,3	105	61	G1/4"	M5	11	15,7	18,5	M7	33,8	149	136	57,3	4,5	20	G1/4"	M5	10,5	M5
A5B10E09	036152	10 mm	9	54,3	105	61	G1/4"	M5	11	15,7	18,5	M7	33,8	159,5	146,5	57,3	4,5	20	G1/4"	M5	10,5	M5
A5B10E10	036153	10 mm	10	54,3	105	61	G1/4"	M5	11	15,7	18,5	M7	33,8	170	157	57,3	4,5	20	G1/4"	M5	10,5	M5
A5B10E12	036154	10 mm	12	54,3	105	61	G1/4"	M5	11	15,7	18,5	M7	33,8	191	178	57,3	4,5	20	G1/4"	M5	10,5	M5
A5B10E14	036201	10 mm	14	54,3	105	61	G1/4"	M5	11	15,7	18,5	M7	33,8	212	199	57,3	4,5	20	G1/4"	M5	10,5	M5
A5B10E16	036155	10 mm	16	54,3	105	61	G1/4"	M5	11	15,7	18,5	M7	33,8	233	222	57,3	4,5	20	G1/4"	M5	10,5	M5
A5B10E20	036156	10 mm	20	54,3	105	61	G1/4"	M5	11	15,7	18,5	M7	33,8	275	262	57,3	4,5	20	G1/4"	M5	10,5	M5
A5B10E24	036157	10 mm	24	54,3	105	61	G1/4"	M5	11	15,7	18,5	M7	33,8	317	304	57,3	4,5	20	G1/4"	M5	10,5	M5

Notes

Fittings, silencers and accessories to be ordered separately.
*There are 2 connections for each position on the sub-base, therefore the overall number of connections depends on the chosen configuration.

Sub-bases for valve terminals series A5

Type A5B14, size 14 mm

Main features

Version	Code	Item
Sub-base 14 mm, 4 positions, internal piloting	036158	A5B14I04
Sub-base 14 mm, 5 positions, internal piloting	036159	A5B14I05
Sub-base 14 mm, 6 positions, internal piloting	036160	A5B14I06
Sub-base 14 mm, 7 positions, internal piloting	036161	A5B14I07
Sub-base 14 mm, 8 positions, internal piloting	036162	A5B14I08
Sub-base 14 mm, 9 positions, internal piloting	036163	A5B14I09
Sub-base 14 mm, 10 positions, internal piloting	036164	A5B14I10
Sub-base 14 mm, 12 positions, internal piloting	036165	A5B14I12
Sub-base 14 mm, 14 positions, internal piloting	036202	A5B14I14
Sub-base 14 mm, 16 positions, internal piloting	036166	A5B14I16
Sub-base 14 mm, 20 positions, internal piloting	036167	A5B14I20
Sub-base 14 mm, 24 positions, internal piloting	036168	A5B14I24
Sub-base 14 mm, 4 positions, external piloting	036169	A5B14E04
Sub-base 14 mm, 5 positions, external piloting	036170	A5B14E05
Sub-base 14 mm, 6 positions, external piloting	036171	A5B14E06
Sub-base 14 mm, 7 positions, external piloting	036172	A5B14E07
Sub-base 14 mm, 8 positions, external piloting	036173	A5B14E08
Sub-base 14 mm, 9 positions, external piloting	036174	A5B14E09
Sub-base 14 mm, 10 positions, external piloting	036175	A5B14E10
Sub-base 14 mm, 12 positions, external piloting	036176	A5B14E12
Sub-base 14 mm, 14 positions, external piloting	036203	A5B14E14
Sub-base 14 mm, 16 positions, external piloting	036177	A5B14E16
Sub-base 14 mm, 20 positions, external piloting	036178	A5B14E20
Sub-base 14 mm, 24 positions, external piloting	036179	A5B14E24



Technical data

Item	A5B14..04	A5B14..05	A5B1406	A5B14..07	A5B14..08	A5B14..09	A5B14..10	A5B14..12	A5B14..14	A5B14..16	A5B14..20	A5B14..24
Size	14 mm											
Positions	4	5	6	7	8	9	10	12	14	16	20	24
Fluid	Compressed air with or without lubrication. Lubrication, if started, must be continued.											
Pressure range	Depending on the configuration, see from page 2.70.3											
Temperature range	-5°C ÷ +60°C											
Flow at 6 bar with ΔP 1bar	600 l/min											
Piloting	Internal or external (see page 2.70.6; for item and code please see the table above)											
Sub-base air supply	G 1/4"											
Sub-base exhausts	G 1/4"											
Connection for external piloting(1)	M5											
Sub-base outlets	G 1/8"											
Solenoid valves matching(2)	A5V14											
Internal data transmission	With integrated PCB											
Materials	Anodized aluminium											

Notes

For valve terminals configurations, please see from page 2.70.3;

For interfaces see from page 2.73.1

For accessories (piloting plugs and screws, plugs for unused positions, outlet fittings and diaphragm for separated feeding or exhausts) to be ordered separately, see from page 2.75.20

For inlet, exhaust and external piloting connection fittings, to be ordered separately, see from page 4.3.1; For exhaust silencers, to be ordered separately, see from page 4.150.1

(1) In case of configuration with external piloting only; (2) For 10 mm solenoid valves features see from page 2.71.20

Standard dimensions

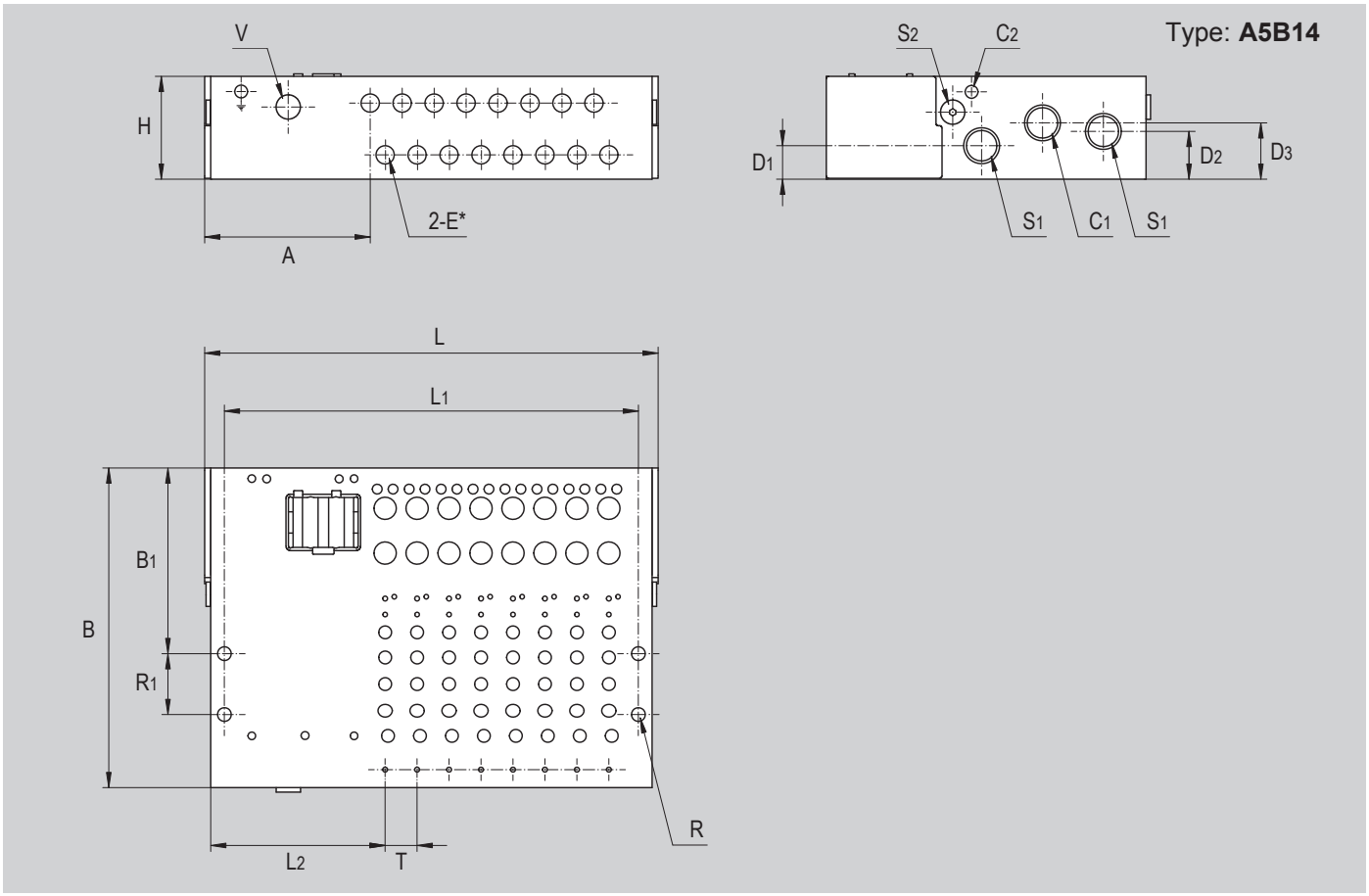

Item	Code	Size	Pos.	A	B	B1	C1	C2	D1	D2	D3	E*	H	L	L1	L2	ØR	R1	S1	S2	T	V
A5B14I04	036158	14 mm	4	54,3	105	61	G1/4"	M5	11	15,7	18,5	G1/8"	33,8	132	118	60,5	4,5	20	G1/4"	M5	16	M5
A5B14I05	036159	14 mm	5	54,3	105	61	G1/4"	M5	11	15,7	18,5	G1/8"	33,8	148	134	60,5	4,5	20	G1/4"	M5	16	M5
A5B14I06	036160	14 mm	6	54,3	105	61	G1/4"	M5	11	15,7	18,5	G1/8"	33,8	164	150	60,5	4,5	20	G1/4"	M5	16	M5
A5B14I07	036161	14 mm	7	54,3	105	61	G1/4"	M5	11	15,7	18,5	G1/8"	33,8	180	166	60,5	4,5	20	G1/4"	M5	16	M5
A5B14I08	036162	14 mm	8	54,3	105	61	G1/4"	M5	11	15,7	18,5	G1/8"	33,8	196	182	60,5	4,5	20	G1/4"	M5	16	M5
A5B14I09	036163	14 mm	9	54,3	105	61	G1/4"	M5	11	15,7	18,5	G1/8"	33,8	212	198	60,5	4,5	20	G1/4"	M5	16	M5
A5B14I10	036164	14 mm	10	54,3	105	61	G1/4"	M5	11	15,7	18,5	G1/8"	33,8	228	214	60,5	4,5	20	G1/4"	M5	16	M5
A5B14I12	036165	14 mm	12	54,3	105	61	G1/4"	M5	11	15,7	18,5	G1/8"	33,8	260	246	60,5	4,5	20	G1/4"	M5	16	M5
A5B14I14	036202	14 mm	14	54,3	105	61	G1/4"	M5	11	15,7	18,5	G1/8"	33,8	292	278	60,5	4,5	20	G1/4"	M5	16	M5
A5B14I16	036166	14 mm	16	54,3	105	61	G1/4"	M5	11	15,7	18,5	G1/8"	33,8	324	310	60,5	4,5	20	G1/4"	M5	16	M5
A5B14I20	036167	14 mm	20	54,3	105	61	G1/4"	M5	11	15,7	18,5	G1/8"	33,8	388	374	60,5	4,5	20	G1/4"	M5	16	M5
A5B14I24	036168	14 mm	24	56	105	61	G1/4"	M5	11	15,7	18,5	G1/8"	33,8	452	438	60,5	4,5	20	G1/4"	M5	16	M5
A5B14E04	036169	14 mm	4	54,3	105	61	G1/4"	M5	11	15,7	18,5	G1/8"	33,8	132	118	60,5	4,5	20	G1/4"	M5	16	M5
A5B14E05	036170	14 mm	5	54,3	105	61	G1/4"	M5	11	15,7	18,5	G1/8"	33,8	148	134	60,5	4,5	20	G1/4"	M5	16	M5
A5B14E06	036171	14 mm	6	54,3	105	61	G1/4"	M5	11	15,7	18,5	G1/8"	33,8	164	150	60,5	4,5	20	G1/4"	M5	16	M5
A5B14E07	036172	14 mm	7	54,3	105	61	G1/4"	M5	11	15,7	18,5	G1/8"	33,8	180	166	60,5	4,5	20	G1/4"	M5	16	M5
A5B14E08	036173	14 mm	8	54,3	105	61	G1/4"	M5	11	15,7	18,5	G1/8"	33,8	196	182	60,5	4,5	20	G1/4"	M5	16	M5
A5B14E09	036174	14 mm	9	54,3	105	61	G1/4"	M5	11	15,7	18,5	G1/8"	33,8	212	198	60,5	4,5	20	G1/4"	M5	16	M5
A5B14E10	036175	14 mm	10	54,3	105	61	G1/4"	M5	11	15,7	18,5	G1/8"	33,8	228	214	60,5	4,5	20	G1/4"	M5	16	M5
A5B14E12	036176	14 mm	12	54,3	105	61	G1/4"	M5	11	15,7	18,5	G1/8"	33,8	260	246	60,5	4,5	20	G1/4"	M5	16	M5
A5B14E14	036203	14 mm	14	54,3	105	61	G1/4"	M5	11	15,7	18,5	G1/8"	33,8	292	278	60,5	4,5	20	G1/4"	M5	16	M5
A5B14E16	036177	14 mm	16	54,3	105	61	G1/4"	M5	11	15,7	18,5	G1/8"	33,8	324	310	60,5	4,5	20	G1/4"	M5	16	M5
A5B14E20	036178	14 mm	20	54,3	105	61	G1/4"	M5	11	15,7	18,5	G1/8"	33,8	388	375	60,5	4,5	20	G1/4"	M5	16	M5
A5B14E24	036179	14 mm	24	56	105	61	G1/4"	M5	11	15,7	18,5	G1/8"	33,8	452	438	60,5	4,5	20	G1/4"	M5	16	M5

Notes

Fittings, silencers and accessories to be ordered separately.
*There are 2 connections for each position on the sub-base, therefore the overall number of connections depends on the chosen configuration.

INTERFACES

for valve terminals series A5



Features and certifications

Communication modular interfaces for valve terminals series A5.
Three interface types available:
- Fieldbus interface, with communication protocol configurable by choosing between ProfiNET®, EtherCAT®, EtherNET/IP® and CC-Link IE™Field Basic, or with ProfiBUS® protocol;
- Multipole Sub-D connection interface;
- IO-Link® interface, available in version 8, 16 or 24, depending on the maximum number of manageable valves.

All interfaces can be installed on any type of sub-base: both size 10 mm and 14 mm (see from page 2.72.1)
Connection cables to be ordered separately (see from page 2.75.40)
Supplied as standard in compliance to Reach and RoHS directives.

Fieldbus interface series A5

from page 2.70.10



Fieldbus interface with communication protocol configurable by choosing between ProfiNET®, EtherCAT®, EtherNET/IP® and CC-Link IE™Field Basic.
This interface can manage valve terminals from 4 to 24 positions, which allow to control up to 48 cylinders using 2-3/2 solenoid valves.
Connection cables to be ordered separately.

Fieldbus interface series A5

from page 2.70.15



Fieldbus interface with ProfiBUS® communication protocol.
This interface can manage valve terminals from 4 to 24 positions, which allow to control up to 48 cylinders using 2-3/2 solenoid valves.
Connection cables to be ordered separately.

Sub-D interface series A5

from page 2.70.40



Sub-D 25 pin multipole communication interface.
This interface can manage valve terminals from 4 to 24 position, with a maximum of 12 double electric pilot solenoid valves or 24 single electric pilot solenoid valves.
Connection cables to be ordered separately.

IO-Link® interface series A5

from page 2.70.60



IO-Link® communication interface available in three versions, 8, 16 and 24, depending on the maximum number of manageable valves.
This interface, in version IO-Link® 8, can manage valve terminals from 4 to 8 position, which allows to control up to 16 cylinders using 2-3/2 solenoid valves; in version IO-Link® 16 this module can manage valve terminals from 4 to 16, which allows to control up to 32 cylinders using 2-3/2 solenoid valves; interface IO-Link® 24 can manage valve terminals from 4 to 24, which allows to control up to 48 cylinders using 2-3/2 solenoid valves.
Connection cables to be ordered separately.

Main features

Version	Code	Item	Symbol
Fieldbus interface with ProfiNET® protocol	036100	A501	PROFINET®
Fieldbus interface with EtherCAT® protocol	036101	A502	EtherCAT®
Fieldbus interface with EtherNET/IP® protocol	036102	A503	EtherNet/IP®
Fieldbus interface with CC-Link IE™ Field Basic protocol	036103	A504	CC-Link IE Field Basic



Technical data

Item	A501	A502	A503	A504
Communication protocol	ProfiNET®	EtherCAT®	EtherNET/IP®	CC-Link IE™ Field Basic
Maximum managed valves	24 solenoid valves (also with double electric pilot)			
Temperature range	-5°C ÷ +60°C			
Voltage	24 VDC			
Electrical consumption	1,2 W			
Power supply port	M12 Male 4 pin connector, A-coded (for configuration see table below)			
Communication port input / output	M12 Female 4 pin connector, D-coded (for configuration see table below)			
Power supply cable*	M12 Female cable type CAVFBFD			
Communication cable*	M12 Male cable type CAVFBMD, CAVFBMM, CAVFBMR			
Control	On integrated dial (see table below)			
Control indicator	LED (see table below)			

*Cables to be ordered separately, see from page 2.75.40

Fieldbus module

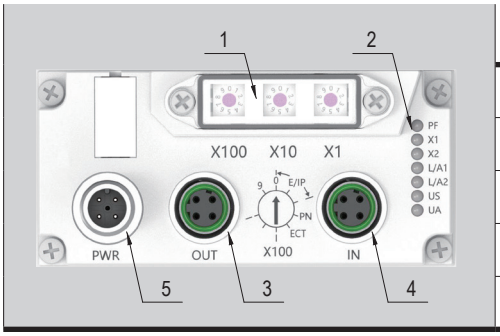

N.	Description	Function
1	Control dial	Allows to set the IP address and valve coils
2	Control indicator	Indicates the status and operation of functions via LEDs
3	Communication (output)	Output communication port type M12 Female 4-pin, D-coded
4	Communication (input)	Input communication port type M12 Female 4-pin, D-coded
5	Power supply port	Power supply input port type M12 Male 4-pin, A-coded

Power supply configuration

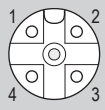

Pin	Function	
1	UA	Actuator power supply
2	GND	Actuator power supply
3	US	Bus power supply
4	GND	Bus power supply

Communication configuration (input)

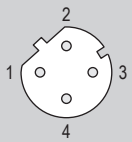

Pin	Function	
1	Tx+	Data transfer (+)
2	Rx+	Data receiving (+)
3	Tx-	Data transfer (-)
4	Rx-	Data receiving (-)

Communication configuration (output)

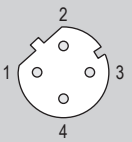

Pin	Function	
1	Tx+	Data transfer (+)
2	Rx+	Data receiving (+)
3	Tx-	Data transfer (-)
4	Rx-	Data receiving (-)

Main features

Version	Code	Item	Symbol
Fieldbus interface with ProfiBUS® protocol	036205	A509	PROFI BUS®



Technical data

Item	A509
Communication protocol	ProfiBUS®
Maximum managed valves	24 solenoid valves (also with double electric pilot)
Temperature range	-5°C ÷ +60°C
Voltage	24 VDC
Electrical consumption	1,2 W
Power supply port	M12 Male 4 pin connector, A-coded (for configuration see table below)
Communication port input / output	M12 Male 4 pin connector, D-coded / M12 Female 4 pin connector, D-coded (for configuration see table below)
Power supply cable*	M12 Female cable type CAVFBFD
Communication cable* input / output	M12 Female cable type CAVPBFD / M12 Male cable type CAVFBMD, CAVFBMM, CAVFBMR
Control	On integrated dial (see table below)
Control indicator	LED (see table below)

*Cables to be ordered separately, see from page 2.75.40

Fieldbus module

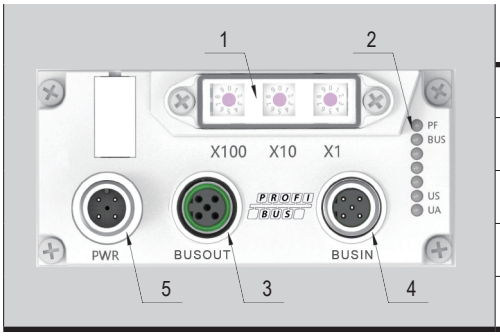

N.	Description	Function
1	Control dial	Allows to set the IP address and valve coils
2	Control indicator	Indicates the status and operation of functions via LEDs
3	Communication (output)	Output communication port type M12 Female 4-pin, D-coded
4	Communication (input)	Input communication port type M12 Male 4-pin, D-coded
5	Power supply	Power supply input port type M12 Male 4-pin, A-coded

Power supply configuration

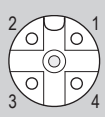

Pin	Function	
1	UA	Actuator power supply
2	GND	Actuator power supply
3	US	Bus power supply
4	GND	Bus power supply

Communication configuration (output)

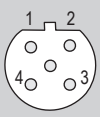

Pin	Funzione	
1	VP (+5V)	
2	RxD/TxD-N A line	Data transfer (-) Data receiving (-)
3	DGND-	
4	RxD/TxD-N B line	Data transfer (+) Data receiving (+)

Communication configuration (input)

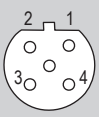

Pin	Funzione	
1	VP (+5V)	
2	RxD/TxD-N A line	Trasmissione dati (-) Ricezione dati (-)
3	DGND-	
4	RxD/TxD-N B line	Trasmissione dati (+) Ricezione dati (+)

Main features

Version	Code	Item	Symbol
Sub-D 25 poles interface	036104	A505	-



Technical data

Item	A505
Communication protocol	Sub-D 25 pin
Maximum managed valves	24 single electric pilot solenoid valve, 12 double electric pilot solenoid valve
Temperature range	-5°C ÷ +60°C
Voltage	24 VDC
Electrical consumption	1,2 W
Power supply port	Sub-D Male 25 pin connector
Communication port input / output	Sub-D Male 25 pin connector
Power supply cable*	Sub-D Female 25 pin cable type CAVSDFD
Communication cable*	Sub-D Female 25 pin cable type CAVSDFD

*Cables to be ordered separately, see page 2.75.43

Sub-D module

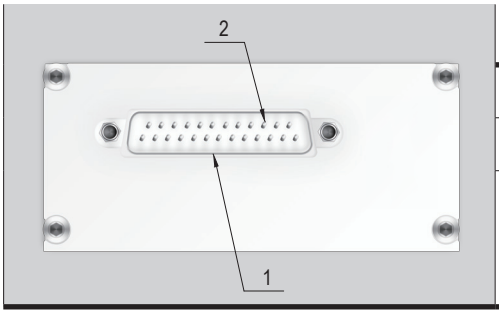

N.	Description	Function
1	Connector	Sub-D Male 25 pin (see tabel at page 2.73.41)
2	Pin	Each pin controls a function of the valve terminal (see table at page 2.73.41)

Sub-D interface connection diagram

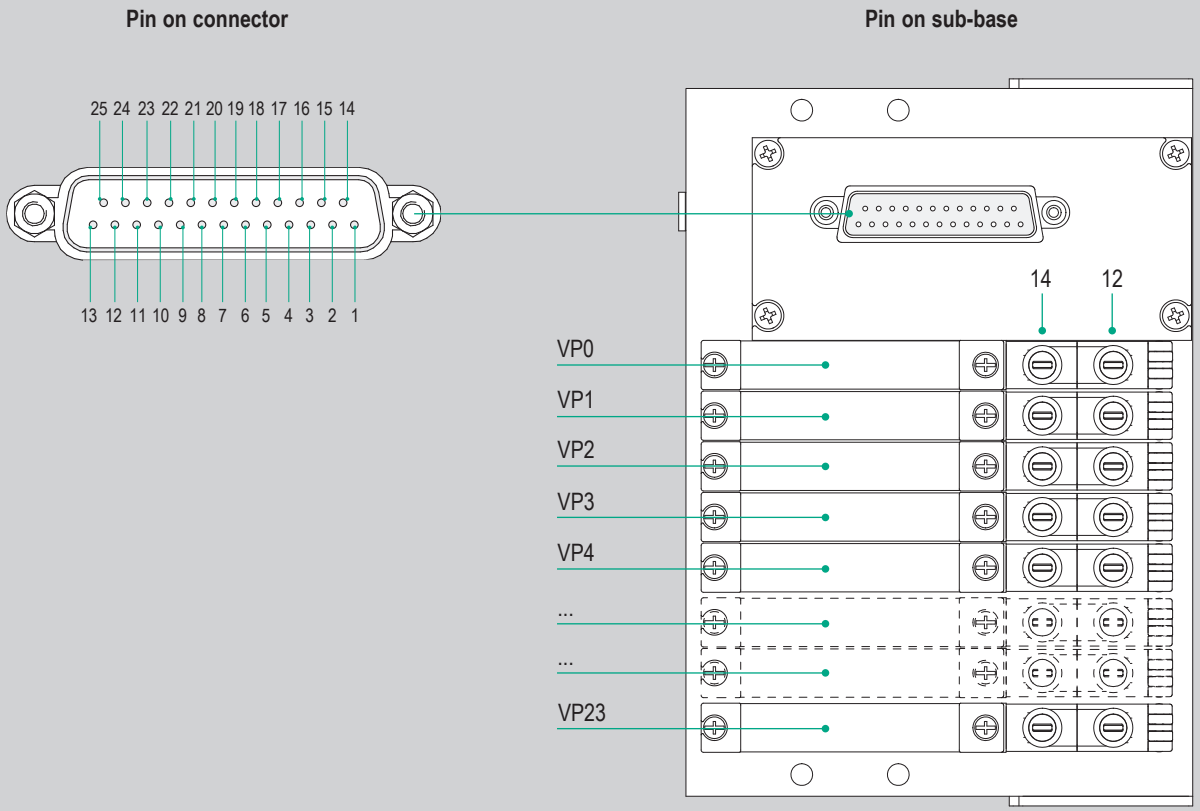

Pin on connector	Wire color	Number of positions on sub-base									
		4 ÷ 12		14		16		20		24	
1	White	VP0	14	VP0	14	VP0	14	VP0	14	VP0	14
2	Brown	VP0	12	VP0	12	VP0	12	VP0	12	VP23	14
3	Green	VP1	14	VP1	14	VP1	14	VP1	14	VP1	14
4	Yellow	VP1	12	VP1	12	VP1	12	VP1	12	VP22	14
5	Grey	VP2	14	VP2	14	VP2	14	VP2	14	VP2	14
6	Pink	VP2	12	VP2	12	VP2	12	VP2	12	VP21	14
7	Blue	VP3	14	VP3	14	VP3	14	VP3	14	VP3	14
8	Red	VP3	12	VP3	12	VP3	12	VP3	12	VP20	14
9	Black	VP4	14	VP4	14	VP4	14	VP4	14	VP4	14
10	Purple	VP4	12	VP4	12	VP4	12	VP19	14	VP19	14
11	Grey-Pink	VP5	14	VP5	14	VP5	14	VP5	14	VP5	14
12	Red-Blue	VP5	12	VP5	12	VP5	12	VP18	14	VP18	14
13	White-Green	VP6	14	VP6	14	VP6	14	VP6	14	VP6	14
14	Brown-Green	VP6	12	VP6	12	VP6	12	VP17	14	VP17	14
15	White-Yellow	VP7	14	VP7	14	VP7	14	VP7	14	VP7	14
16	Yellow-Brown	VP7	12	VP7	12	VP7	12	VP16	14	VP16	14
17	White-Grey	VP8	14	VP8	14	VP8	14	VP8	14	VP8	14
18	Grey-Brown	VP8	12	VP8	12	VP15	14	VP15	14	VP15	14
19	White-Pink	VP9	14	VP9	14	VP9	14	VP9	14	VP9	14
20	Pink-Brown	VP9	12	VP9	12	VP14	14	VP14	14	VP14	14
21	White-Blue	VP10	14	VP10	14	VP10	14	VP10	14	VP10	14
22	Brown-Blue	VP10	12	VP13	14	VP13	14	VP13	14	VP13	14
23	White-Red	VP11	14	VP11	14	VP11	14	VP11	14	VP11	14
24	Brown-Red	VP11	12	VP12	14	VP12	14	VP12	14	VP12	14
25	White-Black	COM		COM		COM		COM		COM	

Note: solenoid valves with double electric pilot can be only mounted in the positions VP corresponding to the grey areas in the table.

Main features

Version	Code	Item	Symbol
IO-Link® interface up to 8 positions	036105	A506	IO-Link
IO-Link® interface up to 16 positions	036106	A507	
IO-Link® interface up to 24 positions	036107	A508	



Technical data

Item	A506	A507	A508
Communication protocol	IO-Link®		
Maximum managed valves	8 solenoid valves (also double electric pilot)	16 solenoid valves (also double electric pilot)	24 solenoid valves (also double electric pilot)
Temperature range	-5°C ÷ +60°C		
Voltage	24 VDC		
Electrical consumption	1,2 W		
Power supply port	M12 Male 5 pin connector (see table below)		
Communication port input / output	M12 Male 5 pin connector (see table below)		
Power supply cable*	M12 Female cable type CAVILFD		
Communication cable*	M12 Female cable type CAVILFD		
Control indicator	LED (see table below)		

*Cables to be ordered separately, see page 2.75.44

IO-Link® module

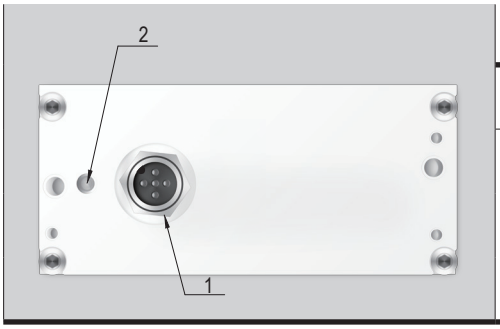

N.	Description	Function
1	Connector	M12 Male 5 pin (see table below)
2	Control indicator	Green LED (flashing) = normal operating state
		Red LED (stationary) = no power supply or IO-Link® signal
		Blue LED (stationary) = open or overloaded circuit

IO-Link® connector configuration

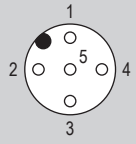

Pin	Features	Function
1	24V EL/SEN (PS)	Power supply
2	24V BAL/OUT (PL)	Power supply load
3	0V EL/SEN (PS)	Power supply
4	C/Q	Communication
5	0V VAL/OUT (PL)	Power supply load

IO-Link® drive file

Description	Specifics
Electrical features	V1.1
Data transmission rate	COM2 (38,4KBit)
Data output	2, 4, 6 bytes

Notes

VALVE TERMINALS

Series A5 complete and assembled

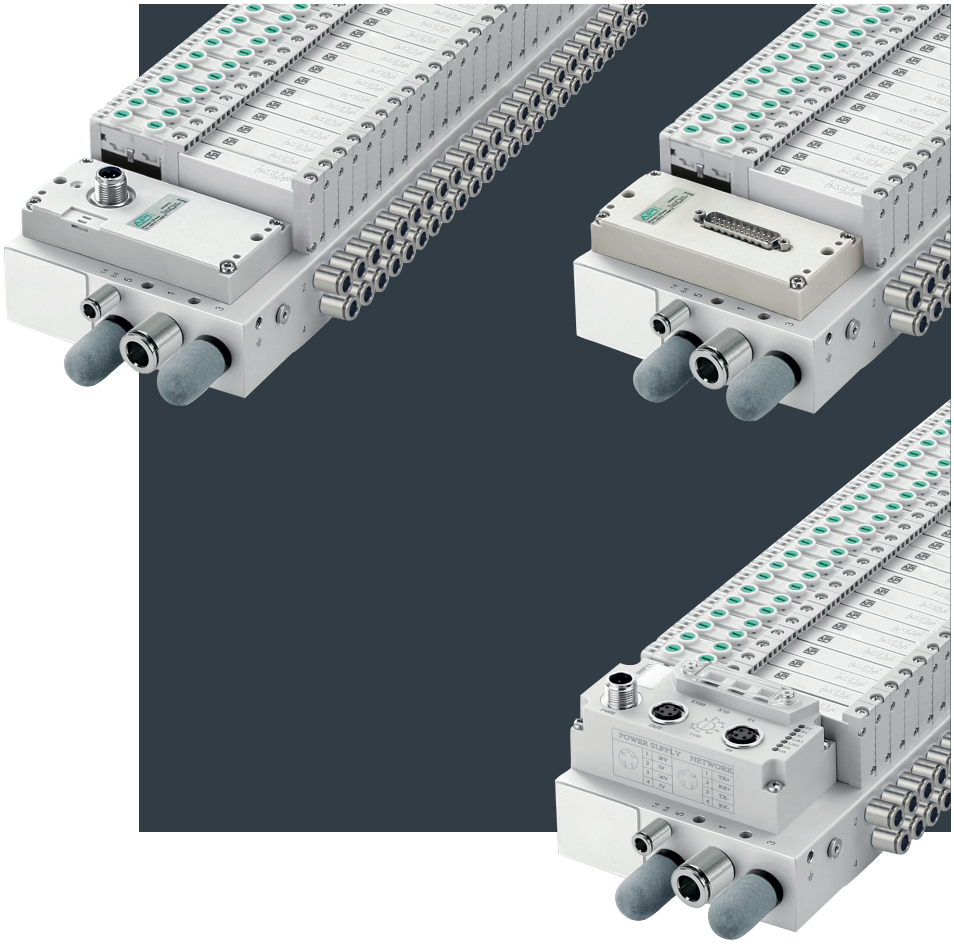

Features and certifications

Complete valve terminals available in sizes 10mm and 14mm, composed by
- **sub-bases** with set positions, from 4 to 24 stations, with possibility of internal or external piloting of solenoid valves, simply applying a screw or a plug in the relevant connection;
- **interface** with possibiliy of tree types: Fieldbus interface (with communication protocol configurable by choosing between ProfiNET®, EtherCAT®, EtherNET/IP® and CC-Link IE™Field Basic, or with ProfiBUS® protocol), multipolar Sub-D communication interface and IO-Link® interface.
- **solenoid valves** with possibility of choice between many functions (5/2, 5/3 e 2-3/2), assembled in a simple and practical way. Each valve, even if in an intermediate position, can be easily replaced. The valve coils are low consumption (1.2W), with 360° view LED, equipped with "push" and bistable manual override.

Valve terminals are supplied already assembled and tested, and in compliance to Reach and RoHS directives as standard.
Fittings, exhaust silencers, interface connection cables, blanking plugs and diaphragms for separated feeding or exhausts are to be ordered separately.

Valve terminals series A5 with Fieldbus interface

from page 2.70.20

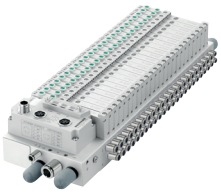

Complete valve terminals with Fieldbus communication interface (with protocol configurable by choosing between ProfiNET®, EtherCAT®, EtherNET/IP® and CC-Link IE™Field Basic, or with ProfiBUS® protocol).
Available in size 10mm and 14mm, with possibility to choose sub-bases from 4 to 24 positions: that allows to control up to 48 cylinders with 2-3/2 valves.
Valve terminals are supplied already assembled and tested.
Fittings, exhaust silencers, interface connection cables, blanking plugs and diaphragms for separated feeding or exhausts are to be ordered separately.

Valve terminals series A5 with Sub-D interface

from page 2.70.40

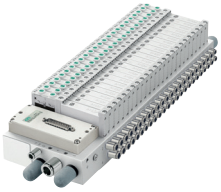

Complete valve terminals with multipole Sub-D 25 poles communication interface.
Available in size 10mm and 14mm, with possibility to choose sub-bases from 4 to 24 positions: this allows to allocate a maximum of 12 double pilot solenoid valves or 24 single pilot solenoid valves.
Valve terminals are supplied already assembled and tested.
Fittings, exhaust silencers, interface connection cables, blanking plugs and diaphragms for separated feeding or exhausts are to be ordered separately.

Valve terminals series A5 with IO-Link® interface

from page 2.70.60

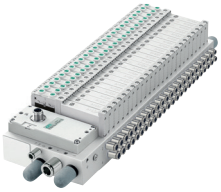

Complete valve terminals with IO-Link® communication interface (in three different versions, 8, 16 and 24, depending on the maximum number of manageable valves).
Available in size 10mm and 14mm, with possibility to choose sub-bases from 4 to 24 positions: this allows to control up to 48 cylinders with 2-3/2 valves.
Valve terminals are supplied already assembled and tested.
Fittings, exhaust silencers, interface connection cables, blanking plugs and diaphragms for separated feeding or exhausts are to be ordered separately.

Valve terminals series A5 complete and assembled
With Fieldbus interface

Main features

Version	Code	Item	Symbol
Valve terminal size 10 mm with Fieldbus interface ProfiNET® protocol	*	A51001..	PROFINET®
Valve terminal size 14 mm with Fieldbus interface ProfiNET® protocol	*	A51401..	
Valve terminal size 10 mm with Fieldbus interface EtherCAT® protocol	*	A51002..	EtherCAT®
Valve terminal size 14 mm with Fieldbus interface EtherCAT® protocol	*	A51402..	
Valve terminal size 10 mm with Fieldbus interface EtherNET/IP® protocol	*	A51003..	EtherNet/IP®
Valve terminal size 14 mm with Fieldbus interface EtherNET/IP® protocol	*	A51403..	
Valve terminal size 10 mm with Fieldbus interface CC-Link IE™ Field Basic protocol	*	A51004..	CC-Link IE Field Basic
Valve terminal size 14 mm with Fieldbus interface CC-Link IE™ Field Basic protocol	*	A51404..	
Valve terminal size 10 mm with Fieldbus interface ProfiBUS® protocol	*	A51009..	PROFIBUS®
Valve terminal size 14 mm with Fieldbus interface ProfiBUS® protocol	*	A51409..	

*For the full article and code please see page 2.70.3

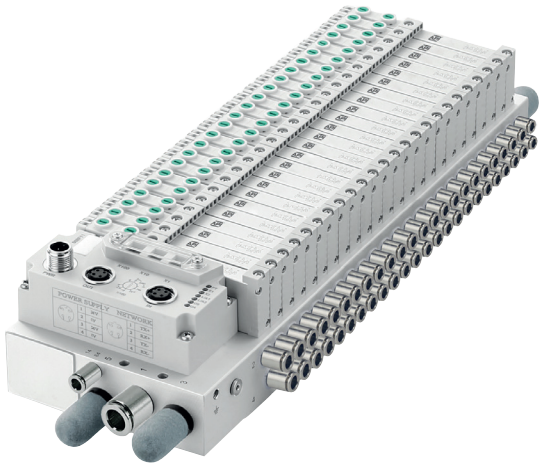

Technical data

Item		A51001..	A51002..	A51003..	A51004..	A51009..	A51401..	A51402..	A51403..	A51404..	A51409..
Size		10 mm					14 mm				
Communication protocol		ProfiNET®	EtherCAT®	EtherNET/IP®	CC-Link IE™ Field Basic	ProfiBUS®	ProfiNET®	EtherCAT®	EtherNET/IP®	CC-Link IE™ Field Basic	ProfiBUS®
Interface module features		See page 2.73.10				p. 2.73.15	See page 2.73.10				p. 2.73.15
Positions on sub-base		4 ÷ 24 (4, 5, 6, 7, 8, 9, 10, 12, 14, 16, 20, 24)									
Fluid		Compressed air with or without lubrication. Lubrication, if started, must be continued.									
Pressure range	Minimum	2 bar (5/2) - 3 bar (5/3) - 2,5 bar (2-3/2)									
	Maximum	8 bar									
Temperature range		-5°C ÷ +60°C									
Flow at 6 bar with ΔP 1bar		300 l/min					600 l/min				
Sub-base air supply		G 1/4"									
Sub-base exhausts		G 1/4"									
Connection for external piloting(1)		M5									
Sub-base outlets		M7					G 1/8"				
Voltage		24 VDC									
Electrical consumption		1,2 W									
Maximum number of valves(2)		24 (also with double electric pilot)									
Internal data transmission		With integrated PCB									
Manual override		"Push" and bistable									

Notes

For possible configurations of the valve terminal see from page 2.70.3;
The configuration does not include fittings, exhaust silencers and connection cables for the communication interface, are to be ordered separately.
For inlet, exhaust and exthernal piloting fittings see from page 4.3.1; For silencers see from page 4.150.1; For diaphragms, plugs and outlet fittings, see from page 2.75.20; For communication cables see from page 2.75.40

(1) In case of external pilot configuration.

(2) Depending on the number of positions on the sub-base. For valves features, see from page 2.71.1; For sub-bases features, see from page 2.72.1

Standard dimensions

Type: **A5 Fieldbus**

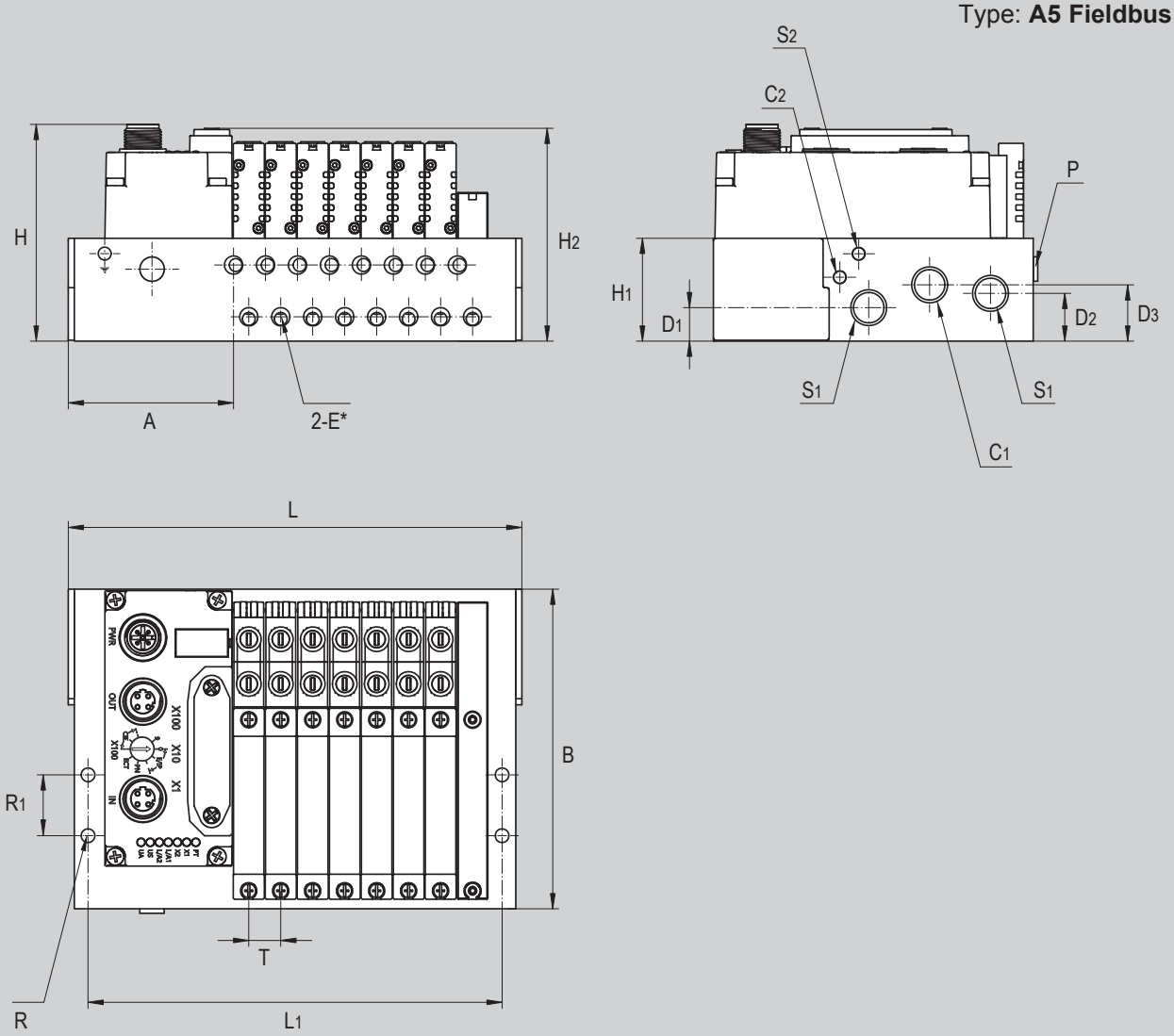

Item	Size	A	B	C1	C2	D1	D2	D3	E*	H	H1	H2	L**	L1**	P	ØR	R1	S1	S2	T
A51001..	10 mm	54,3	105	G1/4"	M5	11	15,7	18,5	M7	71,2	33,8	69,5	65+(nxT)	52+(nxT)	M5	4,5	20	G1/4"	M5	10,5
A51002..	10 mm	54,3	105	G1/4"	M5	11	15,7	18,5	M7	71,2	33,8	69,5	65+(nxT)	52+(nxT)	M5	4,5	20	G1/4"	M5	10,5
A51003..	10 mm	54,3	105	G1/4"	M5	11	15,7	18,5	M7	71,2	33,8	69,5	65+(nxT)	52+(nxT)	M5	4,5	20	G1/4"	M5	10,5
A51004..	10 mm	54,3	105	G1/4"	M5	11	15,7	18,5	M7	71,2	33,8	69,5	65+(nxT)	52+(nxT)	M5	4,5	20	G1/4"	M5	10,5
A51009..	10 mm	54,3	105	G1/4"	M5	11	15,7	18,5	M7	71,2	33,8	69,5	65+(nxT)	52+(nxT)	M5	4,5	20	G1/4"	M5	10,5
A51401..	14 mm	56	105	G1/4"	M5	10	15,7	18,5	G1/8"	71,2	33,8	69,5	64+(nxT)	54+(nxT)	M5	4,5	20	G1/4"	M5	16
A51402..	14 mm	56	105	G1/4"	M5	10	15,7	18,5	G1/8"	71,2	33,8	69,5	64+(nxT)	54+(nxT)	M5	4,5	20	G1/4"	M5	16
A51403..	14 mm	56	105	G1/4"	M5	10	15,7	18,5	G1/8"	71,2	33,8	69,5	64+(nxT)	54+(nxT)	M5	4,5	20	G1/4"	M5	16
A51404..	14 mm	56	105	G1/4"	M5	10	15,7	18,5	G1/8"	71,2	33,8	69,5	64+(nxT)	54+(nxT)	M5	4,5	20	G1/4"	M5	16
A51409..	14 mm	56	105	G1/4"	M5	10	15,7	18,5	G1/8"	71,2	33,8	69,5	64+(nxT)	54+(nxT)	M5	4,5	20	G1/4"	M5	16

Notes

Valve terminal is supplied complete, already assembled and tested. Fittings, exhaust silencers and interface connection cables to be ordered separately.

*There are 2 connections for each position on the base, therefore overall number of connections depends on the configuration.

**Quotes L and L1 are to be calculated by the number of positions of the sub-base. The letter "n" indicated in the quote must be replaced with the number of positions of the sub-base.

Valve terminals series A5 complete and assembled
With Sub-D interface

Main features

Version	Code	Item	Symbol
Valve terminal size 10 mm with Sub-D interface	*	A51005..	-
Valve terminal size 14 mm with Sub-D interface	*	A51405..	

*For the full article and code please see page 2.70.3

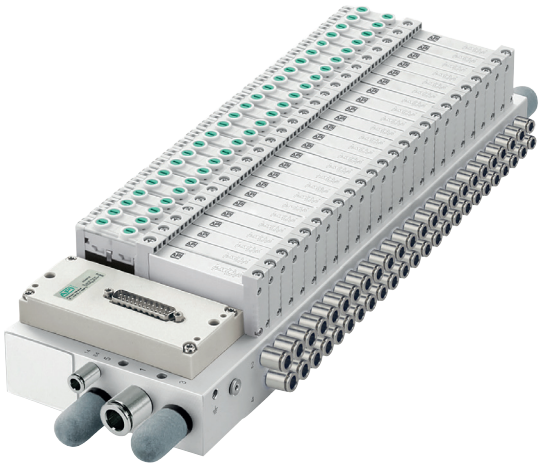

Technical data

Item		A51005..	A51405..
Size		10 mm	14 mm
Communication protocol		Sub-D 25 poles	
Interface module features		See from page 2.73.20	
Positions on sub-base		4 ÷ 24 (4, 5, 6, 7, 8, 9, 10, 12, 14, 16, 20, 24)	
Fluid		Compressed air with or without lubrication. Lubrication, if started, must be continued.	
Pressure range	Minimum	2 bar (5/2) - 3 bar (5/3) - 2,5 bar (2-3/2)	
	Maximum	8 bar	
Temperature range		-5°C ÷ +60°C	
Flow at 6 bar with ΔP 1bar		300 l/min	600 l/min
Sub-base air supply		G 1/4"	
Sub-base exhausts		G 1/4"	
Connection for external piloting(1)		M5	
Sub-base outlets		M7	G 1/8"
Voltage		24 VDC	
Electrical consumption		1,2 W	
Maximum number of valves(2)		24 with single electric pilot, 12 with double electric pilot	
Internal data transmission		With integrated PCB	
Manual override		"Push" and bistable	

Notes

For possible configurations of the valve terminal see from page 2.70.3;
The configuration does not include fittings, exhaust silencers and connection cables for the communication interface, are to be ordered separately.
For inlet, exhaust and exthernal piloting fittings see from page 4.3.1; For silencers see from page 4.150.1; For diaphragms, plugs and outlet fittings, see from page 2.75.20; For communication cables see page 2.75.43

(1) In case of external pilot configuration.

(2) Depending on the number of positions on the sub-base. For valves features, see from page 2.71.1; For sub-bases features, see from page 2.72.1

Standard dimensions

Type: **A5 Sub-D**

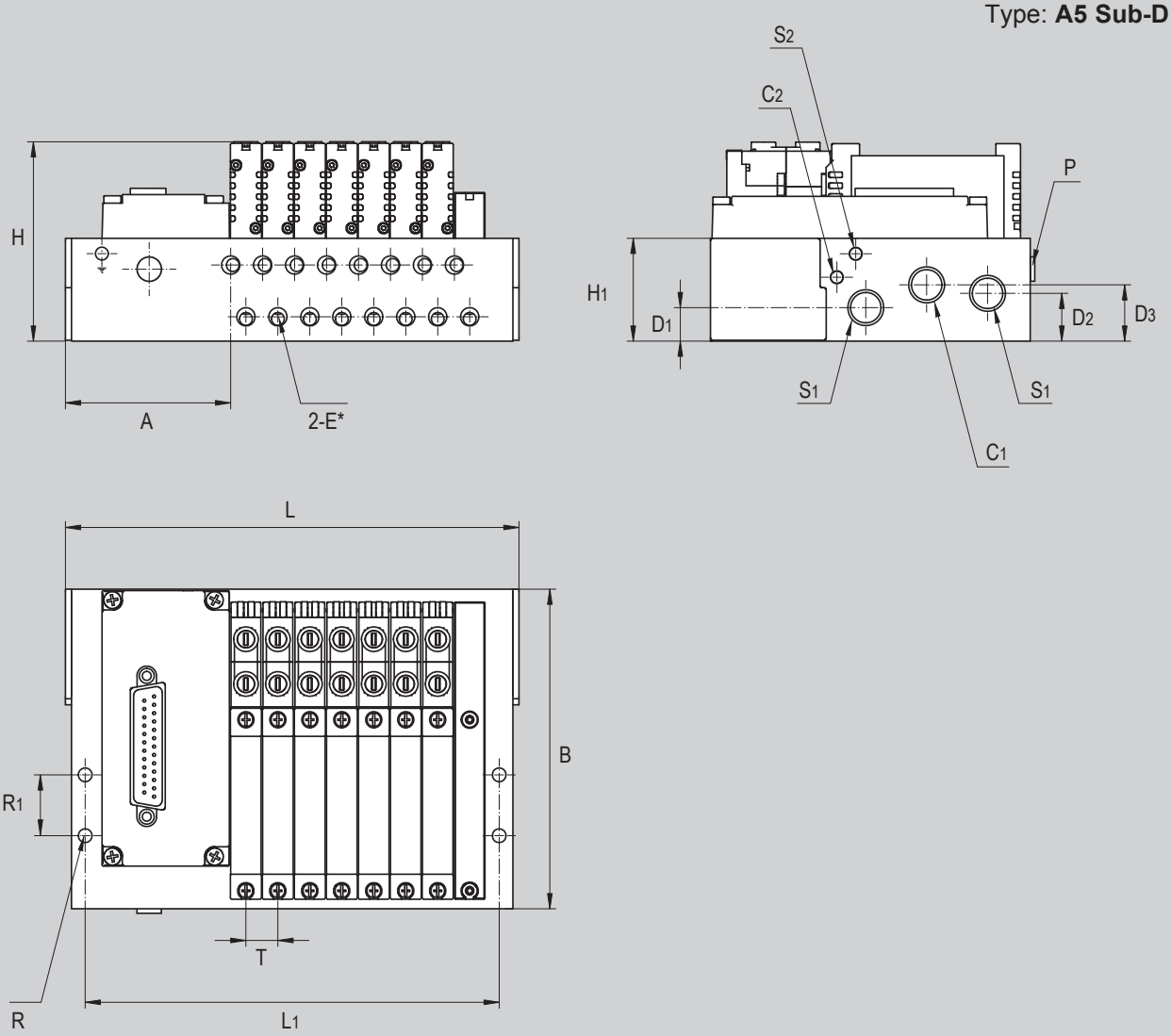

Item	Size	A	B	C1	C2	D1	D2	D3	E*	H	H1	L**	L1**	P	ØR	R1	S1	S2	T
A51005..	10 mm	54,3	105	G1/4"	M5	11	15,7	18,5	M7	65	33,8	65 + (nxT)	52 + (nxT)	M5	4,5	20	G1/4"	M5	10,5
A51405..	14 mm	56	105	G1/4"	M5	10	15,7	18,5	G1/8"	65	33,8	64 + (nxT)	54 + (nxT)	M5	4,5	20	G1/4"	M5	16

Notes

Valve terminal is supplied complete, already assembled and tested. Fittings, exhaust silencers and interface connection cables to be ordered separately.

*There are 2 connections for each position on the base, therefore overall number of connections depends on the configuration.

**Quotes L and L1 are to be calculated by the number of positions of the sub-base. The letter "n" indicated in the quote must be replaced with the number of positions of the sub-base.

Valve terminals series A5 complete and assembled
With IO-Link® interface

Main features

Version	Code	Item	Symbol
Valve terminal size 10 mm with IO-Link® interface up to 8 positions	*	A51006..	IO-Link
Valve terminal size 14 mm with IO-Link® interface up to 8 positions	*	A51406..	
Valve terminal size 10 mm with IO-Link® interface up to 16 positions	*	A51007..	
Valve terminal size 14 mm with IO-Link® interface up to 16 positions	*	A51407..	
Valve terminal size 10 mm with IO-Link® interface up to 24 positions	*	A51008..	
Valve terminal size 14 mm with IO-Link® interface up to 24 positions	*	A51408..	

*For the full article and code please see page 2.70.3

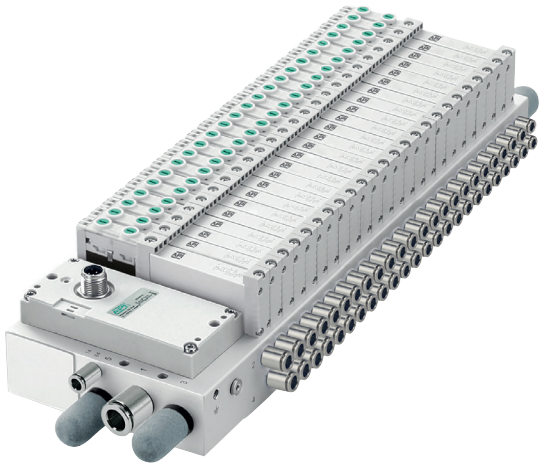

Technical data

Item		A51006..	A51007..	A51008..	A51406..	A51407..	A51408..
Size		10 mm			14 mm		
Communication protocol		IO-Link®					
Interface module features		See from page 2.73.30					
Positions on sub-base		4 ÷ 8 (4, 5, 6, 7, 8)	4 ÷ 16 (4, 5, 6, 7, 8, 9, 10, 12, 14, 16)	4 ÷ 24 (4, 5, 6, 7, 8, 9, 10, 12, 14, 16, 20, 24)	4 ÷ 8 (4, 5, 6, 7, 8)	4 ÷ 16 (4, 5, 6, 7, 8, 9, 10, 12, 14, 16)	4 ÷ 24 (4, 5, 6, 7, 8, 9, 10, 12, 14, 16, 20, 24)
Fluid		Compressed air with or without lubrication. Lubrication, if started, must be continued.					
Pressure range	Minimum	2 bar (5/2) - 3 bar (5/3) - 2,5 bar (2-3/2)					
	Maximum	8 bar					
Temperature range		-5°C ÷ +60°C					
Flow at 6 bar with ΔP 1bar		300 l/min			600 l/min		
Sub-base air supply		G 1/4"					
Sub-base exhausts		G 1/4"					
Connection for external piloting(1)		M5					
Sub-base outlets		M7			G 1/8"		
Voltage		24 VDC					
Electrical consumption		1,2 W					
Maximum number of valves(2)		8	16	24	8	16	24
Internal data transmission		With integrated PCB					
Manual override		"Push" and bistable					

Notes

For possible configurations of the valve terminal see from page 2.70.3;
The configuration does not include fittings, exhaust silencers and connection cables for the communication interface, are to be ordered separately.
For inlet, exhaust and exthernal piloting fittings see from page 4.3.1; For silencers see from page 4.150.1; For diaphragms, plugs and outlet fittings, see from page 2.75.20; For communication cables see page 2.75.44

(1) In case of external pilot configuration.

(2) Depending on the number of positions on the sub-base. For valves features, see from page 2.71.1; For sub-bases features, see from page 2.72.1

Standard dimensions

Type: **A5 IO-Link®**

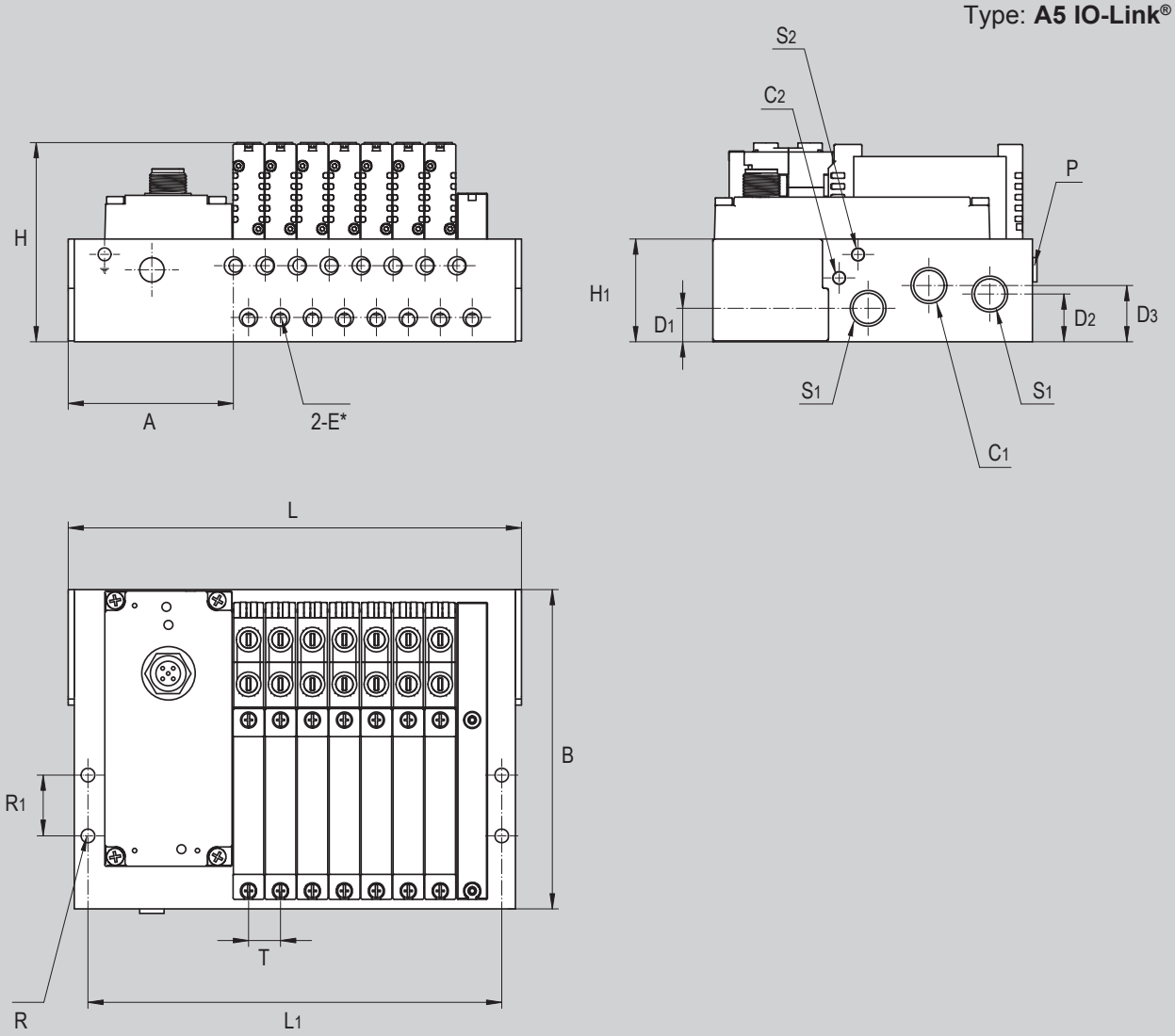

Item	Size	A	B	C1	C2	D1	D2	D3	E*	H	H1	L**	L1**	P	ØR	R1	S1	S2	T
A51006..	10 mm	54,3	105	G1/4"	M5	11	15,7	18,5	M7	65	33,8	65 + (nxT)	52 + (nxT)	M5	4,5	20	G1/4"	M5	10,5
A51007..	10 mm	54,3	105	G1/4"	M5	11	15,7	18,5	M7	65	33,8	65 + (nxT)	52 + (nxT)	M5	4,5	20	G1/4"	M5	10,5
A51008..	10 mm	54,3	105	G1/4"	M5	11	15,7	18,5	M7	65	33,8	65 + (nxT)	52 + (nxT)	M5	4,5	20	G1/4"	M5	10,5
A51406..	14 mm	56	105	G1/4"	M5	10	15,7	18,5	G1/8"	65	33,8	64 + (nxT)	54 + (nxT)	M5	4,5	20	G1/4"	M5	16
A51407..	14 mm	56	105	G1/4"	M5	10	15,7	18,5	G1/8"	65	33,8	64 + (nxT)	54 + (nxT)	M5	4,5	20	G1/4"	M5	16
A51408..	14 mm	56	105	G1/4"	M5	10	15,7	18,5	G1/8"	65	33,8	64 + (nxT)	54 + (nxT)	M5	4,5	20	G1/4"	M5	16

Notes

Valve terminal is supplied complete, already assembled and tested. Fittings, exhaust silencers and interface connection cables to be ordered separately.

*There are 2 connections for each position on the base, therefore overall number of connections depends on the configuration.

**Quotes L and L1 are to be calculated by the number of positions of the sub-base. The letter "n" indicated in the quote must be replaced with the number of positions of the sub-base.

ACCESSORIES

for valve terminals series A5



Features and certifications

Accessories for valve terminals serie A5 to use with the sub-bases (plugs and screws for piloting switch, blanking plugs for unused positions, diaphragms for separated feeding and exhausts, push-in fittings for outlets) and with the interfaces (communication cables), available for all sizes and types.
Accessories are supplied conforming to Reach and RoHS directives as standard.

Accessories for sub-bases

da pag. 2.75.20



Accessories for valve terminals series A5.
Accessories for sub-bases.
Plugs and screws for the piloting switch, blanking plugs for unused positions, diaphragms for separated feeding and exhausts, push-in fittings for outlets.

Cables for interfaces

da pag. 2.75.40



Accessories for valve terminals series A5
Cables compatible with modular communication interfaces type Fieldbus, Sub-D 25 poles and IO-Link®, available in different types and configurations.

Accessories for valve terminals series A5

Accessories for sub-bases. Plugs and screws for piloting switch and diaphragms for separated feeding and exhausts

Main features

Code	Item	Description
022521	A0090505	Plug for the pilot switching connection



Technical data

Item	A0090505	
Code	022521	
Temperature	-5°C ÷ +60°C	
Thread size	M5	
Matching	A5B10	A5B14
Function	For internal piloting configuration (see page 2.70.6)	
Installation	See from page 2.70.4	
Mounting	Allen key	

Materials

Description	Material
Body	Nickel-plated brass
Seals	NBR

Main features

Code	Item	Description
036180	A5BAV	Screw for the pilot switching connection



Technical data

Item	A5BAV	
Code	036180	
Temperature	-5°C ÷ +60°C	
Thread size	M5	
Matching	A5B10	A5B14
Function	For external piloting configuration (see page 2.70.6)	
Installation	See from page 2.70.4	
Mounting	Flat-blade screwdriver	

Materials

Description	Material
Body	Brass
Seals	NBR

Main features

Code	Item	Description
036183	A5BMC	Diaphragm for separating feeding or exhausts



Technical data

Item	A5BMC	
Code	036183	
Temperature	-5°C ÷ +60°C	
Thread size	G 1/4"	
Matching	A5B10	A5B14
Function	For separated feeding or exhausts configuration	
Installation	See page 2.70.6	
Mounting	Flat-blade screwdriver	

Materials

Description	Material
Body	Brass
Seals	NBR

Main features

Code	Item	Description
036181	A5BTC10	Blanking plug for unused positions on 10mm sub-bases
036182	A5BTC14	Blanking plug for unused positions on 14mm sub-bases



Technical data

Item	A5BTC10	A5BTC14
Code	036181	036182
Temperature	-5°C ÷ +60°C	
Size	10 mm	14 mm
Matching	A5B10	A5B14
Function	For blanking any unused position on the sub-base	
Installation	In the unused position on the sub-base	
Mounting screws	Ø 2,55	Ø 3

Materials

Description	Material
Body	Aluminium
Seals	NBR

Main features

Code	Item	Description
022528	A0090707	Blanking plug for connections on 10 mm sub-base
022522	A0091818	Blanking plug for connections on 14 mm sub-base
022521	A0090505	Blanking plug for feeding or exhaust connection
022523	A0091414	Blanking plug for feeding or exhaust connection



Technical data

Item	A0090707	A0091818	A0090505	A0091414
Code	022528	022522	022521	022523
Temperature	-10°C ÷ +60°C			
Thread size	M7	G 1/8"	M5	G 1/4"
Matching	A5B10	A5B14	A5B10 A5B14	A5B10 A5B14
Installation	Connection E (see page 2.72.11 and 2.72.22)		See page 2.70.4	
Mounting	Allen key			

Materials

Description	Material
Body	Nickel-plated brass
Seals	NBR

Accessories for valve terminals series A5

Accessories for sub-bases. Push-in fittings for outlets

Main features

Code	Item	Description
029109	RT1204M7	Fitting for outlets on 10 mm sub-bases
029110	RT1206M7	
020188	R1204M7	Fitting for outlets on 14 mm sub-bases
020189	R1206M7	



Technical data

Item	RT1204M7	RT1206M7	R1204M7	R1206M7
Code	029109	029110	020188	020189
Temperature	-20°C ÷ +70°C		-20°C ÷ +80°C	
Size	10 mm		14 mm	
Matching	A5B10		A5B14	
Function	Connections for sub-base outlets			
Dimensions	See page 4.7.4		See page 4.3.5	
Thread	M7			
Tube	Ø 4	Ø 6	Ø 4	Ø 6

Materials

Description	Material
RT12..	See page 4.7.1
R12..	See page 4.3.5

Main features

CAVFBFD

Type



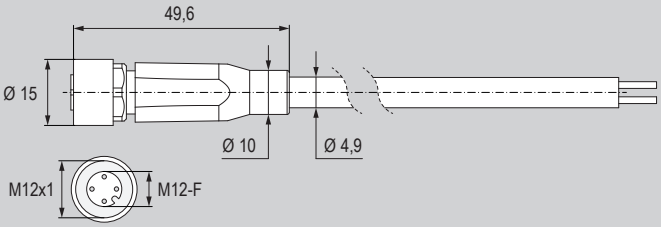

Features

Code	Item	Description
036108	CAVFBFD02	Power cable for Fieldbus interface, with M12 Female connector on input, and direct output with flexible cable. Length 2 m.
036109	CAVFBFD04	Power cable for Fieldbus interface, with M12 Female connector on input, and direct output with flexible cable. Length 4 m.

Technical Data

Type	CAVFBFD02	CAVFBFD04
Cable	4 x 0,34 mm²	
Cable length	2 mt.	4 mt.
Electrical connection	M12 Female connector / direct flexible cable	
Temperature range	-5°C ÷ +80°C	
Protection grade	IP 65	
Interface matching	A501, A502, A503, A504, A509	

Connector features

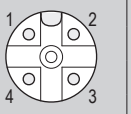

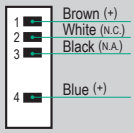

Pin	Function	
1	UA	Actuator power supply
2	GND	Actuator power supply
3	US	Bus power supply
4	GND	Bus power supply

Materials

Description	Material
Cable sheathing	Grey PVC
Connector sheath	Black PVC
Connector housing	Brass
Connector contacts	Polypropylene

Main features

CAVFBMD

Type



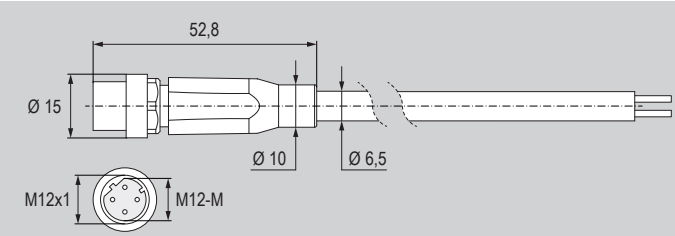

Features

Code	Item	Description
036110	CAVFBMD02	Communication cable for Fieldbus interface, with M12 Male connector on input, and direct output with flexible cable. Length 2 m.
036111	CAVFBMD04	Communication cable for Fieldbus interface, with M12 Male connector on input, and direct output with flexible cable. Length 4 m.

Technical Data

Type	CAVFBMD02	CAVFBMD04
Cable	AWG22	
Cable length	2 mt.	4 mt.
Electrical connection	M12 Male connector / direct flexible cable	
Temperature range	-5°C ÷ +80°C	
Protection grade	IP 65	
Interface matching	A501, A502, A503, A504 (input & output) A509 (output only)	

Connector features

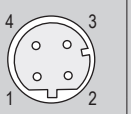

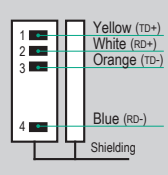

Pin	Function	
1	TD+	Data transfer
2	RD+	Data receiving
3	TD-	Data transmission
4	RD-	Data receiving

Materials

Description	Material
Cable sheathing	Green PVC
Connector sheath	Black PVC
Connector housing	Brass
Connector contacts	Brass

Main features

CAVPBFD

Type



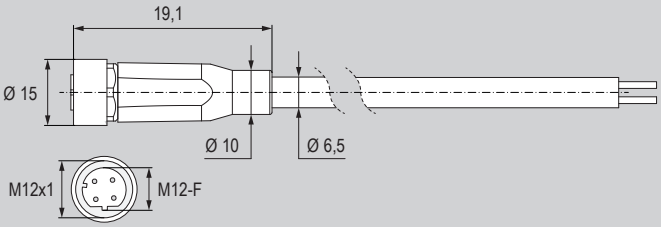

Features

Code	Item	Description
036210	CAVPBFD02	Communication cable for Fieldbus interface, with M12 Female connector on input, and direct output with flexible cable. Length 2 m.
036211	CAVPBFD04	Communication cable for Fieldbus interface, with M12 Female connector on input, and direct output with flexible cable. Length 4 m.

Technical Data

Type	CAVFBMD02	CAVFBMD04
Cable	AWG22	
Cable length	2 mt.	4 mt.
Electrical connection	M12 Female connector / direct flexible cable	
Temperature range	-5°C ÷ +80°C	
Protection grade	IP 65	
Interface matching	A509 (input only)	

Connector features

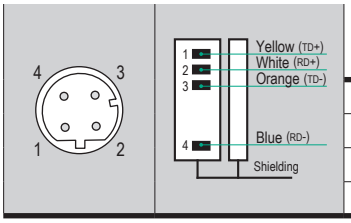

Pin	Function	
1	TD+	Data transfer
2	RD+	Data receiving
3	TD-	Data transmission
4	RD-	Data receiving

Materials

Description	Material
Cable sheathing	Green PVC
Connector sheath	Black PVC
Connector housing	Brass
Connector contacts	Polypropylene

Main features

CAVFBMM

Type



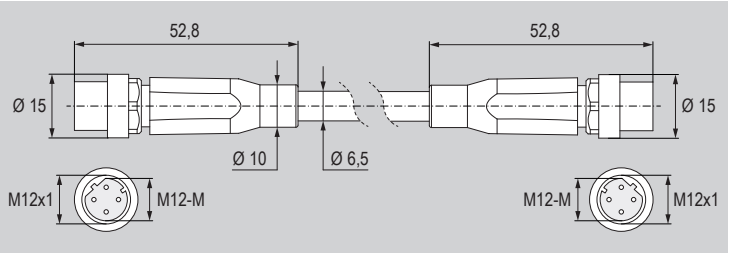

Features

Code	Item	Description
036112	CAVFBMM02	Communication cable for Fieldbus interface, with M12 Male connector on input and output. Length 2 m.
036113	CAVFBMM04	Communication cable for Fieldbus interface, with M12 Male connector on input and output. Length 4 m.

Technical Data

Type	CAVFBMM02	CAVFBMM04
Cable	AWG22	
Cable length	2 mt.	4 mt.
Electrical connection	M12 Male connector / M12 Male connector	
Temperature range	-5°C ÷ +80°C	
Protection grade	IP 65	
Interface matching	A501, A502, A503, A504 (input & output) A509 (output only)	

Connector features

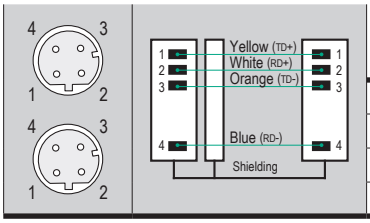

Pin	Function	
1	TD+	Data transfer
2	RD+	Data receiving
3	TD-	Data transmission
4	RD-	Data receiving

Materials

Description	Material
Cable sheathing	Green PVC
Connector sheath	Black PVC
Connector housing	Brass
Connector contacts	Brass

Main features

CAVFBMR

Type

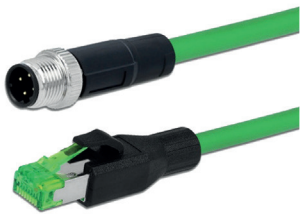

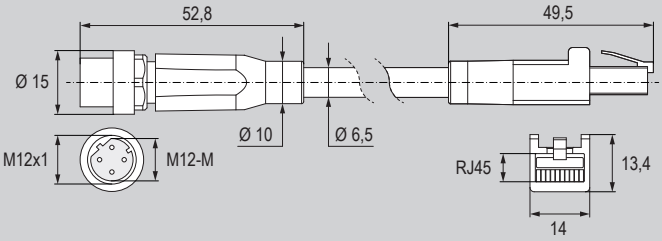

Features

Code	Item	Description
036114	CAVFBMR02	Communication cable for Fieldbus interface, with M12 Male connector input, and RJ45 network connector output. Length 2 m.
036115	CAVFBMR04	Communication cable for Fieldbus interface, with M12 Male connector input, and RJ45 network connector output. Length 4 m.

Technical Data

Type	CAVFBMR02	CAVPBMR02	CAVFBMR04	CAVPBMR04
Cable	AWG22			
Cable length	2 mt.		4 mt.	
Electrical connection	M12 Male connector / RJ45 connector			
Temperature range	-5°C ÷ +80°C			
Protection grade	IP 65			
Interface matching	A501, A502, A503, A504 (input & output) A509 (output only)			

Connector features

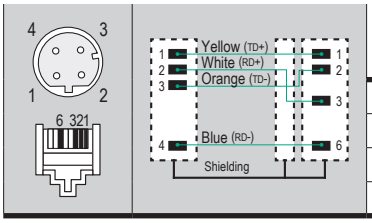

Pin	Function	
1	TD+	Data transfer
2	RD+	Data receiving
3	TD-	Data transmission
4	RD-	Data receiving

Materials

Description	Material
Cable sheathing	Green PVC
Connector sheath	Black PVC
Connector housing	Brass
Connector contacts	Brass

Main features

CAVSDFD

758-2464 Type

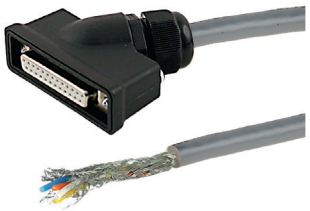

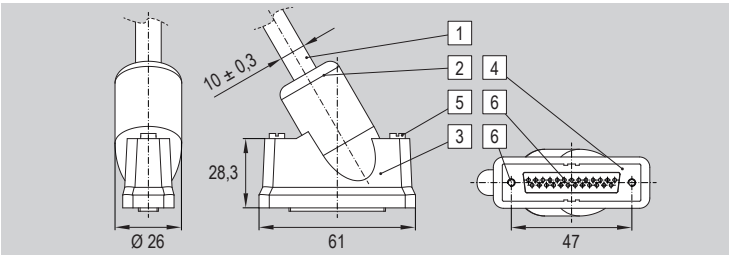

Features

Code	Item	Description
036116	CAVSDFD02	Communication cable for Sub-D multipole interface, with Sub-D 25-pole Female connector on input, and direct output with flexible cable. Length 2 m.
036117	CAVSDFD05	Communication cable for Sub-D multipole interface, with Sub-D 25-pole Female connector on input, and direct output with flexible cable. Length 5 m.
036204	CAVSDFD15	Communication cable for Sub-D multipole interface, with Sub-D 25-pole Female connector on input, and direct output with flexible cable. Length 15 m.

Materials

Position	Description	Material
1	Cable ferrule	Gray PVC (RAL7001)
2	Cable ferrule	Black polypropylene
3	Connector jacket	Black polypropylene
4	Connector housing	Steel
5	Connector screws	Steel
6	Connector contacts	Gold-plated brass
7	Connector nuts	Nickel-plated brass

Connector features

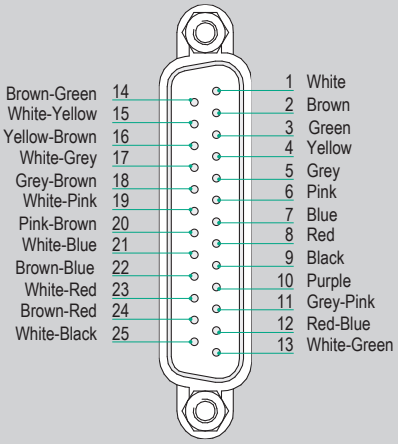

Technical Data

Type	CAVSDFD02	CAVSDFD05	CAVSDFD15
Cable	25 x 0,34 mm², flexible, fireproof		
Cable normative	UL758-2464		
Cable length	2 mt.	5 mt.	15 mt.
Electrical connection	M12 female connector		
Temperature range	-5°C ÷ +80°C		
Protection grade	IP 65		
Maximum clamping force of cable ferrule	3 Nm ± 20%		
Maximum tightening force of the connector screws	0,5 Nm ± 50%		

Main features

CAVILFD

Type



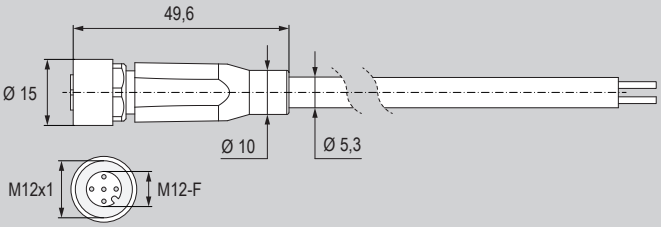

Features

Code	Item	Description
036118	CAVILFD02	Communication cable for IO-Link® interface, with M12 Female connector on input, and direct output with flexible cable. Length 2 m.
036119	CAVILFD04	Communication cable for IO-Link® interface, with M12 Female connector on input, and direct output with flexible cable. Length 4 m.

Technical Data

Type	CAVILFD02	CAVILFD04
Cable	5 x 0,34 mm2	
Cable length	2 mt.	4 mt.
Electrical connection	M12 Female connector	
Temperature range	-20°C ÷ +80°C	
Protection grade	IP 65	

Connector features



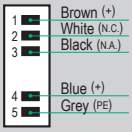

Pin	Function	
1	UA	Actuator power supply
2	GND	Actuator power supply
3	US	Bus power supply
4	GND	Bus power supply

Materials

Description	Material
Cable sheathing	Grey PVC
Connector sheath	Black PVC
Connector housing	Brass
Connector contacts	Polypropylene

VALVES ISO 5599/1

solenoid operated

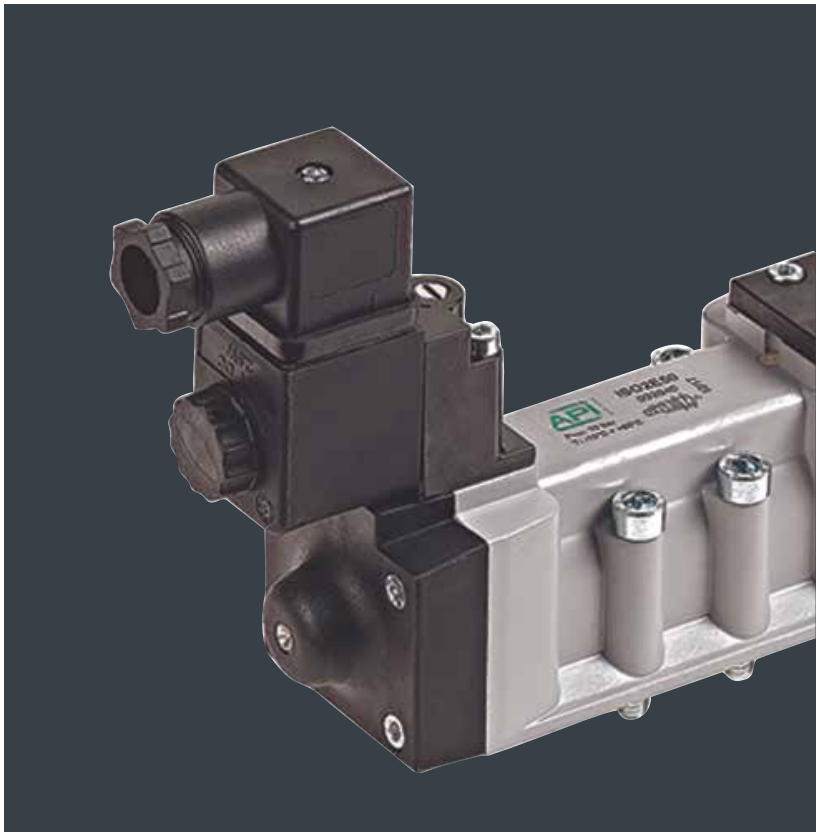

Find out our
key products

- **Solution for most applications**
- **Easy and intuitive choice**
- **Excellent value for money**
- **Wide availability**
- **Fast delivery**

Features and certifications

Spool valves confoming to ISO 5599/1 standards, with static seals, high flow, for sub-base mounting only.
Available in size ISO1 and ISO2, with CNOMO or In Line pilot (only for size ISO1), solenoid operated, also with external air pilot, 5/2 solenoid/spring, 5/2 solenoid/solenoid, 5/2 solenoid/solenoid differential, 5/3 closed centres, 5/3 open centres and 5/3 pressurized centres.
Coils and connectors to be ordered separately.
Supplied as standard in compliance to Reach and RoHS directives, and SIL certified. On request the valve body can be supplied according to 2014/34/EU ATEX Directive, classification Ex h, and also complete with ATEX coil and connector, in different classifications (see from page 2.320.1).

Series ISO1 5/2 Solenoid/Spring

from page 2.91.30



Series of spool valves confoming to ISO 5599/1 standards, with static seals, high flow, for sub-base mounting only.
Available in size ISO1 with CNOMO pilot, 5/2 solenoid/spring, solenoid operated also with external air pilot.
Coils and connectors to be ordered separately.

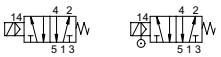

Series ISO1 5/2 Solenoid/Solenoid

from page 2.91.50



Series of spool valves confoming to ISO 5599/1 standards, with static seals, high flow, for sub-base mounting only.
Available in size ISO1 with CNOMO pilot, 5/2 solenoid/solenoid and 5/2 solenoid/solenoid differential, solenoid operated also with external air pilot.
Coils and connectors to be ordered separately.

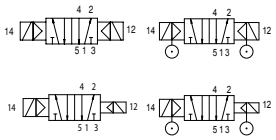

Series ISO1 5/3

from page 2.91.70



Series of spool valves confoming to ISO 5599/1 standards, with static seals, high flow, for sub-base mounting only.
Available in size ISO1 with CNOMO pilot, 5/3 closed centres, 5/3 open centres e 5/3 pressurized centres, solenoid operated also with external air pilot.
Coils and connectors to be ordered separately.

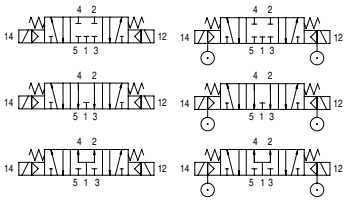

Series ISO1 5/2 - 5/3 ATEX

from page 2.320.1



Series of spool valves confoming to ISO 5599/1 standards, with static seals, high flow, for sub-base mounting only.
Available in size ISO1 with CNOMO pilot, 5/2 solenoid/spring, 5/2 solenoid/solenoid and solenoid/solenoid differential, 5/3 open centres, closed centres and pressurized centres, solenoid operated, available according to 2014/34/EU ATEX Directive in different classifications.

Series ISO1..L 5/2 Solenoid/Spring

from page 2.92.30



Series of spool valves confoming to ISO 5599/1 standards, with static seals, high flow, for sub-base mounting only.
Available in size ISO1 with In Line pilot, 5/2 solenoid/spring, solenoid operated also with external air pilot.
Coils and connectors to be ordered separately.

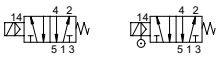

Series ISO1..L 5/2 Solenoid/Solenoid

from page 2.92.50



Series of spool valves confoming to ISO 5599/1 standards, with static seals, high flow, for sub-base mounting only.
Available in size ISO1 with In Line pilot, 5/2 solenoid/solenoid and 5/2 solenoid/solenoid differential, solenoid operated also with external air pilot.
Coils and connectors to be ordered separately.

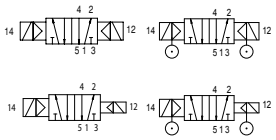

Series ISO1..L 5/3

from page 2.92.70



Series of spool valves confoming to ISO 5599/1 standards, with static seals, high flow, for sub-base mounting only.
Available in size ISO1 with In Line pilot, 5/3 closed centres, 5/3 open centres e 5/3 pressurized centres, solenoid operated also with external air pilot.
Coils and connectors to be ordered separately.

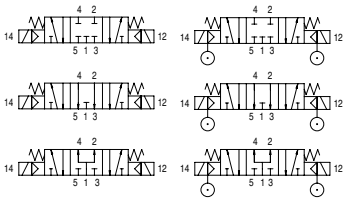

Series ISO1..L 5/2 - 5/3 ATEX

from page 2.320.1



Series of spool valves confoming to ISO 5599/1 standards, with static seals, high flow, for sub-base mounting only.
Available in size ISO1 with In Line pilot, 5/2 solenoid/spring, 5/2 solenoid/solenoid and solenoid/solenoid differential, 5/3 open centres, closed centres and pressurized centres, solenoid operated, available according to 2014/34/EU ATEX Directive in different classifications.

Series ISO2 5/2 Solenoid/Spring

from page 2.94.30



Series of spool valves confoming to ISO 5599/1 standards, with static seals, high flow, for sub-base mounting only.
Available in size ISO2 with CNOMO pilot, 5/2 solenoid/spring, solenoid operated also with external air pilot.
Coils and connectors to be ordered separately.

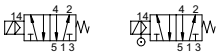

Series ISO2 5/2 Solenoid/Solenoid

from page 2.94.50

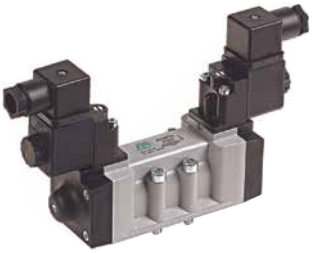

Series of spool valves confoming to ISO 5599/1 standards, with static seals, high flow, for sub-base mounting only.
Available in size ISO2 with CNOMO pilot, 5/2 solenoid/solenoid and 5/2 solenoid/solenoid differential, solenoid operated also with external air pilot.
Coils and connectors to be ordered separately.

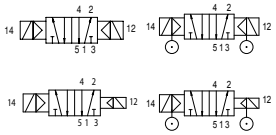

Series ISO2 5/3

from page 2.94.70

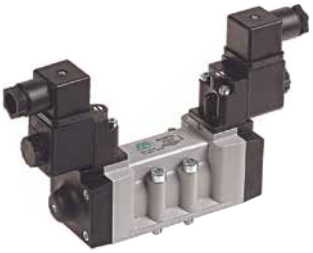

Series of spool valves confoming to ISO 5599/1 standards, with static seals, high flow, for sub-base mounting only.
Available in size ISO2 with CNOMO pilot, 5/3 closed centres, 5/3 open centres e 5/3 pressurized centres, solenoid operated also with external air pilot.
Coils and connectors to be ordered separately.

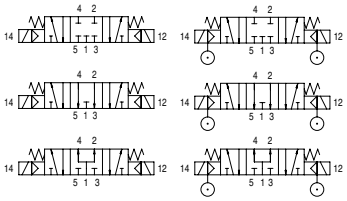

Series ISO2 5/2 - 5/3 ATEX

from page 2.320.1



Series of spool valves confoming to ISO 5599/1 standards, with static seals, high flow, for sub-base mounting only.
Available in size ISO2 with CNOMO pilot, 5/2 solenoid/spring, 5/2 solenoid/solenoid and solenoid/solenoid differential, 5/3 open centres, closed centres and pressurized centres, solenoid operated, available according to 2014/34/EU ATEX Directive in different classifications.

Options

Description	Symbol	Suffix
ATEX valve body*	Ex	/ATEX
Special versions on request		/S

The options, when this is possible, can be combined with each other. For code key see from page 2.90.7
*For valves with ATEX coil and connector, in different classifications, see page 2.320.1.

Standard materials

Size: **ISO1**
ISO2

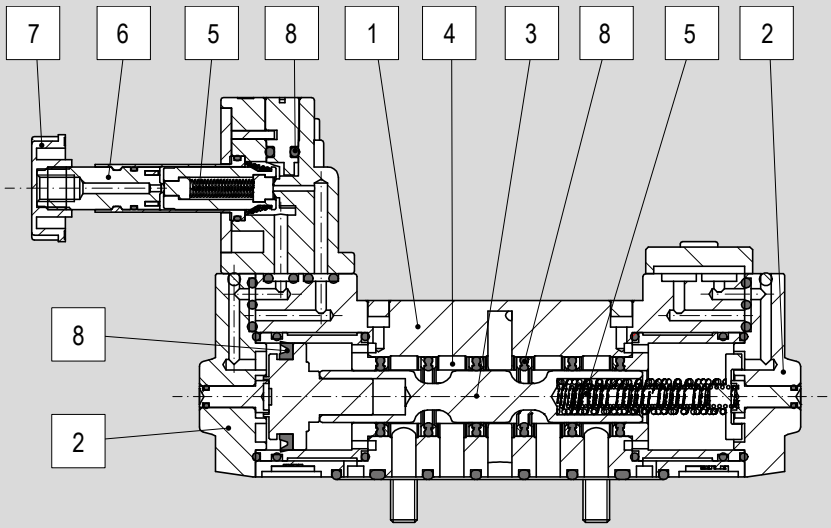

Size: **ISO1..L**

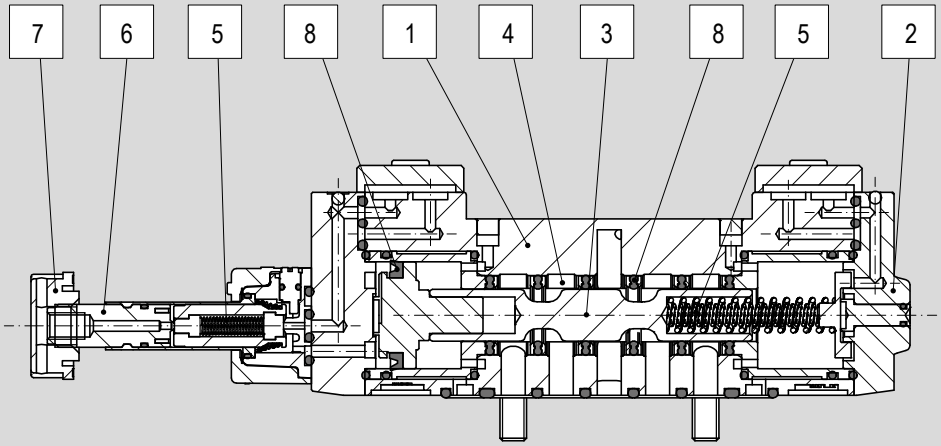

Position	Description	Material		
		ISO1	ISO1..L	ISO2
1	Body	Die-cast painted aluminium		
2	Covers	PBT		
3	Spool	Hard anodized aluminium		
4	Distancers	Aluminium		
5	Springs	Spring steel		
6	Plunger	Brass		
7	Locking nut	Plastic		
8	Seals	HNBR		

For coils materials see page 2.315.1.
For connectors materials see page 2.318.1

Code key

Series	Size	Actuation	Pilot	Function	/	ATEX valve body
ISO	**1**	**E**		**50**	**/**	

- Series: ISO
- Size: 1 = size 1; 2 = size 2
- Actuation: E = Electric; K = Electric with external air pilot
- Pilot: = Cnomo; L (1) = In Line
- Function: 50 = 5/2 Solenoid/Spring; 51 = 5/2 Solenoid/Solenoid; 52 = 5/2 Solenoid/Solenoid differential; 70 = 5/3 Closed Centres; 71 = 5/3 Open Centres; 72 = 5/3 Pressurized Centres
- ATEX valve body: ATEX — CE Ex II 2G Ex h IIB T5 Gb; II 2D Ex h IIIC T100°C Db

ATEX note

For ATEX coils and connectors choice, classification, features, dimensions and matching, see page 2.320.1

How to order

Series	Size	Actuation	Pilot	Function
ISO	**1**	**E**		**50**

Notes

Options in the same grid are alternative to each others.

(1) In line pilot (L) available only for size 1.

For standard materials see page 2.90.6

Coils and connectors to be ordered separately, see page 2.97.1

For further information on the ATEX 2014/34/EU Directive, on classifications and protections, see from page III.1

Accessories

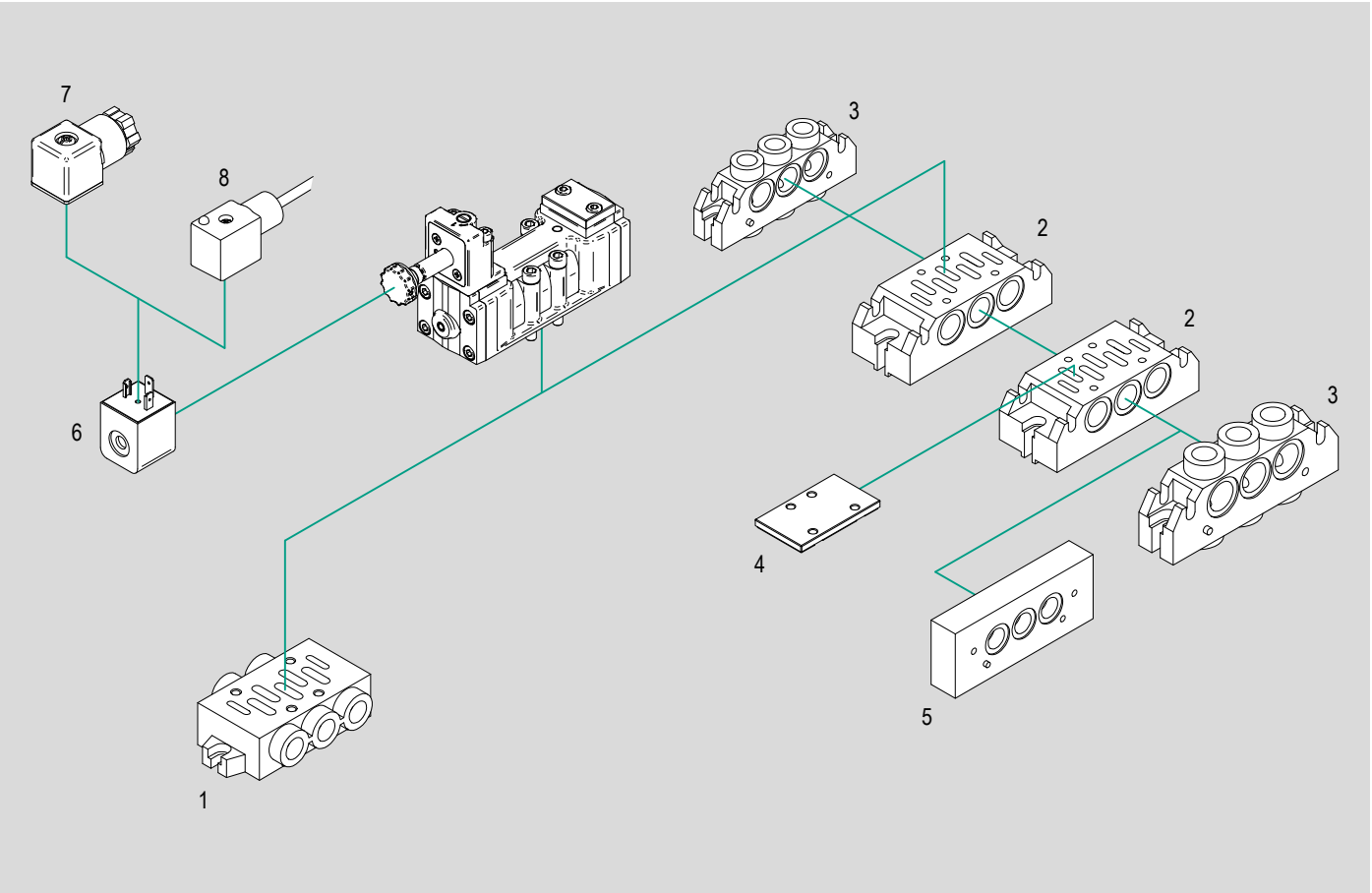

N.	Item	Description	Compliance	Matching			Code key page	Data sheet page
				ISO1	ISO1..L	ISO2		
1	SBA1S	Single sub-base	ISO 5599/1	●	●	-	2.97.1	2.107.10
	SBA2S			-	-	●		2.107.30
2	SBA1M	Manifold sub-base	ISO 5599/1	●	●	-		2.107.20
	SBA2M			-	-	●		2.107.40
3	SBA1A SBA1C	End plates (for manifold)	ISO 5599/1	●	●	-		2.107.51
	SBA2A SBA2C			-	-	●		
4	SBA1T	Blanking plate (for manifold)	ISO 5599/1	●	●	-		2.107.50
	SBA2T			-	-	●		
5	SBA1A2	Interface ISO1/ISO2 (for manifold)	ISO 5599/1	●	●	●		
6	ASA12..	Coil	EN60204 VDE0580	●	●	●		2.315.10
	ASA2..		EN60204.1 VDE0580	●	●	●		2.315.11
7	A12209..	Connector	VDE 0110 - 1/89	●	●	●		2.318.12
	A18209..			●	●	●		2.318.14
8	A12209..K	Cabled connector	VDE 0110 - 1/89	●	●	●		2.318.12
	A18209..K			●	●	●		2.318.14

Key
● matching accessory; - not matching accessory

Valves ISO 5599/1 solenoid operated

ISO1, CNOMO pilot, 5/2 solenoid/spring

Main features

Version	Code	Item	Symbol
5/2 solenoid/spring	032020	ISO1E50	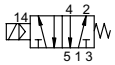
5/2 solenoid/spring with external air pilot	032021	ISO1K50	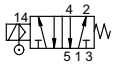



Technical data

Version	5/2 solenoid/spring	5/2 solenoid/spring with external air pilot
Code	032020	032021
Item	ISO1E50	ISO1K50
Size	ISO1	
Fluid	Compressed air with or without lubrication. Lubrication, if started, must be continued.	
Pilot	CNOMO	
Piloting	Internal	With external air pilot
Pressure range	2,5 ÷ 10 bar	0 ÷ 10 bar
Minimum external air pressure	-	2,5 bar
Temperature range	-10°C ÷ +60°C	
Plunger Ø	9 mm	
Orifice Ø	8,5 mm	
Flow at 6 bar with ΔP 1 bar	1.100 Nl/min.	
Mounting	In every position	
Manual override	Bistable	

Notes

Coils and connectors for standard versions to be ordered separately.
For coils type ASA12 and ASA2 see from page 2.315.1. For connectors type A122 e A182 see from page 2.318.1

For valves complete with ATEX coil and connector, in different classifications, see page 2.320.1

Standard dimensions

Type: **5/2 solenoid/spring**

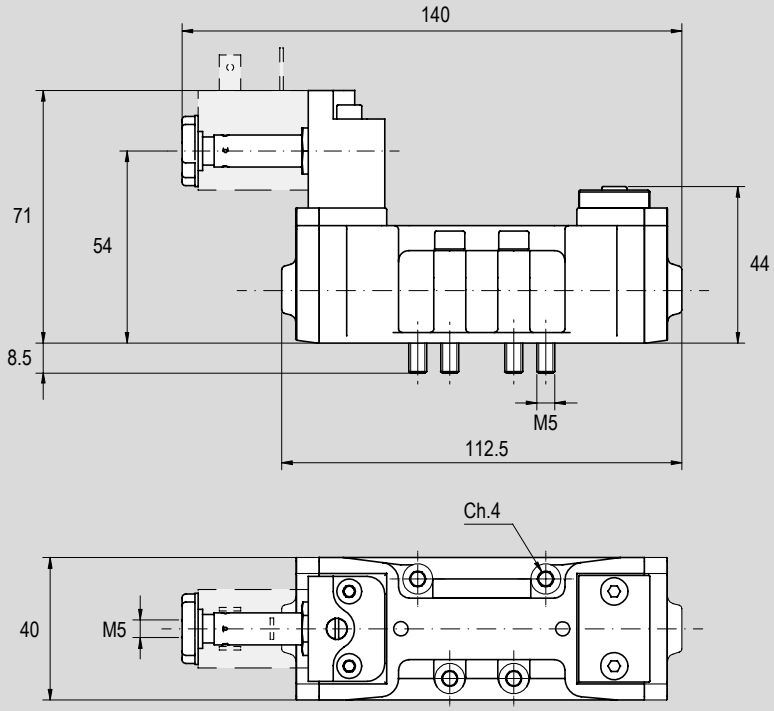

Version	Symbol	Code	Item
ISO1 CNOMO pilot 5/2 solenoid/spring	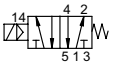	032020	ISO1E50
ISO1 CNOMO pilot 5/2 solenoid/spring with external air pilot	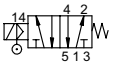	032021	ISO1K50

Valves ISO 5599/1 solenoid operated

ISO1, CNOMO pilot, 5/2 solenoid/solenoid

Main features

Version	Code	Item	Symbol
5/2 solenoid/solenoid	032030	ISO1E51	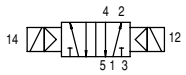
5/2 solenoid/solenoid differential	032037	ISO1E52	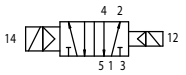
5/2 solenoid/solenoid with external air pilot	032044	ISO1K51	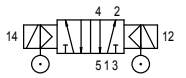
5/2 solenoid/solenoid differential with external air pilot	032048	ISO1K52	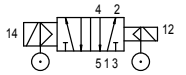

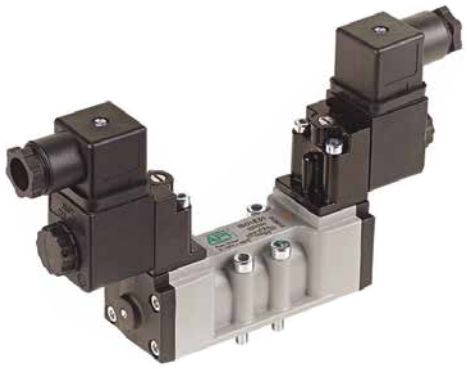

Technical data

Version	5/2 solenoid/solenoid	5/2 solenoid/solenoid differential	5/2 solenoid/solenoid with external air pilot	5/2 solenoid/solenoid differential with external air pilot
Code	032030	032037	032044	032048
Item	ISO1E51	ISO1E52	ISO1K51	ISO1K52
Size	ISO1			
Fluid	Compressed air with or without lubrication. Lubrication, if started, must be continued.			
Pilot	CNOMO			
Piloting	Internal		With external air pilot	
Pressure range	1 ÷ 10 bar		0 ÷ 10 bar	
Minimum external air pressure	-		1 bar	
Temperature range	-10°C ÷ +60°C			
Plunger Ø	9 mm			
Orifice Ø	8,5 mm			
Flow at 6 bar with ΔP 1 bar	1.100 Nl/min.			
Mounting	In every position			
Manual override	Bistable			

Notes

Coils and connectors for standard versions to be ordered separately.
For coils type ASA12 and ASA2 see from page 2.315.1. For connectors type A122 e A182 see from page 2.318.1

For valves complete with ATEX coil and connector, in different classifications, see page 2.320.1

Standard dimensions

Type: **5/2 solenoid/solenoid**

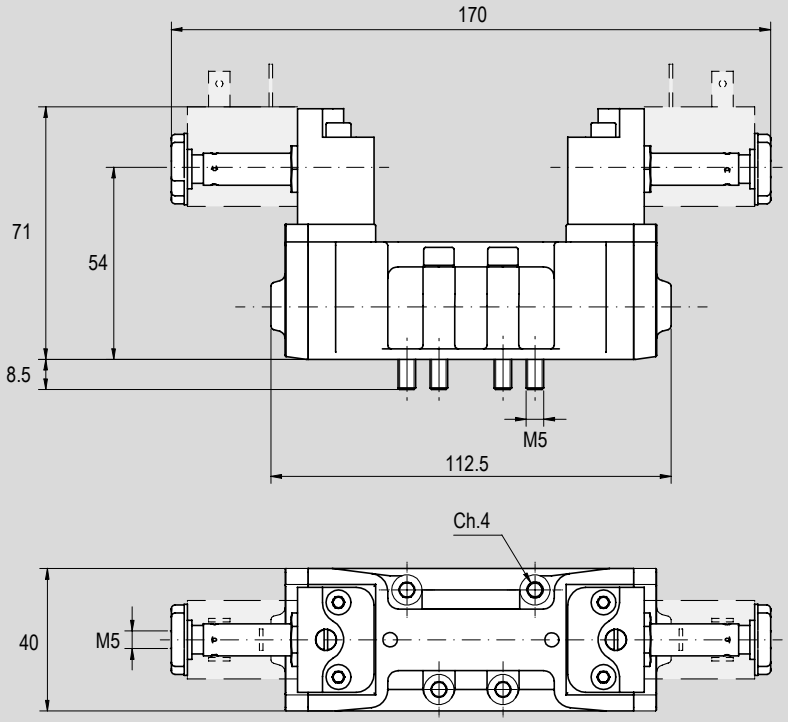

Version	Symbol	Code	Item
ISO1 CNOMO pilot 5/2 solenoid/solenoid	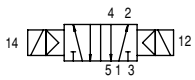	032030	ISO1E51
ISO1 CNOMO pilot 5/2 solenoid/solenoid differential	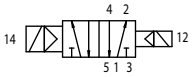	032037	ISO1E52
ISO1 CNOMO pilot 5/2 solenoid/solenoid with external air pilot	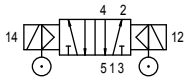	032044	ISO1K51
ISO1 CNOMO pilot 5/2 solenoid/solenoid differential with external air pilot	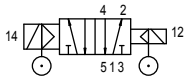	032048	ISO1K52

Valves ISO 5599/1 solenoid operated

ISO1, CNOMO pilot, 5/3

Main features

Version	Code	Item	Symbol
5/3 closed centres	032031	ISO1E70	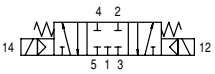
5/3 open centres	032032	ISO1E71	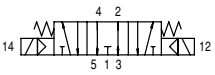
5/3 pressurized centres	032043	ISO1E72	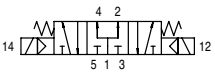
5/3 closed centres with external air pilot	032049	ISO1K70	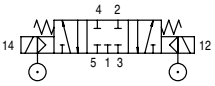
5/3 open centres with external air pilot	032053	ISO1K71	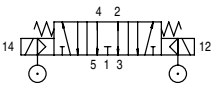
5/3 pressurized centres with external air pilot	032054	ISO1K72	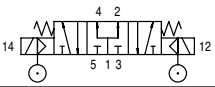

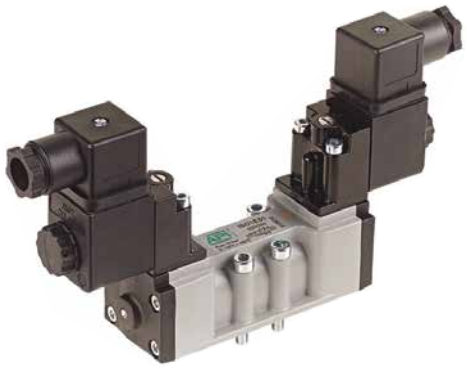

Technical data

Version	5/3 closed centres	5/3 open centres	5/3 pressurized centres	5/3 closed centres with external air pilot	5/3 open centres with external air pilot	5/3 pressurized centres with external air pilot
Code	032031	032032	032043	032049	032053	032054
Item	ISO1E70	ISO1E71	ISO1E72	ISO1K70	ISO1K71	ISO1K72
Size	ISO1					
Fluid	Compressed air with or without lubrication. Lubrication, if started, must be continued.					
Pilot	CNOMO					
Piloting	Internal			With external air pilot		
Pressure range	2,5 ÷ 10 bar			0 ÷ 10 bar		
Minimum external air pressure	-			2,5 bar		
Temperature range	-10°C ÷ +60°C					
Plunger Ø	9 mm					
Orifice Ø	8,5 mm					
Flow at 6 bar with ΔP 1 bar	1.100 Nl/min.					
Mounting	In every position					
Manual override	Bistable					

Notes

Coils and connectors for standard versions to be ordered separately.
For coils type ASA12 and ASA2 see from page 2.315.1. For connectors type A122 e A182 see from page 2.318.1

For valves complete with ATEX coil and connector, in different classifications, see page 2.320.1

Standard dimensions

Type: **5/3 C.C.**
5/3 O.C.
5/3 P.C.

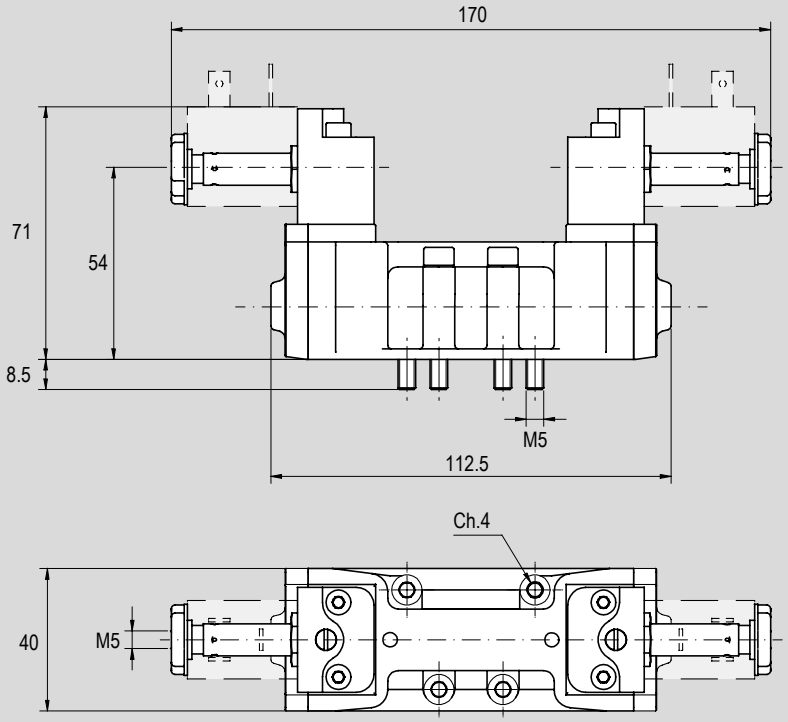

Version	Symbol	Code	Item
ISO1 CNOMO pilot 5/3 closed centres	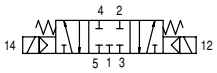	032031	ISO1E70
ISO1 CNOMO pilot 5/3 open centres	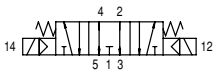	032032	ISO1E71
ISO1 CNOMO pilot 5/3 pressurized centres	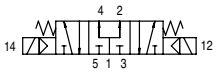	032043	ISO1E72
ISO1 CNOMO pilot 5/3 closed centres with external air pilot	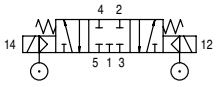	032049	ISO1K70
ISO1 CNOMO pilot 5/3 open centres with external air pilot	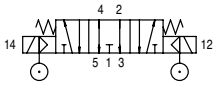	032053	ISO1K71
ISO1 CNOMO pilot 5/3 pressurized centres with external air pilot	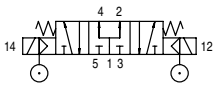	032054	ISO1K72

Valves ISO 5599/1 solenoid operated

ISO1, IN LINE pilot, 5/2 solenoid/spring

Main features

Version	Code	Item	Symbol
5/2 solenoid/spring	032060	ISO1EL50	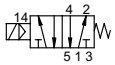
5/2 solenoid/spring with external air pilot	032063	ISO1KL50	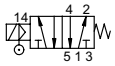



Technical data

Version	5/2 solenoid/spring	5/2 solenoid/spring with external air pilot
Code	032060	032063
Item	ISO1EL50	ISO1KL50
Size	ISO1	
Fluid	Compressed air with or without lubrication. Lubrication, if started, must be continued.	
Pilot	In Line	
Piloting	Internal	With external air pilot
Pressure range	2,5 ÷ 10 bar	0 ÷ 10 bar
Minimum external air pressure	-	2,5 bar
Temperature range	-10°C ÷ +60°C	
Plunger Ø	9 mm	
Orifice Ø	8,5 mm	
Flow at 6 bar with ΔP 1 bar	1.100 Nl/min.	
Mounting	In every position	
Manual override	Bistable	

Notes

Coils and connectors for standard versions to be ordered separately.
For coils type ASA12 and ASA2 see from page 2.315.1. For connectors type A122 e A182 see from page 2.318.1

For valves complete with ATEX coil and connector, in different classifications, see page 2.320.1

Standard dimensions

Type: **5/2 solenoid/spring**

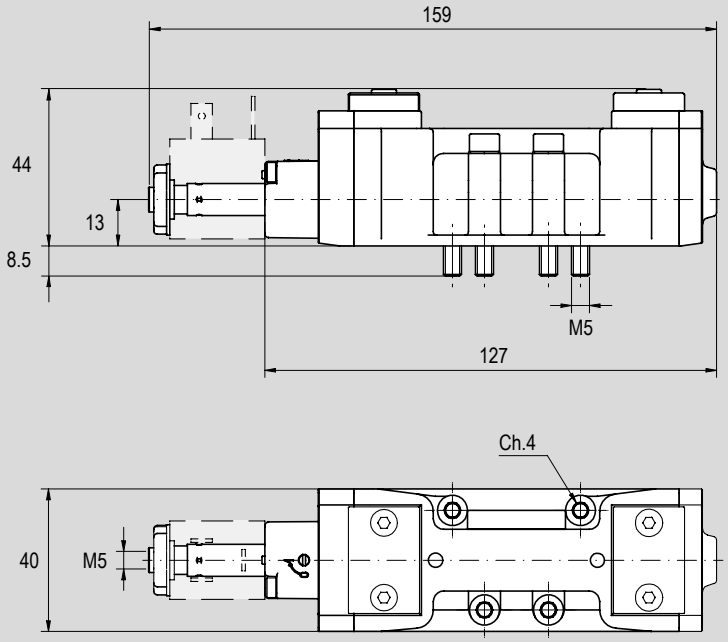

Version	Symbol	Code	Item
ISO1 In Line pilot 5/2 solenoid/spring	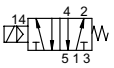	032060	ISO1EL50
ISO1 In Line pilot 5/2 solenoid/spring with external air pilot	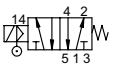	032063	ISO1KL50

Valves ISO 5599/1 solenoid operated

ISO1, IN LINE pilot, 5/2 solenoid/solenoid

Main features

Version	Code	Item	Symbol
5/2 solenoid/solenoid	032070	ISO1EL51	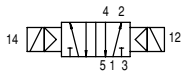
5/2 solenoid/solenoid differential	032061	ISO1EL52	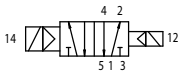
5/2 solenoid/solenoid with external air pilot	032064	ISO1KL51	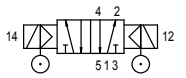
5/2 solenoid/solenoid differential with external air pilot	032065	ISO1KL52	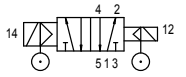



Technical data

Version	5/2 solenoid/solenoid	5/2 solenoid/solenoid differential	5/2 solenoid/solenoid with external air pilot	5/2 solenoid/solenoid differential with external air pilot
Code	032070	032061	032064	032065
Item	ISO1EL51	ISO1EL52	ISO1KL51	ISO1KL52
Size	ISO1			
Fluid	Compressed air with or without lubrication. Lubrication, if started, must be continued.			
Pilot	In Line			
Piloting	Internal		With external air pilot	
Pressure range	1 ÷ 10 bar		0 ÷ 10 bar	
Minimum external air pressure	-		1 bar	
Temperature range	-10°C ÷ +60°C			
Plunger Ø	9 mm			
Orifice Ø	8,5 mm			
Flow at 6 bar with ΔP 1 bar	1.100 Nl/min.			
Mounting	In every position			
Manual override	Bistable			

Notes

Coils and connectors for standard versions to be ordered separately.
For coils type ASA12 and ASA2 see from page 2.315.1. For connectors type A122 e A182 see from page 2.318.1

For valves complete with ATEX coil and connector, in different classifications, see page 2.320.1

Standard dimensions

Type: **5/2 solenoid/solenoid**

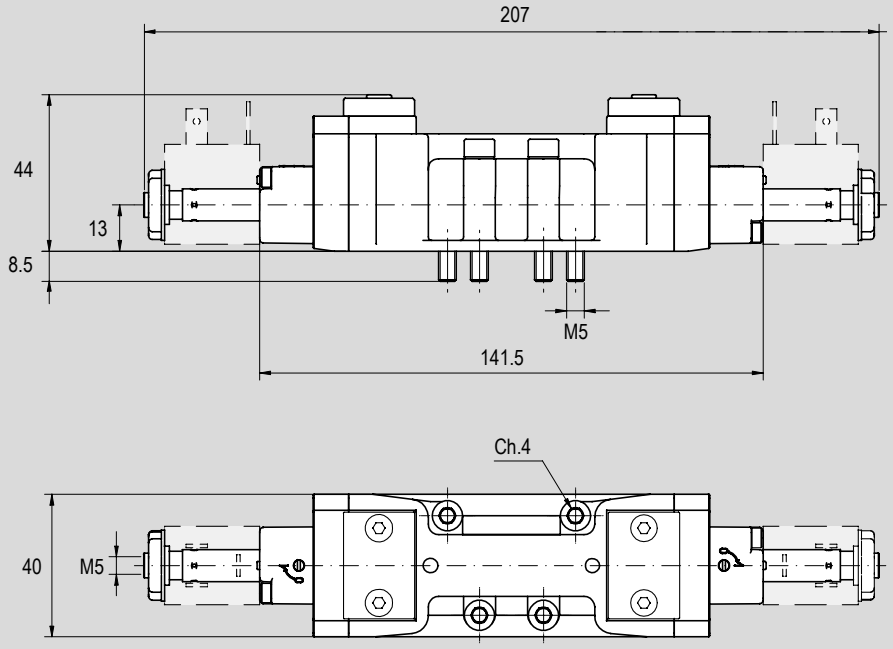

Version	Symbol	Code	Item
ISO1 In Line pilot 5/2 Solenoid/solenoid	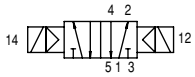	032070	ISO1EL51
ISO1 In Line pilot 5/2 Solenoid/solenoid differential	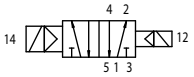	032061	ISO1EL52
ISO1 In Line pilot 5/2 Solenoid/solenoid with external air pilot	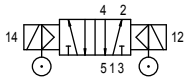	032064	ISO1KL51
ISO1 In Line pilot 5/2 Solenoid/solenoid differential with external air pilot	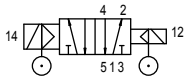	032065	ISO1KL52

Valves ISO 5599/1 solenoid operated

ISO1, IN LINE pilot, 5/3

Main features

Version	Code	Item	Symbol
5/3 closed centres	032071	ISO1EL70	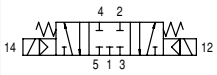
5/3 open centres	032072	ISO1EL71	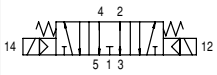
5/3 pressurized centres	032066	ISO1EL72	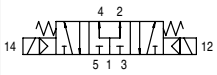
5/3 closed centres with external air pilot	032067	ISO1KL70	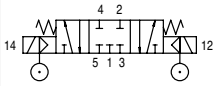
5/3 open centres with external air pilot	032068	ISO1KL71	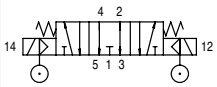
5/3 pressurized centres with external air pilot	032069	ISO1KL72	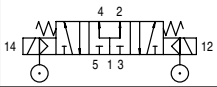



Technical data

Version	5/3 closed centres	5/3 open centres	5/3 pressurized centres	5/3 closed centres with external air pilot	5/3 open centres with external air pilot	5/3 pressurized centres with external air pilot
Code	032071	032072	032066	032067	032068	032069
Item	ISO1EL70	ISO1EL71	ISO1EL72	ISO1KL70	ISO1KL71	ISO1KL72
Size	ISO1					
Fluid	Compressed air with or without lubrication. Lubrication, if started, must be continued.					
Pilot	In Line					
Piloting	Internal			With external air pilot		
Pressure range	2,5 ÷ 10 bar			0 ÷ 10 bar		
Minimum external air pressure	-			2,5 bar		
Temperature range	-10°C ÷ +60°C					
Plunger Ø	9 mm					
Orifice Ø	8,5 mm					
Flow at 6 bar with ΔP 1 bar	1.100 Nl/min.					
Mounting	In every position					
Manual override	Bistable					

Notes

Coils and connectors for standard versions to be ordered separately.
For coils type ASA12 and ASA2 see from page 2.315.1. For connectors type A122 e A182 see from page 2.318.1

For valves complete with ATEX coil and connector, in different classifications, see page 2.320.1

Standard dimensions

Type: **5/3 C.C.**
5/3 O.C.
5/3 P.C.

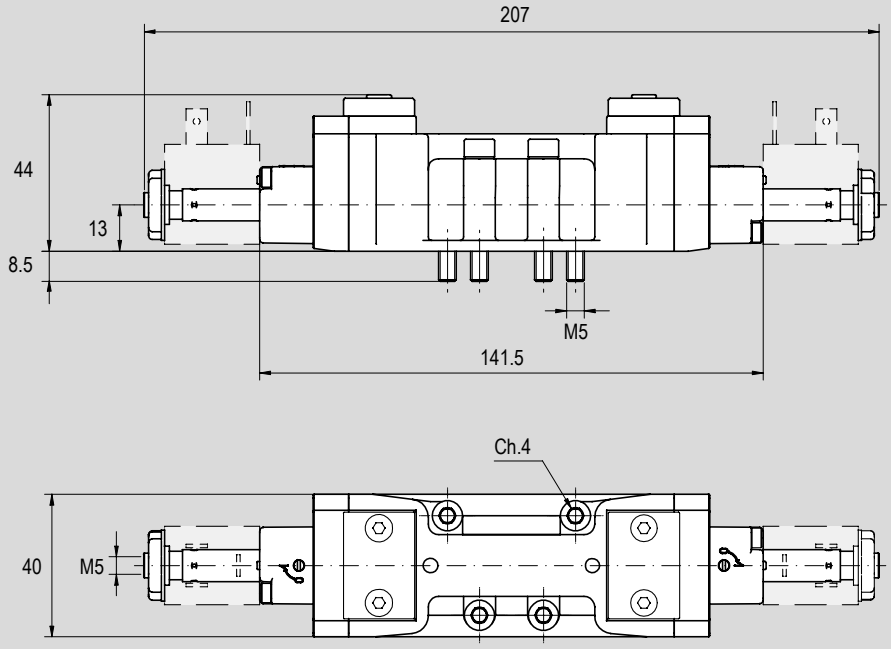

Version	Symbol	Code	Item
ISO1 In Line pilot 5/3 closed centres	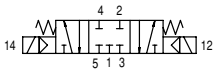	032071	ISO1EL70
ISO1 In Line pilot 5/3 open centres	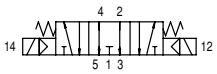	032072	ISO1EL71
ISO1 In Line pilot 5/3 pressurized centres	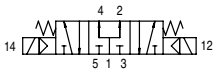	032066	ISO1EL72
ISO1 In Line pilot 5/3 closed centres with external air pilot	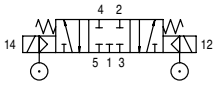	032067	ISO1KL70
ISO1 In Line pilot 5/3 open centres with external air pilot	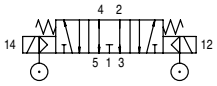	032068	ISO1KL71
ISO1 In Line pilot 5/3 pressurized centres with external air pilot	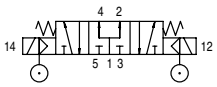	032069	ISO1KL72

Valves ISO 5599/1 solenoid operated

ISO2, CNOMO pilot, 5/2 solenoid/spring

Main features

Version	Code	Item	Symbol
5/2 solenoid/spring	032040	ISO2E50	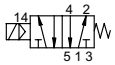
5/2 solenoid/spring with external air pilot	032039	ISO2K50	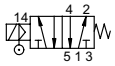

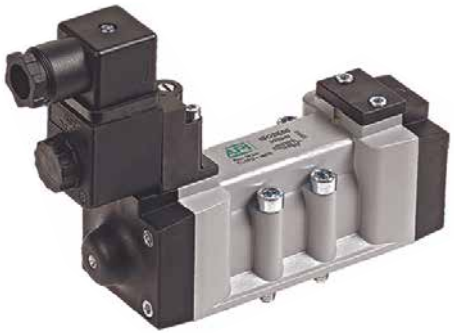

Technical data

Version	5/2 solenoid/spring	5/2 solenoid/spring with external air pilot
Code	032040	032039
Item	ISO2E50	ISO2K50
Size	ISO2	
Fluid	Compressed air with or without lubrication. Lubrication, if started, must be continued.	
Pilot	CNOMO	
Piloting	Internal	With external air pilot
Pressure range	2,5 ÷ 10 bar	0 ÷ 10 bar
Minimum external air pressure	-	2,5 bar
Temperature range	-10°C ÷ +60°C	
Plunger Ø	9 mm	
Orifice Ø	15 mm	
Flow at 6 bar with ΔP 1 bar	2.900 Nl/min.	
Mounting	In every position	
Manual override	Bistable	

Notes

Coils and connectors for standard versions to be ordered separately.
For coils type ASA12 and ASA2 see from page 2.315.1. For connectors type A122 e A182 see from page 2.318.1

For valves complete with ATEX coil and connector, in different classifications, see page 2.320.1

Standard dimensions

Type: **5/2 solenoid/spring**

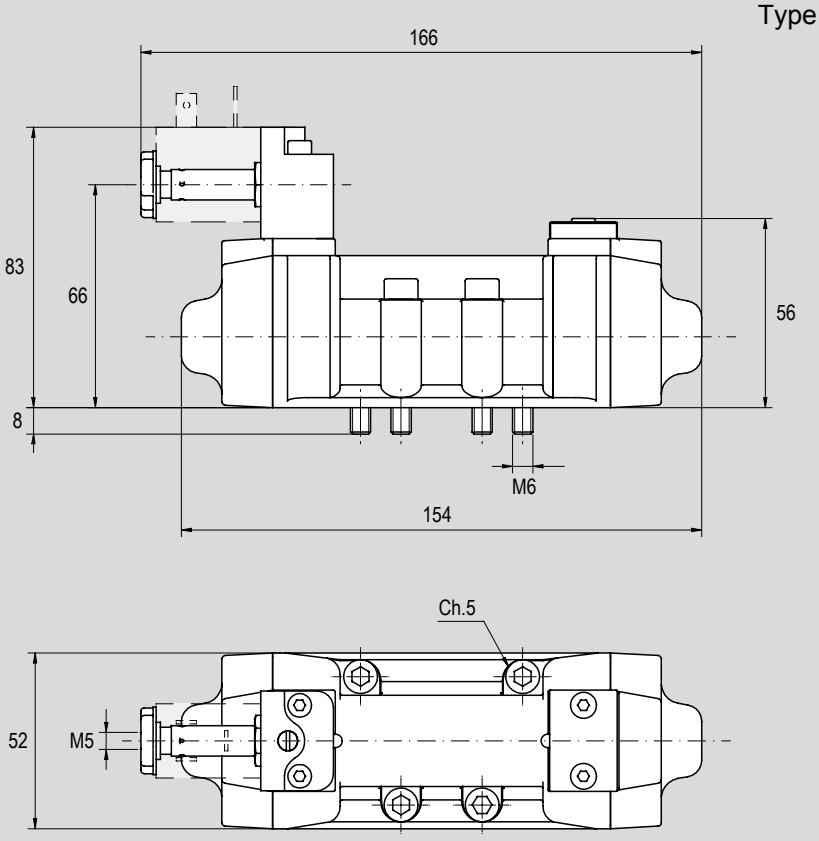

Version	Symbol	Code	Item
ISO2 CNOMO pilot 5/2 solenoid/spring	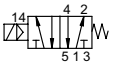	032040	ISO2E50
ISO2 CNOMO pilot 5/2 solenoid/spring with external air pilot	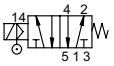	032039	ISO2K50

Valves ISO 5599/1 solenoid operated

ISO2, CNOMO pilot, 5/2 solenoid/solenoid

Main features

Version	Code	Item	Symbol
5/2 solenoid/solenoid	032050	ISO2E51	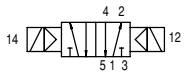
5/2 solenoid/solenoid differential	032042	ISO2E52	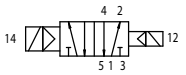
5/2 solenoid/solenoid with external air pilot	032056	ISO2K51	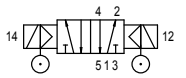
5/2 solenoid/solenoid differential with external air pilot	032057	ISO2K52	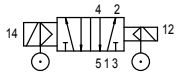

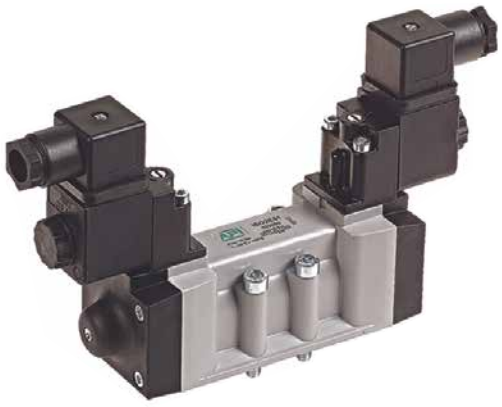

Technical data

Version	5/2 solenoid/solenoid	5/2 solenoid/solenoid differential	5/2 solenoid/solenoid with external air pilot	5/2 solenoid/solenoid differential with external air pilot
Code	032050	032042	032056	032057
Item	ISO2E51	ISO2E52	ISO2K51	ISO2K52
Size	ISO2			
Fluid	Compressed air with or without lubrication. Lubrication, if started, must be continued.			
Pilot	CNOMO			
Piloting	Internal		With external air pilot	
Pressure range	1 ÷ 10 bar		0 ÷ 10 bar	
Minimum external air pressure	-		1 bar	
Temperature range	-10°C ÷ +60°C			
Plunger Ø	9 mm			
Orifice Ø	15 mm			
Flow at 6 bar with ΔP 1 bar	2.900 Nl/min.			
Mounting	In every position			
Manual override	Bistable			

Notes

Coils and connectors for standard versions to be ordered separately.
For coils type ASA12 and ASA2 see from page 2.315.1. For connectors type A122 e A182 see from page 2.318.1

For valves complete with ATEX coil and connector, in different classifications, see page 2.320.1

Standard dimensions

Type: **5/2 solenoid/solenoid**

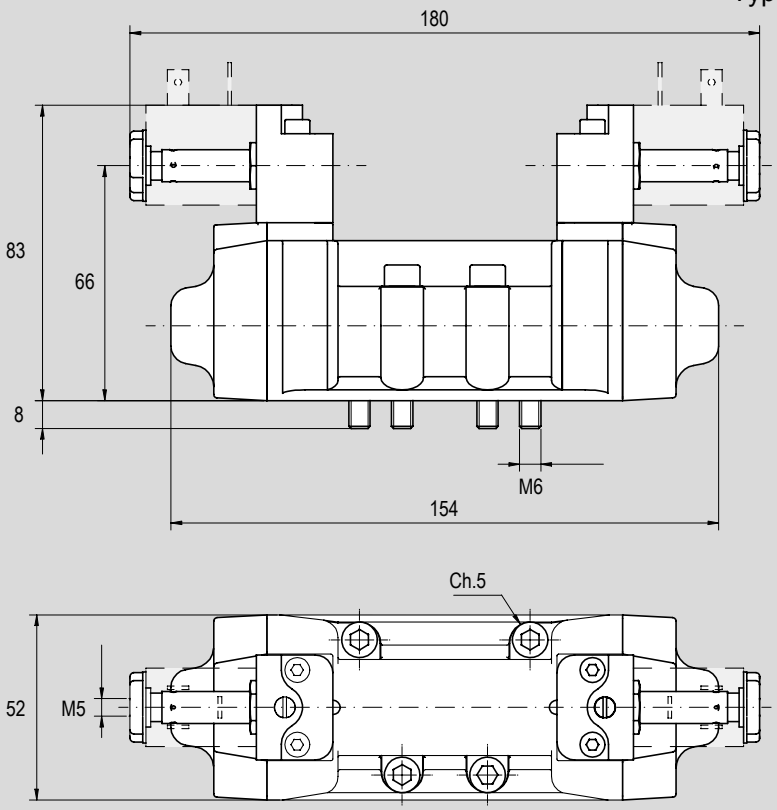

Version	Symbol	Code	Item
ISO2 CNOMO pilot 5/2 solenoid/solenoid	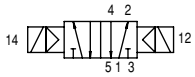	032050	ISO2E51
ISO2 CNOMO pilot 5/2 solenoid/solenoid differential	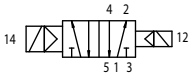	032042	ISO2E52
ISO2 CNOMO pilot 5/2 solenoid/solenoid with external air pilot	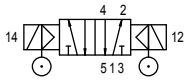	032056	ISO2K51
ISO2 CNOMO pilot 5/2 solenoid/solenoid differential with external air pilot	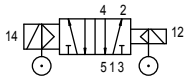	032057	ISO2K52

Valves ISO 5599/1 solenoid operated

ISO2, CNOMO pilot, 5/3

Main features

Version	Code	Item	Symbol
5/3 closed centres	032051	ISO2E70	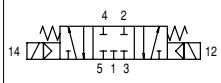
5/3 open centres	032052	ISO2E71	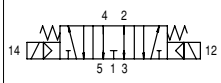
5/3 pressurized centres	032055	ISO2E72	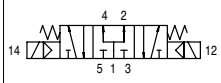
5/3 closed centres with external air pilot	032058	ISO2K70	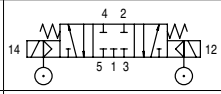
5/3 open centres with external air pilot	032059	ISO2K71	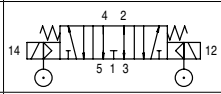
5/3 pressurized centres with external air pilot	032062	ISO2K72	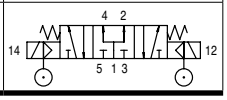

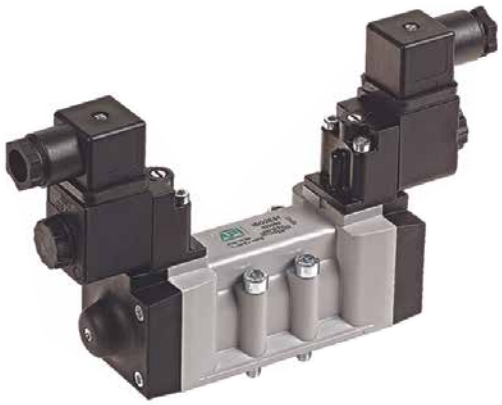

Technical data

Version	5/3 closed centres	5/3 open centres	5/3 pressurized centres	5/3 closed centres with external air pilot	5/3 open centres with external air pilot	5/3 pressurized centres with external air pilot
Code	032051	032052	032055	032058	032059	032062
Item	ISO2E70	ISO2E71	ISO2E72	ISO2K70	ISO2K71	ISO2K72
Size	ISO2					
Fluid	Compressed air with or without lubrication. Lubrication, if started, must be continued.					
Pilot	CNOMO					
Piloting	Internal			With external air pilot		
Pressure range	2,5 ÷ 10 bar			0 ÷ 10 bar		
Minimum external air pressure	-			2,5 bar		
Temperature range	-10°C ÷ +60°C					
Plunger Ø	9 mm					
Orifice Ø	15 mm					
Flow at 6 bar with ΔP 1 bar	2.900 Nl/min.					
Mounting	In every position					
Manual override	Bistable					

Notes

Coils and connectors for standard versions to be ordered separately.
For coils type ASA12 and ASA2 see from page 2.315.1. For connectors type A122 e A182 see from page 2.318.1

For valves complete with ATEX coil and connector, in different classifications, see page 2.320.1

Standard dimensions

Type: **5/3 C.C.**
5/3 O.C.
5/3 P.C.

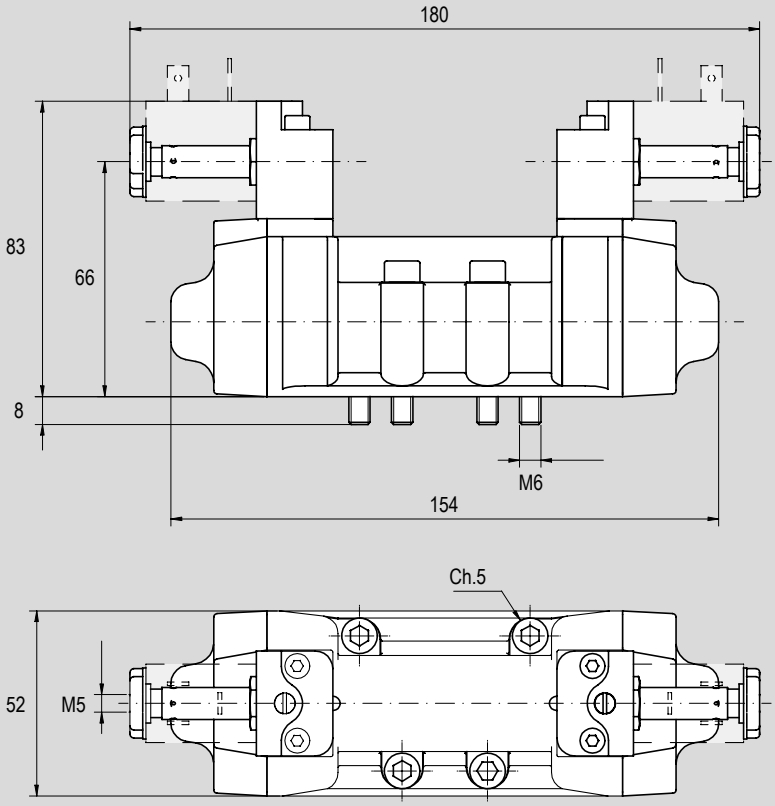

Version	Symbol	Code	Item
ISO2 CNOMO pilot 5/3 closed centres	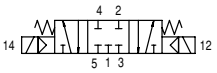	032051	ISO2E70
ISO2 CNOMO pilot 5/3 open centres	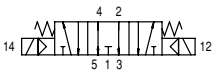	032052	ISO2E71
ISO2 CNOMO pilot 5/3 pressurized centres	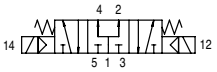	032055	ISO2E72
ISO2 CNOMO pilot 5/3 closed centres with external air pilot	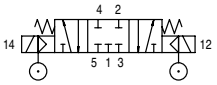	032058	ISO2K70
ISO2 CNOMO pilot 5/3 open centres with external air pilot	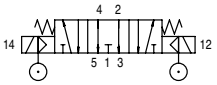	032059	ISO2K71
ISO2 CNOMO pilot 5/3 pressurized centres with external air pilot	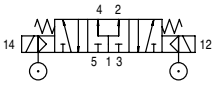	032062	ISO2K72

Single sub-bases SBA1S



Code	Item	Matching
032190	SBA1S	ISO1

Single sub-bases SBA2S



Code	Item	Matching
032200	SBA2S	ISO2

Manifold sub-bases SBA1M



Code	Item	Matching
032120	SBA1M	ISO1

Manifold sub-bases SBA2M



Code	Item	Matching
032130	SBA2M	ISO2

Blank manifold end plates, SBA..C



Code	Item	Matching
032140	SBA1C	ISO1
032150	SBA2C	ISO2

Ported manifold end plates, SBA..A



Code	Item	Matching
032141	SBA1A	ISO1
032151	SBA2A	ISO2

Manifold blanking plate, SBA..T



Code	Item	Matching
032170	SBA1T	ISO1
032180	SBA2T	ISO2

Interface for sub-bases from size ISO1 to ISO2, SBA1A2



Code	Item	Matching
032160	SBA1A2	ISO1 / ISO2

Coils ASA12..



Voltage	Code	Item	Matching
12V DC	032100	ASA1201200	ISO1 ISO2
12V AC	032101	ASA1201250	
24V DC	032102	ASA1202400	
24V AC	032103	ASA1202450	
48V AC	032104	ASA1204850	
110V AC	032105	ASA1211050	
230V AC	032106	ASA1223050	

Coils ASA2..



Voltage	Code	Item	Matching
12V DC	032109	ASA201200	ISO1 ISO2
12V AC	032110	ASA201250	
24V DC	032111	ASA202400	
24V AC	032112	ASA202450	
48V AC	032113	ASA204850	
110V AC	032114	ASA211050	
230V AC	032115	ASA223050	

Connectors A122..*



Code	Item	Description
032118	A12209N	Black standard
033521	A12209NK	Black standard cabled
032204	A12209T1	LED+VDR transparent 24VAC-DC
032205	A12209T2	LED+VDR transparent 115VAC-DC
032206	A12209T3	LED+VDR transparent 230VAC-DC
033522	A12209N1K	LED+VDR black cabled 24VAC-DC
033523	A12209N2K	LED+VDR black cabled 115VAC-DC
033524	A12209N3K	LED+VDR black cabled 230VAC-DC

* For coils type ASA12

Connectors A182..**



Code	Item	Description
032119	A18209N	Black standard
033531	A18209NK	Black standard cabled
032207	A18209T1	LED+VDR transparent 24VAC-DC
032208	A18209T2	LED+VDR transparent 115VAC-DC
032209	A18209T3	LED+VDR transparent 230VAC-DC
033532	A18209N1K	LED+VDR black cabled 24VAC-DC
033533	A18209N2K	LED+VDR black cabled 115VAC-DC
033534	A18209N3K	LED+VDR black cabled 230VAC-DC

* For coils type ASA2

Notes

VALVES ISO 5599/1

air operated



Find out our
key products

- **Solution for most applications**
- **Easy and intuitive choice**
- **Excellent value for money**
- **Wide availability**
- **Fast delivery**

Features and certifications

Spool valves confoming to ISO 5599/1 standards, with static seals, high flow, for sub-base mounting only.
Available in size ISO1 and ISO2, air operated, 5/2 pilot/spring, 5/2 pilot/pilot and 5/2 pilot/pilot differential, 5/3 closed centres, 5/3 open centres and 5/3 pressurized centres.
Supplied as standard in compliance to Reach and RoHS directives, and SIL certified. On request the valve body can be supplied according to 2014/34/EU ATEX Directive, classification Ex h.

Series ISO1 5/2 Pilot/Spring

from page 2.101.30



Series of spool valves conforming to ISO 5599/1 standard, with static seals, high flow, for sub-base mounting only.
Available in size ISO1, air operated, 5/2 pilot/spring.



Series ISO1 5/2 Pilot/Pilot

from page 2.101.50



Series of spool valves conforming to ISO 5599/1 standard, with static seals, high flow, for sub-base mounting only.
Available in size ISO1, air operated, 5/2 pilot/pilot and 5/2 pilot/pilot differential.

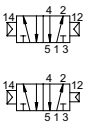

Series ISO1 5/3

from page 2.101.70



Series of spool valves conforming to ISO 5599/1 standard, with static seals, high flow, for sub-base mounting only.
Available in size ISO1, air operated, 5/3 closed centres, 5/3 open centres e 5/3 pressurized centres.

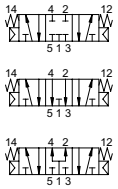

Series ISO2 5/2 Pilot/Spring

from page 2.103.30



Series of spool valves conforming to ISO 5599/1 standard, with static seals, high flow, for sub-base mounting only.
Available in size ISO2, air operated, 5/2 pilot/spring.



Series ISO2 5/2 Pilot/Pilot

from page 2.103.50



Series of spool valves conforming to ISO 5599/1 standard, with static seals, high flow, for sub-base mounting only.
Available in size ISO2, air operated, 5/2 pilot/pilot and 5/2 pilot/pilot differential.





Series ISO2 5/3

from page 2.103.70



Series of spool valves conforming to ISO 5599/1 standard, with static seals, high flow, for sub-base mounting only.
Available in size ISO2, air operated, 5/3 closed centres, 5/3 open centres e 5/3 pressurized centres.

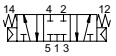

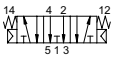

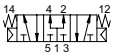

Options

Description	Symbol	Suffix
ATEX valve body*		**/ATEX**
Special versions on request		**/S**

The options, when this is possible, can be combined with each other. For code key see from page 2.100.5

Standard materials

Size: **ISO1**
ISO2

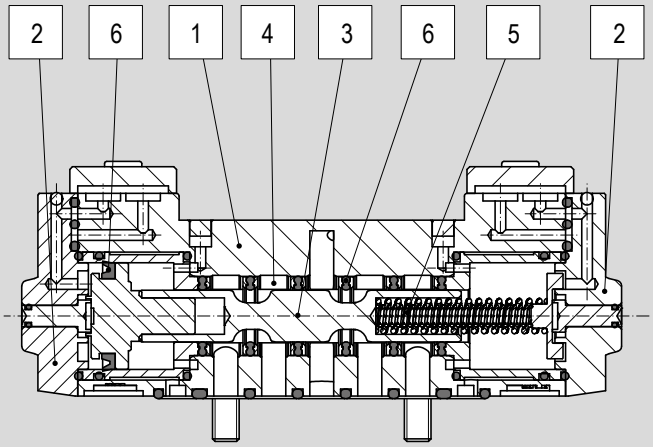

Position	Description	Material	
		ISO1	ISO2
1	Body	Die-cast painted aluminium	
2	Covers	PBT	
3	Spool	Hard anodized aluminium	
4	Distancers	Aluminium	
5	Spring	Spring steel	
6	Seals	HNBR	

Code key

Series	Size	Actuation	Function	/	ATEX valve body
ISO	**1**	**P**	**50**	**/**	

- Series: ISO = ISO
- Size: 1 = ISO1; 2 = ISO2
- Actuation: P = Pneumatic
- Function: 50 = 5/2 Pilot/Spring; 51 = 5/2 Pilot/Pilot; 52 = 5/2 Pilot/Pilot differential; 70 = 5/3 Closed Centres; 71 = 5/3 Open Centres; 72 = 5/3 Pressurized Centres
- ATEX valve body: ATEX — CE Ex — II 2G Ex h IIB T5 Gb; II 2D Ex h IIIC T100°C Db

How to order

Series	Size	Actuation	Function
ISO	**1**	**P**	**50**

Notes

Options in the same grid are alternative to each others.

For standard materials see page 2.100.4.

For further information on the ATEX 2014/34/EU Directive, on classifications and protections, see from page III.1

Accessories

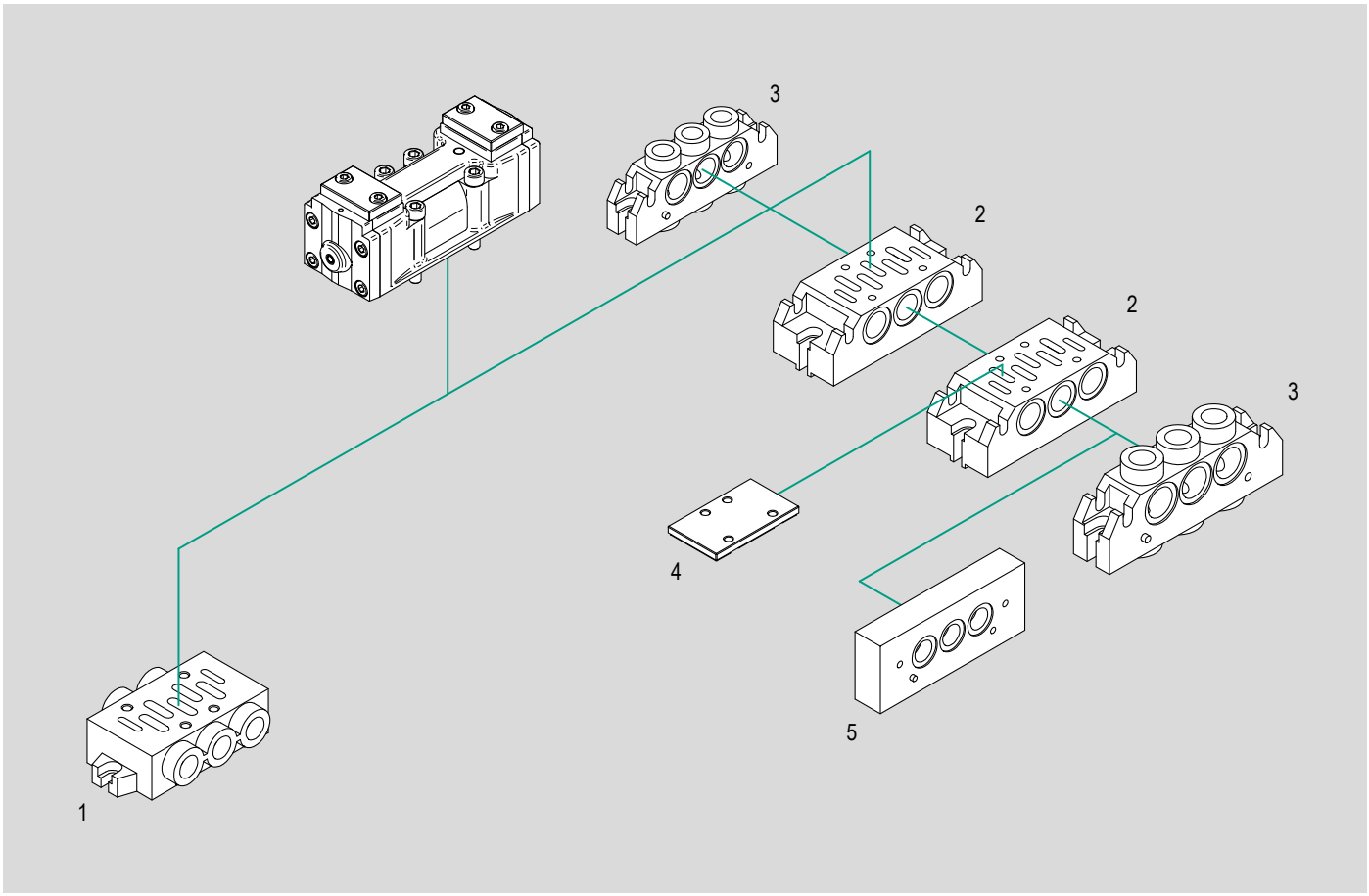

N.	Item	Description	Compliance	Matching		Code key page	Data sheet page
				ISO1	ISO2		
1	SBA1S	Single sub-base	ISO 5599/1	●	-	2.97.1	2.107.10
	SBA2S			-	●		2.107.30
2	SBA1M	Manifold sub-base	ISO 5599/1	●	-		2.107.20
	SBA2M			-	●		2.107.40
3	SBA1A SBA1C	End plates (for manifold)	ISO 5599/1	●	-		2.107.51
	SBA2A SBA2C			-	●		
4	SBA1T	Blanking plate (for manifold)	ISO 5599/1	●	-		2.107.50
	SBA2T			-	●		
5	SBA1A2	Interface ISO1/ISO2 (for manifold)	ISO 5599/1	●	●		

Key
● matching accessory; - not matching accessory

Valves ISO 5599/1 air operated
ISO1, 5/2 pilot/spring

Main features

Version	Code	Item	Symbol
5/2 pilot/spring	032000	ISO1P50	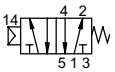



Technical data

Version	5/2 pilot/spring
Code	032000
Item	ISO1P50
Size	ISO1
Fluid	Compressed air with or without lubrication. Lubrication, if started, must be continued.
Pressure range	2,5 ÷ 10 bar
Temperature range	-10°C ÷ +60°C
Orifice Ø	8,5 mm
Flow at 6 bar with ΔP 1 bar	1.100 Nl/min.
Mounting	In every position

Standard dimensions

Type: **5/2 pilot/spring**

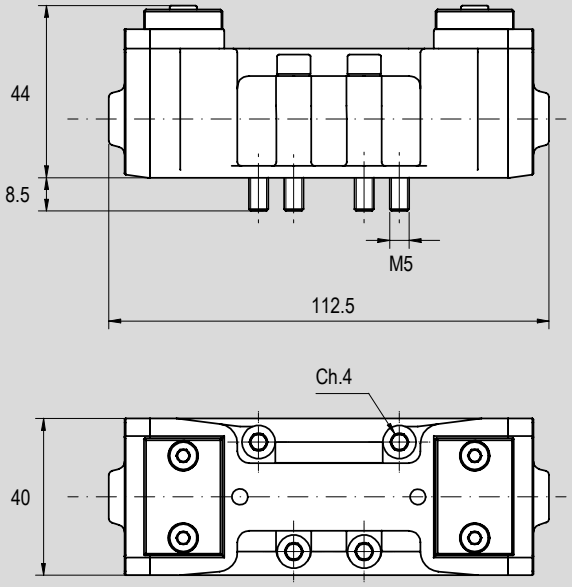

Version	Symbol	Code	Item
ISO1 5/2 pilot/spring	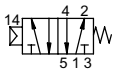	032000	ISO1P50

Main features

Version	Code	Item	Symbol
5/2 pilot/pilot	032001	ISO1P51	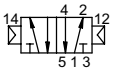
5/2 pilot/pilot differential	032002	ISO1P52	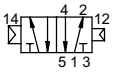



Technical data

Version	5/2 pilot/pilot	5/2 pilot/pilot differential
Code	032001	032002
Item	ISO1P51	ISO1P52
Size	ISO1	
Fluid	Compressed air with or without lubrication. Lubrication, if started, must be continued.	
Pressure range	1 ÷ 10 bar	
Temperature range	-10°C ÷ +60°C	
Orifice Ø	8,5 mm	
Flow at 6 bar with ΔP 1 bar	1.100 Nl/min.	
Mounting	In every position	

Standard dimensions

Type: **5/2 pilot/pilot**

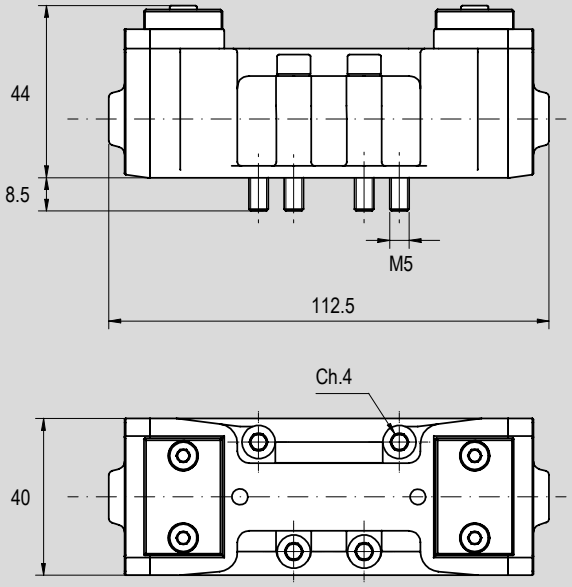

Version	Symbol	Code	Item
ISO1 5/2 pilot/pilot	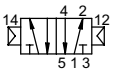	032001	ISO1P51
ISO1 5/2 pilot/pilot differential		032002	ISO1P52

Valves ISO 5599/1 air operated
ISO1, 5/3

Main features

Version	Code	Item	Symbol
5/3 closed centres	032003	ISO1P70	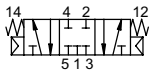
5/3 open centres	032004	ISO1P71	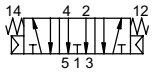
5/3 pressurized centres	032019	ISO1P72	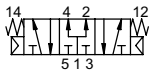



Technical data

Version	5/3 closed centres	5/3 open centres	5/3 pressurized centres
Code	032003	032004	032019
Item	ISO1P70	ISO1P71	ISO1P72
Size	ISO1		
Fluid	Compressed air with or without lubrication. Lubrication, if started, must be continued.		
Pressure range	2,5 ÷ 10 bar		
Temperature range	-10°C ÷ +60°C		
Orifice Ø	8,5 mm		
Flow at 6 bar with ΔP 1 bar	1.100 Nl/min.		
Mounting	In every position		

Standard dimensions

Type: **5/3 C.C.**
5/3 O.C.
5/3 P.C.

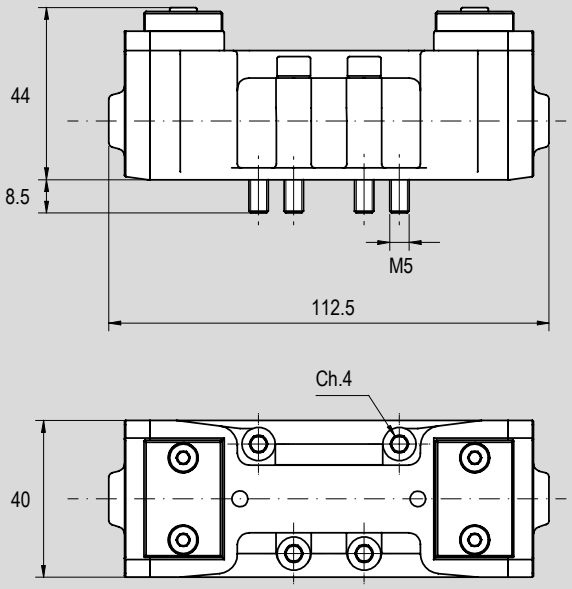

Version	Symbol	Code	Item
ISO1 5/3 closed centres	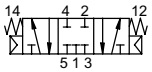	032003	ISO1P70
ISO1 5/3 open centres	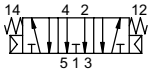	032004	ISO1P71
ISO1 pressurized centres	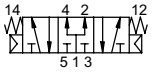	032019	ISO1P72

Main features

Version	Code	Item	Symbol
5/2 pilot/spring	032005	ISO2P50	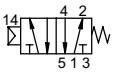



Technical data

Version	5/2 pilot/spring
Code	032005
Item	ISO2P50
Size	ISO2
Fluid	Compressed air with or without lubrication. Lubrication, if started, must be continued.
Pressure range	2,5 ÷ 10 bar
Temperature range	-10°C ÷ +60°C
Orifice Ø	15 mm
Flow at 6 bar with ΔP 1 bar	2.900 Nl/min.
Mounting	In every position

Standard dimensions

Type: **5/2 pilot/spring**

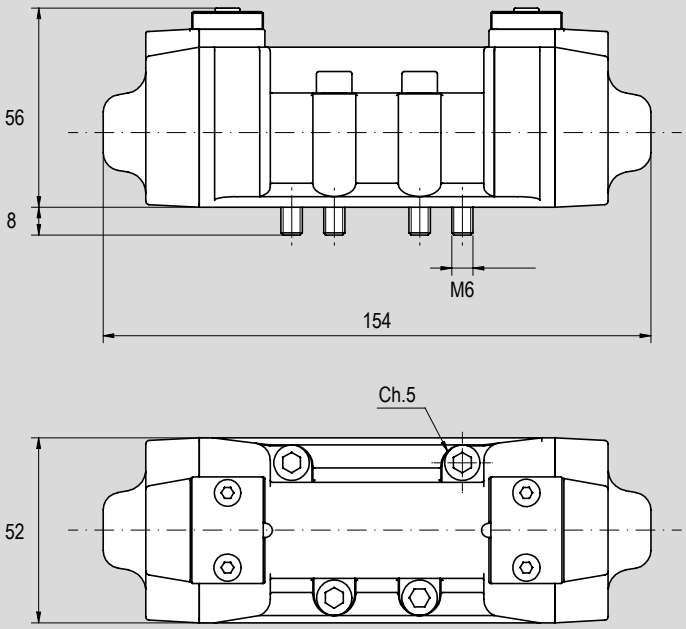

Version	Symbol	Code	Item
ISO2 5/2 pilot/spring	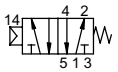	032005	ISO2P50

Valves ISO 5599/1 air operated
ISO2, 5/2 pilot/pilot

Main features

Version	Code	Item	Symbol
5/2 pilot/pilot	032011	ISO2P51	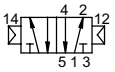
5/2 pilot/pilot differential	032012	ISO2P52	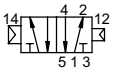



Technical data

Version	5/2 pilot/pilot	5/2 pilot/pilot differential
Code	032011	032012
Item	ISO2P51	ISO2P52
Size	ISO2	
Fluid	Compressed air with or without lubrication. Lubrication, if started, must be continued.	
Pressure range	1 ÷ 10 bar	
Temperature range	-10°C ÷ +60°C	
Orifice Ø	15 mm	
Flow at 6 bar with ΔP 1 bar	2.900 Nl/min.	
Mounting	In every position	

Standard dimensions

Type: **5/2 pilot/pilot**

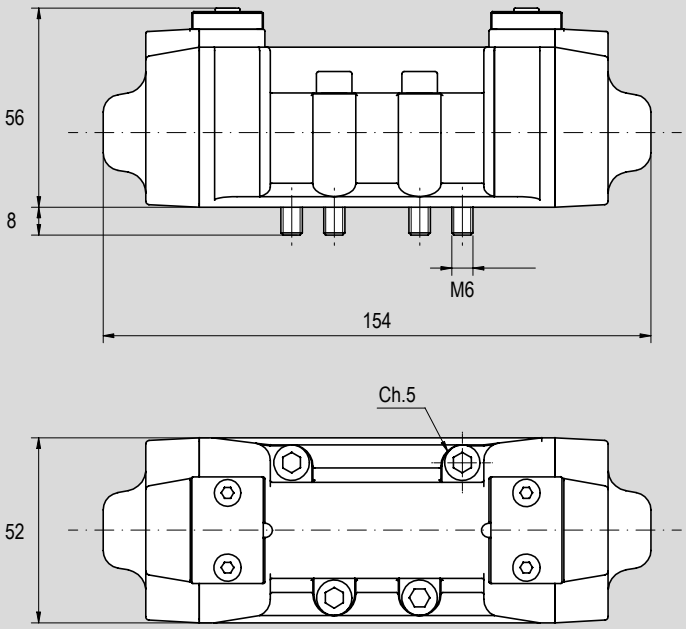

Version	Symbol	Code	Item
ISO2 5/2 pilot/pilot	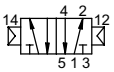	032011	ISO2P51
ISO2 5/2 pilot/pilot differential		032012	ISO2P52

Valves ISO 5599/1 air operated
ISO2, 5/3

Main features

Version	Code	Item	Symbol
5/3 closed centres	032013	ISO2P70	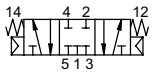
5/3 open centres	032014	ISO2P71	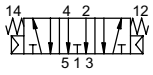
5/3 pressurized centres	032038	ISO2P72	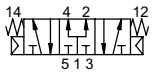



Technical data

Version	5/3 closed centres	5/3 open centres	5/3 pressurized centres
Code	032013	032014	032038
Item	ISO2P70	ISO2P71	ISO2P72
Size	ISO2		
Fluid	Compressed air with or without lubrication. Lubrication, if started, must be continued.		
Pressure range	2,5 ÷ 10 bar		
Temperature range	-10°C ÷ +60°C		
Orifice Ø	15 mm		
Flow at 6 bar with ΔP 1 bar	2.900 Nl/min.		
Mounting	In every position		

Standard dimensions

Type: **5/3 C.C.**
5/3 O.C.
5/3 P.C.

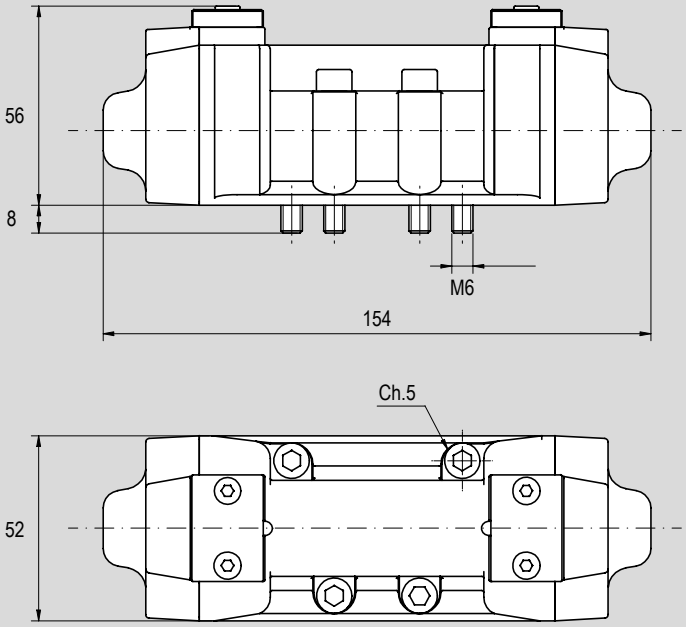

Version	Symbol	Code	Item
ISO2 5/3 closed centres	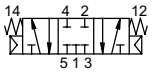	032013	ISO2P70
ISO2 5/3 open centres	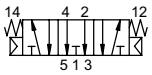	032014	ISO2P71
ISO2 5/3 pressurized centres	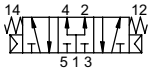	032038	ISO2P72

Single sub-bases SBA1S



Code	Item	Matching
032190	SBA1S	ISO1

Single sub-bases SBA2S



Code	Item	Matching
032200	SBA2S	ISO2

Manifold sub-bases SBA1M



Code	Item	Matching
032120	SBA1M	ISO1

Manifold sub-bases SBA2M



Code	Item	Matching
032130	SBA2M	ISO2

Blank manifold end plates, SBA..C



Code	Item	Matching
032140	SBA1C	ISO1
032150	SBA2C	ISO2

Ported manifold end plates, SBA..A



Code	Item	Matching
032141	SBA1A	ISO1
032151	SBA2A	ISO2

Manifold blanking plate, SBA..T



Code	Item	Matching
032170	SBA1T	ISO1
032180	SBA2T	ISO2

Interface for sub-bases from size ISO1 to ISO2, SBA1A2



Code	Item	Matching
032160	SBA1A2	ISO1 / ISO2

Notes

SUB-BASES
for valves ISO 5599/1



Find out our
key products

- **Solution for most applications**
- **Easy and intuitive choice**
- **Excellent value for money**
- **Wide availability**
- **Fast delivery**

Features and certifications

Single sub-bases and manifold for valves conforming to ISO 5599/1 standards. Available for sizes ISO1 and ISO2, solenoid operate or air operated, functions 5/2 (pilot/spring or pilot/pilot) and 5/3. The manifold kit include mounting screws and seals.
Supplied as standard in compliance to Reach and RoHS directives, and SIL certified.

Series SBA1S

from page 2.107.10



Single sub-bases for valves series ISO 5599/1 size 1, solenoid or air operated.

Series SBA1M..

from page 2.107.20



Manifold sub-bases for valves series ISO 5599/1 size 1, solenoid or air operated.

Series SBA2S

from page 2.107.30



Single sub-bases for valves series ISO 5599/1 size 2, solenoid or air operated.

Series SBA2M..

from page 2.107.40



Manifold sub-bases for valves series ISO 5599/1 size 2, solenoid or air operated.

Code key for sub-bases

Series	Size	Type
SBA	**2**	**M**
SBA	1 = ISO1	S = Single
	2 = ISO2	M = Manifold

How to order

Series	Size	Type
SBA	**2**	**M**

Notes

Options in the same grid are alternative to each others.

Code key for sub-bases accessories

Series	Size*	Type
SBA	**2**	**A**
SBA	1 = ISO1	A = Ported manifold end plate
	2 = ISO2	C = Blank manifold end plate
		T = Manifold blanking plate
		A2 = Intergace ISO1/ISO2

How to order

Series	Size	Type
SBA	**2**	**A**

Notes

Options in the same grid are alternative to each others.

* For interface ISO1/ISO2 indicate size ISO1 only.

Accessories

Type: **SBA1M..**
SBA2M..

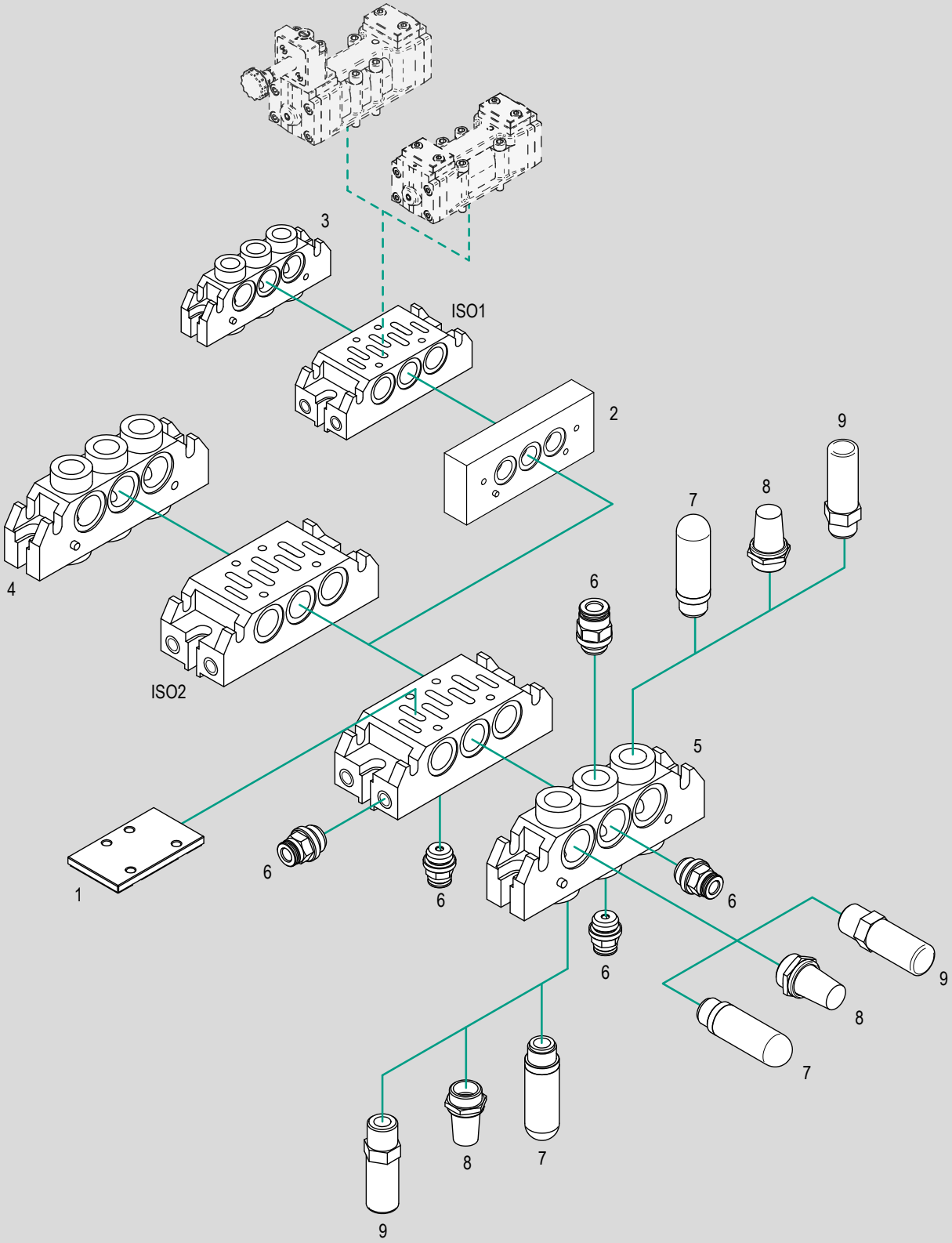

Type: **SBA1S**
SBA2S

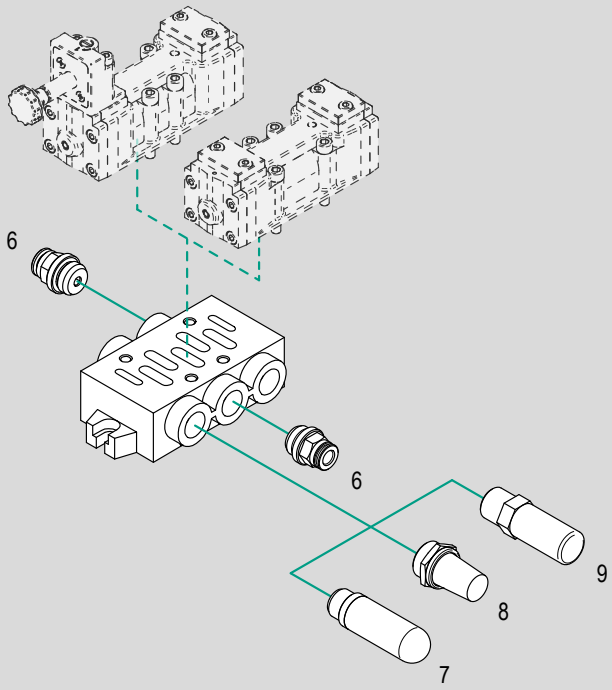

N.	Item	Description	Compliance	Matching				Code key and data sheet page
				SBA1S	SBA2S	SBA1M	SBA2M	
1	SBA1T	Manifold blanking plate for ISO1 sub bases	ISO 5599/1	-	-	●	-	2.107.50
	SBA2T	Manifold blanking plate for ISO2 sub bases	ISO 5599/1	-	-	-	●	
2	SBA1A2	Interface from size ISO1 to ISO2	ISO 5599/1	-	-	●	●	
3	SBA1C	Blank manifold end plate for ISO1 sub bases	ISO 5599/1	-	-	●	-	2.107.51
4	SBA2C	Blank manifold end plate for ISO2 sub bases	ISO 5599/1	-	-	-	●	
5	SBA1A	Ported manifold end plate for ISO1 sub bases	ISO 5599/1	-	-	●	-	
	SBA2A	Ported manifold end plate for ISO2 sub bases	ISO 5599/1	-	-	-	●	
6	R..	Push-in fittings	UNI ISO 228/1 UNI ISO7/1 ISO R/232	●	●	●	●	4.2.1
7	AS..	Plastic silencers	-	●	●	●	●	4.151.10
	SP..			●	●	●	●	4.151.20
8	A..	Sintered silencers	-	●	●	●	●	4.153.10
9	M..	Metal silencers	-	●	●	●	●	4.155.10

Key
● matching accessory; - not matching accessory

Sub-bases for valves series ISO 5599/1

Series SBA1S, ISO1

Main features

Version	Code	Item
Single sub-base	032190	SBA1S



Technical data

Version	Single base
Code	032190
Item	SBA1S
Size	1
Function	Single
Positions	1
Ports	G1/4"
Matching valves	Series ISO 5599/1

Standard materials

Description	Material
Body	Die-cast aluminium

Standard dimensions

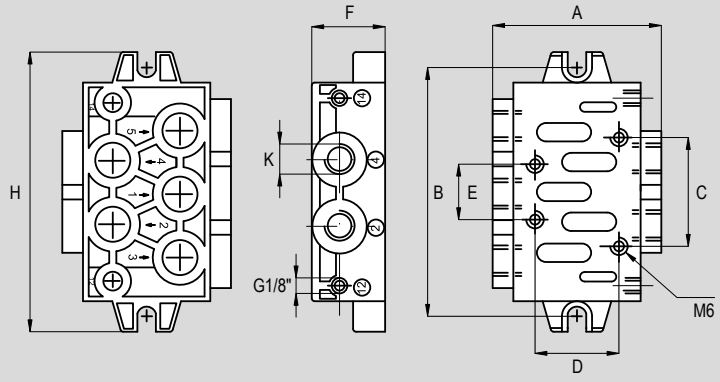

Item	Code	Positions	A	B	C	D	E	F	K	H
SBA1S	032190	1	56	82,5	36	28	18	24	1/4"	92,5

Sub-bases for valves series ISO 5599/1

Series SBA1M, ISO1

Main features

Version	Code	Item
Manifold sub-base	032120	SBA1M



Technical data

Version	Manifold sub-base
Code	032120
Item	SBA1M
Size	1
Function	Modular
Positions	1
Ports	G1/4"
Matching valves	Series ISO 5599/1

Standard materials

Description	Material
Body	Die-cast aluminium
Seals*	NBR
Screws*	Zinc-plated steel

* The kit include 2 screws and 3 seals

Standard dimensions

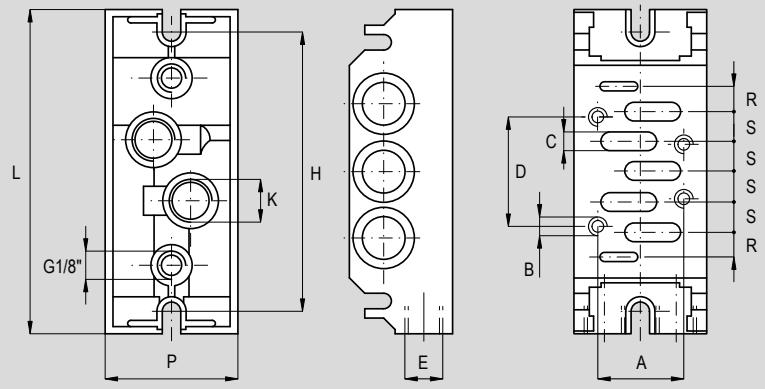

Item	Code	Positions	A	B	C	D	R	S	E	H	P	K	L
SBA1M	032120	1	28	M5	4,5	36	8,5	9	1/4"	92	43	1/4"	106

Sub-bases for valves series ISO 5599/1

Series SBA2S, ISO2

Main features

Version	Code	Item
Single sub-base	032200	SBA2S



Technical data

Version	Single base
Code	032200
Item	SBA2S
Size	2
Function	Single
Positions	1
Ports	G3/8"
Matching valves	Series ISO 5599/1

Standard materials

Description	Material
Body	Die-cast aluminium

Standard dimensions

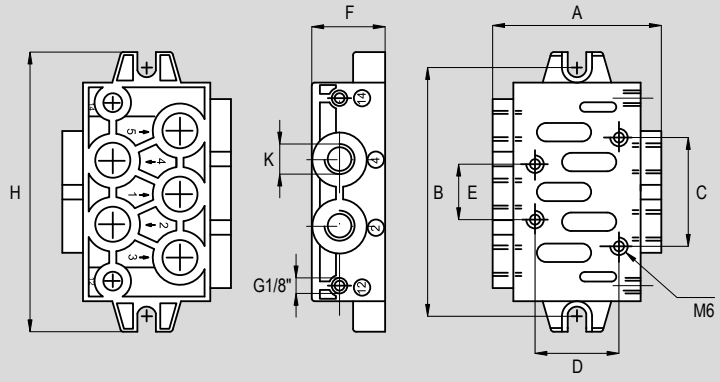

Item	Code	Positions	A	B	C	D	E	F	K	H
SBA2S	032200	1	65	100,5	48	38	24	30	3/8"	112,5

Sub-bases for valves series ISO 5599/1

Series SBA2M, ISO2

Main features

Version	Code	Item
Manifold sub-base	032130	SBA2M



Technical data

Version	Single base
Code	032130
Item	SBA2M
Size	2
Function	Modular
Positions	1
Ports	G3/8"
Matching valves	Series ISO 5599/1

Standard materials

Description	Material
Body	Die-cast aluminium
Seals*	NBR
Screws*	Zinc-plated steel

* The kit include 2 screws and 3 seals

Standard dimensions

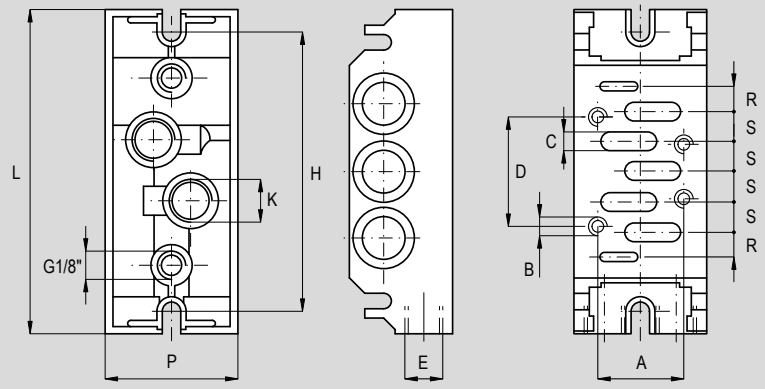

Item	Code	Positions	A	B	C	D	R	S	E	H	P	K	L
SBA2M	032130	1	38	M6	7	48	10	12	3/8"	102	56	3/8"	120

Sub-bases for valves series ISO 5599/1

Accessories for sub-bases

Main features

Version	Code	Item
Manifold blanking plate for unused positions SBA1M	032170	SBA1T
Manifold blanking plate for unused positions SBA2M	032180	SBA2T



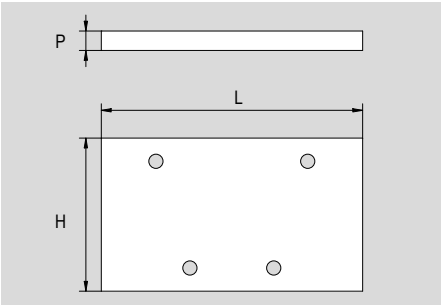

Technical data

Version		Manifold blanking plate for unused positions SBA..T	
Code		032170	032180
Item		SBA1T	SBA2T
Size		ISO1	ISO2
Material	Body	Aluminium	
	Seals*	NBR	
	Screws*	Zinc-plated steel	
Matching		Manifold sub-base series SBA1M	Manifold sub-base series SBA2M

* The kit include 4 screws and 1 seal

Dimensions

Item	Code	Size	L	H	P
SBA1T	032170	ISO1	68	40	6
SBA2T	032180	ISO2	80	54	6

Main features

Version	Code	Item
Interfaccia ISO1-ISO2 per sub-bases modulari SBA..M	032160	SBA1A2



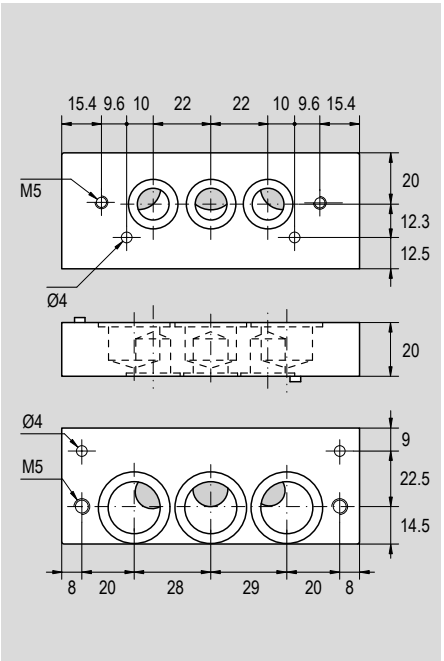

Technical data

Version		Interface from size ISO1 to ISO2 for manifold sub-bases SBA..M
Code		032160
Item		SBA1A2
Size		ISO1-ISO2
Material	Body	Aluminium
	Seals*	NBR
	Screws*	Zinc-plated steel
Matching		Manifold sub-base series SBA1M-SBA2M

* The kit include 4 screws and 6 seals

Sub-bases for valves series ISO 5599/1

Accessories for sub-bases

Main features

Version	Code	Item
Blank manifold end plates SBA1M	032140	SBA1C
Blank manifold end plates SBA2M	032150	SBA2C
Ported manifold end plates SBA1M	032141	SBA1A
Ported manifold end plates SBA2M	032151	SBA2A





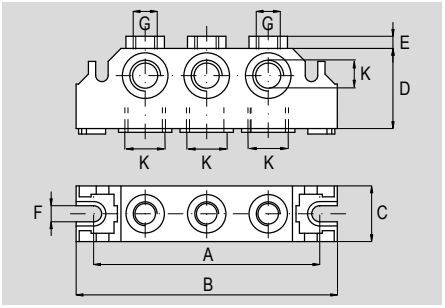

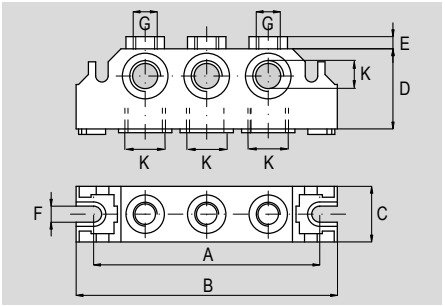

Technical data

Version		Manifold end plates SBA..M			
Code		032140	032150	032141	032151
Item		SBA1C	SBA2C	SBA1A	SBA2A
Size		ISO1	ISO2	ISO1	ISO2
Material	Body	Aluminium			
	Seals*	NBR			
	Screws*	Zinc-plated steel			
Function		Blank manifold end plates		Ported manifold end plates	
Matching		Manifold sub-base SBA1M	Manifold sub-base SBA2M	Manifold sub-base SBA1M	Manifold sub-base SBA2M

* The kit include 2 screws and 3 seals

Dimensions

Item	Code	Size	A	B	C	D	E	F	G	K
SBA1C	032140	ISO1	92	106	22	36	8	5,5	1/4”	3/8”
SBA2C	032150	ISO2	102	120	29	43	7	6,5	1/4”	1/2"
SBA1A	032141	ISO1	92	106	22	36	8	5,5	1/4”	3/8”
SBA2A	032151	ISO2	102	120	29	43	7	6,5	1/4”	1/2"

Notes

INDIRECTLY OPERATED

solenoid valves for water and steam



Find out our
key products

- **Solution for most applications**
- **Easy and intuitive choice**
- **Excellent value for money**
- **Wide availability**
- **Fast delivery**

Features and certifications

Indirectly operated solenoid valves for fluids and compressed air, servo-assisted with diaphragm. Available in sizes from 1/4" to 2", 2/2 normally closed or normally open, in three seals versions.
Coils and connectors to be ordered separately.
Supplied as standard in compliance to Reach and RoHS directives.

Series AEN 2/2

from page 2.120.10



Series of indirectly operated solenoid valves for fluids and compressed air, servo-assisted with diaphragm, NBR seals, for operating temperatures from -10°C up to +90°C.
Availables in sizes from 1/4" to 2", 2/2 normally closed or normally open.
Coils and connectors to be ordered separately.

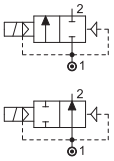

Series AEV 2/2

from page 2.120.10



Series of indirectly operated solenoid valves for fluids and compressed air, servo-assisted with diaphragm, FKM seals, for operating temperatures from -10°C up to +140°C.
Availables in sizes from 1/4" to 2", 2/2 normally closed or normally open.
Coils and connectors to be ordered separately.

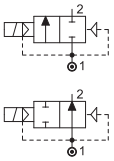

Series AEP 2/2

from page 2.120.10



Series of indirectly operated solenoid valves for fluids and compressed air, servo-assisted with diaphragm, EPDM seals, for operating temperatures up to +140°C.
Availables in sizes from 1/4" to 2", 2/2 normally closed or normally open.
Coils and connectors to be ordered separately.

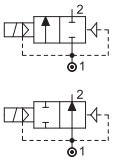

Options

Description	Symbol	Suffix
Nickel plated		**N**
Two positions manual override (for availability in normally open function, please contact the sales department)		**M**

The options, when this is possible, can be combined with each other. For options matching see the table below; For code key see from page 2.120.4

Options matching

Series	Size	Function	Standard options matching	
			N	**M**
AEN22	1/4" ÷ 2"	2/2 N.C.	●	●
AEV22			●	●
AEP22			●	●
AEN22A	1/4" ÷ 2"	2/2 N.O.	●	●(1)
AEV22A			●	●(1)
AEP22A			●	●(1)

Key

● allowed matching; - not allowed matching

(1) For availability, please contact the sales department

Standard materials

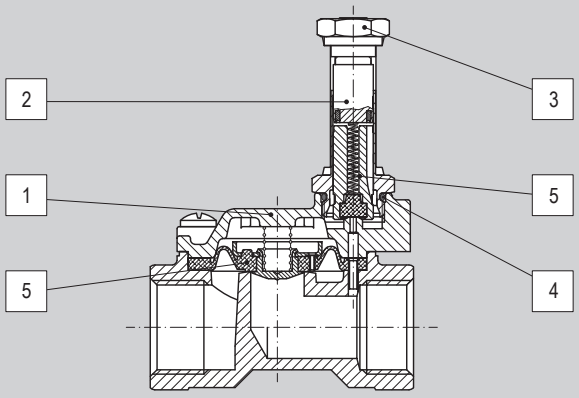

Position	Description	Material		
		AEN..	AEV..	AEP..
1	Body	Brass		
2	Plunger	Brass		
3	Locking nut	Brass		
4	Seals	NBR	FKM	EPDM
5	Internal parts	Stainless Steel		

Code key

Series	Seals	Function		Port	Options	
AE	**N**	**22**		**100**		
AE	N = NBR selas (-10°C ÷ +90°C) V = FKM seals (-10°C ÷ +130°C) P = EPDM seals (-10°C ÷ +140°C)	22 = 2/2	= Normally closed A = Normally open	014 = 1/4" 038 = 3/8" 012 = 1/2" 034 = 3/4" 100 = 1" 114 = 1 1/4" 112 = 1 1/2" 200 = 2"	N = Nickel-plated	M (1) = Bistable manual override

How to order

Series	Seals	Function		Port
AE	**N**	**22**		**100**

Notes

Options in the same grid are alternative to each others.

For further information on options and their matching, see page 2.120.3

Coils and connectors to be ordered separately, see page 2.120.50

(1) For availability with normally open function please contact sales department.

Accessories

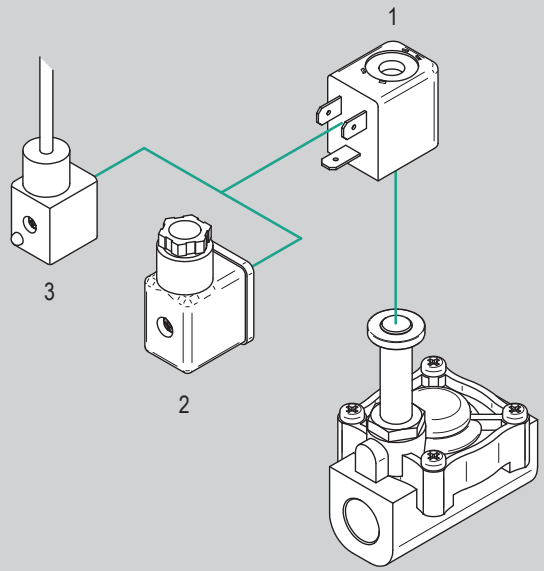

N.	Item	Description	Compliance	Matching						Code key page	Data sheet page
				AEN..		AEV..		AEP..			
				1/4"÷1"	1 1/4"÷2"	1/4"÷1"	1 1/4"÷2"	1/4"÷1"	1 1/4"÷2"		
1	ASA33..	Coil	DIN 43650	●	-	●	-	●	-	2.120.50	2.315.12
	ASA32..		DIN 43650/A	-	●	-	●	-	●		2.315.13
2	A12209	Connector	VDE 0110 - 1/89	●	-	●	-	●	-		2.318.12
	A18209			-	●	-	●	-	●		2.318.14
3	A12209..K	Cabled connector	VDE 0110 - 1/89	●	-	●	-	●	-		2.318.12
	A18209..K			-	●	-	●	-	●		2.318.14

Key
● matching accessory; - not matching accessory

Indirectly operated solenoid valves for water and steam
1/4" ÷ 2", 2/2 N.C.

Main features

Version	Series	Symbol
2/2 Normally closed with NBR seals	AEN22	
2/2 Normally closed with FKM seals	AEV22	
2/2 Normally closed with EPDM seals	AEP22	
2/2 Normally open with NBR seals	AEN22A	
2/2 Normally open with FKM seals	AEV22A	
2/2 Normally open with EPDM seals	AEP22A	



Technical data

Version		1/4"	3/8"	1/2"	3/4"	1"	1 1/4"	1 1/2"	2"
Code	AEN22	035501	035502	035503	035504	035505	035506	035507	035508
	AEV22	035511	035512	035513	035514	035515	035516	035517	035518
	AEP22	035521	035522	035523	035524	035525	035526	035527	035528
	AEN22A	035535	035581	035536	035558	035560	035575	035576	035574
	AEV22A	035582	035583	035519	035584	035585	035586	035587	035588
	AEP22A	035589	035590	035591	035592	035593	035594	035595	035596
Fluid		Compressed air with or without lubrication. Lubrication, if started, must be continued.							
Maximum pressure range		25 bar							
Temperature range	AEN22	-10°C ÷ +90°C							
	AEV22	-10°C ÷ +140°C							
	AEP22	-10°C ÷ +140°C							
Fluid maximum viscosity		25 cSt mm²/s							
Mounting		Preferably with coil facing upside							
Plunger		10 mm					13 mm		
Orifice		10 mm	12 mm		18 mm	25 mm	37 mm		50 mm
Flow		1,5 m³/h	2,2 m³/h	2,5 m³/h	5,5 m³/h	10,2 m³/h	18 m³/h	21 m³/h	36 m³/h
Differential pressure	Minimum	0,15 bar							
	Maximum AC / DC	15 bar			13 bar	10 bar			
Nominal power (AC)	Inrush	12 V					20 V		
	Rating	8 V					15 V		
Nominal power (DC)		6,5 Watt					10 Watt		
Coils matching*		ASA33..					ASA32..		
Connectors matching*		A122..					A182..		

*Notes

Coils and connectors to be ordered separately. For coils type ASA33 e ASA32 see from page 2.315.1. For connectors type A122 e A182 see from page 2.318.1

Standard dimensions

Type: **AEN22 - AEN22A**
AEV22 - AEV22A
AEP22 - AEP22A

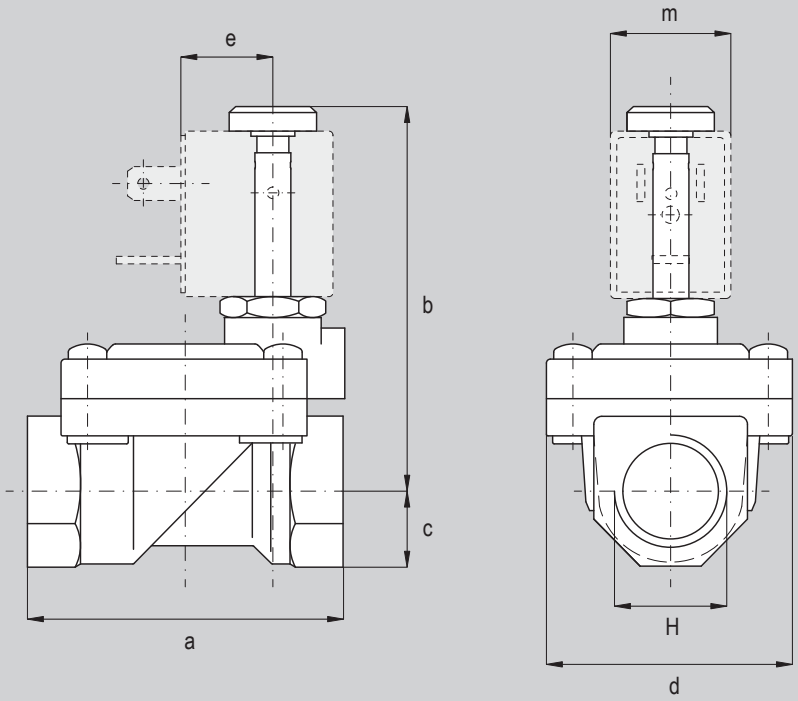

Item / Code			Symbol	Port (H)	a	b	c	d	e	m	Weight (g)
AEN22	AEV22	AEP22									
035501	035511	035521	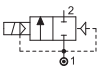	1/4"	49	65	11	32	16	22	230
035502	035512	035522		3/8"	59	70	14	45	16	22	420
035503	035513	035523		1/2"	59	70	14	45	16	22	390
035504	035514	035524		3/4"	79	76	18	55	16	22	650
035505	035515	035525		1"	96	85	20	72	16	22	1050
035506	035516	035526		1-1/4"	142	105	28	102	21	30	3000
035507	035517	035527		1-1/2"	142	105	28	102	21	30	2850
035508	035518	035528		2"	158	115	35	119	21	30	4300

Item / Code			Symbol	Port (H)	a	b	c	d	e	m	Weight (g)
AEN22A	AEV22A	AEP22A									
035535	035582	035589	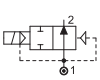	1/4"	49	65	11	32	16	22	230
035581	035583	035590		3/8"	59	73	14	45	16	22	420
035536	035519	035591		1/2"	59	73	14	45	16	22	390
035558	035584	035592		3/4"	79	76	18	55	16	22	650
035560	035585	035593		1"	96	85	20	72	16	22	1050
035575	035586	035594		1-1/4"	142	105	28	102	21	30	3000
035576	035587	035595		1-1/2"	142	105	28	102	21	30	2850
035574	035588	035596		2"	158	119	35	119	21	30	4300

Coils ASA33..



Voltage	Code	Item	Matching
12V DC	034311	ASA3301200	1/4"÷1"
12V AC	034312	ASA3301250	
24V DC	034313	ASA3302400	
24V AC	034314	ASA3302450	
48V AC	034315	ASA3304850	
110V AC	034316	ASA3311050	
230V AC	034317	ASA3323050	

Coils ASA32..



Voltage	Code	Item	Matching
12V DC	034321	ASA3201200	1 1/4"÷3"
12V AC	034322	ASA3201250	
24V DC	034323	ASA3202400	
24V AC	034324	ASA3202450	
48V AC	034325	ASA3204850	
110V AC	034326	ASA3211050	
230V AC	034327	ASA3223050	

Connectors A122..*



Code	Item	Description
032118	A12209N	Black standard
033521	A12209NK	Black standard cabled
032204	A12209T1	LED+VDR transparent 24VAC-DC
032205	A12209T2	LED+VDR transparent 115VAC-DC
032206	A12209T3	LED+VDR transparent 230VAC-DC
033522	A12209N1K	LED+VDR black cabled 24VAC-DC
033523	A12209N2K	LED+VDR black cabled 115VAC-DC
033524	A12209N3K	LED+VDR black cabled 230VAC-DC

* For coils type ASA33

Connectors A182..**



Code	Item	Description
032119	A18209N	Black standard
033531	A18209NK	Black standard cabled
032207	A18209T1	LED+VDR transparent 24VAC-DC
032208	A18209T2	LED+VDR transparent 115VAC-DC
032209	A18209T3	LED+VDR transparent 230VAC-DC
033532	A18209N1K	LED+VDR black cabled 24VAC-DC
033533	A18209N2K	LED+VDR black cabled 115VAC-DC
033534	A18209N3K	LED+VDR black cabled 230VAC-DC

* For coils type ASA32

INTEGRATED
circuits



Find out our
key products

- **Solution for most applications**
- **Easy and intuitive choice**
- **Excellent value for money**
- **Wide availability**
- **Fast delivery**

Features and certifications

Integrated circuits "flip-flop", solenoid operated or air operated, and "continuous cycling", solenoid operated or air operated.
For the solenoid operated, coils and connectors have to be ordered separately.
Supplied as standard in compliance to Reach and RoHS directives. On request the "flip-flop" body can be supplied according to 2014/34/EU ATEX Directive, classification Ex h, and also complete with ATEX coil and connector, in different classifications (see from page 2.320.1)..

Series AEF

from page 2.130.20



Series of integrated circuits "flip-flop", solenoid operated. Circuit composed by 1/4" 5/2 two stable position power valve. With the same signal applied twice at different times the cylinder carries out a complete cycle.
Coils and connectors to be ordered separately.

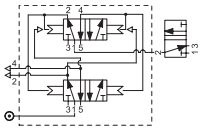

Series APF

from page 2.130.20



Series of integrated circuits "flip-flop", air operated. Circuit composed by 1/4" 5/2 two stable position power valve. With the same signal applied twice at different times the cylinder carries out a complete cycle.

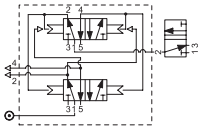

Series AEC

from page 2.130.40



Series of integrated circuits "continuos cycling", solenoid operated. Circuit composed by 1/8" 5/2 solenoid/spring power valve. Keeping the signal the cylinder carries out continuous cycling unitl the signal is not interrupted.
Coils and connectors to be ordered separately.

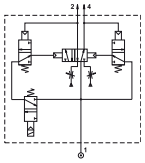

Series APC

from page 2.130.40



Series of integrated circuits "continuos cycling", air operated. Circuit composed by 1/8" 5/2 pilot/spring power valve. Keeping the signal the cylinder carries out continuous cycling until the signal is not interrupted.

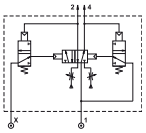

Code key

Series		Function	/	ATEX valve body(1)
A	E	F	1520	/

- E = Electric
- P = Pneumatic
- F = Flip-flop 1/4"
- C = Continuous cycling 1/8"
- 1520 = 5/2
- ATEX: CE Ex II 2G Ex h IIB T5 Gb / II 2D Ex h IIIC T100°C Db

How to order

Series	Function
AEF	1520

Notes

For standard materials see the table below.

Options in the same grid are alternative to each others.

Coils and connectors to be ordered separately, see page 2.130.4

ATEX note

(1) Only for series AEF and APF.

For ATEX coils and connectors choice, classification, features, dimensions and matching, see page 2.320.1

For further information on the ATEX 2014/34/EU Directive, on classifications and protections, see from page III.1

Standard materials

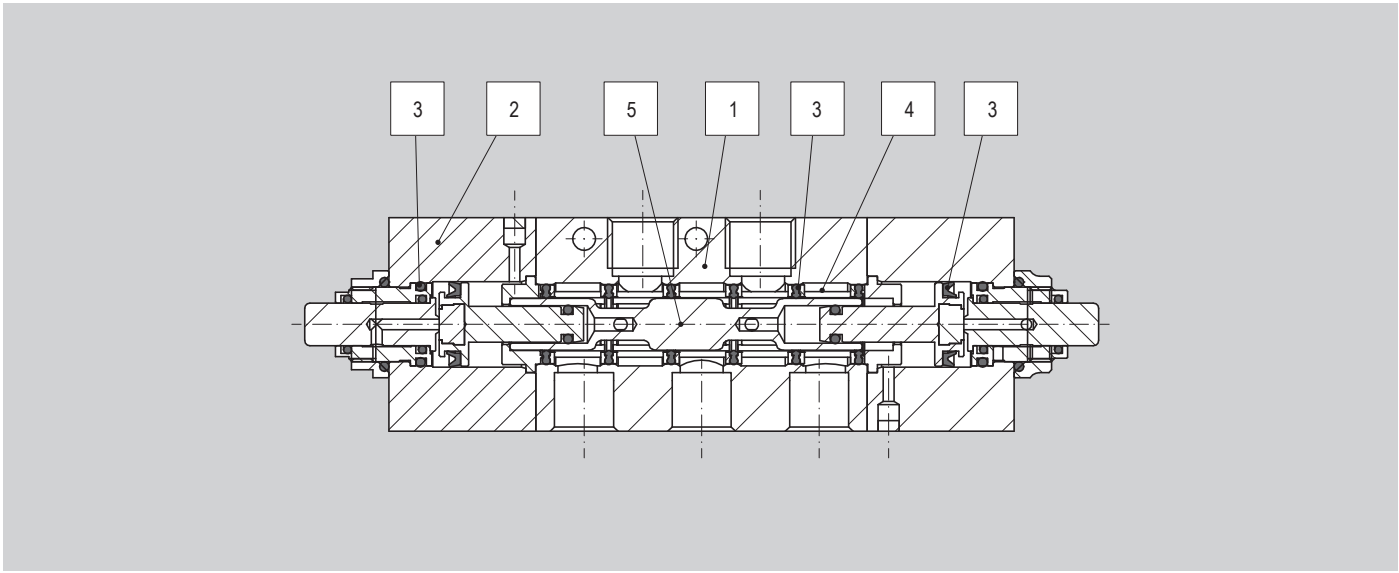

Position	Description	Material			
		AEF	APF	AEC	APC
1	Body	Anodized aluminium			
2	Base	Anodized aluminium			
3	Seals	HNBR			
4	Distancers	Tecnopolymer			
5	Spool	Hard anodized aluminium			

Accessories

Type: **AEF**
APF

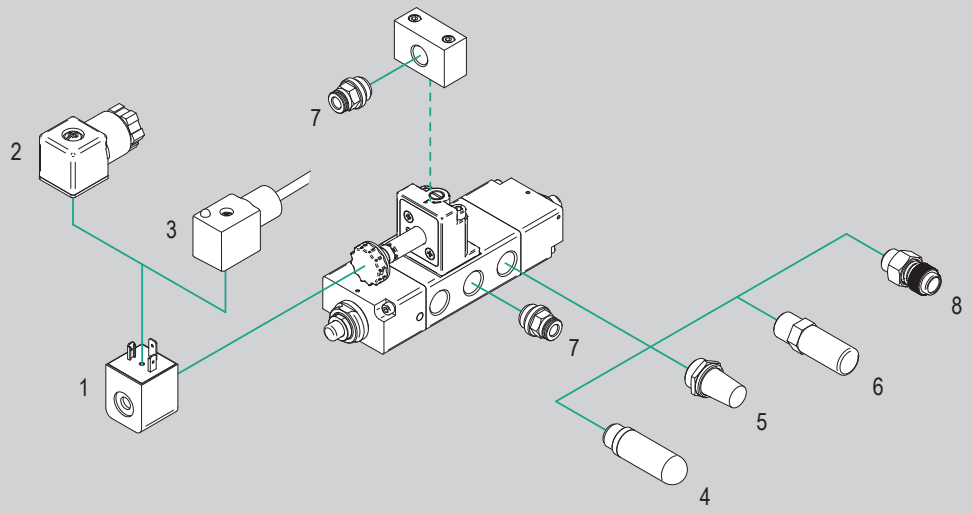

Type: **AEC**
APC

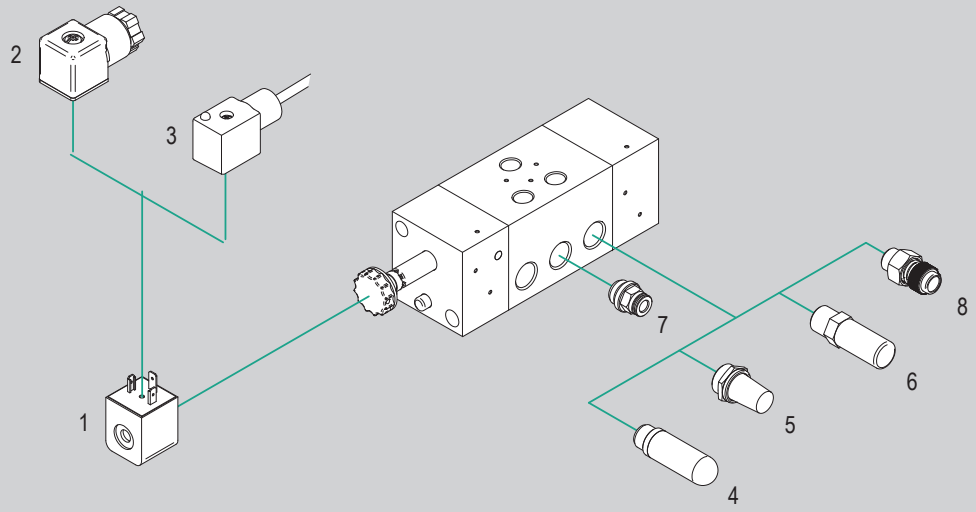

N.	Item	Description	Compliance	Matching				Code key page	Data sheet page
				AEF1520	APF1520	AEC1520	APC1520		
1	ASA12..	Coil	EN60204 VDE0580	●	-	●	-	2.130.90	2.315.10
2	A12209..	Connector	VDE 0110 - 1/89	●	-	●	-		2.318.12
3	A12209..K	Cabled connector	VDE 0110 - 1/89	●	-	●	-		
4	AS..	Plastic silencers	-	●	●	●	●	4.151.10	
	SP..		-	●	●	●	●	4.151.20	
5	A..	Sintered silencers	-	●	●	●	●	4.153.10	
6	M.	Metal silencers	-	●	●	●	●	4.155.10	
7	R..	Push-in fittings	UNI ISO 228/1 UNI ISO7/1 ISO R/232	●	●	●	●	4.2.1	
8	A..	Silenced exhaust restrictors	-	●	●	●	●	4.97.1	

Key
● matching accessory; - not matching accessory

Main features

Version	Code	Item	Symbol
1/4" Flip-flop solenoid operated	033170	AEF1520	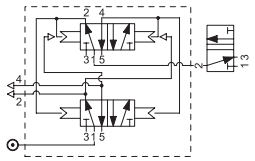
1/4" Flip-flop air operated	033160	APF1520	

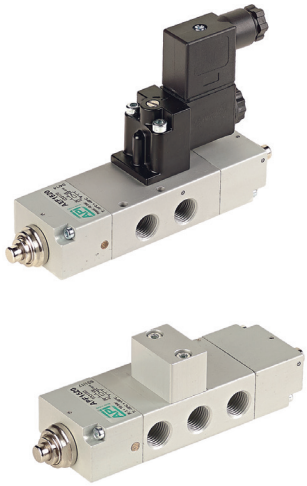

Technical data

Version		Flip-Flop solenoid operated	Flip-Flop air operated
Code		033170	033160
Item		AEF1520	APF1520
Fluid		Filtered compressed air with or without lubrication. Lubrication, if started, must be continued.	
Operator		Solenoid operated	Air operated
Plunger		9 mm	-
Ports		1/4"	
Function		5/2	
Pressure range		2,5 ÷ 10 bar	
Temperature range		-10°C ÷ +60°C	
Orifice		8 mm	
Flow		1.200 Nl/min.	
Manual override		Two stable position, flat	-
Mounting		In every position	
Response time	Energizing	20 ms.	-
	De-energizing	38 ms.	-
Coils matching		ASA12..	-
Connectors matching		A122..	-

Notes

Coils and connectors for electric integrated circuits to be ordered separately. For coils type ASA12 see from page 2.315.1. For connectors type A122 see from page 2.318.1

For electric integrated circuit complete with coils and connectors ATEX version, see from page 2.320.1

Standard dimensions type AEF

Type: **AEF**

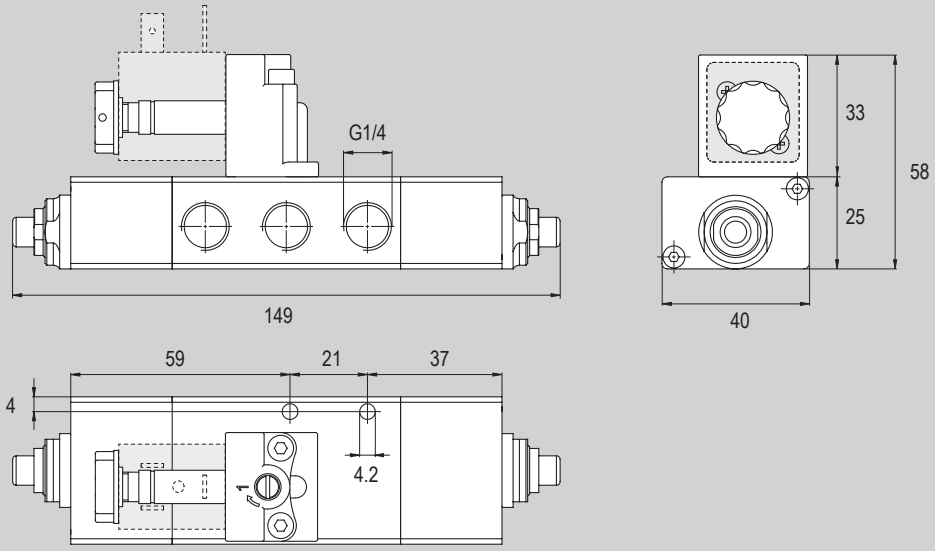

Version	Symbol	Code	Item
1/4" 5/2 Flip-flop solenoid operated	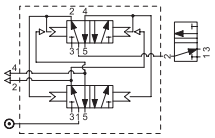	033170	AEF1520

Standard dimensions type APF

Type: **APF**

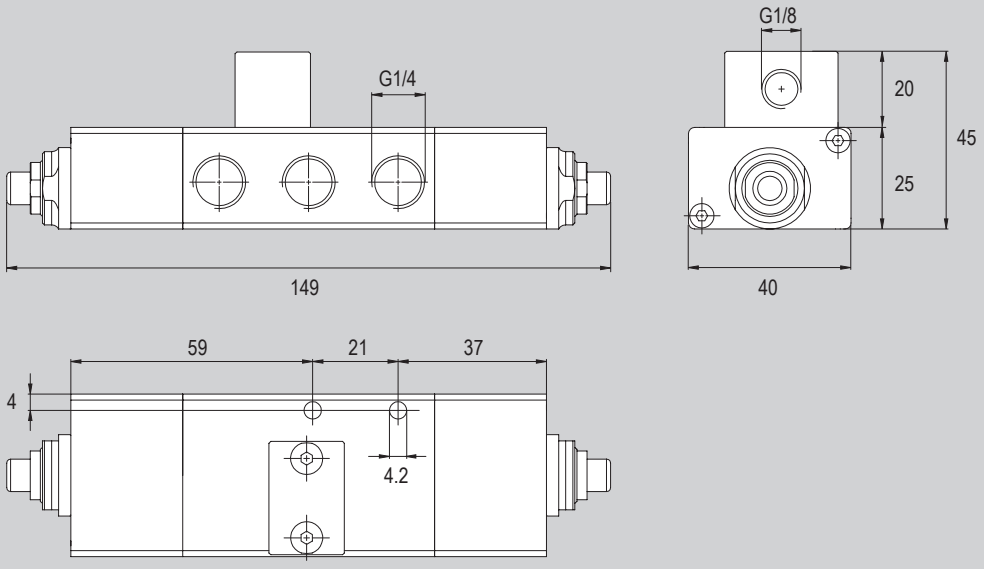

Version	Symbol	Code	Item
1/4" 5/2 Flip-flop air operated	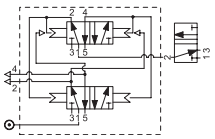	033160	APF1520

Main features

Version	Code	Item	Symbol
1/8" Continuous cycling solenoid operated	033172	AEC1520	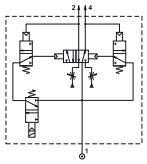
1/8" Continuous cycling air operated	033171	APC1520	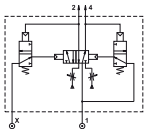





Technical data

Version		Continuous cycling solenoid operated	Continuous cycling air operated
Code		033172	033171
Item		AEC1520	APC1520
Fluid		Filtered compressed air with or without lubrication. Lubrication, if started, must be continued.	
Operator		Solenoid operated	Air operated
Plunger		9 mm	-
Ports		1/8"	
Function		5/2	
Pressure range		2,5 ÷ 8 bar	
Temperature range		-10°C ÷ +60°C	
Orifice		6 mm	
Flow		800 Nl/min.	
Manual override		Two stable position, flat	-
Mounting		In every position	
Response time	Energizing	20 ms.	-
	De-energizing	38 ms.	-
Coils matching		ASA12..	-
Connectors matching		A122..	-

Notes

Coils and connectors for electric integrated circuits to be ordered separately. For coils type ASA12 see from page 2.315.1. For connectors type A122 see from page 2.318.1

Standard dimensions type AEC

Type: **AEC**

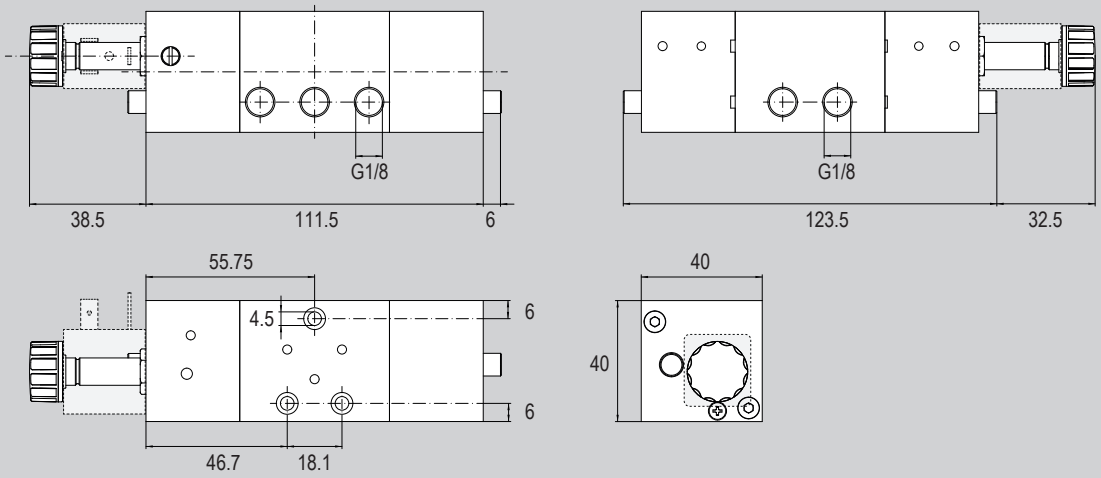

Version	Symbol	Code	Item
1/8" 5/2 Continuous cycling solenoid operated	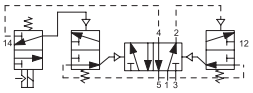	033172	AEC1520

Standard dimensions type APC

Type: **APC**

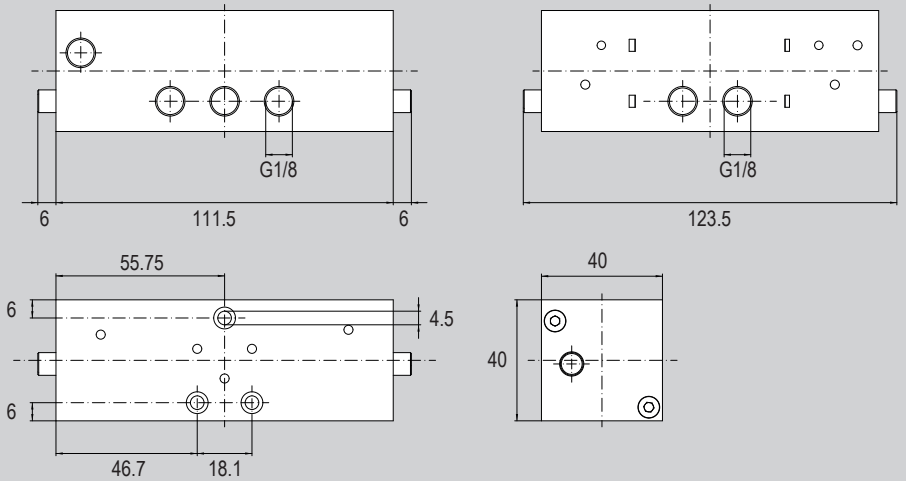

Version	Symbol	Code	Item
1/8" 5/2 Continuous cycling air operated	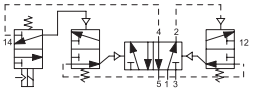	033171	APC1520

Coils ASA12..



Voltage	Code	Item	Matching
12V DC	032100	ASA1201200	AEF.. AEC..
12V AC	032101	ASA1201250	
24V DC	032102	ASA1202400	
24V AC	032103	ASA1202450	
48V AC	032104	ASA1204850	
110V AC	032105	ASA1211050	
230V AC	032106	ASA1223050	

Connectors A122..*



Code	Item	Description
032118	A12209N	Black standard
033521	A12209NK	Black standard cabled
032204	A12209T1	LED+VDR transparent 24VAC-DC
032205	A12209T2	LED+VDR transparent 115VAC-DC
032206	A12209T3	LED+VDR transparent 230VAC-DC
033522	A12209N1K	LED+VDR black cabled 24VAC-DC
033523	A12209N2K	LED+VDR black cabled 115VAC-DC
033524	A12209N3K	LED+VDR black cabled 230VAC-DC

* For coils type ASA12

Notes

MANUAL

lever operated valves Series A1



Find out our
key products



- **Solution for most applications**
- **Easy and intuitive choice**
- **Excellent value for money**
- **Wide availability**
- **Fast delivery**

Features and certifications

Spool valves, with static seals, high flow. Available in 1/8" and 1/4", manual lever operated, in many versions, functions and configurations.
Supplied as standard in compliance to Reach and RoHS directives, and SIL certified.
On request the valve body can be supplied according to 2014/34/EU ATEX Directive, classification Ex h.

Series A1 1/8" 3/2 side lever

from page 2.151.20



Series of spool valves, with static seals, high flow. Available in size 1/8", manual lever operated (side lever configuration), 3/2 lever/spring normally closed and 3/2 lever/lever detent.

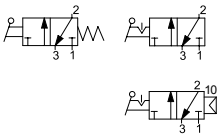

Series A1 1/8" 3/2 top lever

from page 2.151.30



Series of spool valves, with static seals, high flow. Available in size 1/8", manual lever operated (top lever configuration), 3/2 lever/lever detent.



Series A1 1/8" 3/2 push-pull

from page 2.151.40



Series of spool valves, with static seals, high flow. Available in size 1/8", manual lever operated (push-pull configuration), 3/2 spring return normally closed and 3/2 two positions detent.

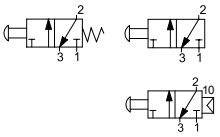

Series A1 1/8" 5/2 side lever

from page 2.151.60



Series of spool valves, with static seals, high flow. Available in size 1/8", manual lever operated (side lever configuration), 5/2 lever/spring and 5/2 lever/lever detent.

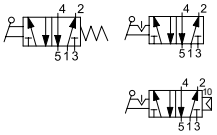

Series A1 1/8" 5/2 top lever

from page 2.151.70



Series of spool valves, with static seals, high flow. Available in size 1/8", manual lever/spring (top lever configuration), 5/2 lever/lever detent.



Series A1 1/8" 5/2 push-pull

from page 2.151.80



Series of spool valves, with static seals, high flow. Available in size 1/8", manual lever operated (push-pull configuration), 5/2 spring return and 5/2 two positions detent.

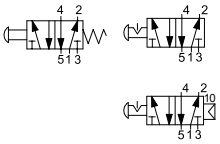

Series A1 1/8" 5/3 side lever

from page 2.151.100



Series of spool valves, with static seals, high flow. Available in size 1/8", manual lever operated (side lever configuration), 5/3 lever/spring closed centres, open centres and pressurized centres, or 5/3 3 positions detent closed centres, open centres and pressurized centres.

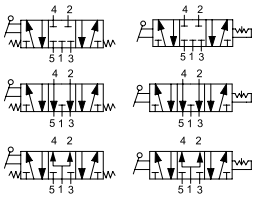

Series A1 1/8" 5/3 top lever

from page 2.151.110



Series of spool valves, with static seals, high flow. Available in size 1/8", manual lever operated (top lever configuration), 5/3 lever/spring open centres or 5/3 3 positions detent open centres.

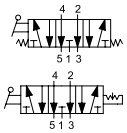

Series A1 1/4" 3/2 side lever

from page 2.152.20



Series of spool valves, with static seals, high flow. Available in size 1/4", manual lever operated (side lever configuration), 3/2 lever/spring normally closed and 3/2 lever/lever detent.

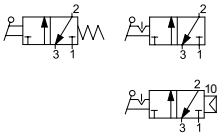

Series A1 1/4" 3/2 top lever

from page 2.152.30



Series of spool valves, with static seals, high flow. Available in size 1/4", manual lever operated (top lever configuration), 3/2 lever/lever detent.



Series A1 1/4" 3/2 push-pull

from page 2.152.40



Series of spool valves, with static seals, high flow. Available in size 1/4", manual lever operated (push-pull configuration), 3/2 spring return normally closed and 3/2 two positions detent.

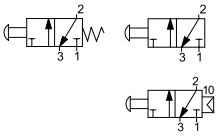

Series A1 1/4" 5/2 side lever

from page 2.152.60



Series of spool valves, with static seals, high flow. Available in size 1/4", manual lever operated (side lever configuration), 5/2 lever/spring and 5/2 lever/lever detent.

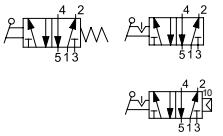

Series A1 1/4" 5/2 top lever

from page 2.152.70



Series of spool valves, with static seals, high flow. Available in size 1/4", manual lever operated (top lever configuration), 5/2 lever/lever detent.



Series A1 1/4" 5/2 push-pull

from page 2.152.80



Series of spool valves, with static seals, high flow. Available in size 1/4", manual lever operated (push-pull configuration), 5/2 spring return and 5/2 two positions detent.

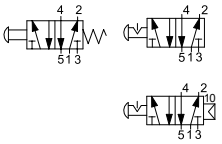

Series A1 1/4" 5/3 side lever

from page 2.152.100



Series of spool valves, with static seals, high flow. Available in size 1/4", manual lever operated (side lever configuration), 5/3 lever/spring closed centres, open centres and pressurized centres, or 5/3 3 positions detent closed centres, open centres and pressurized centres.

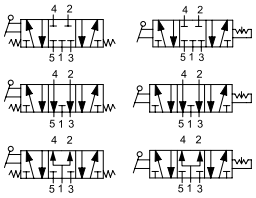

Options

Description		Symbol	Suffix
Low temperatures seals	-25°C ÷ +60°C		**BT**
ATEX valve body*			**/ATEX**
Special versions on request			**/S**

The options, when this is possible, can be combined with each other. For options matching see the table below; For code key see from page 2.150.6

Options matching

Series	Size	Function	Standard options matching	
			BT	**/ATEX**
A1	1/8"	3/2	●	●
		5/2	●	●
		5/3	●	●
	1/4"	3/2	●	●
		5/2	●	●
		5/3	●	●

Key

● allowed matching; – not allowed matching

Code key

Series	Actuation	Size	Function	Configurations	Options	/	ATEX valve body
A1	**MA**	**2**	**50**	**LL**	**P**	**/**	

- A1
- MA = Manual
- 1 = 1/8"
- 2 = 1/4"
- 30 = 3/2 Lever/Spring Normally closed
- 32 = 3/2 Lever/Lever detent
- 50 = 5/2 Lever/Spring
- 51 = 5/2 Lever/Lever detent
- 70 = 5/3 Lever/Spring Closed Centres
- 71 = 5/3 Lever/Spring Open Centres
- 72 = 5/3 Lever/Spring Pressurized Centres
- 73 = 5/3 Closed Centres 3 positions detent
- 74 = 5/3 Open Centres 3 positions detent
- 75 = 5/3 Pressurized Centres 3 positions detent
- LL = Side lever
- LT(1) = Top lever
- TT(2) = Push-pull
- P(3) = Lever/Pilot
- BT = Low temperatures seals
- ATEX: CE Ex II 2G Ex h IIB T5 Gb / II 2D Ex h IIIC T100°C Db

How to order

Series	Actuation	Size	Function	Configuration	Options
A1	**MA**	**2**	**50**	**LL**	**P**

Notes

Options in the same grid are alternative to each others.

For further information on options and their matching, see page 2.20.5.

(1) Configuration top lever (LT) available for 3/2 lever/spring N.C., 3/2 lever/lever detent, 5/2 lever/spring, size 1/8" and 1/4", and 5/3 O.C. lever/spring, 5/3 O.C. 3 positions detent, size 1/8".

(2) Configuration push-pull (TT) available for 3/2 lever/spring N.C., 3/2 lever/lever detent, 5/2 lever/spring and 5/2 lever/lever detent.

(3) Option lever/pilot (P) available for 3/2 lever/lever detent and 5/2 lever/lever detent in configuration side lever and push-pull only.

For further information on the ATEX 2014/34/EU Directive, on classifications and protections, see from page III.1

Standard materials

Type: **top lever**

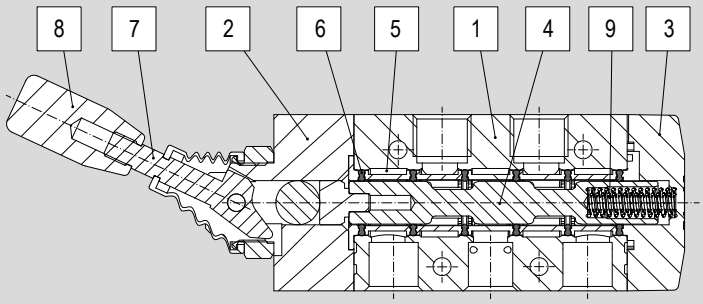

Type: **side lever**

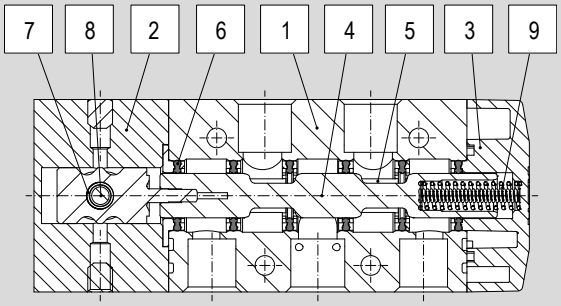

Type: **top lever 5/3 1/8"**

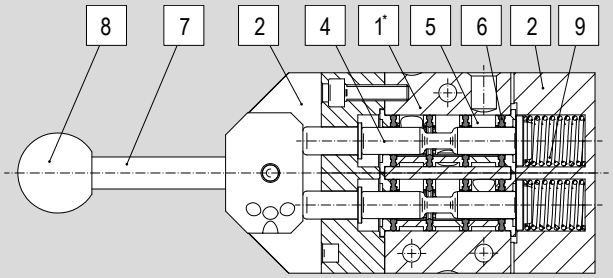

Type: **push-pull**

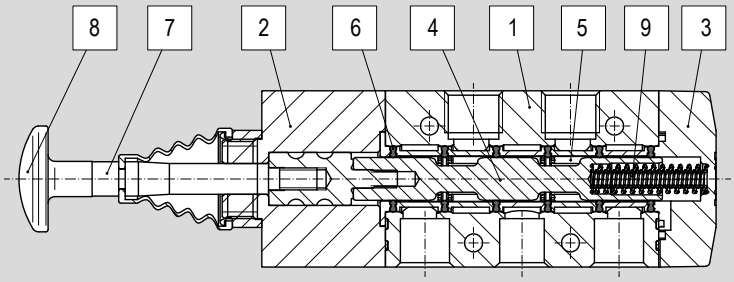

Position	Description	Material	
		1/8"	1/4"
1	Body	Die-cast painted aluminium*	
2	Front cover	Anodized aluminium	
3	Rear cover	Tecnopolymer	
4	Spool	Hard anodized aluminium	
5	Distancers	Tecnopolymer	
6	Seals	HNBR	
7	Lever	Steel	
8	Lever knob	Plastic	
9	Spring	Spring steel	

* Anodized aluminium for type A1MA171LT and type A1MA174LT

Accessories

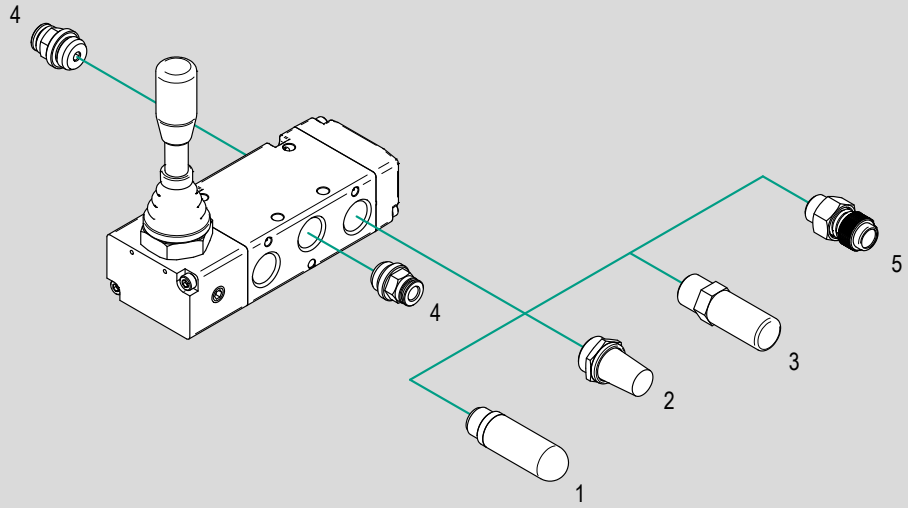

N.	Item	Description	Compliance	Matching		Code key page	Data sheet page
				1/8"	1/4"		
1	AS..	Plastic silencers	-	●	●	4.151.10	
	SP..			●	●	4.151.20	
2	A..	Sintered silencers	-	●	●	4.153.10	
3	M..	Metal silencers	-	●	●	4.155.10	
4	R..	Push-in fittings	UNI ISO 228/1 UNI ISO7/1 ISO R/232	●	●	4.2.1	
5	A..	Silenced exhaust restrictors	-	●	●	4.97.1	

Key
● matching accessory; – not matching accessory

Manual lever operated valves series A1

1/8", 3/2 side lever

Main features

Version	Code	Item	Symbol
3/2 lever/spring N.C. side lever	034071	A1MA130LL	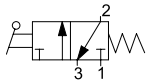
3/2 lever/lever detent side lever	034070	A1MA132LL	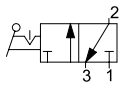
3/2 lever/pilot side lever	034294	A1MA132LLP	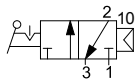





Technical data

Version	3/2 normally closed lever/spring	3/2 lever/lever detent	3/2 lever/pilot
Code	034071	034070	034294
Item	A1MA130LL	A1MA132LL	A1MA132LLP
Size	1/8"		
Orifice	6.5 mm		
Configuration	Side lever		
Fluid	Compressed air with or without lubrication. Lubrication, if started, must be continued.		
Pressure range	0 ÷ 10 bar		
Temperature range	-10°C ÷ +80°C (standard) -25°C ÷ +60°C (BT)		
Flow at 6 bar with ΔP 1 bar	650 Nl/min.		
Mounting	In every position		

Standard dimensions

Type: **3/2 lever/spring N.C.**
3/2 lever/lever detent

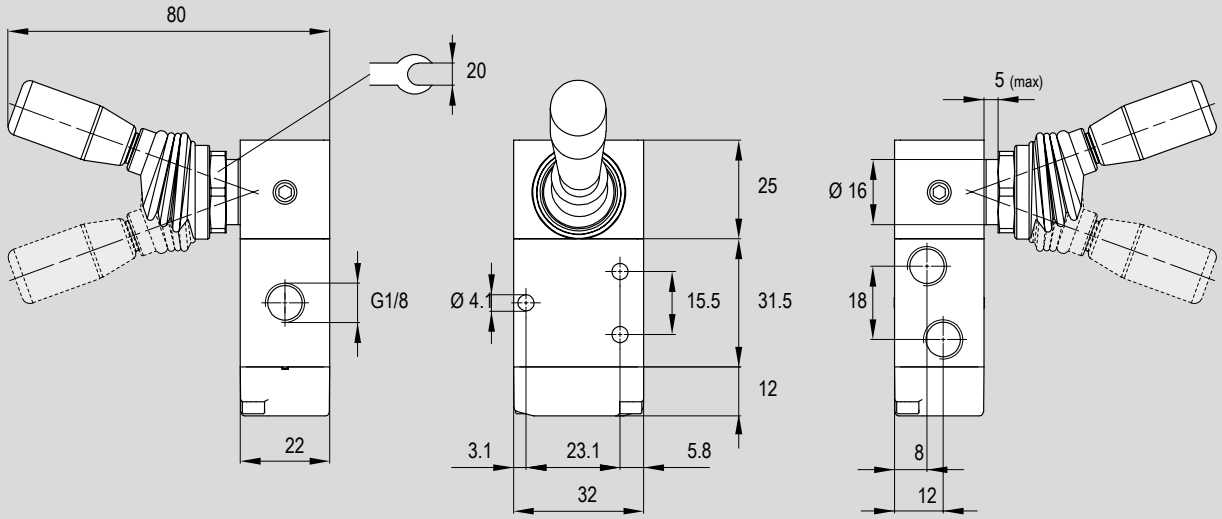

Type: **3/2 lever/pilot**

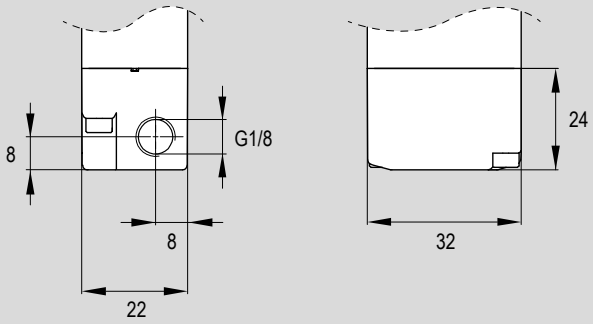

Version	Symbol	Code	Item
1/8" 3/2 lever/spring normally closed side lever	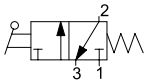	034071	A1MA130LL
1/8" 3/2 lever/lever detent side lever	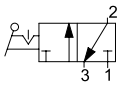	034070	A1MA132LL
1/8" 3/2 lever/pilot side lever	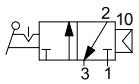	034294	A1MA132LLP

Manual lever operated valves series A1

1/8", 3/2 top lever

Main features

Version	Code	Item	Symbol
3/2 lever/lever detent top lever	034082	A1MA132LT	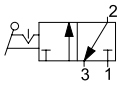



Technical data

Version	3/2 lever/lever detent
Code	034082
Item	A1MA132LT
Size	1/8"
Orifice	6.5 mm
Configuration	Top lever
Fluid	Compressed air with or without lubrication. Lubrication, if started, must be continued.
Pressure range	0 ÷ 10 bar
Temperature range	-10°C ÷ +80°C (standard) -25°C ÷ +60°C (BT)
Flow at 6 bar with ΔP 1 bar	650 Nl/min.
Mounting	In every position

Standard dimensions

Type: **3/2 lever/lever detent**

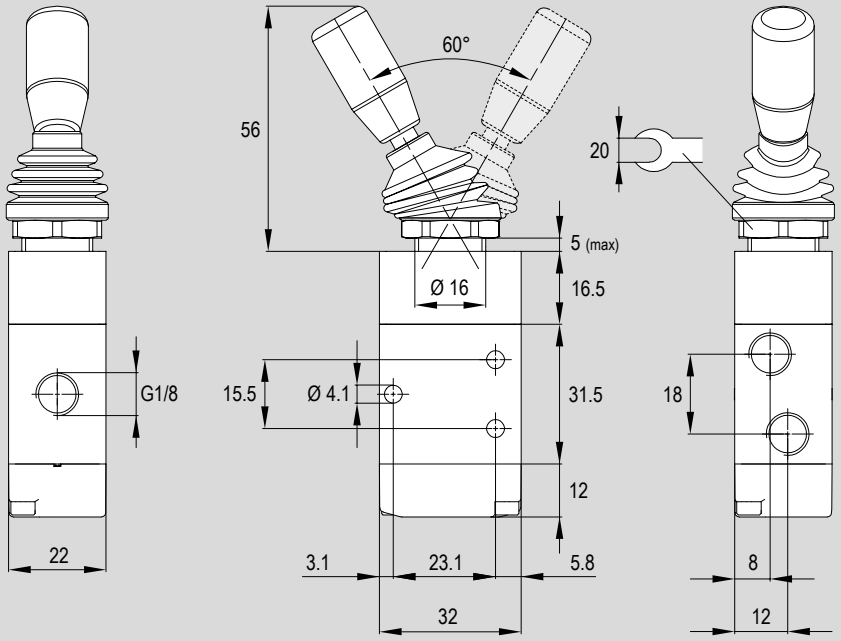

Version	Symbol	Code	Item
1/8" 3/2 lever/lever detent top lever	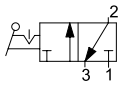	034082	A1MA132LT

Manual lever operated valves series A1

1/8", 3/2 push-pull

Main features

Version	Code	Item	Symbol
3/2 N.C. spring return	034083	A1MA130TT	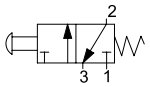
3/2 two positions detent	034084	A1MA132TT	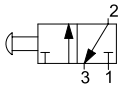
3/2 pilot return	034360	A1MA132TTP	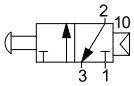



Technical data

Version	3/2 normally closed spring return	3/2 two positions detent	3/2 pilot return
Code	034083	034084	034360
Item	A1MA130TT	A1MA132TT	A1MA132TTP
Size	1/8"		
Orifice	6.5 mm		
Configuration	Push-pull		
Fluid	Compressed air with or without lubrication. Lubrication, if started, must be continued.		
Pressure range	0 ÷ 10 bar		
Temperature range	-10°C ÷ +80°C (standard) -25°C ÷ +60°C (BT)		
Flow at 6 bar with ΔP 1 bar	650 Nl/min.		
Mounting	In every position		

Standard dimensions

Type: **3/2 N.C. spring return**
3/2 two positions detent

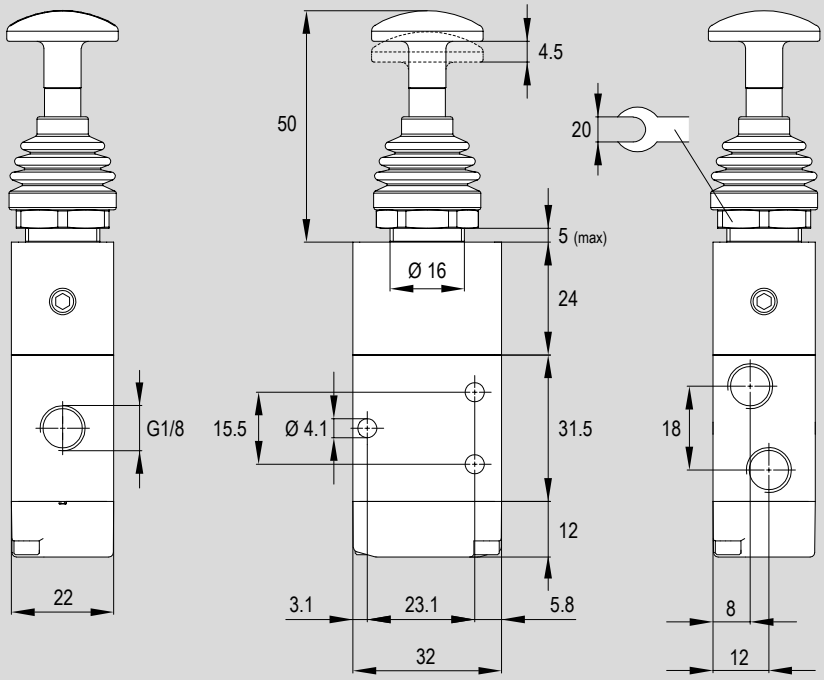

Type: **3/2 pilot return**

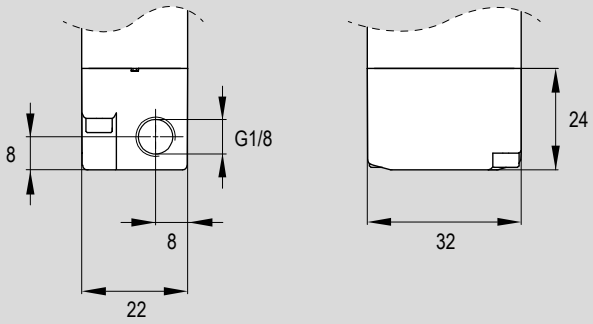

Version	Symbol	Code	Item
1/8" 3/2 normally closed spring return	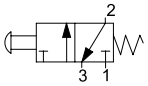	034083	A1MA130TT
1/8" 3/2 two positions detent	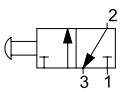	034084	A1MA132TT
1/8" 3/2 pilot return	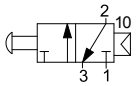	034360	A1MA132TTP

Manual lever operated valves series A1

1/8", 5/2 side lever

Main features

Version	Code	Item	Symbol
5/2 lever/spring side lever	034064	A1MA150LL	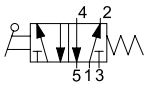
5/2 lever/lever detent side lever	034063	A1MA151LL	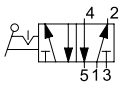
5/2 lever/pilot side lever	034169	A1MA151LLP	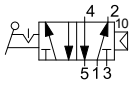



Technical data

Version	5/2 lever/spring	5/2 lever/lever detent	5/2 lever/pilot
Code	034063	034063	034169
Item	A1MA150LL	A1MA151LL	A1MA151LLP
Size	1/8"		
Orifice	6.5 mm		
Configuration	Side lever		
Fluid	Compressed air with or without lubrication. Lubrication, if started, must be continued.		
Pressure range	0 ÷ 10 bar		
Temperature range	-10°C ÷ +80°C (standard) -25°C ÷ +60°C (BT)		
Flow at 6 bar with ΔP 1 bar	650 Nl/min.		
Mounting	In every position		

Standard dimensions

Type: **5/2 lever/spring**
5/2 lever/lever detent

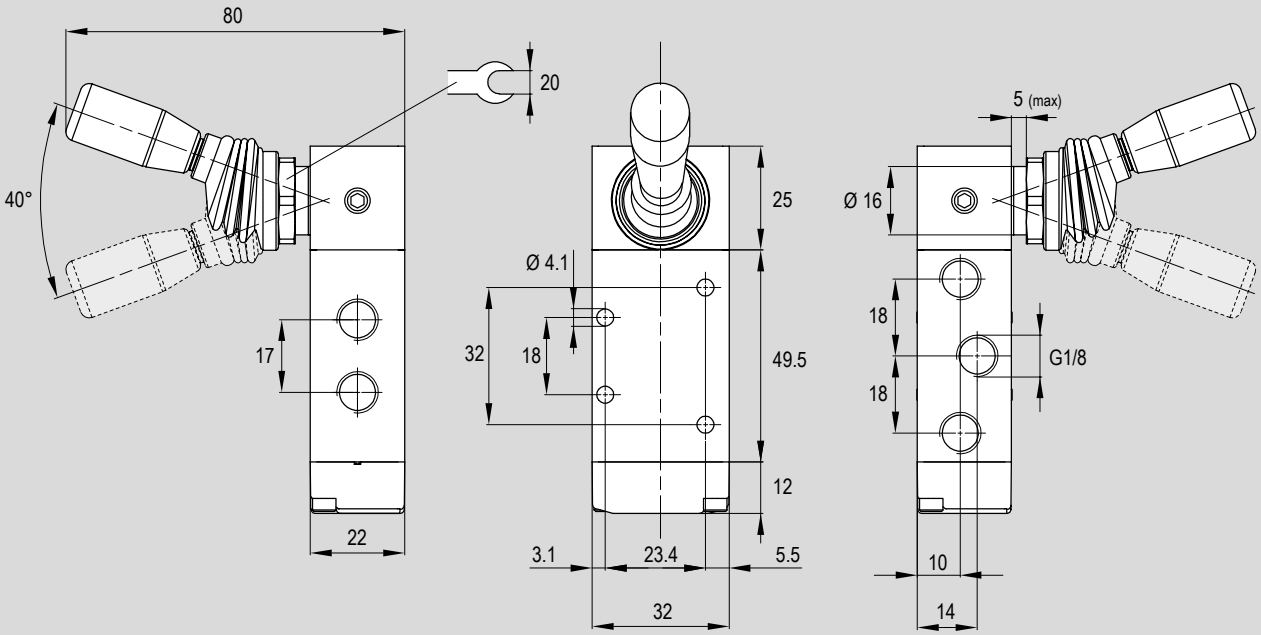

Type: **5/2 lever/pilot**

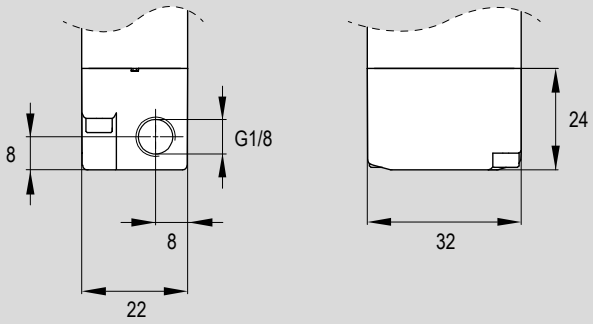

Version	Symbol	Code	Item
1/8" 5/2 lever/spring side lever	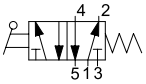	034064	A1MA150LL
1/8" 5/2 lever/lever detent side lever	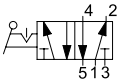	034063	A1MA151LL
1/8" 5/2 lever/pilot side lever	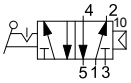	034169	A1MA151LLP

Manual lever operated valves series A1

1/8", 5/2 top lever

Main features

Version	Code	Item	Symbol
5/2 lever/lever detent top lever	034091	A1MA151LT	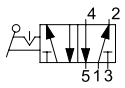



Technical data

Version	5/2 lever/lever detent
Code	034091
Item	A1MA151LT
Size	1/8"
Orifice	6.5 mm
Configuration	Top lever
Fluid	Compressed air with or without lubrication. Lubrication, if started, must be continued.
Pressure range	0 ÷ 10 bar
Temperature range	-10°C ÷ +80°C (standard) -25°C ÷ +60°C (BT)
Flow at 6 bar with ΔP 1 bar	650 Nl/min.
Mounting	In every position

Standard dimensions

Type: **5/2 lever/lever detent**

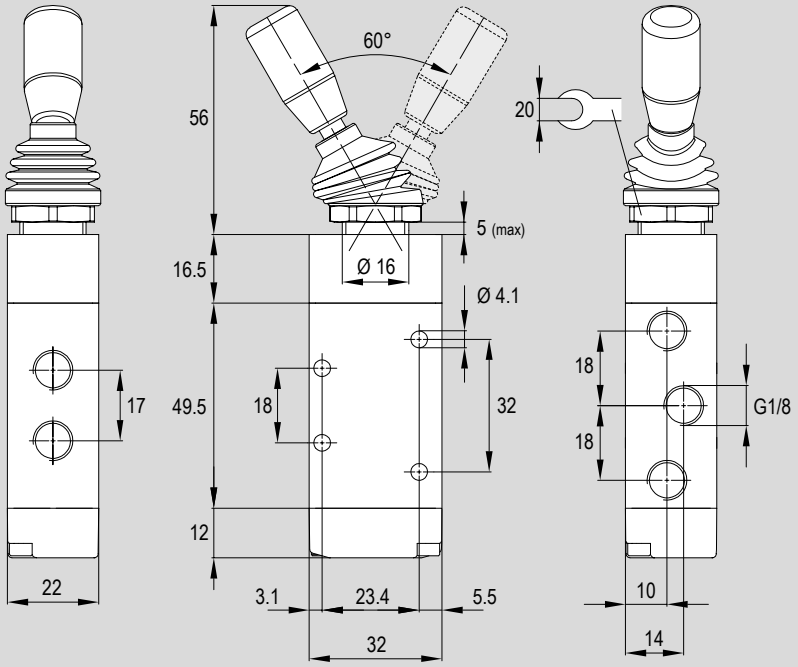

Version	Symbol	Code	Item
1/8" 5/2 lever/lever detent top lever	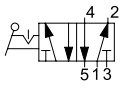	034091	A1MA151LT

Manual lever operated valves series A1

1/8", 5/2 push-pull

Main features

Version	Code	Item	Symbol
5/2 spring return	034092	A1MA150TT	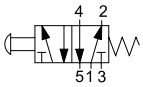
5/2 two positions detent	034093	A1MA151TT	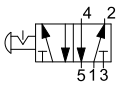
5/2 pilot return	034361	A1MA151TTP	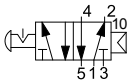



Technical data

Version	5/2 spring return	5/2 two positions detent	5/2 pilot return
Code	034092	034093	034361
Item	A1MA150TT	A1MA151TT	A1MA151TTP
Size	1/8"		
Orifice	6.5 mm		
Configuration	Push-pull		
Fluid	Compressed air with or without lubrication. Lubrication, if started, must be continued.		
Pressure range	0 ÷ 10 bar		
Temperature range	-10°C ÷ +80°C (standard) -25°C ÷ +60°C (BT)		
Flow at 6 bar with ΔP 1 bar	650 Nl/min.		
Mounting	In every position		

Standard dimensions

Type: **5/2 spring return**
5/2 two positions detent

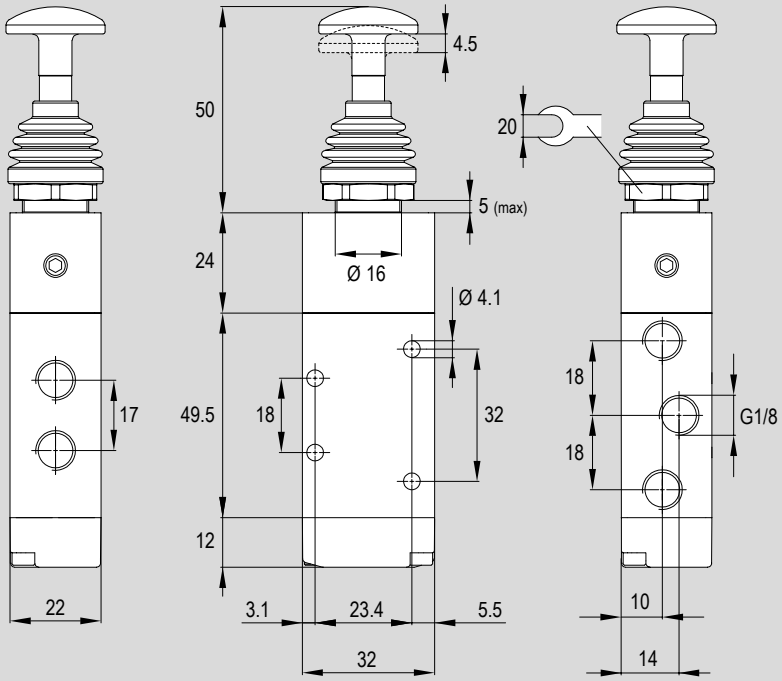

Type: **5/2 pilot return**

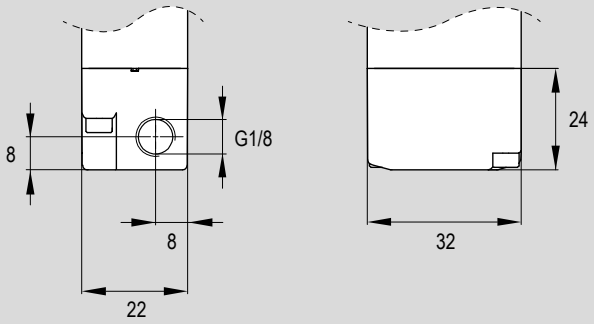

Version	Symbol	Code	Item
1/8" 5/2 spring return	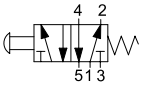	034092	A1MA150TT
1/8" 5/2 two positions detent	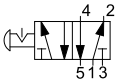	034093	A1MA151TT
1/8" 5/2 pilot return	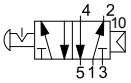	034361	A1MA151TTP

Manual lever operated valves series A1

1/8", 5/3 side lever

Main features

Version	Code	Item	Symbol
5/3 lever/spring C.C. side lever	034062	A1MA170LL	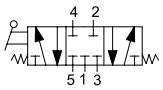
5/3 lever/spring O.C. side lever	034066	A1MA171LL	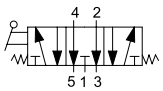
5/3 lever/spring P.C. side lever	034065	A1MA172LL	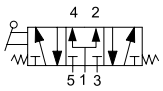
5/3 3 positions detent C.C. side lever	034068	A1MA173LL	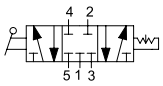
5/3 3 positions detent O.C. side lever	034067	A1MA174LL	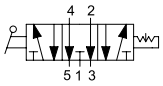
5/3 3 positions detent P.C. side lever	034069	A1MA175LL	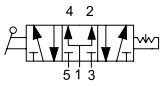





Technical data

Version	5/3 lever/spring closed centres	5/3 lever/spring open centres	5/3 lever/spring pressurized centres	5/3 3 positions detent closed centres	5/3 3 positions detent open centres	5/3 3 positions detent pressurized centres
Code	034062	034066	034065	034068	034067	034069
Item	A1MA170LL	A1MA171LL	A1MA172LL	A1MA173LL	A1MA174LL	A1MA175LL
Size	1/8"					
Orifice	6.5 mm					
Configuration	Side lever					
Fluid	Compressed air with or without lubrication. Lubrication, if started, must be continued.					
Pressure range	0 ÷ 10 bar					
Temperature range	-10°C ÷ +80°C (standard) -25°C ÷ +60°C (BT)					
Flow at 6 bar with ΔP 1 bar	650 Nl/min.					
Mounting	In every position					

Standard dimensions

Type: **5/3 lever/spring C.C.**
5/3 lever/spring O.C.
5/3 lever/spring P.C.

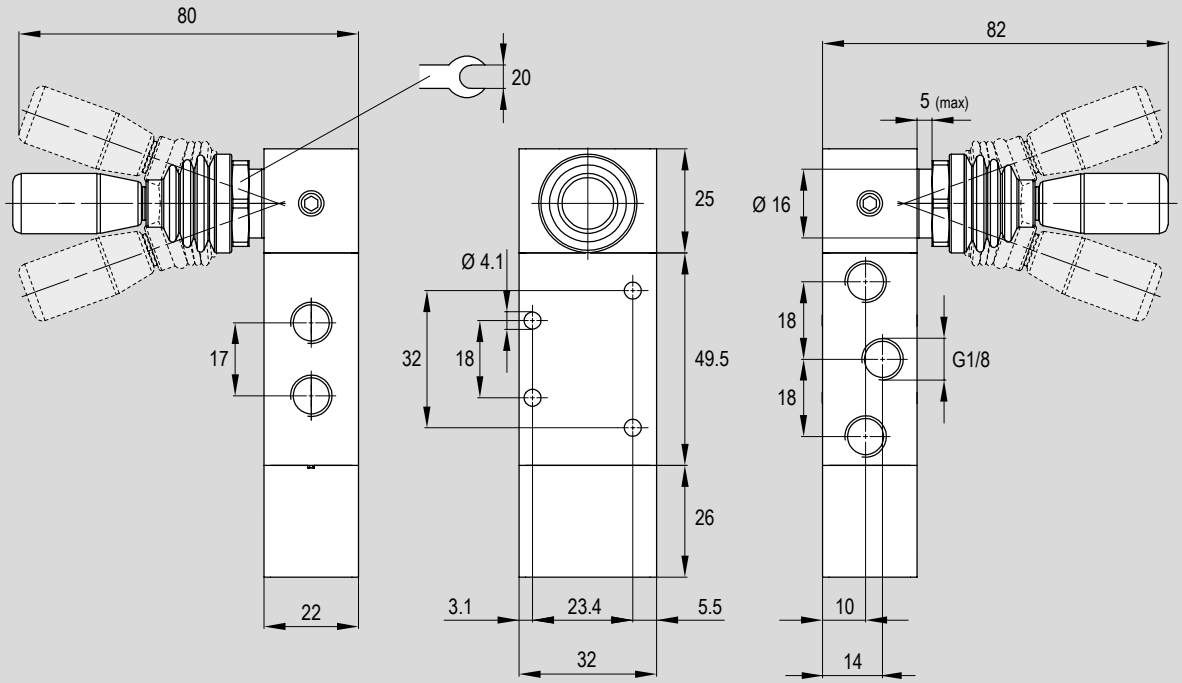

Version	Symbol	Code	Item
1/8" 5/3 lever/spring closed centres side lever	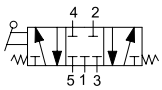	034062	A1MA170LL
1/8" 5/3 lever/spring open centres side lever	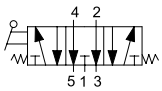	034066	A1MA171LL
1/8" 5/3 lever/spring pressurized centres side lever	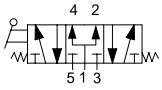	034065	A1MA172LL

Standard dimensions

Type: **5/3 3 positions detent C.C.**
5/3 3 positions detent O.C.
5/3 3 positions detent P.C.

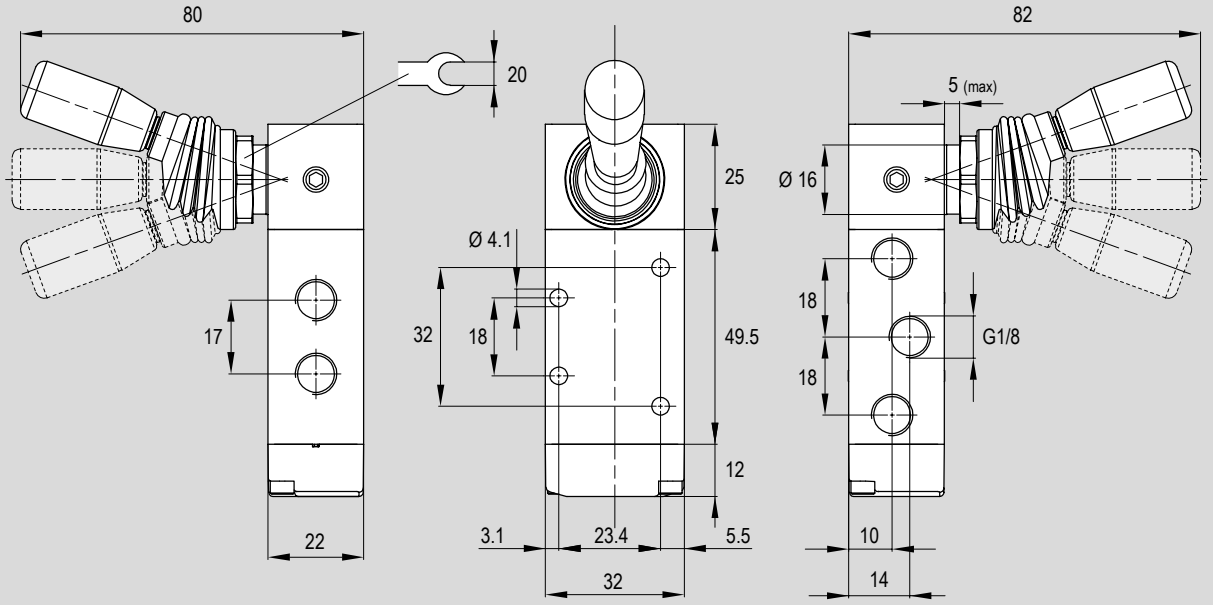

Version	Symbol	Code	Item
1/8" 5/3 3 positions detent closed centres side lever	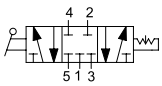	034068	A1MA173LL
1/8" 5/3 3 positions detent open centres side lever	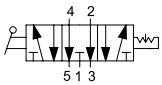	034067	A1MA174LL
1/8" 5/3 3 positions detent pressurized centres side lever	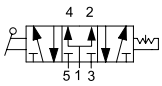	034069	A1MA175LL

Manual lever operated valves series A1

1/8", 5/3 top lever

Main features

Version	Code	Item	Symbol
5/3 lever/spring O.C. top lever	034662	A1MA171LT	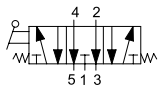
5/3 3 positions detent O.C. top lever	034663	A1MA174LT	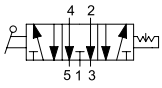



Technical data

Version	5/3 lever/spring open centres	5/3 3 positions detent open centres
Code	034662	034663
Item	A1MA171LT	A1MA174LT
Size	1/8"	
Orifice	6.5 mm	
Configuration	Top lever	
Fluid	Compressed air with or without lubrication. Lubrication, if started, must be continued.	
Pressure range	0 ÷ 10 bar	
Temperature range	-10°C ÷ +80°C (standard) -25°C ÷ +60°C (BT)	
Flow at 6 bar with ΔP 1 bar	650 Nl/min.	
Mounting	In every position	

Standard dimensions

Type: **5/3 lever/spring O.C.**
5/3 3 positions detent O.C.

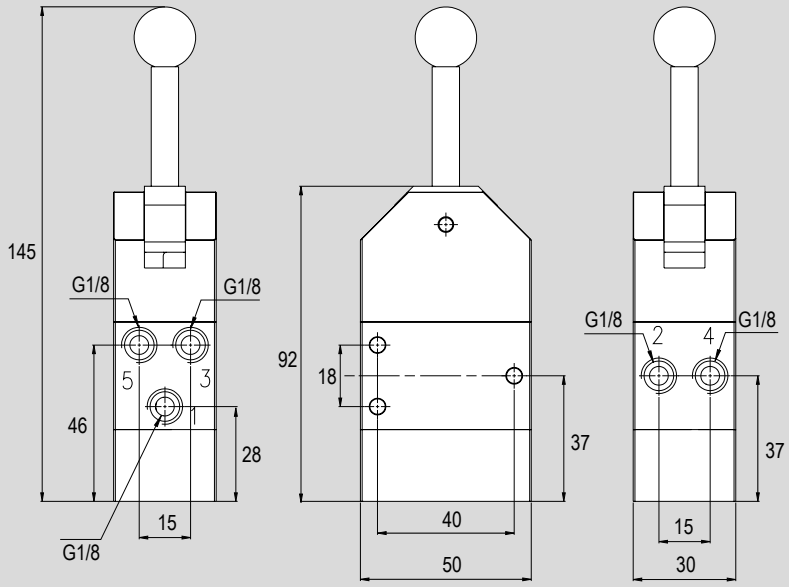

Version	Symbol	Code	Item
1/8" 5/3 lever/spring open centres top lever	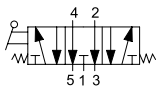	034662	A1MA171LT
1/8" 5/3 3 positions detent open centres top lever	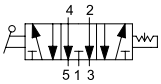	034663	A1MA174LT

Notes

Manual lever operated valves series A1

1/4", 3/2 side lever

Main features

Version	Code	Item	Symbol
3/2 N.C. lever/spring side lever	034077	A1MA230LL	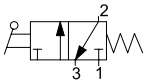
3/2 lever/lever detent side lever	034076	A1MA232LL	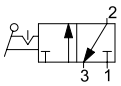
3/2 lever/pilot side lever	034295	A1MA232LLP	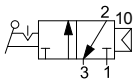



Technical data

Version	3/2 normally closed lever/spring	3/2 lever/lever detent	3/2 lever/pilot
Code	034077	034076	034295
Item	A1MA230LL	A1MA232LL	A1MA232LLP
Size	1/4"		
Orifice	8 mm		
Configuration	Side lever		
Fluid	Compressed air with or without lubrication. Lubrication, if started, must be continued.		
Pressure range	0 ÷ 10 bar		
Temperature range	-10°C ÷ +80°C (standard) -25°C ÷ +60°C (BT)		
Flow at 6 bar with ΔP 1 bar	1.100 Nl/min.		
Mounting	In every position		

Standard dimensions

Type: **3/2 lever/spring N.C.**
3/2 lever/lever detent

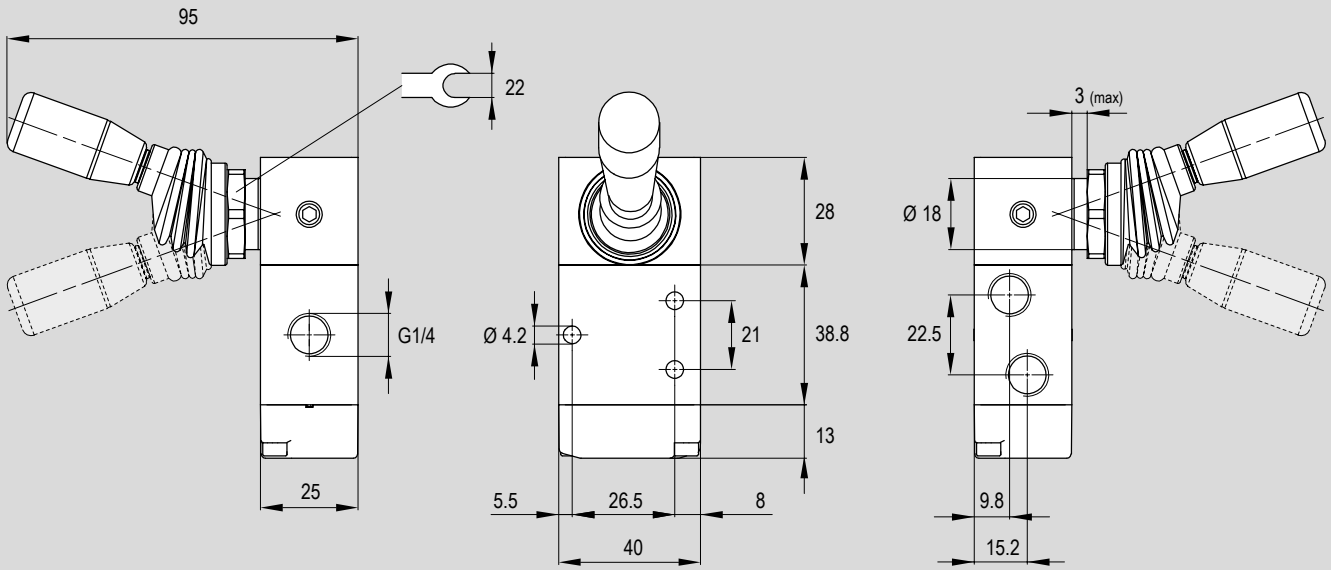

Type: **3/2 lever/pilot**

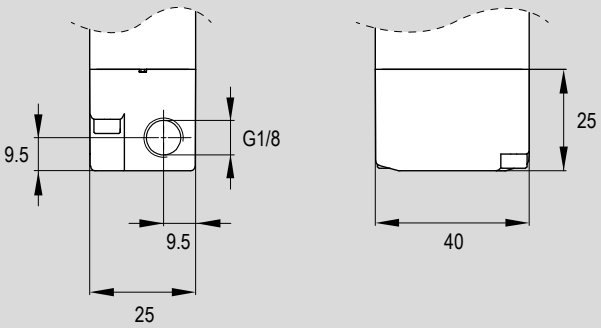

Version	Symbol	Code	Item
1/4" 3/2 lever/spring normally closed side lever	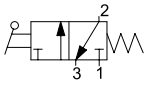	034077	A1MA230LL
1/4" 3/2 lever/lever detent side lever	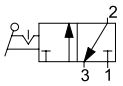	034076	A1MA232LL
1/4" 3/2 lever/pilot side lever	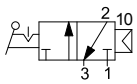	034295	A1MA232LLP

Manual lever operated valves series A1

1/4", 3/2 top lever

Main features

Version	Code	Item	Symbol
3/2 lever/lever detent top lever	034100	A1MA232LT	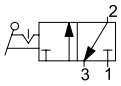



Technical data

Version	3/2 lever/lever detent
Code	034100
Item	A1MA232LT
Size	1/4"
Orifice	8 mm
Configuration	Top lever
Fluid	Compressed air with or without lubrication. Lubrication, if started, must be continued.
Pressure range	0 ÷ 10 bar
Temperature range	-10°C ÷ +80°C (standard) -25°C ÷ +60°C (BT)
Flow at 6 bar with ΔP 1 bar	1.100 Nl/min.
Mounting	In every position

Standard dimensions

Type: **3/2 lever/lever detent**

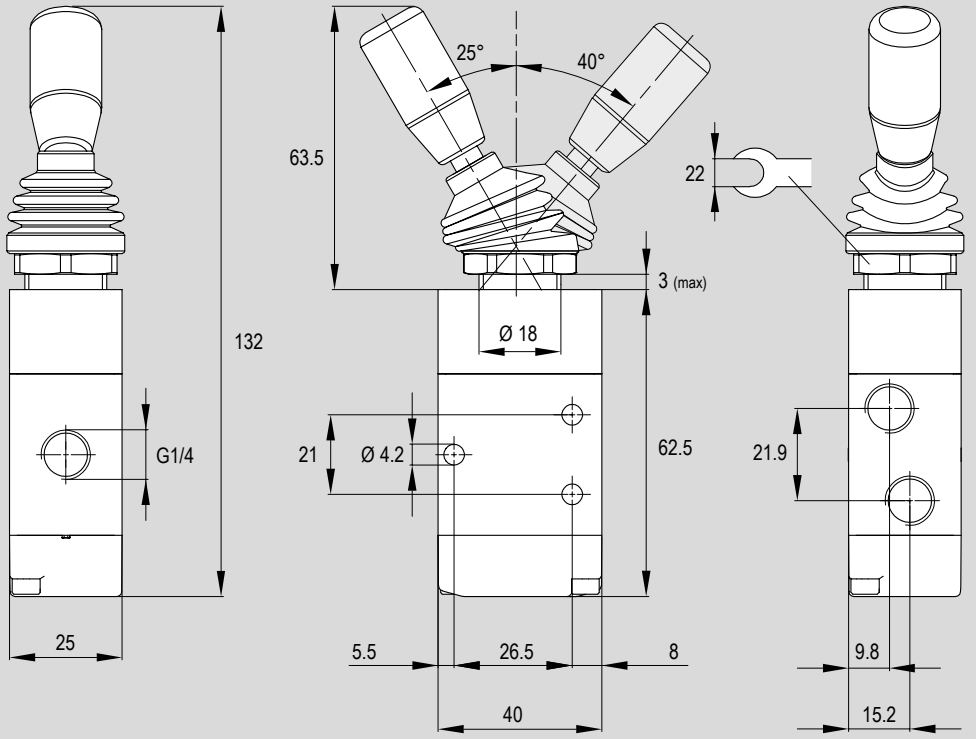

Version	Symbol	Code	Item
1/4" 3/2 lever/lever detent top lever	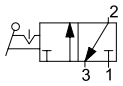	034100	A1MA232LT

Manual lever operated valves series A1

1/4", 3/2 push-pull

Main features

Version	Code	Item	Symbol
3/2 N.C. spring return	034103	A1MA230TT	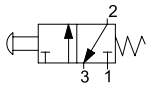
3/2 two positions detent	034104	A1MA232TT	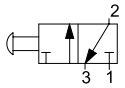
3/2 pilot return	034359	A1MA232TTP	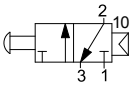



Technical data

Version	3/2 normally closed spring return	3/2 two positions detent	3/2 pilot return
Code	034103	034104	034359
Item	A1MA230TT	A1MA232TT	A1MA232TTP
Size	1/4"		
Orifice	8 mm		
Configuration	Push-pull		
Fluid	Compressed air with or without lubrication. Lubrication, if started, must be continued.		
Pressure range	0 ÷ 10 bar		
Temperature range	-10°C ÷ +80°C (standard) -25°C ÷ +60°C (BT)		
Flow at 6 bar with ΔP 1 bar	1.100 Nl/min.		
Mounting	In every position		

Standard dimensions

Type: **3/2 N.C. spring return**
3/2 two positions detent

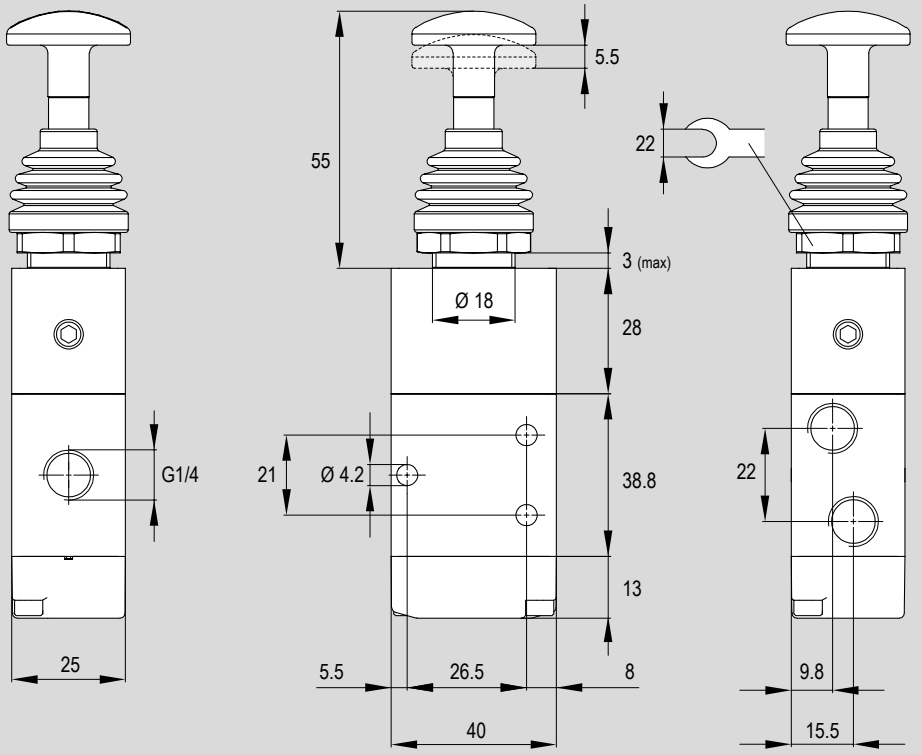

Type: **3/2 pilot return**

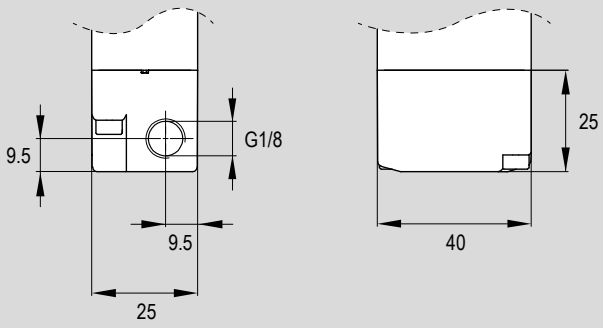

Version	Symbol	Code	Item
1/4" 3/2 normally closed spring return	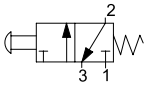	034103	A1MA230TT
1/4" 3/2 two positions detent	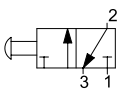	034104	A1MA232TT
1/4" 3/2 pilot return	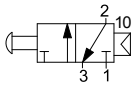	034359	A1MA232TTP

Manual lever operated valves series A1

1/4", 5/2 side lever

Main features

Version	Code	Item	Symbol
5/2 lever/spring side lever	034078	A1MA250LL	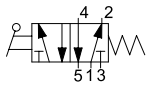
5/2 lever/lever detent side lever	034079	A1MA251LL	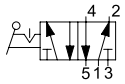
5/2 lever/pilot side lever	034176	A1MA251LLP	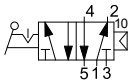



Technical data

Version	5/2 lever/spring	5/2 lever/lever detent	5/2 lever/pilot
Code	034078	034079	034176
Item	A1MA250LL	A1MA251LL	A1MA251LLP
Size	1/4"		
Orifice	8 mm		
Configuration	Side lever		
Fluid	Compressed air with or without lubrication. Lubrication, if started, must be continued.		
Pressure range	0 ÷ 10 bar		
Temperature range	-10°C ÷ +80°C (standard) -25°C ÷ +60°C (BT)		
Flow at 6 bar with ΔP 1 bar	1.100 Nl/min.		
Mounting	In every position		

Standard dimensions

Type: **5/2 lever/spring**
5/2 lever/lever detent

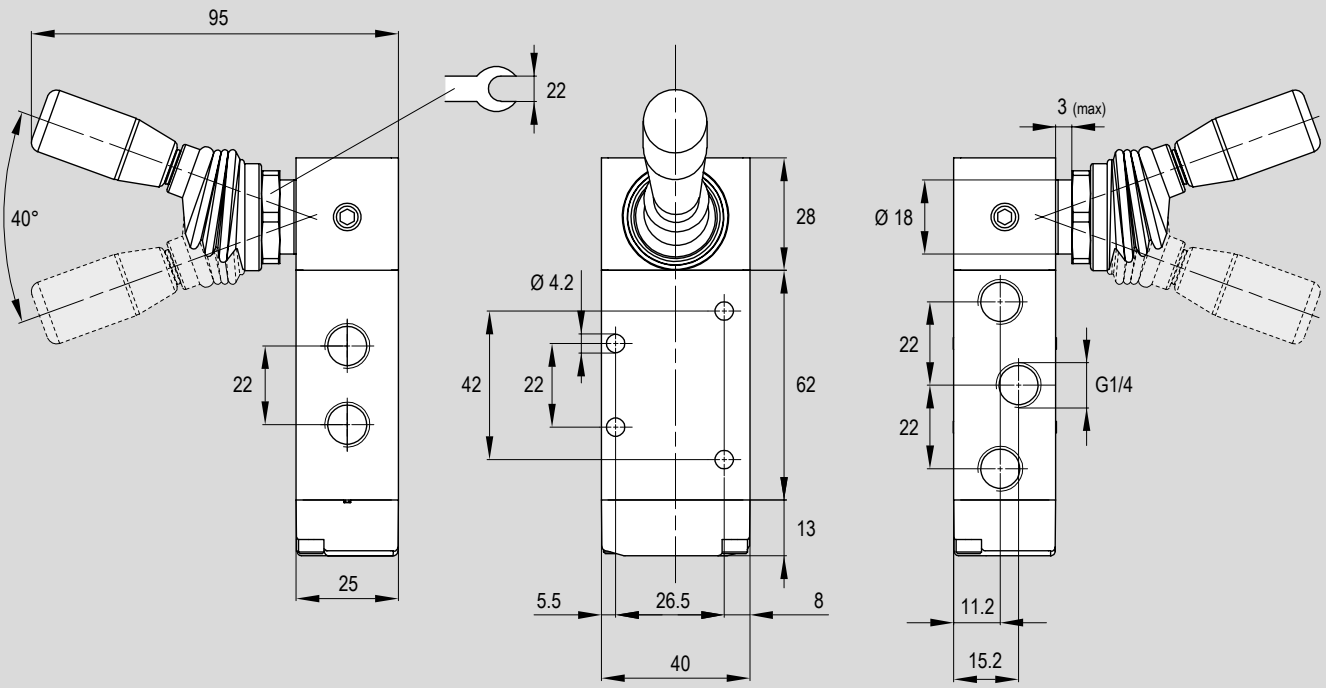

Type: **5/2 lever/pilot**

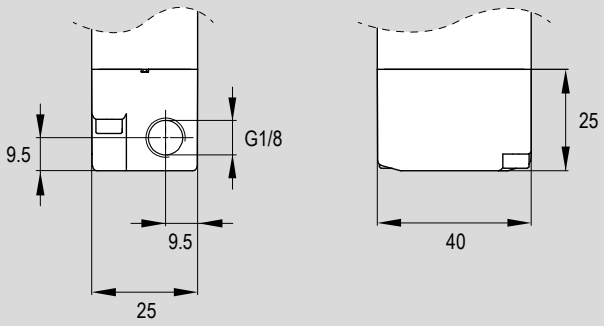

Version	Symbol	Code	Item
1/4" 5/2 lever/spring side lever	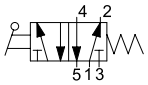	034078	A1MA250LL
1/4" 5/2 lever/lever detent side lever	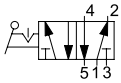	034079	A1MA251LL
1/4" 5/2 lever/pilot side lever	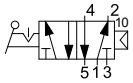	034176	A1MA251LLP

Manual lever operated valves series A1

1/4", 5/2 top lever

Main features

Version	Code	Item	Symbol
5/2 lever/lever detent top lever	034105	A1MA251LT	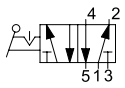



Technical data

Version	5/2 lever/lever detent
Code	034105
Item	A1MA251LT
Size	1/4"
Orifice	8 mm
Configuration	Top lever
Fluid	Compressed air with or without lubrication. Lubrication, if started, must be continued.
Pressure range	0 ÷ 10 bar
Temperature range	-10°C ÷ +80°C (standard) -25°C ÷ +60°C (BT)
Flow at 6 bar with ΔP 1 bar	1.100 Nl/min.
Mounting	In every position

Standard dimensions

Type: **5/2 lever/lever detent**

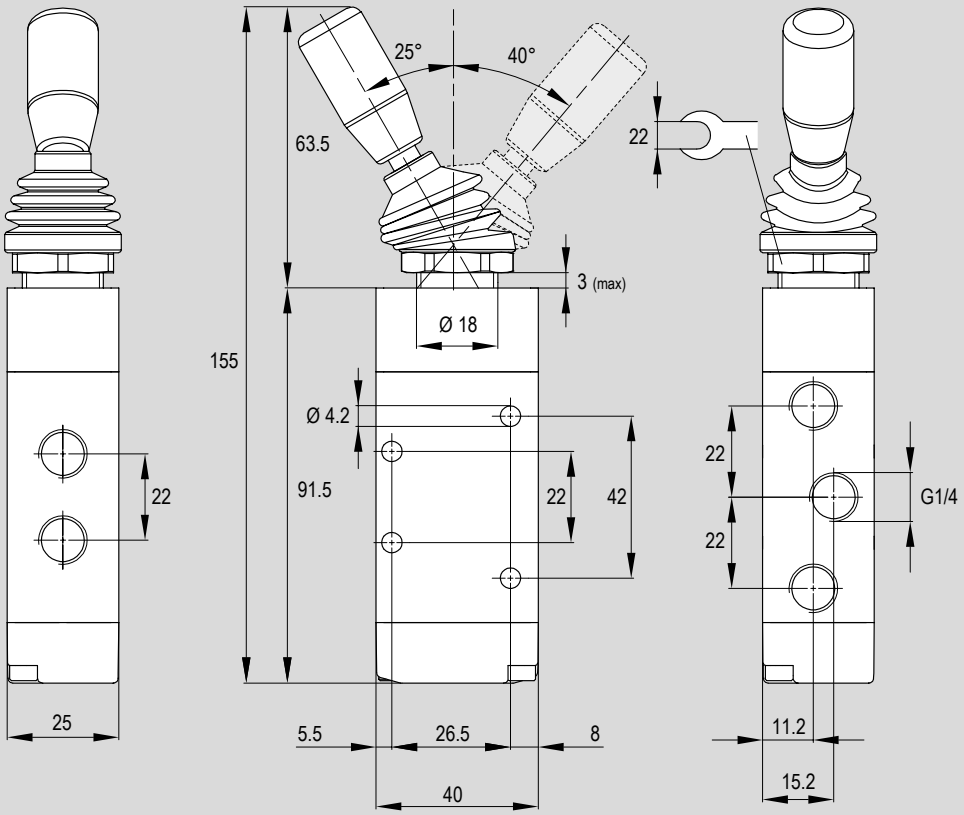

Version	Symbol	Code	Item
1/4" 5/2 lever/lever detent top lever	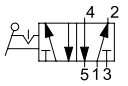	034105	A1MA251LT

Manual lever operated valves series A1

1/4", 5/2 push-pull

Main features

Version	Code	Item	Symbol
5/2 spring return	034106	A1MA250TT	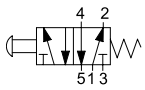
5/2 two positions detent	034107	A1MA251TT	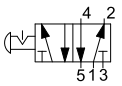
5/2 pilot return	024221	A1MA251TTP	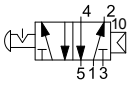



Technical data

Version	5/2 spring return	5/2 two positions detent	5/2 pilot return
Code	034106	034107	024221
Item	A1MA250TT	A1MA251TT	A1MA251TTP
Size	1/4"		
Orifice	8 mm		
Configuration	Push-pull		
Fluid	Compressed air with or without lubrication. Lubrication, if started, must be continued.		
Pressure range	0 ÷ 10 bar		
Temperature range	-10°C ÷ +80°C (standard) -25°C ÷ +60°C (BT)		
Flow at 6 bar with ΔP 1 bar	1.100 Nl/min.		
Mounting	In every position		

Standard dimensions

Type: **5/2 spring return**
5/2 two positions detent

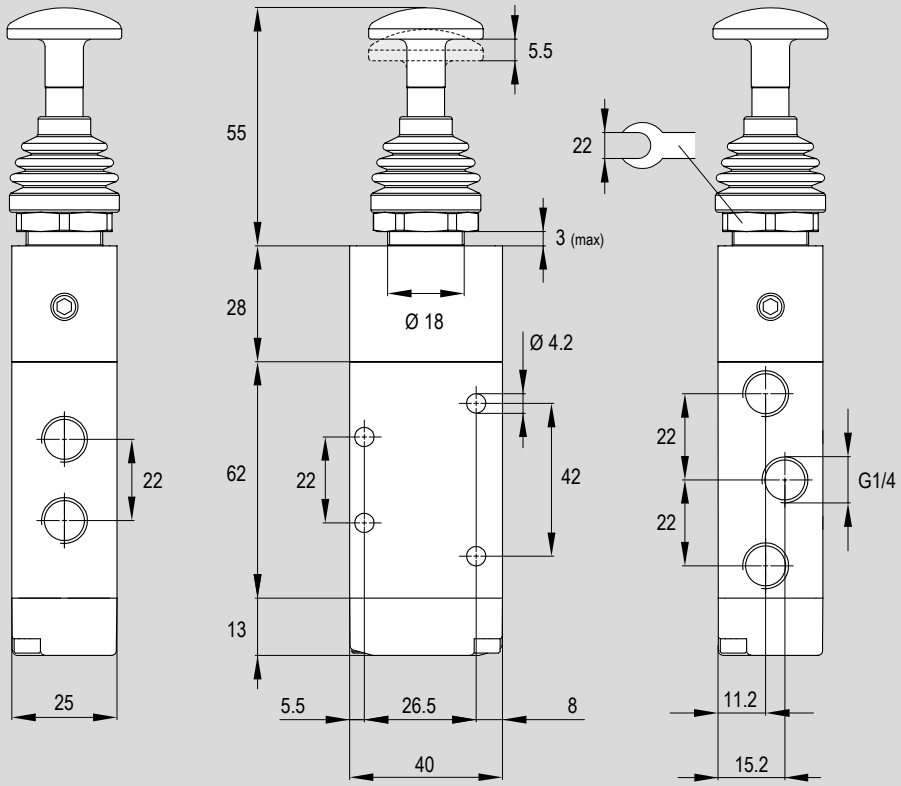

Type: **5/2 pilot return**

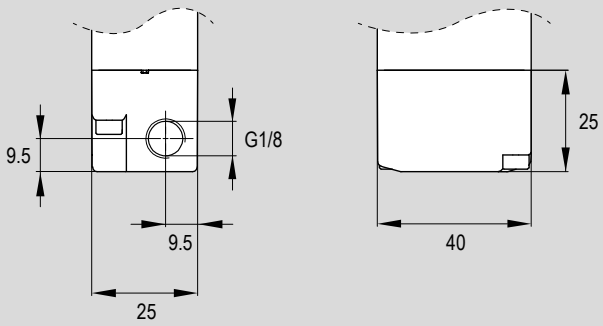

Version	Symbol	Code	Item
1/4" 5/2 spring return	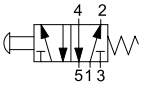	034106	A1MA250TT
1/4" 5/2 two positions detent	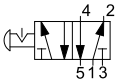	034107	A1MA251TT
1/4" 5/2 pilot return	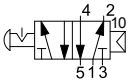	024221	A1MA251TTP

Manual lever operated valves series A1

1/4", 5/3 side lever

Main features

Version	Code	Item	Symbol
5/3 lever/spring C.C. side lever	034072	A1MA270LL	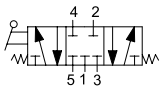
5/3 lever/spring O.C. side lever	034081	A1MA271LL	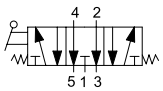
5/3 lever/spring P.C. side lever	034080	A1MA272LL	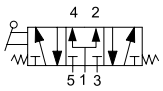
5/3 3 positions detent C.C. side lever	034075	A1MA273LL	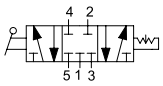
5/3 3 positions detent O.C. side lever	034073	A1MA274LL	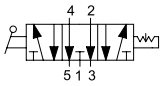
5/3 3 positions detent P.C. side lever	034074	A1MA275LL	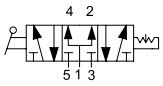





Technical data

Version	5/3 lever/spring closed centres	5/3 lever/spring open centres	5/3 lever/spring pressurized centres	5/3 3 positions detent closed centres	5/3 3 positions detent open centres	5/3 3 positions detent pressurized centres
Code	034072	034081	034080	034075	034073	034074
Item	A1MA270LL	A1MA271LL	A1MA272LL	A1MA273LL	A1MA274LL	A1MA275LL
Size	1/4"					
Orifice	8 mm					
Configuration	Side lever					
Fluid	Compressed air with or without lubrication. Lubrication, if started, must be continued.					
Pressure range	0 ÷ 10 bar					
Temperature range	-10°C ÷ +80°C (standard) -25°C ÷ +60°C (BT)					
Flow at 6 bar with ΔP 1 bar	1.100 Nl/min.					
Mounting	In every position					

Standard dimensions

Type: **5/3 lever/spring C.C.**
5/3 lever/spring O.C.
5/3 lever/spring P.C.

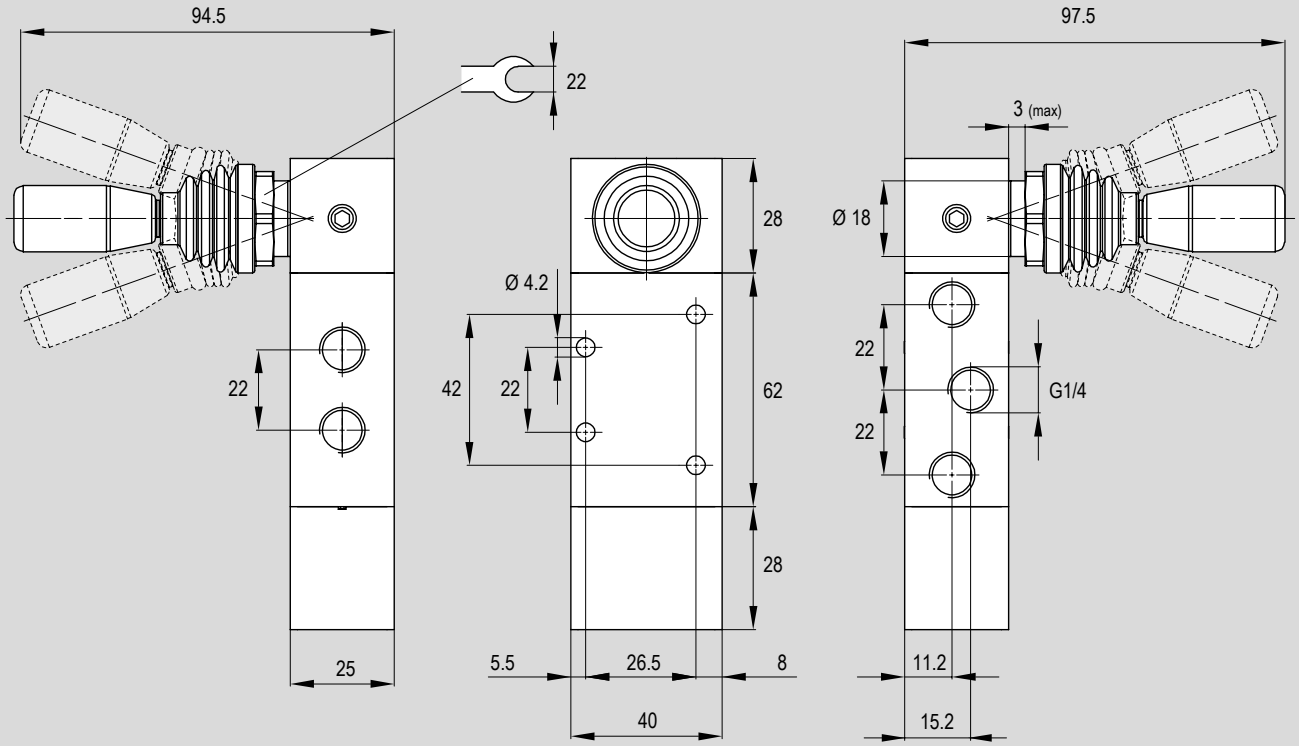

Version	Symbol	Code	Item
1/4" 5/3 lever/spring closed centres side lever	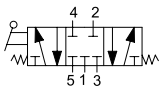	034072	A1MA270LL
1/4" 5/3 lever/spring open centres side lever	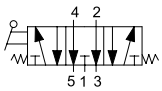	034081	A1MA271LL
1/4" 5/3 lever/spring pressurized centres side lever	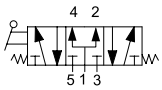	034080	A1MA272LL

Standard dimensions

Type: **5/3 3 positions detent C.C.**
5/3 3 positions detent O.C.
5/3 3 positions detent P.C.

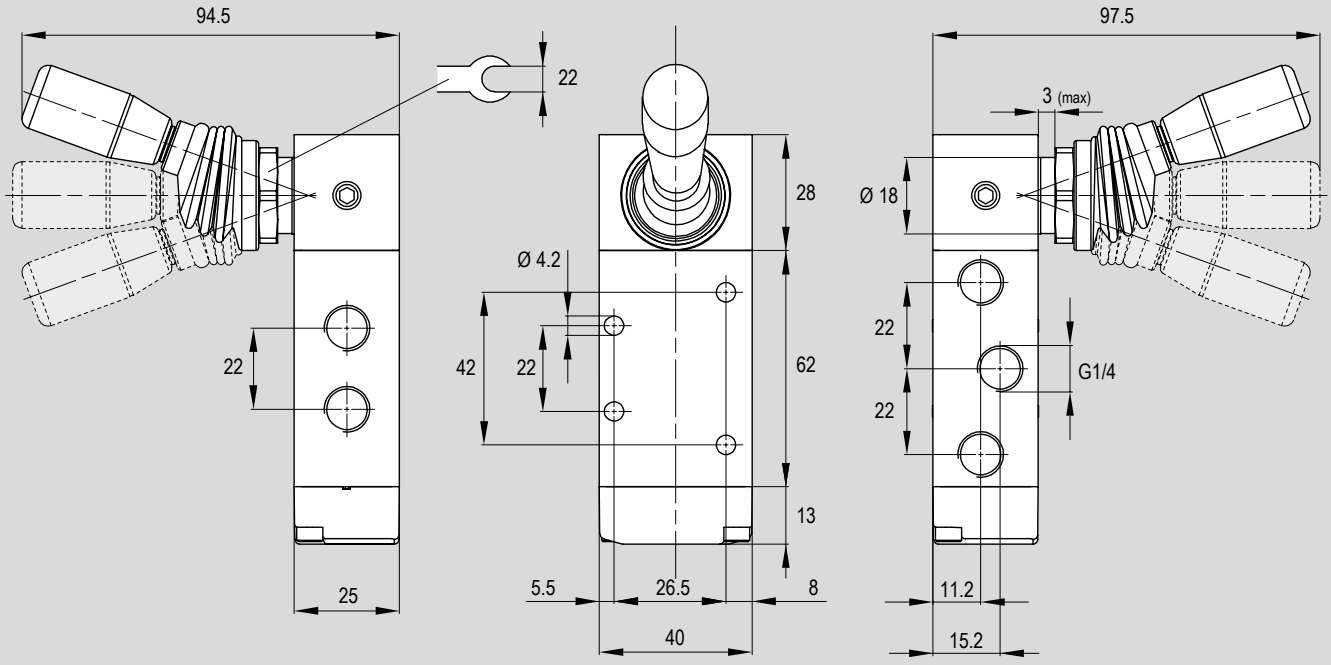

Version	Symbol	Code	Item
1/4" 5/3 3 positions detent closed centres side lever	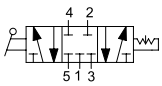	034075	A1MA273LL
1/4" 5/3 3 positions detent open centres side lever	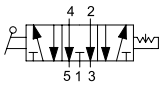	034073	A1MA274LL
1/4" 5/3 3 positions detent pressurized centres side lever	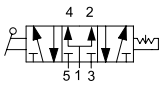	034074	A1MA275LL

Notes

MANUAL

button operated valves Series A1



Find out our
key products

- **Solution for most applications**
- **Easy and intuitive choice**
- **Excellent value for money**
- **Wide availability**
- **Fast delivery**

Features and certifications

Spool valves, with static seals, high flow. Available in size 1/8", manual button operated, spring return with air assist, in many versions, functions and configurations (button, button 90° or selector).
Supplied as standard in compliance to Reach and RoHS directives, and SIL certified.
On request the valve body can be supplied according to 2014/34/EU ATEX Directive, classification Ex h.

Series A1 1/8" 3/2 head push button

from page 2.161.20



Series of spool valves, with static seals, high flow. Available in size 1/8", manual button operated, 3/2 spring return, head push button configuration (available colors: red, green or black), and 3/2 two positions detent, head push button configuration (available colors: red only).

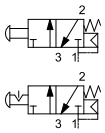

Series A1 1/8" 3/2 90° head push button

from page 2.161.30



Series of spool valves, with static seals, high flow. Available in size 1/8", manual button operated, 3/2 spring return 90° head push button configuration (available colors: red, green or black), and 3/2 two positions detent 90° head push button configuration (available colors: red only).

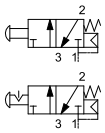

Series A1 1/8" 3/2 recessed button

from page 2.161.50



Series of spool valves, with static seals, high flow. Available in size 1/8", manual button operated, 3/2 spring return recessed button (available colors: red, green or black).

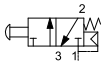

Series A1 1/8" 3/2 90° recessed button

from page 2.161.60



Series of spool valves, with static seals, high flow. Available in size 1/8", manual button operated, 3/2 spring return 90° recessed button configuration (available colors: red, green or black).

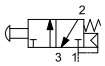

Series A1 1/8" 3/2 90° selector

from page 2.161.80



Series of spool valves, with static seals, high flow. Available in size 1/8", manual button operated, 3/2 two positions detent, 90° selector configuration (available colors: black only).

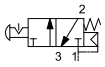

Series A1 1/8" 5/2 head push button

from page 2.161.120



Series of spool valves, with static seals, high flow. Available in size 1/8", manual button operated, 5/2 spring return, head push button configuration (available colors: red, green or black), and 5/2 two positions detent head push button configuration (available colors: red only).

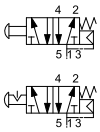

Series A1 1/8" 5/2 90° head push button

from page 2.161.130



Series of spool valves, with static seals, high flow. Available in size 1/8", manual button operated, 5/2 spring return 90° head push button configuration (available colors: red, green or black), and 5/2 two positions detent 90° head push button configuration (available colors: red only).

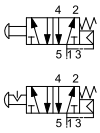

Series A1 1/8" 5/2 recessed button

from page 2.161.150



Series of spool valves, with static seals, high flow. Available in size 1/8", manual button operated, 5/2 spring return recessed button configuration (available colors: red, green or black).

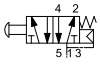

Series A1 1/8" 5/2 90° recessed button

from page 2.161.160



Series of spool valves, with static seals, high flow. Available in size 1/8", manual button operated, 5/2 spring return 90° recessed button configuration (available colors: red, green or black).

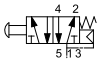

Series A1 1/8" 5/2 90° selector

from page 2.161.180



Series of spool valves, with static seals, high flow. Available in size 1/8", manual button operated, 5/2 two positions detent 90° selector configuration (available colors: black only).

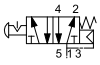

Options

Description		Symbol	Suffix
Low temperatures seals	-25°C ÷ +60°C		**BT**
ATEX valve body*			**/ATEX**
Special versions on request			**/S**

The options, when this is possible, can be combined with each other. For options matching see the table below; For code key see from page 2.160.5

Options matching

Series	Size	Function	Standard options matching	
			BT	**/ATEX**
A1	1/8"	3/2	●	●
		5/2	●	●

Key

● allowed matching; – not allowed matching

Standard materials

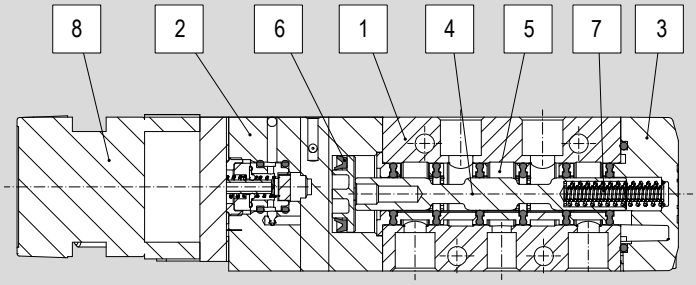

Position	Description	Material
		1/8"
1	Body	Die-cast painted aluminium
2	Front cover	Anodized aluminium
3	Rear cover	Tecnopolymer
4	Spool	Hard anodized aluminium
5	Distancers	Tecnopolymer
6	Seals	HNBR
7	Springs	Spring steel
8	Button/Selector	Plastic

Code key

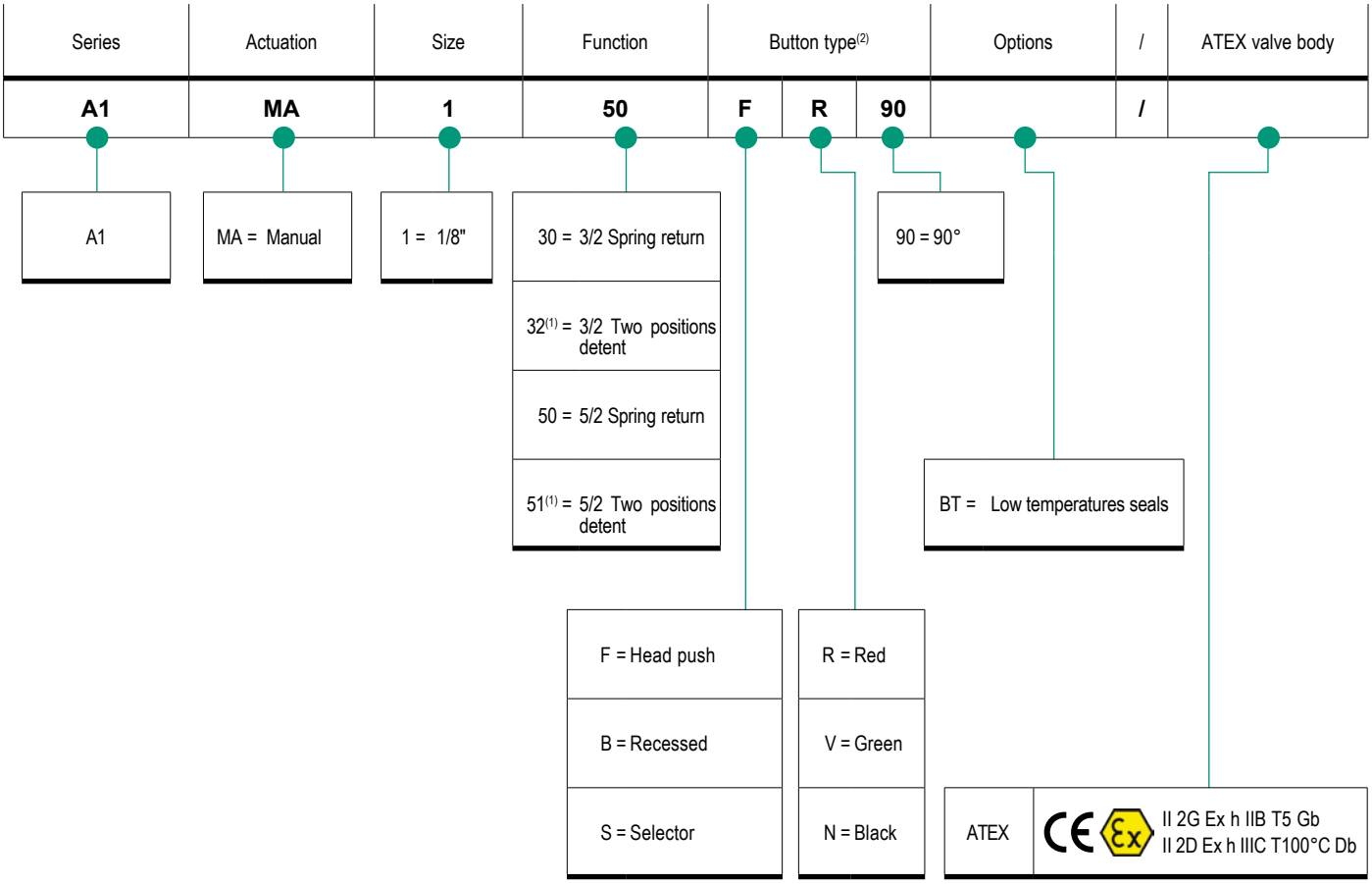

How to order

Series	Actuation	Size	Function	Button type	Option
A1	MA	1	50	FR90	

Notes

Options in the same grid are alternative to each others.

For further information on options and their matching, see page 2.160.4.

(1) 3/2 two positions detent (32) and 5/2 two positions detent (51) available only for congifurations: red head push button (FR), 90° red head push button (FR90) and 90° black selector (SB90).

(2) Selector (S) available only in combination with 90° configuration (90) in black color (N).

For buttons and selectors spare parts, see page 2.185.1

For further information on the ATEX 2014/34/EU Directive, on classifications and protections, see from page III.1

Accessories

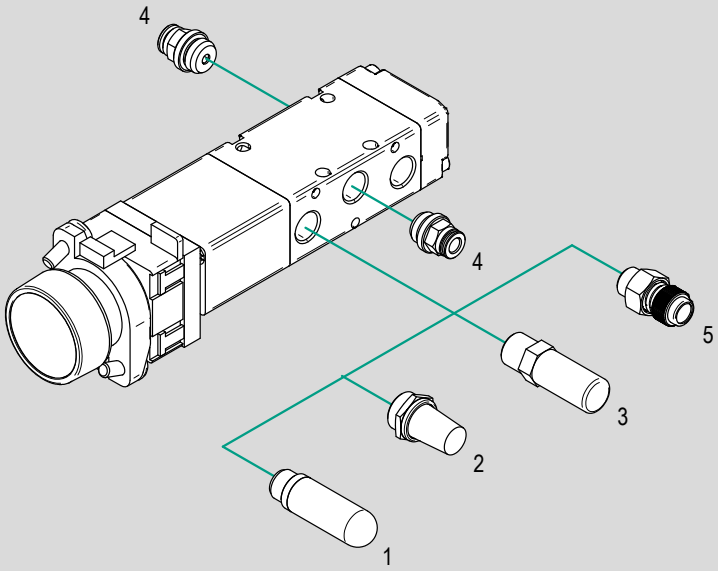

N.	Item	Description	Compliance	Matching	Code key page	Data sheet page
				1/8"		
1	AS..	Plastic silencers	-	●	4.151.10	
	SP..			●	4.151.20	
2	A..	Sintered silencers	-	●	4.153.10	
3	M..	Metal silencers	-	●	4.155.10	
4	R..	Push-in fittings	UNI ISO 228/1 UNI ISO7/1 ISO R/232	●	4.2.1	
5	A..	Silenced exhaust restrictors	-	●	4.97.1	

Key
● matching accessory; – not matching accessory

Manual button operated valves series A1

1/8", 3/2 head push button

Main features

Version	Code	Item	Symbol
3/2 spring return red head push button	034085	A1MA130FR	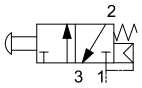
3/2 spring return green head push button	034086	A1MA130FV	
3/2 spring return black head push button	034087	A1MA130FN	
3/2 two positions detent red head push button	034182	A1MA132FR	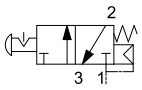



Technical data

Version	3/2 spring return			3/2 two positions detent
Code	034085	034086	034087	034182
Item	A1MA130FR	A1MA130FV	A1MA130FN	A1MA132FR
Size	1/8"			
Orifice	6.5 mm			
Button type	Head push			
Button color	Red	Green	Black	Red
Fluid	Compressed air with or without lubrication. Lubrication, if started, must be continued.			
Pressure range	0 ÷ 10 bar			
Temperature range	-10°C ÷ +80°C (standard) -25°C ÷ +60°C (BT)			
Flow at 6 bar with ΔP 1 bar	650 Nl/min.			
Mounting	In every position			

Standard dimensions

Type: **3/2 spring return**
3/2 two positions detent

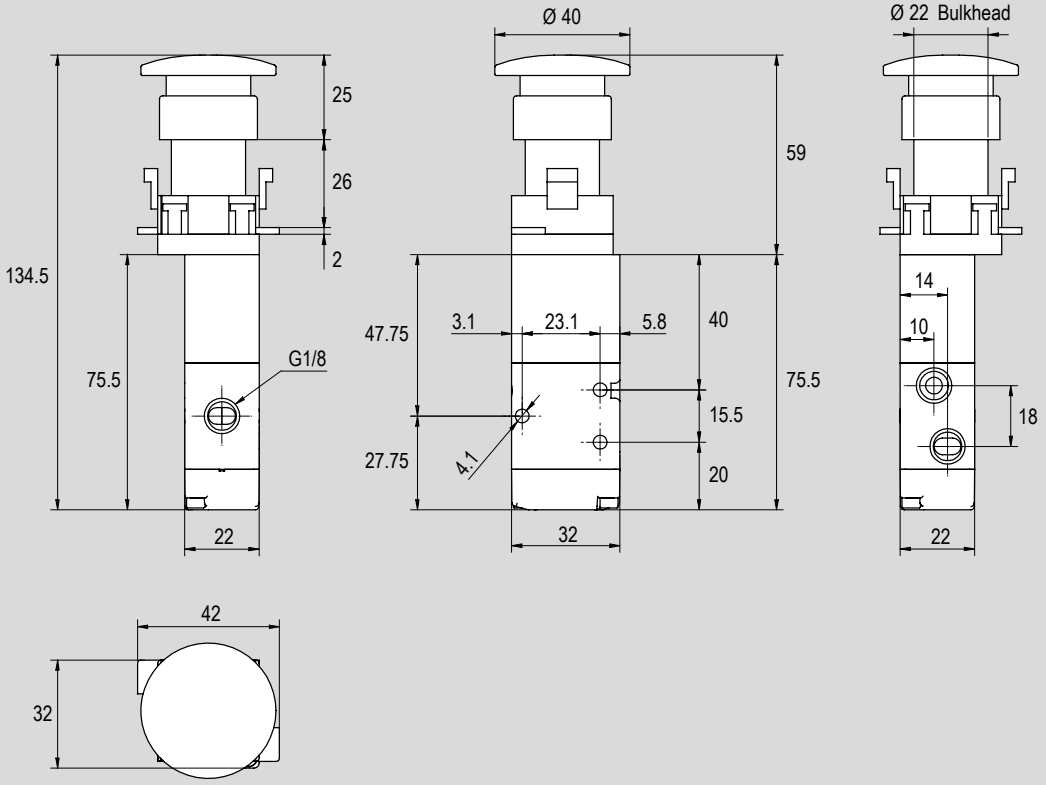

Version	Symbol	Code	Item
1/8" 3/2 spring return red head push button	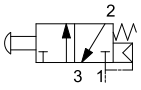	034085	A1MA130FR
1/8" 3/2 spring return green head push button		034086	A1MA130FV
1/8" 3/2 spring return black head push button		034087	A1MA130FN
1/8" 3/2 two positions detent red head push button	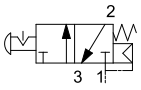	034182	A1MA132FR

Manual button operated valves series A1

1/8", 3/2 90° head push button

Main features

Version	Code	Item	Symbol
3/2 spring return 90° red head push button	036045	A1MA130FR90	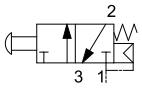
3/2 spring return 90° green head push button	036046	A1MA130FV90	
3/2 spring return 90° black head push button	036047	A1MA130FN90	
3/2 two positions detent 90° red head push button	036048	A1MA132FR90	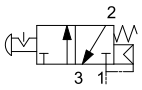

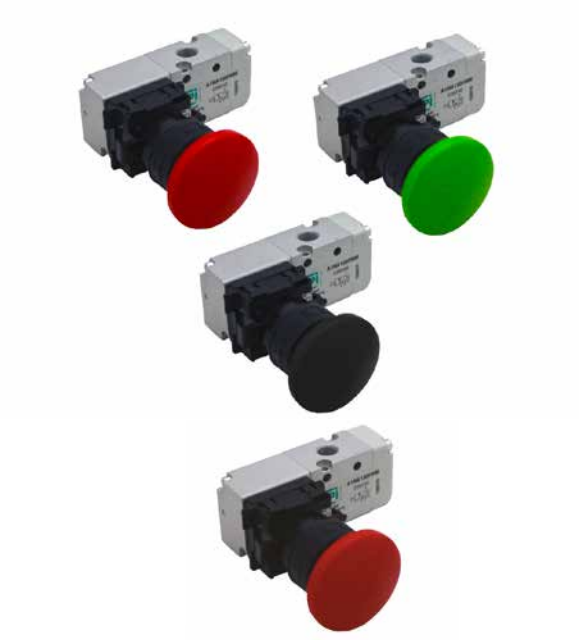

Technical data

Version	3/2 spring return			3/2 two positions detent
Code	036045	036046	036047	036048
Item	A1MA130FR90	A1MA130FV90	A1MA130FN90	A1MA132FR90
Size	1/8"			
Orifice	6.5 mm			
Button type	90° head push			
Button color	Red	Green	Black	Red
Fluid	Compressed air with or without lubrication. Lubrication, if started, must be continued.			
Pressure range	0 ÷ 10 bar			
Temperature range	-10°C ÷ +80°C (standard) -25°C ÷ +60°C (BT)			
Flow at 6 bar with ΔP 1 bar	650 Nl/min.			
Mounting	In every position			

Standard dimensions

Type: **3/2 spring return**
3/2 two positions detent

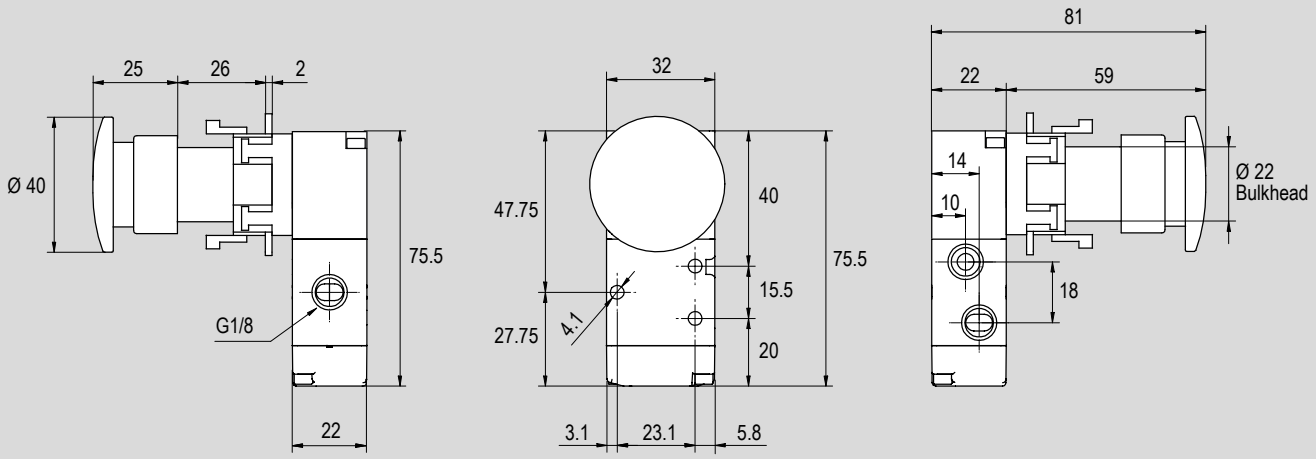

Version	Symbol	Code	Item
1/8" 3/2 spring return 90° red head push button	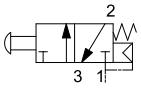	036045	A1MA130FR90
1/8" 3/2 spring return 90° green head push button		036046	A1MA130FV90
1/8" 3/2 spring return 90° black head push button		036047	A1MA130FN90
1/8" 3/2 two positions detent 90° red head push button	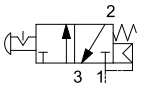	036048	A1MA132FR90

Manual button operated valves series A1

1/8", 3/2 recessed button

Main features

Version	Code	Item	Symbol
3/2 spring return red recessed button	034088	A1MA130BR	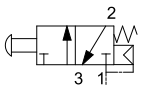
3/2 spring return green recessed button	034089	A1MA130BV	
3/2 spring return black recessed button	034090	A1MA130BN	



Technical data

Version	3/2 spring return		
Code	034088	034089	034090
Item	A1MA130BR	A1MA130BV	A1MA130BN
Size	1/8"		
Orifice	6.5 mm		
Button type	Recessed		
Button color	Red	Green	Black
Fluid	Compressed air with or without lubrication. Lubrication, if started, must be continued.		
Pressure range	0 ÷ 10 bar		
Temperature range	-10°C ÷ +80°C (standard) -25°C ÷ +60°C (BT)		
Flow at 6 bar with ΔP 1 bar	650 Nl/min.		
Mounting	In every position		

Standard dimensions

Type: **3/2 spring return**

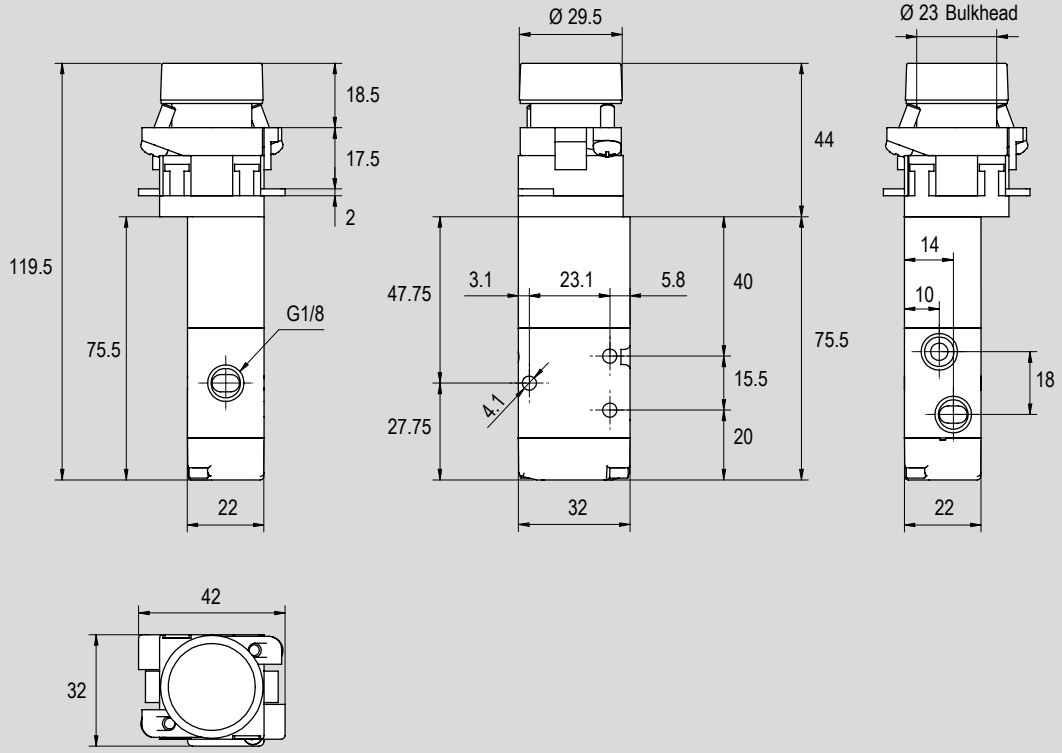

Version	Symbol	Code	Item
1/8" 3/2 spring return red recessed button	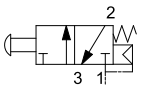	034088	A1MA130BR
1/8" 3/2 spring return green recessed button		034089	A1MA130BV
1/8" 3/2 spring return black recessed button		034090	A1MA130BN

Manual button operated valves series A1

1/8", 3/2 90° recessed button

Main features

Version	Code	Item	Symbol
3/2 spring return 90° red recessed button	036049	A1MA130BR90	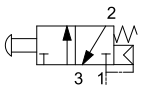
3/2 spring return 90° green recessed button	036050	A1MA130BV90	
3/2 spring return 90° black recessed button	036051	A1MA130BN90	



Technical data

Version	3/2 spring return		
Code	036049	036050	036051
Item	A1MA130BR90	A1MA130BV90	A1MA130BN90
Size	1/8"		
Orifice	6.5 mm		
Button type	90° recessed		
Button color	Red	Green	Black
Fluid	Compressed air with or without lubrication. Lubrication, if started, must be continued.		
Pressure range	0 ÷ 10 bar		
Temperature range	-10°C ÷ +80°C (standard) -25°C ÷ +60°C (BT)		
Flow at 6 bar with ΔP 1 bar	650 Nl/min.		
Mounting	In every position		

Standard dimensions

Type: **3/2 spring return**

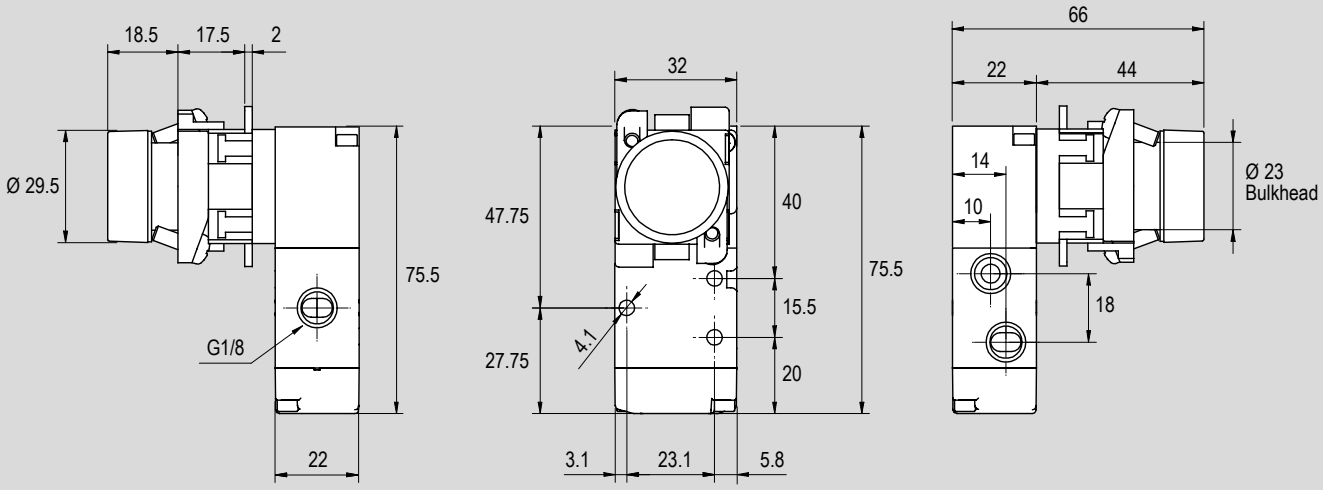

Version	Symbol	Code	Item
1/8" 3/2 spring return 90° red recessed button	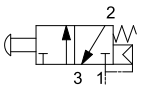	036049	A1MA130BR90
1/8" 3/2 spring return 90° green recessed button		036050	A1MA130BV90
1/8" 3/2 spring return 90° black recessed button		036051	A1MA130BN90

Manual button operated valves series A1

1/8", 3/2 90° selector

Main features

Version	Code	Item	Symbol
3/2 two positions detent 90° black selector	036052	A1MA132SB90	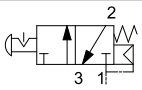



Technical data

Version	3/2 two positions detent
Code	036052
Item	A1MA132SB90
Size	1/8"
Orifice	6.5 mm
Button type	90° black selector
Button color	Black
Fluid	Compressed air with or without lubrication. Lubrication, if started, must be continued.
Pressure range	0 ÷ 10 bar
Temperature range	-10°C ÷ +80°C (standard) -25°C ÷ +60°C (BT)
Flow at 6 bar with ΔP 1 bar	650 Nl/min.
Mounting	In every position

Standard dimensions

Type: **3/2 two positions detent**

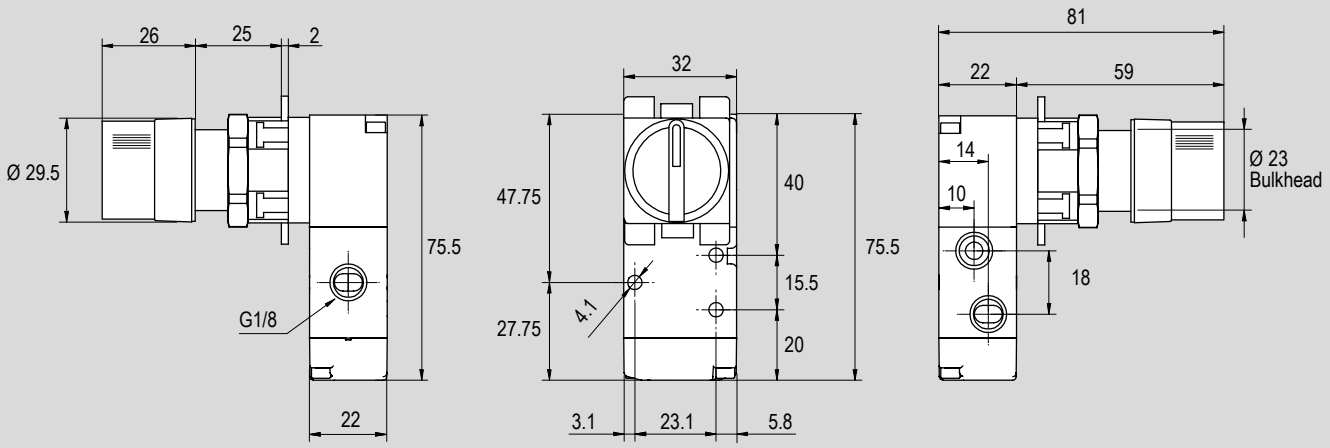

Version	Symbol	Code	Item
1/8" 3/2 two positions detent 90° black selector	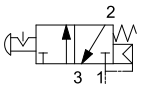	036052	A1MA132SB90

Manual button operated valves series A1

1/8", 5/2 head push button

Main features

Version	Code	Item	Symbol
5/2 spring return red head push button	034094	A1MA150FR	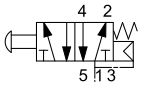
5/2 spring return green head push button	034095	A1MA150FV	
5/2 spring return black head push button	034096	A1MA150FN	
5/2 two positions detent red head push button	034183	A1MA151FR	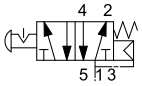



Technical data

Version	5/2 spring return			5/2 two positions detent
Code	034094	034095	034096	034183
Item	A1MA150FR	A1MA150FV	A1MA150FN	A1MA151FR
Size	1/8"			
Orifice	6.5 mm			
Button type	Head push			
Button color	Red	Green	Black	Red
Fluid	Compressed air with or without lubrication. Lubrication, if started, must be continued.			
Pressure range	0 ÷ 10 bar			
Temperature range	-10°C ÷ +80°C (standard) -25°C ÷ +60°C (BT)			
Flow at 6 bar with ΔP 1 bar	650 Nl/min.			
Mounting	In every position			

Standard dimensions

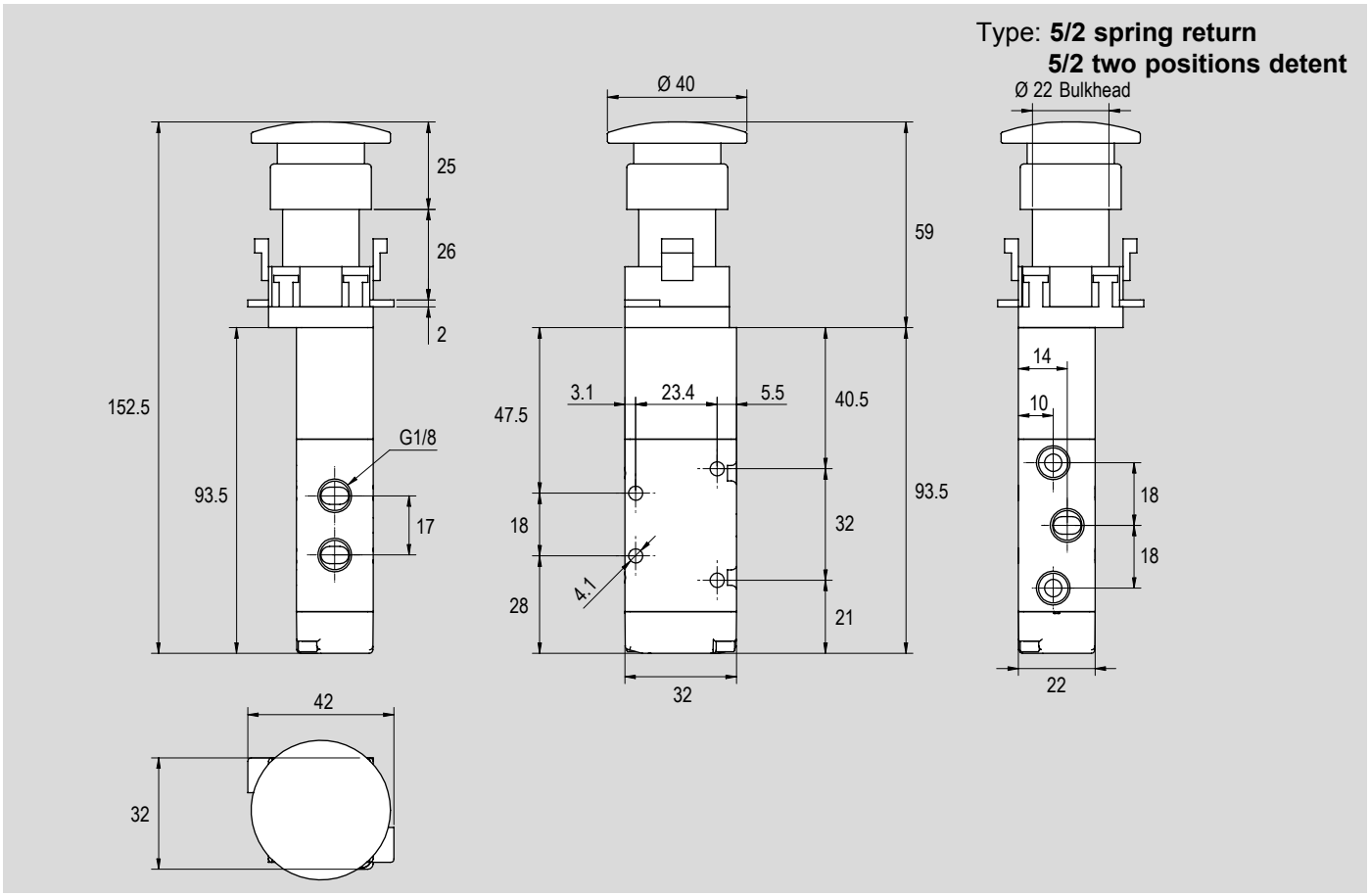

Version	Symbol	Code	Item
1/8" 5/2 spring return red head push button	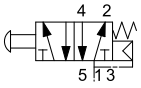	034094	A1MA150FR
1/8" 5/2 spring return green head push button		034095	A1MA150FV
1/8" 5/2 spring return black head push button		034096	A1MA150FN
1/8" 5/2 two positions detent red head push button	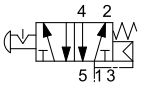	034183	A1MA151FR

Manual button operated valves series A1

1/8", 5/2 90° head push button

Main features

Version	Code	Item	Symbol
5/2 spring return 90° red head push button	036053	A1MA150FR90	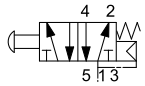
5/2 spring return 90° green head push button	036054	A1MA150FV90	
5/2 spring return 90° black head push button	036055	A1MA150FN90	
5/2 two positions detent 90° red head push button	036057	A1MA151FR90	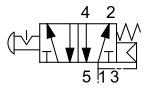



Technical data

Version	5/2 spring return			5/2 two positions detent
Code	036053	036054	036055	036057
Item	A1MA150FR90	A1MA150FV90	A1MA150FN90	A1MA151FR90
Size	1/8"			
Orifice	6.5 mm			
Button type	90° head push			
Button color	Red	Green	Black	Red
Fluid	Compressed air with or without lubrication. Lubrication, if started, must be continued.			
Pressure range	0 ÷ 10 bar			
Temperature range	-10°C ÷ +80°C (standard) -25°C ÷ +60°C (BT)			
Flow at 6 bar with ΔP 1 bar	650 Nl/min.			
Mounting	In every position			

Standard dimensions

Type: **5/2 spring return**
5/2 two positions detent

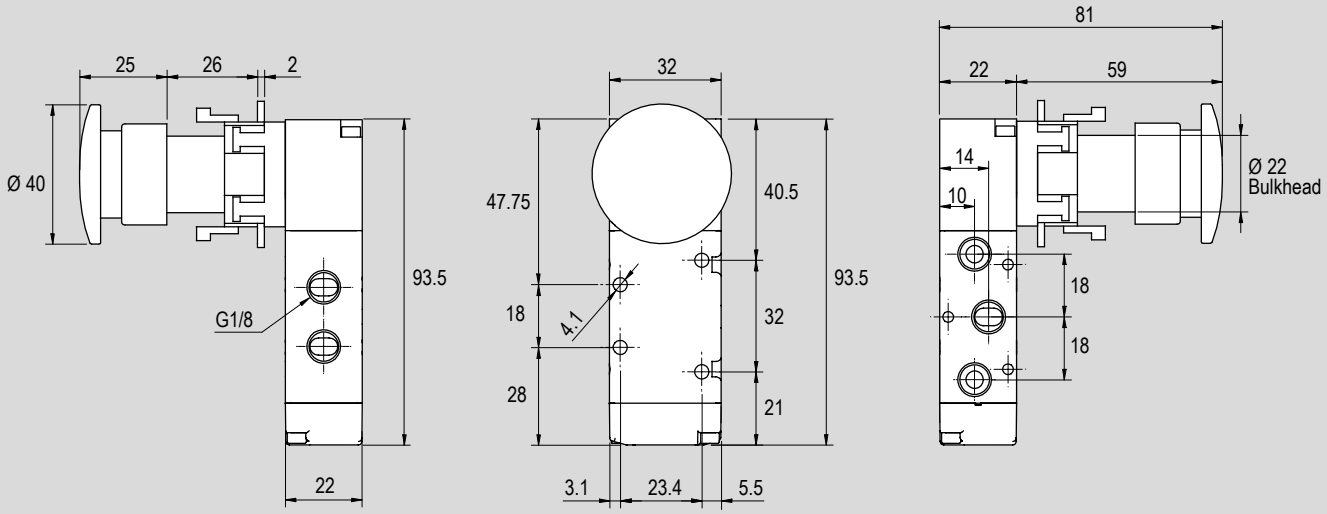

Version	Symbol	Code	Item
1/8" 5/2 spring return 90° red head push button	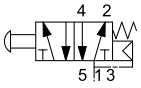	036053	A1MA150FR90
1/8" 5/2 spring return 90° green head push button		036054	A1MA150FV90
1/8" 5/2 spring return 90° black head push button		036055	A1MA150FN90
1/8" 5/2 two positions detent 90° red head push button	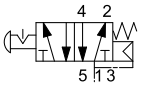	036057	A1MA151FR90

Manual button operated valves series A1

1/8", 5/2 recessed button

Main features

Version	Code	Item	Symbol
5/2 spring return red recessed button	034097	A1MA150BR	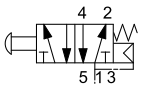
5/2 spring return green recessed button	034098	A1MA150BV	
5/2 spring return black recessed button	034099	A1MA150BN	



Technical data

Version	5/2 spring return		
Code	034097	034098	034099
Item	A1MA150BR	A1MA150BV	A1MA150BN
Size	1/8"		
Orifice	6.5 mm		
Button type	Recessed		
Button color	Red	Green	Black
Fluid	Compressed air with or without lubrication. Lubrication, if started, must be continued.		
Pressure range	0 ÷ 10 bar		
Temperature range	-10°C ÷ +80°C (standard) -25°C ÷ +60°C (BT)		
Flow at 6 bar with ΔP 1 bar	650 Nl/min.		
Mounting	In every position		

Standard dimensions

Type: **5/2 spring return**

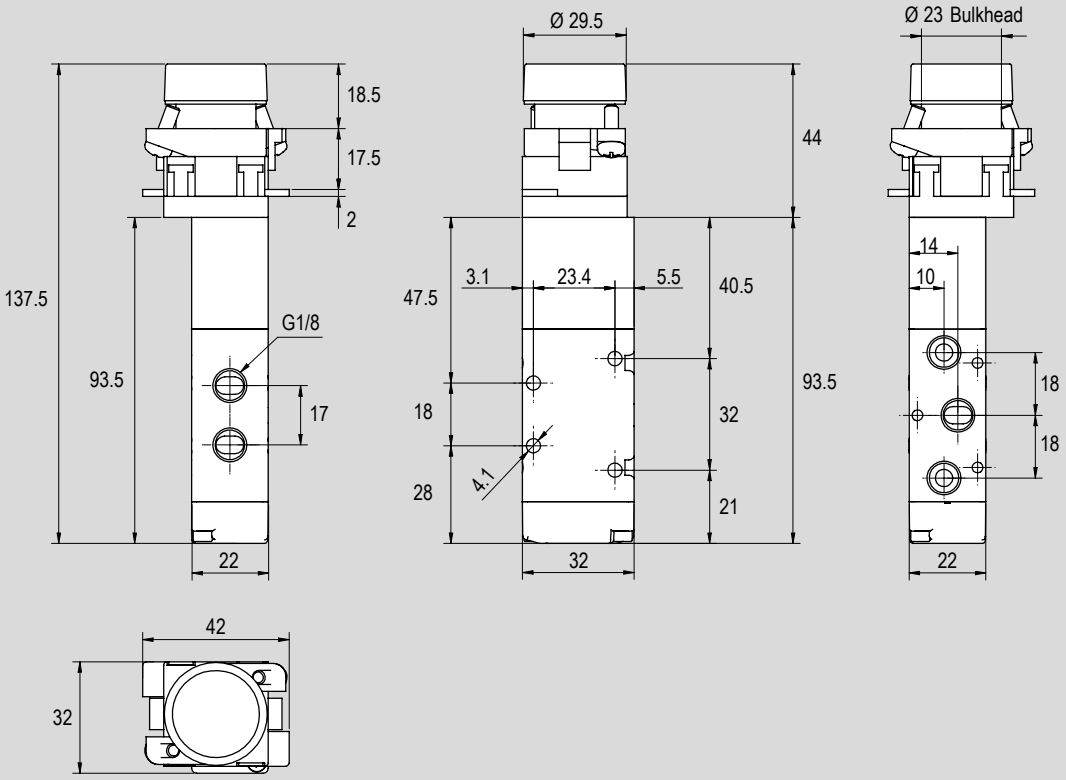

Version	Symbol	Code	Item
1/8" 5/2 spring return red recessed button	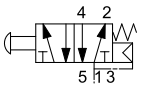	034097	A1MA150BR
1/8" 5/2 spring return green recessed button		034098	A1MA150BV
1/8" 5/2 spring return black recessed button		034099	A1MA150BN

Manual button operated valves series A1

1/8", 5/2 90° recessed button

Main features

Version	Code	Item	Symbol
5/2 spring return 90° red recessed button	036058	A1MA150BR90	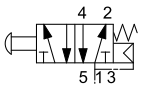
5/2 spring return 90° green recessed button	036059	A1MA150BV90	
5/2 spring return 90° black recessed button	036060	A1MA150BN90	



Technical data

Version	5/2 spring return		
Code	036058	036059	036060
Item	A1MA150BR90	A1MA150BV90	A1MA150BN90
Size	1/8"		
Orifice	6.5 mm		
Button type	90° recessed		
Button color	Red	Green	Black
Fluid	Compressed air with or without lubrication. Lubrication, if started, must be continued.		
Pressure range	0 ÷ 10 bar		
Temperature range	-10°C ÷ +80°C (standard) -25°C ÷ +60°C (BT)		
Flow at 6 bar with ΔP 1 bar	650 Nl/min.		
Mounting	In every position		

Standard dimensions

Type: **5/2 spring return**

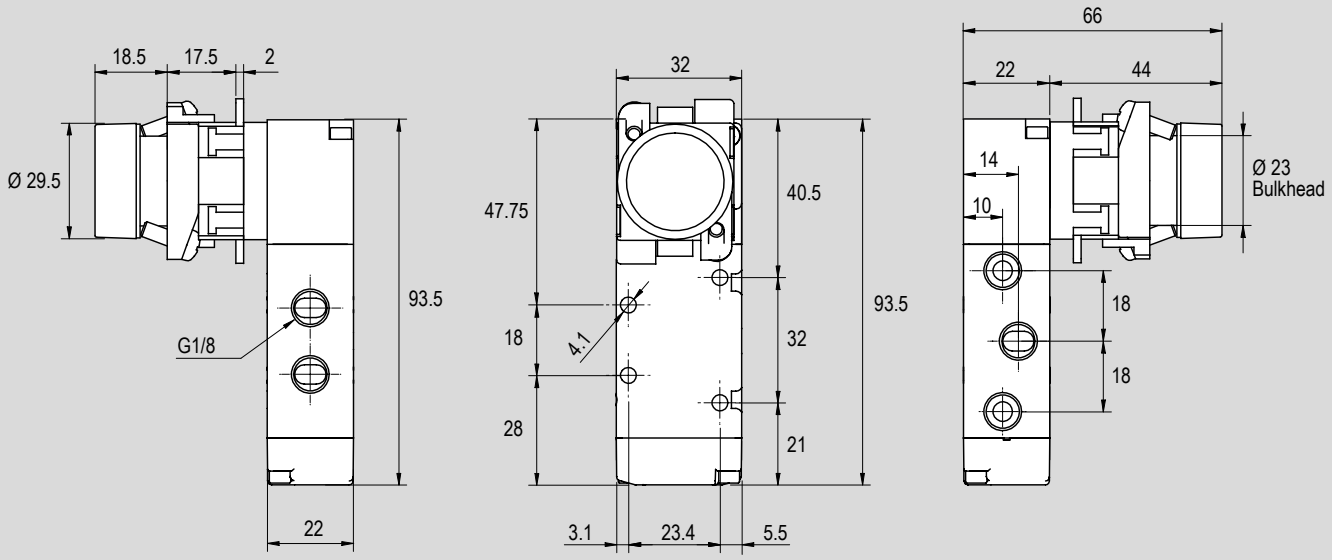

Version	Symbol	Code	Item
1/8" 5/2 spring return 90° red recessed button	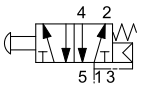	036058	A1MA150BR90
1/8" 5/2 spring return 90° green recessed button		036059	A1MA150BV90
1/8" 5/2 spring return 90° black recessed button		036060	A1MA150BN90

Manual button operated valves series A1
1/8", 5/2 90° selector

Main features

Version	Code	Item	Symbol
5/2 two positions detent 90° black selector	036061	A1MA151SB90	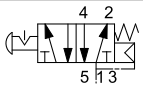



Technical data

Version	5/2 two positions detent
Code	036061
Item	A1MA151SB90
Size	1/8"
Orifice	6.5 mm
Button type	90° black selector
Button color	Black
Fluid	Compressed air with or without lubrication. Lubrication, if started, must be continued.
Pressure range	0 ÷ 10 bar
Temperature range	-10°C ÷ +80°C (standard) -25°C ÷ +60°C (BT)
Flow at 6 bar with ΔP 1 bar	650 Nl/min.
Mounting	In every position

Standard dimensions

Type: **5/2 two positions detent**

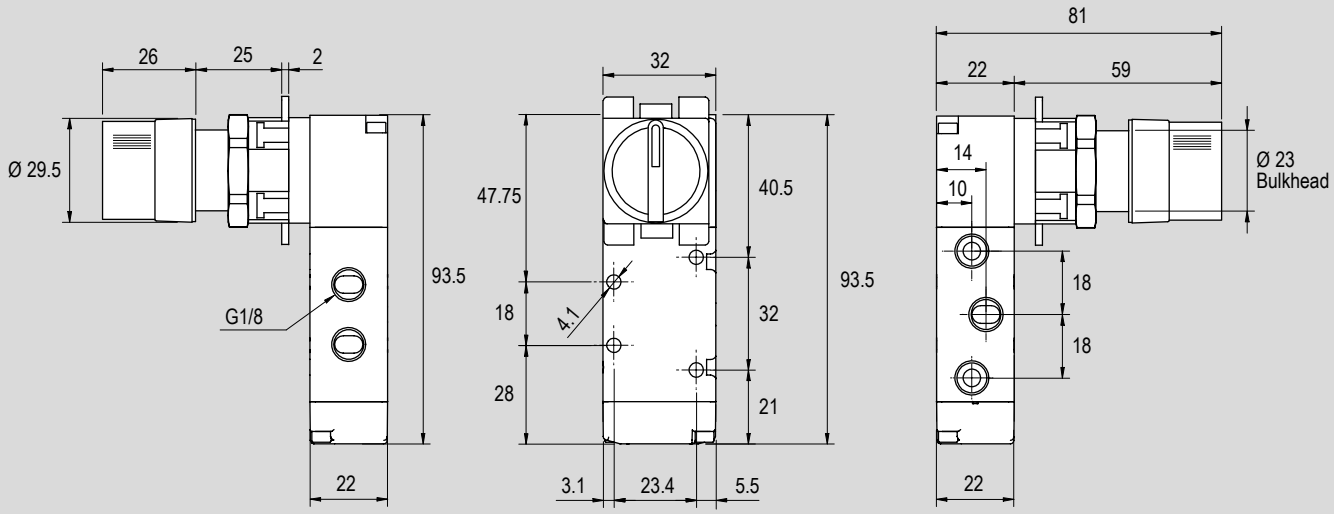

Version	Symbol	Code	Item
1/8" 5/2 two positions detent 90° black selector	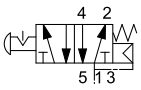	036061	A1MA151SB90

FOOT
operated valves



Find out our
key products

- **Solution for most applications**
- **Easy and intuitive choice**
- **Excellent value for money**
- **Wide availability**
- **Fast delivery**

Features and certifications

Foot operated valves avaliable in size 1/4", 3/2 or 5/2, spring return or two positions detent. Provided as standard with spool valve and yellow shock-resistant protection in acetal resin, and safety device to avoid improper actuation.
Supplied as standard in compliance to Reach and RoHS directives.

Series AVP 1/4" 3/2

from page 2.170.20



Series of spool valves foot operated availabe in size 1/4", 3/2 normally closed, spring return or two positions detent, with safety device.

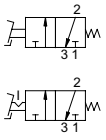

Series AVP 1/4" 5/2

from page 2.170.20



Series of spool valves foot operated availabe in size 1/4", 5/2, spring return or two positions detent, with safety device.

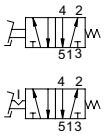

Code key

Series	Size	Function
AVP	**2**	**50**

Series	Size	Function
AVP	2 = 1/4"	30 = 3/2 Normally closed spring return with safety device
		32 = 3/2 Normally closed two positions detent with safety device
		50 = 5/2 Spring return with safety device
		51 = 5/2 Two positions detent with safety device

How to order

Series	Size	Function
AVP	**2**	**50**

Notes

Options in the same grid are alternative to each others.

For standard materials see the product data sheed.

Foot operated valves
1/4", 3/2 N.C. and 5/2

Main features

Version	Code	Item	Symbol
3/2 N.C. spring return with safety device	033127	AVP230	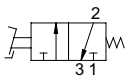
3/2 N.C. two positions detent with safety device	033128	AVP232	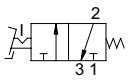
5/2 spring return with safety device	033129	AVP250	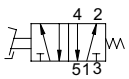
5/2 two positions detent with safety device	033133	AVP251	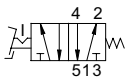



Technical data

Version	3/2 N.C. spring return with safety device	3/2 N.C. two positions detent with safety device	5/2 spring return with safety device	5/2 two positions detent with safety device
Code	033127	033128	033129	033133
Item	AVP230	AVP232	AVP250	AVP251
Fluid	Filtered compressed air with or without lubrication. Lubrication, if started, must be continued.			
Actuation	Foot operated			
Ports	1/4"			
Pressure range	2,5 ÷ 10 bar			
Temperature range	0°C ÷ +50°C			
Orifice	6.5 mm			
Flow	1.000 Nl/min.			

Standard materials

Description	Material
Housing	Shock-resistant acetal resin
Body	Profiled anodized aluminium
Valve internal parts	Nickel-plated brass / Nickel-plated aluminium / Stainless Steel
Seals	NBR
Protection cover	Shock-resistant acetal resin

Standard dimensions

Type: **AVP**

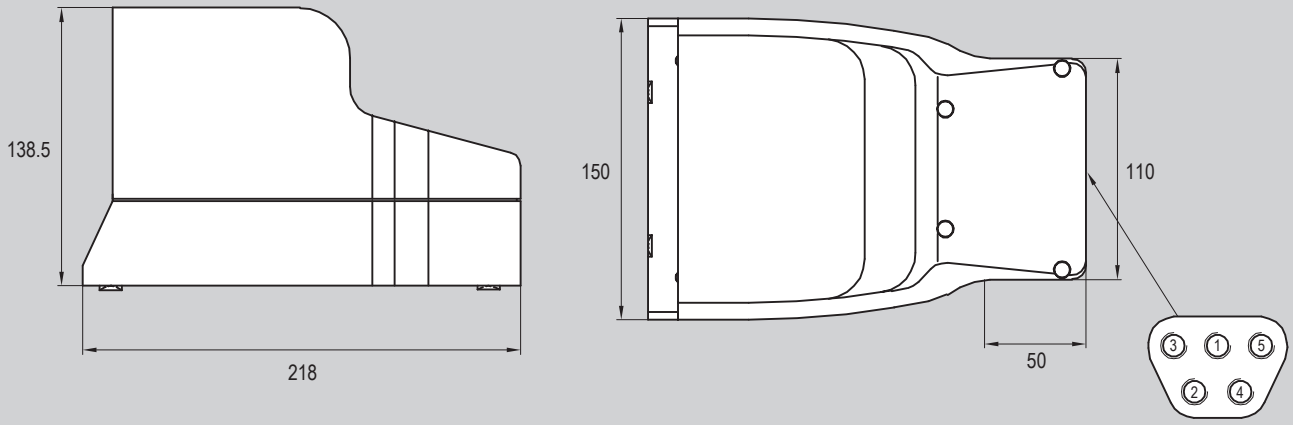

Version	Symbol	Code	Item
1/4" 3/2 N.C. spring return with safety device	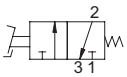	033127	AVP230
1/4" 3/2 N.C. two positions detent with safety device	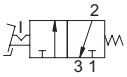	033128	AVP232
1/4" 5/2 spring return with safety device	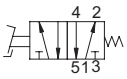	033129	AVP250
1/4" 5/2 two positions detent with safety device	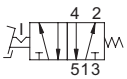	033133	AVP251

Notes

MICROVALVES Ø 4

and manual operating devices



Find out our
key products

- **Solution for most applications**
- **Easy and intuitive choice**
- **Excellent value for money**
- **Wide availability**
- **Fast delivery**

Features and certifications

Microvalves and manual operating devices.
Poppet microvalves Ø 4 mm arranged for application of manual operators. Connections with push-in fittings integrated for tube with external diameter 4 mm. According to the application, you can choose between the bottom connections and the side connections version. Supplied as standard in compliance to Reach and RoHS directives.
Manual operating devices available in many shapes, colors, configurations and functions. Supplied as standard in compliance to Reach and RoHS directives, as well.

RoHS

REACH compliant

Series AM Ø 4 3/2

from page 2.181.20



Series of microvalves Ø 4 mm, 3/2 normally open and 3/2 normally closed, arranged for application of manual operators. Available with bottom or side connections.

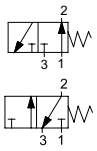

Series AM Ø 4 5/2

from page 2.181.50



Series of microvalves Ø 4 mm, 5/2 spring return, arranged for application of manual operators. Available with bottom or side connections.

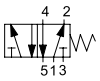

Series AP1..

from page 2.185.10



Series of manual operating devices with recessed button. Available spring return, in red, green or black.



Series AP2..

from page 2.185.20



Series of manual operating devices with head push button. Available spring return, in red, green or black, and two positions detent "twist and release", only in red.

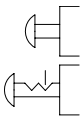

Series AP3..

from page 2.185.50



Manual selector. Availabe only in black, with function two and three positions detent.

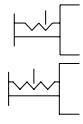

Series AP4..

from page 2.185.60



Key selector. Availabe only in black, with function two positions detent.



Series AP5..

from page 2.185.80



Lever. Availabe only in black, with function three positions detent.



Options microvalves Ø 4

Description	Symbol	Suffix
Side connections		**L**
Special versions on request		**/S**

The options, when this is possible, can be combined with each other. For options matching see the table below; For code key see from page 2.180.4

Options matching microvalves Ø 4

Series	Size	Function	Standard options matching
			L
AM	Ø 4	3/2 Normally Open	●
		3/2 Normally Closed	●
		5/2 Spring return	●

Key
● allowed matching; – not allowed matching

Standard materials microvalves Ø 4

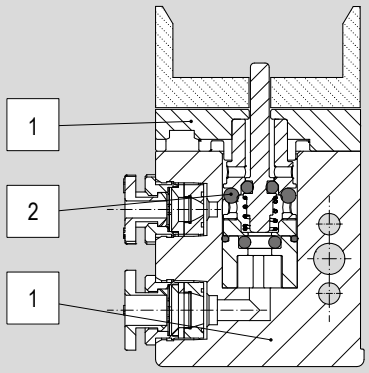

Position	Description	Material
		Ø 4
1	Body	Acetal resin
2	Seals	NBR

Code key microvalves Ø 4

Series	Size	Function	Ports
AM	**04**	**132C**	**L**
AM	04 = Ø 4	132A = 3/2 Normally Open	= Bottom
		132C = 3/2 Normally Closed	L = Side
		1520 = 5/2 Spring return	

How to order

Series	Size	Function	Ports
AM	**04**	**132C**	**L**

Notes

Options in the same grid are alternative to each others.

For further information on options and their matching, see page 2.180.3

For selecting the device for the microvalve, see page 2.180.5

Matching microvalve Ø4 / manual operating device

Microvalve Ø4			3/2 N.O. AM04132A	3/2 N.C. AM04132C	3/2 N.O. AM04132AL	3/2 N.C. AM04132CL	5/2 Spring return AM041520	5/2 Spring return AM041520L	Data sheet & code key page
									
Manual operating device									
Red recessed button spring return AP11R			•	•	•	•	•	•	2.185.10
Green recessed button spring return AP11V			•	•	•	•	•	•	
Black recessed button spring return AP11N			•	•	•	•	•	•	
Red head push button spring return AP21R			•	•	•	•	•	•	2.185.20
Green head push button spring return AP21V			•	•	•	•	•	•	
Black head push button spring return AP21N			•	•	•	•	•	•	
Red head push button two positions detent "twist and release" AP22R			•	•	•	•	•	•	
Black manual selector two positions detent AP32N			•	•	•	•	•	•	2.185.50
Black manual selector 3 positions detent AP33N			-	-	-	-	•	•	
Black key selector two positions detent AP42C			•	•	•	•	•	•	2.185.60
Black Lever 3 positions detent AP53N			-	-	-	-	•	•	2.185.80

Key

● allowed matching; - not allowed matching;

Microvalve with manual operating device mounted* overall dimensions

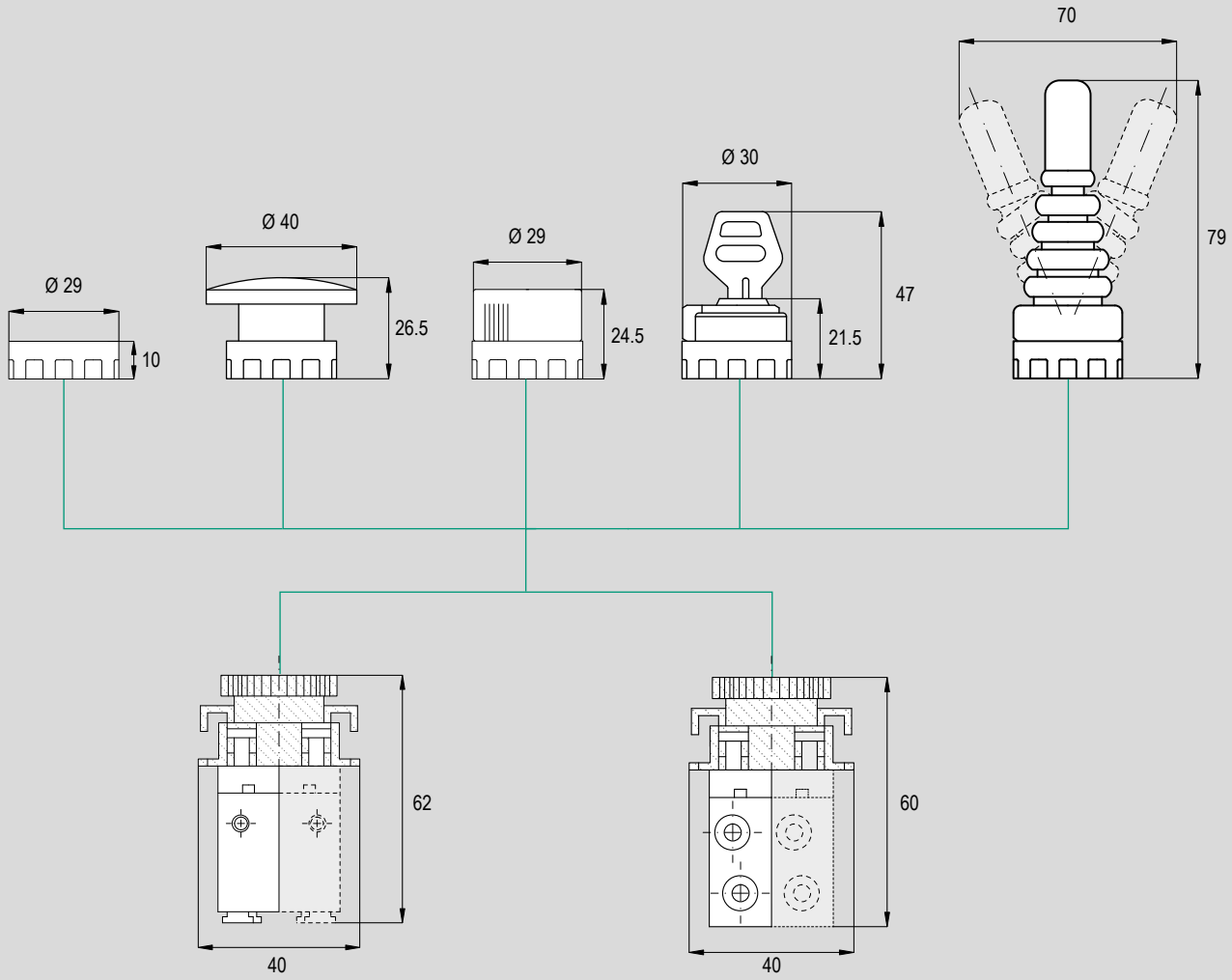

Microvalve Ø4 with bottom connections

Microvalve Ø4 with side connections

* For matching between microvalve Ø 4 and manual operating device, see page 2.180.5

Panel mounting

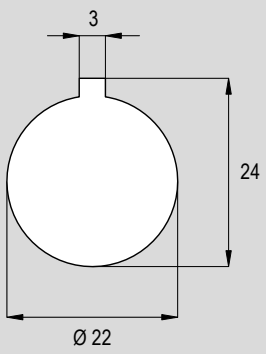

Dimensions of hole for panel mounting the microvalve Ø 4 with operating device mounted.

The panel should not exceed 6 mm.

Main features

Version	Code	Item	Symbol
3/2 normally open	030251	AM04132A	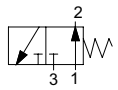
3/2 normally closed	030252	AM04132C	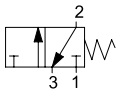
3/2 normally open side connections	030253	AM04132AL	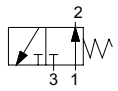
3/2 normally closed side connections	030254	AM04132CL	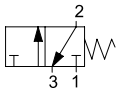



Technical data

Version	3/2 normally open	3/2 normally closed	3/2 normally open with side connections	3/2 normally closed with side connections
Code	030251	030252	030253	030254
Item	AM04132A	AM04132C	AM04132AL	AM04132CL
Size	Ø 4			
Fluid	Compressed air with or without lubrication. Lubrication, if started, must be continued.			
Pressure range	0 ÷ 8 bar			
Temperature range	-20°C ÷ +80°C			
Flow at 6 bar with ΔP 1 bar	80 Nl/min.			
Operating force	5 N			
Connections	Push-in fittings for tube ext. Ø 4 mm, bottom		Push-in fittings for tube ext. Ø 4 mm, side	
Fastening	Through 2 holes Ø 4 mm on the body, or through 1 hole Ø 22 mm on panel* with manual operating device mounted			
Mounting	In every position			

* For panel mounting hole dimensions see page 2.180.9

Notes

Manual operating device to be ordered separately, for matching see page 2.180.5.

For dimensions and features see from page 2.185.10

Dimensions* with standard connections

Type: **AM04132A**

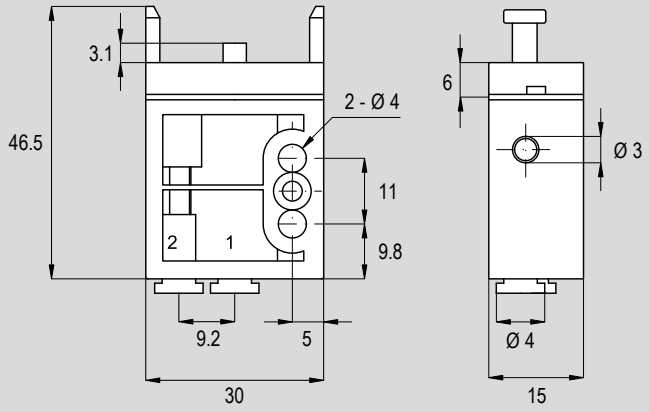

Type: **AM04132C**

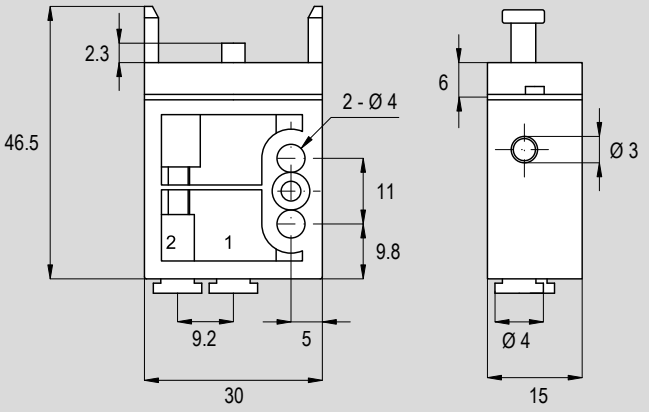

Version	Symbol	Code	Item
3/2 normally open with bottom connections	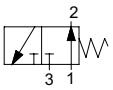	030251	AM04132A

Version	Symbol	Code	Item
3/2 normally closed with bottom connections	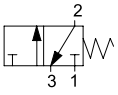	030252	AM04132C

* For overall dimension with manual operating device mounted, see page 2.180.6

Dimensions* with side connection option (L)

Type: **AM04132AL**

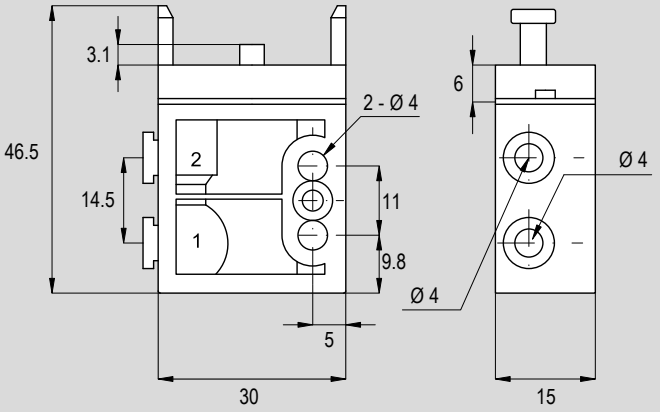

Type: **AM04132CL**

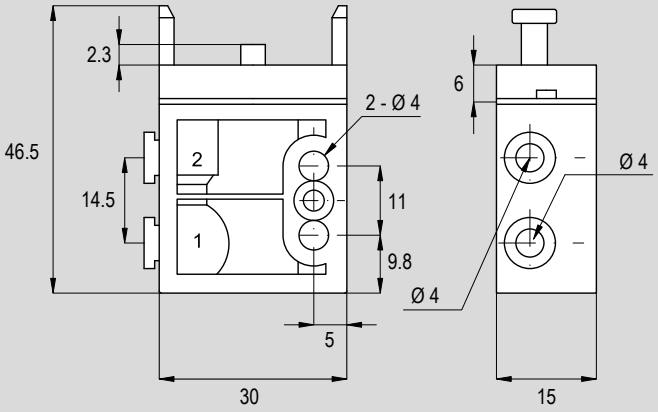

Version	Symbol	Code	Item
3/2 normally open with side connections	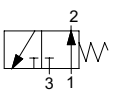	030253	AM04132AL

Version	Symbol	Code	Item
3/2 normally closed with side connections	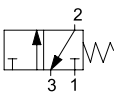	030254	AM04132CL

* For overall dimension with manual operating device mounted, see page 2.180.6

Main features

Version	Code	Item	Symbol
5/2 spring return	030261	AM041520	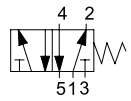
5/2 spring return with side connections	030262	AM041520L	





Technical data

Version	5/2 spring return	5/2 spring return with side connections
Code	030261	030262
Item	AM041520	AM041520L
Size	Ø 4	
Fluid	Compressed air with or without lubrication. Lubrication, if started, must be continued.	
Pressure range	0 ÷ 8 bar	
Temperature range	-20°C ÷ +80°C	
Flow at 6 bar with ΔP 1 bar	80 Nl/min.	
Operating force	5 N	
Connections	Push-in fittings for tube ext. Ø 4 mm, bottom	Push-in fittings for tube ext. Ø 4 mm, side
Fastening	Through 2 holes Ø 4 mm on the body, or through 1 hole Ø 22 mm on panel* with manual operating device mounted	
Mounting	In every position	

* For panel mounting hole dimensions see page 2.180.9

Notes

Manual operating device to be ordered separately, for matching see page 2.180.5.

For dimensions and features see from page 2.185.10

Dimensions* with standard connections

Type: **AM041520**

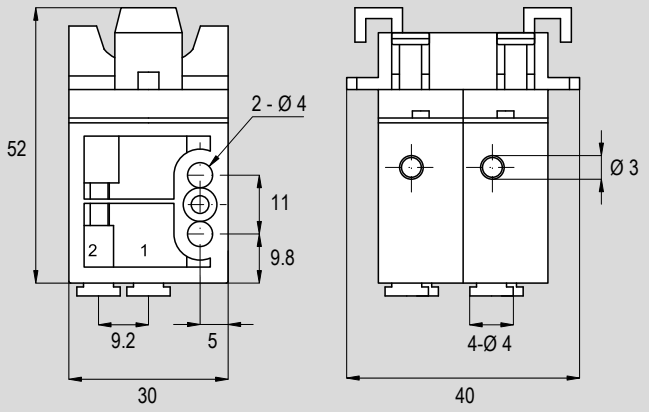

Dimensions* with side connection option (L)

Type: **AM041520L**

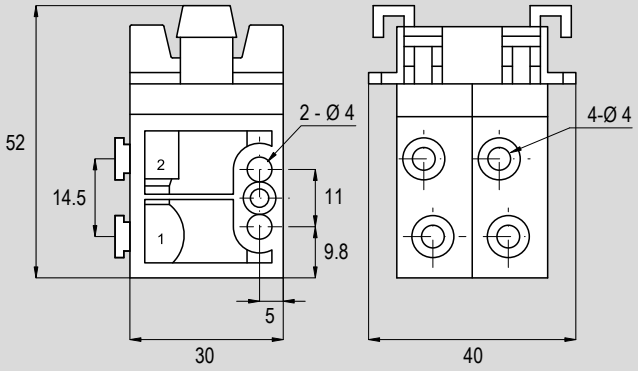

Version	Symbol	Code	Item
5/2 spring return with bottom connections	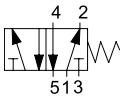	030261	AM041520

Version	Symbol	Code	Item
5/2 spring return with side connections	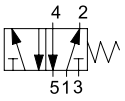	030262	AM041520L

* For overall dimension with manual operating device mounted, see page 2.180.6

Main features

Version	Symbol	Code	Item
Red recessed button spring return		030271	AP11R
Green recessed button spring return		030273	AP11V
Black recessed button spring return		030272	AP11N





Technical data

Version	AP11		
Code	030271	030273	030272
Item	AP11R	AP11V	AP11N
Device type	Recessed button		
Function	Spring return		
Button color	Red	Green	Black
Temperature range	-20°C ÷ +80°C		
Microvalves matching	See page 2.180.5		

Dimensions*

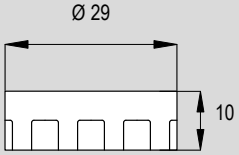

* For overall dimension of manual operating device mounted on the microvalve, see page 2.180.6

Main features

Version	Symbol	Code	Item
Red push head button spring return		030274	AP21R
Green push head button spring return		030280	AP21V
Black push head button spring return		030281	AP21N
Red push head button two positions detent "twist and release"	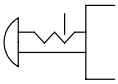	030275	AP22R



Technical data

Version	AP2			
Code	030274	030280	030281	030275
Item	AP21R	AP21V	AP21N	AP22R
Device type	Push head			
Function	Spring return			Two positions detent
Button color	Red	Green	Black	Red
Temperature range	-20°C ÷ +80°C			
Microvalves matching	See page 2.180.5			

Dimensions*

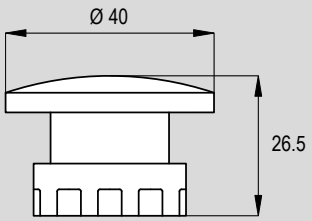

* For overall dimension of manual operating device mounted on the microvalve, see page 2.180.6

Main features

Version	Symbol	Code	Item
Black manual selector Two positions detent	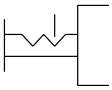	030276	AP32N
Black manual selector Three positions detent	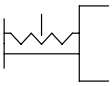	030277	AP33N



Technical data

Version	AP3	
Code	030276	030277
Item	AP32N	AP33N
Device type	Manual selector	
Function	Two positions detent	Three positions detent
Button color	Black	
Temperature range	-20°C ÷ +80°C	
Microvalves matching	See page 2.180.5	

Dimensions*

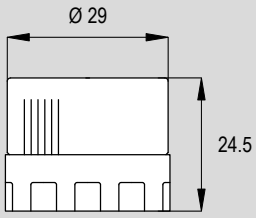

* For overall dimension of manual operating device mounted on the microvalve, see page 2.180.6

Main features

Version	Symbol	Code	Item
Black key selector Two positions detent	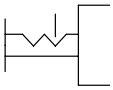	030278	AP42C



Technical data

Version	AP42C
Code	030278
Item	AP42C
Device type	Key selector
Function	Two positions detent
Button color	Black
Temperature range	-20°C ÷ +80°C
Microvalves matching	See page 2.180.5

Dimensions*

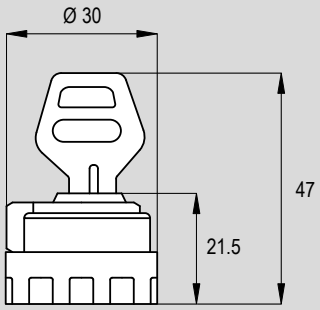

* For overall dimension of manual operating device mounted on the microvalve, see page 2.180.6

Main features

Version	Symbol	Code	Item
Black lever Three positions detent	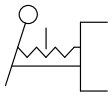	030279	AP53N



Technical data

Version	AP53C
Code	030279
Item	AP53C
Device type	Lever
Function	Three positions detent
Lever color	Black
Temperature range	-20°C ÷ +80°C
Microvalves matching	See page 2.180.5

Dimensions*

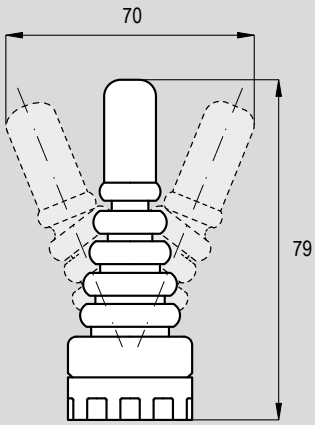

* For overall dimension of manual operating device mounted on the microvalve, see page 2.180.6

Notes

MECHANICAL
operated valves



Find out our
key products

- **Solution for most applications**
- **Easy and intuitive choice**
- **Excellent value for money**
- **Wide availability**
- **Fast delivery**

Features and certifications

Valves and microvalves mechanical operated.
Series AC valve are available in size Ø 4 mm and 1/8", in different functions and configurations (with plunger, bidirectional or unidirectional lever and roller), with standard or side connections.
Series A1 valves are available in size 1/8" only, in different functions and configurations (with sensitive aerial or side lever and roller).
Supplied as standard in compliance to Reach and RoHS directives, while additionally, series A1 valve are SIL certified.

Series AC Ø 4 3/2 Normally Open

from page 2.201.10



Poppet microvalves series AC size Ø 4 mm mechanical operated, 3/2 normally open, available with plunger, with bi-directional lever and roller or with uni-directional lever.
Bottom or side connections available.

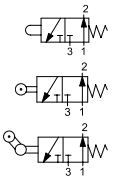

Series AC Ø 4 3/2 Normally Closed

from page 2.201.30



Poppet microvalves series AC size Ø 4 mm mechanical operated, 3/2 normally closed, available with plunger, with bi-directional lever and roller or with uni-directional lever.
Bottom or side connections available.

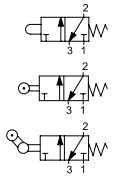

Series AC 1/8" 3/2 Normally Closed

from page 2.203.10



Poppet valves series AC size 1/8" mm mechanical operated, 3/2 normally closed, available with plunger, with bi-directional lever and roller or with uni-directional lever and roller.

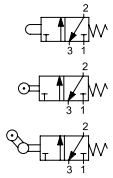

Series AC 1/8" 5/2 Spring return

from page 2.203.30



Poppet valves series AC size 1/8" mm mechanical operated, 5/2 spring return, available with plunger, with bi-directional lever and roller or with uni-directional lever and roller.

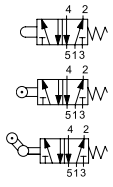

Series A1 1/8" 3/2 Normally Closed Spring return

from page 2.206.10



Spool valves, servo-assisted, mechanical operated, with static seals and high flow, series A1. Available in size 1/8", 3/2 normally closed spring return, with sensitive aerial.



Series A1 1/8" 5/2 Spring return

from page 2.206.30



Spool valves, servo-assisted, mechanical operated, with static seals and high flow, series A1. Available in size 1/8", 5/2 spring return, with sensitive aerial.



Series A1 1/8" 5/2 Spring return

from page 2.208.10



Spool valves, servo-assisted, mechanical operated, with static seals and high flow, series A1. Available in size 1/8", 5/2 spring return, with side lever and roller or adjustable side lever and roller.

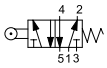

Code key valves series AC

Series	Configuration	Size	Function	Connections [3]
AC	**1**	**18**	**132C**	**L**
AC	1 = Plunger	04 = Ø 4	132A [1] = 3/2 Normally Open	= Bottom
	2 = Bi-directional lever and roller	18 = 1/8"	132C = 3/2 Normally Closed	L = Side
	3 = Uni-directional lever [4]		1520 [2] = 5/2 Spring return	

How to order

Series	Configuration	Size	Function	Connections
AC	**1**	**18**	**132C**	**L**

Notes

Options in the same grid are alternative to each others.

(1) Function 3/2 Normally Open (132A) available only for size Ø 4 (04).

(2) Function 5/2 (1520) available only for size 1/8" (18).

(3) Option "connections" available only for size Ø 4 (04). For size 1/8" (18) avaliable side connections only, specification not required in code key.

(4) Lever and roller for size 1/8".

Standard materials microvalves Ø 4 e valves 1/8"

Type: **AC Ø 4**

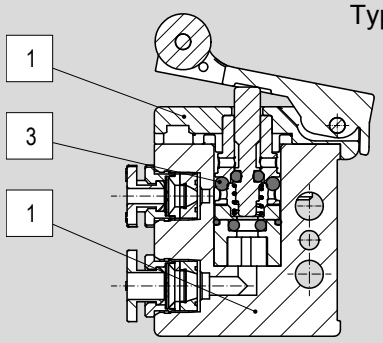

Type: **AC 1/8"**

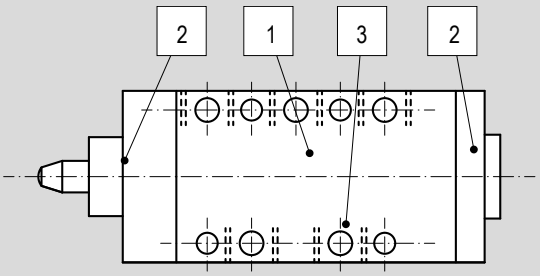

Position	Description	Material			
		AC Ø 4 3/2 N.O.	Ø 4 3/2 N.C.	1/8" 3/2 N.C.	1/8" 5/2
1	Body	Acetal resin		Die-cast painted aluminium	
2	Heads	-		Tecnopolymer	
3	Seals	NBR			

Code key valves series A1ME

Series	Actuation	Size	Function	Configuration
A1	**ME**	**1**	**50**	**RLB**
A1	ME = Mechanic	1 = 1/8"	30 = 3/2 Normally Closed 50 = 5/2 Spring return	ANT = Sensitive aerial RLB(1) = Side lever and roller RLBR(1) = Adjustable side lever and roller

How to order

Series	Actuation	Size	Function	Configuration
A1	**ME**	**1**	**50**	**RLB**

Notes

Options in the same grid are alternative to each others.

(1) Side lever and roller (RLB) and adjustable side lever and roller (RLBR) available only for function 5/2 (50).

Standard materials valves A1

Type: **A1..ANT**

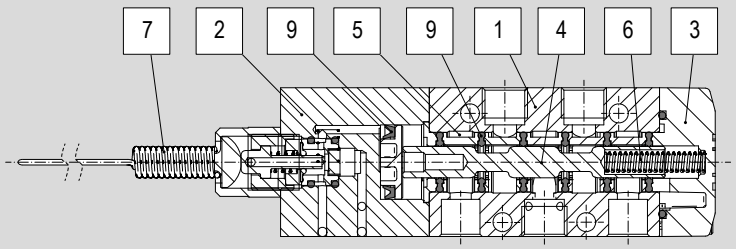

Type: **A1..RLB**
A1..RLBR

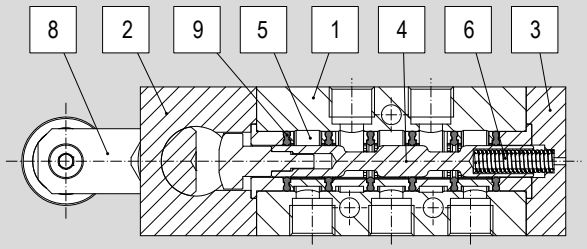

Position	Description	Material		
		A1..ANT	A1..RLB	A1..RLBR
1	Body	Anodized aluminium		
2	Front cover	Anodized aluminium		
3	Rear cover	Tecnopolymer	Anodized aluminium	
4	Spool	Hard anodized aluminium		
5	Distancers	Tecnopolymer		
6	Spring	Spring steel		
7	Aerial spring	Stainless Steel AISI 304	-	
8	Lever	-	Anodized aluminium	
9	Seals	HNBR		

Accessories

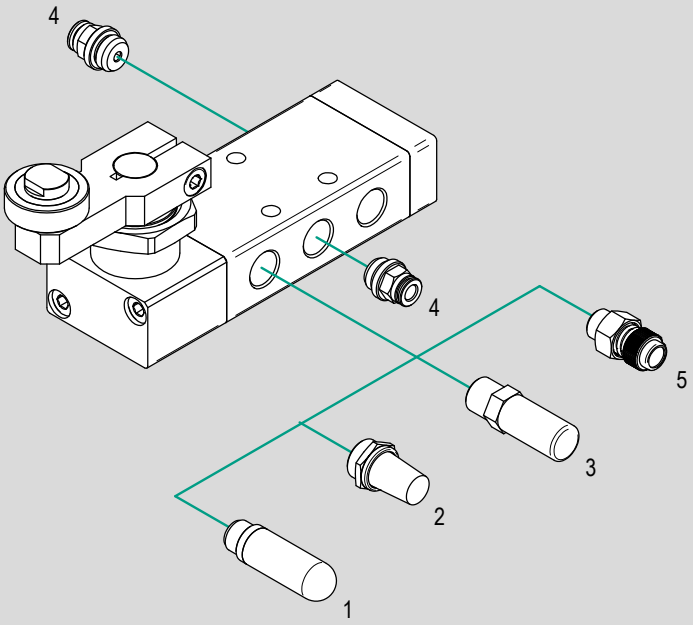

N.	Item	Description	Compliance	Matching			Code key page	Data sheet page
				AC04..	AC18..	A1ME..		
1	AS..	Plastic silencers	-	-	●	●	4.151.10	
	SP..			-	●	●	4.151.20	
2	A..	Sintered silencers	-	-	●	●	4.153.10	
3	M..	Metal silencers	-	-	●	●	4.155.10	
4	R..	Push-in fittings	UNI ISO 228/1 UNI ISO7/1 ISO R/232	-	●	●	4.2.1	
5	A..	Silenced exhaust restrictors	-	-	●	●	4.97.1	

Key
● matching accessory; - not matching accessory

Mechanical operated valves series AC
Ø 4, 3/2 Normally open

Main features

Version	Code	Item	Symbol
3/2 normally open with plunger with bottom connections	032291	AC104132A	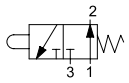
3/2 normally open with plunger with side connections	032293	AC104132AL	
3/2 normally open with bi-directional lever and roller with bottom connections	032295	AC204132A	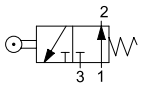
3/2 normally open with bi-directional lever and roller with side connections	032297	AC204132AL	
3/2 normally open with uni-directional lever with bottom connections	032299	AC304132A	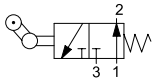
3/2 normally open with uni-directional lever with side connections	032301	AC304132AL	



Technical data

Version	3/2 N.O. plunger bottom connections	3/2 N.O. bidirectional lever and roller bottom connections	3/2 N.O. unidirectional lever bottom connections	3/2 N.O. with plunger side connections	3/2 N.O. bidirectional lever and roller side connections	3/2 N.O. unidirectional lever side connections
Code	032291	032295	032299	032293	032297	032301
Item	AC104132A	AC204132A	AC304132A	AC104132AL	AC204132AL	AC304132AL
Size	Ø 4					
Fluid	Compressed air with or without lubrication. Lubrication, if started, must be continued.					
Pressure range	0 ÷ 8 bar					
Temperature range	-10°C ÷ +60°C					
Flow at 6 bar with ΔP 1 bar	60 Nl/min.					
Operating force	5 N					
Connections	Push-in fittings for Ø ext. 4 mm tube, on bottom			Push-in fittings for Ø ext. 4 mm tube, on side		
Fastening	Through holes Ø 4 mm on the body (screws not included)					
Mounting	In every position					

Dimensions

Type: **AC104132A**

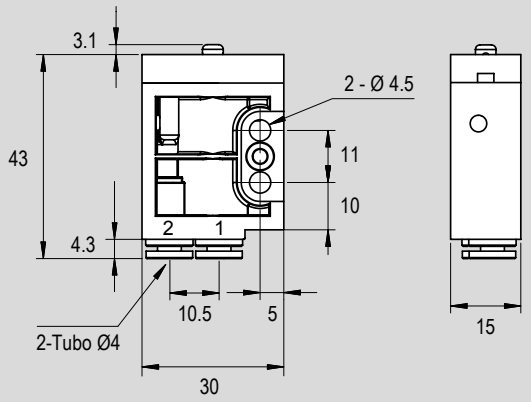

Version	Symbol	Code	Item
3/2 normally open with plunger with bottom connections	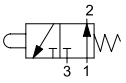	032291	AC104132A

Type: **AC104132AL**

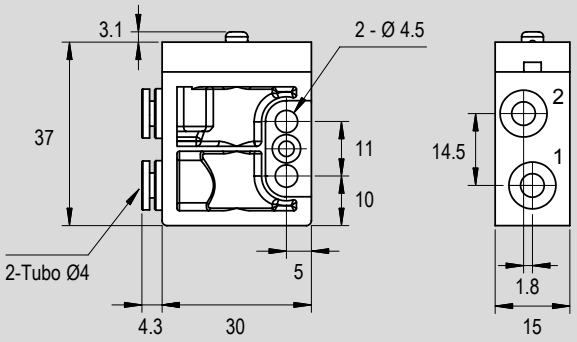

Version	Symbol	Code	Item
3/2 normally open with plunger with side connections	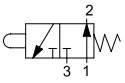	032293	AC104132AL

Dimensions

Type: **AC204132A**

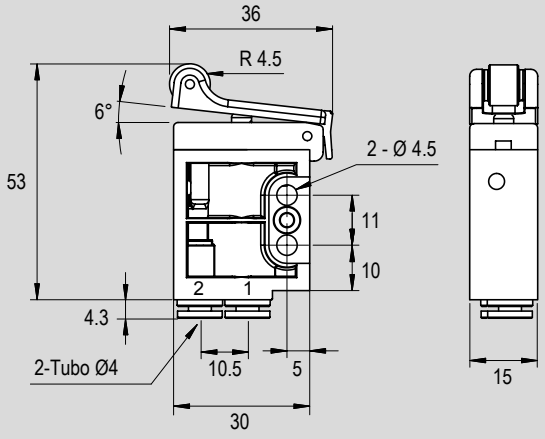

Version	Symbol	Code	Item
3/2 normally open with bi-directional lever and roller with bottom connections	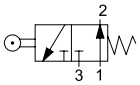	032295	AC204132A

Type: **AC204132AL**

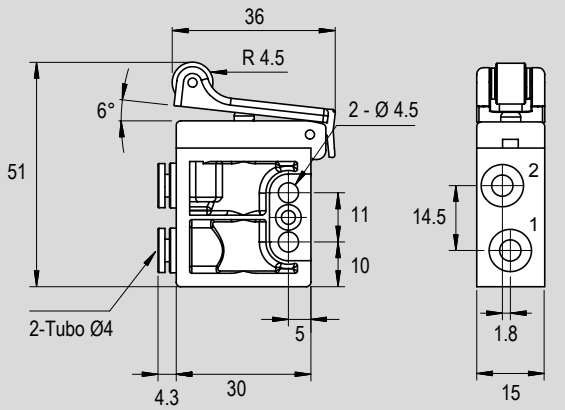

Version	Symbol	Code	Item
3/2 normally open with bi-directional lever and roller with side connections	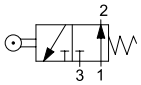	032297	AC204132AL

Dimensions

Type: **AC304132A**

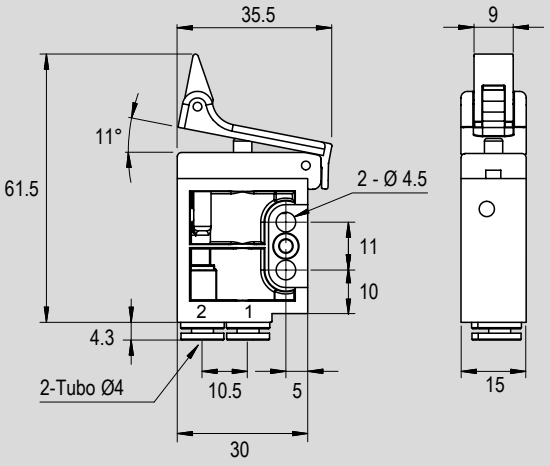

Type: **AC304132AL**

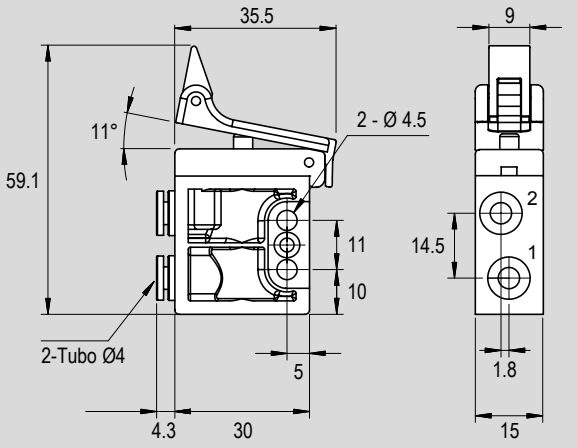

Version	Symbol	Code	Item
3/2 normally open with uni-directional lever with bottom connections	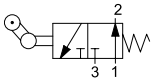	032299	AC304132A

Version	Symbol	Code	Item
3/2 normally open with uni-directional lever with side connections	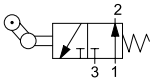	032301	AC304132AL

Mechanical operated valves series AC

Ø 4, 3/2 Normally closed

Main features

Version	Code	Item	Symbol
3/2 normally closed with plunger with bottom connections	032292	AC104132C	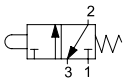
3/2 normally closed with plunger with side connections	032294	AC104132CL	
3/2 normally closed with bi-directional lever and roller with bottom connections	032296	AC204132C	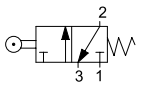
3/2 normally closed with bi-directional lever and roller with side connections	032298	AC204132CL	
3/2 normally closed with uni-directional lever with bottom connections	032303	AC304132C	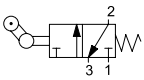
3/2 normally closed with uni-directional lever with side connections	032302	AC304132CL	



Technical data

Version	3/2 N.C. plunger bottom connections	3/2 N.C. bidirectional lever and roller bottom connections	3/2 N.C. unidirectional lever bottom connections	3/2 N.C. with plunger side connections	3/2 N.C. bidirectional lever and roller side connections	3/2 N.C. unidirectional lever side connections
Code	032292	032296	032303	032294	032298	032302
Item	AC104132C	AC204132C	AC304132C	AC104132CL	AC204132CL	AC304132CL
Size	Ø 4					
Fluid	Compressed air with or without lubrication. Lubrication, if started, must be continued.					
Pressure range	0 ÷ 8 bar					
Temperature range	-10°C ÷ +60°C					
Flow at 6 bar with ΔP 1 bar	60 Nl/min.					
Operating force	5 N					
Connections	Push-in fittings for Ø ext. 4 mm tube, on bottom			Push-in fittings for Ø ext. 4 mm tube, on side		
Fastening	Through holes Ø 4 mm on the body (screws not included)					
Mounting	In every position					

Dimensions

Type: **AC104132C**

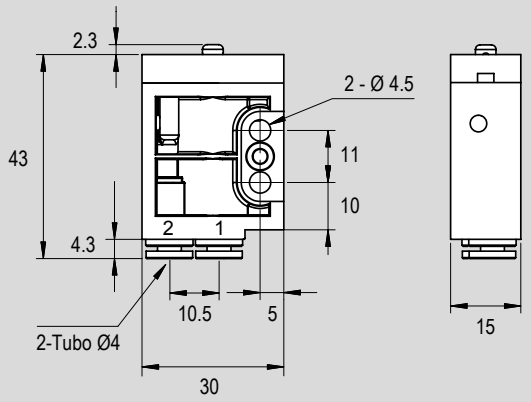

Version	Symbol	Code	Item
3/2 normally closed with plunger with bottom connections	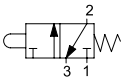	032292	AC104132C

Type: **AC104132CL**

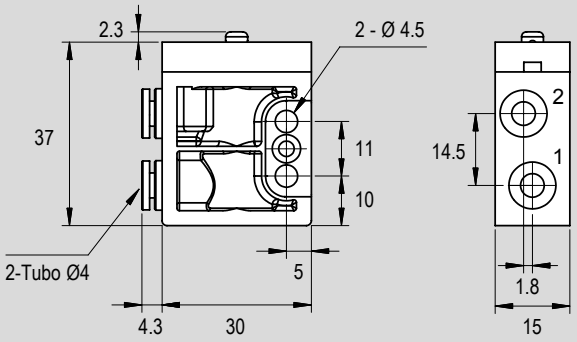

Version	Symbol	Code	Item
3/2 normally closed with plunger with side connections	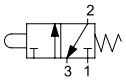	032294	AC104132CL

Dimensions

Type: **AC204132C**

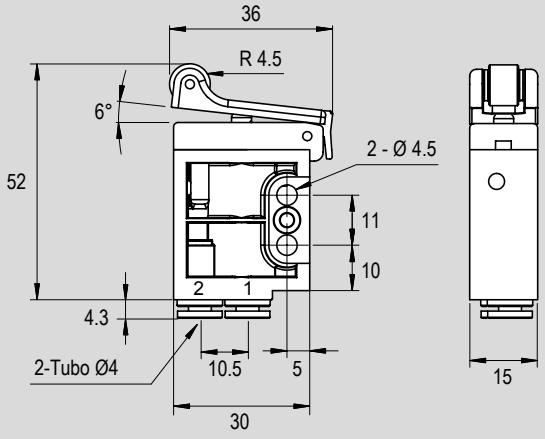

Version	Symbol	Code	Item
3/2 normally closed with bi-directional lever and roller with bottom connections	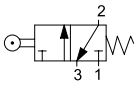	032296	AC204132C

Type: **AC204132CL**

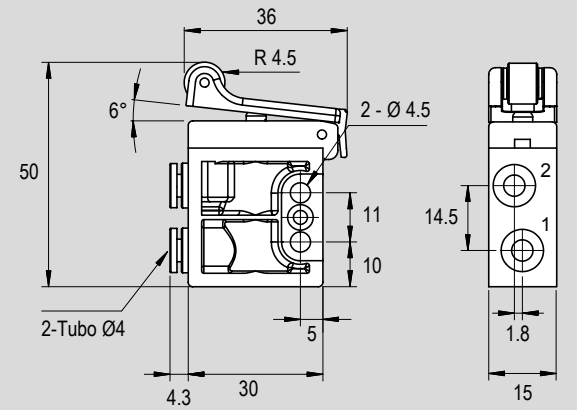

Version	Symbol	Code	Item
3/2 normally closed with bi-directional lever and roller with side connections	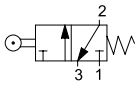	032298	AC204132CL

Dimensions

Type: **AC304132C**

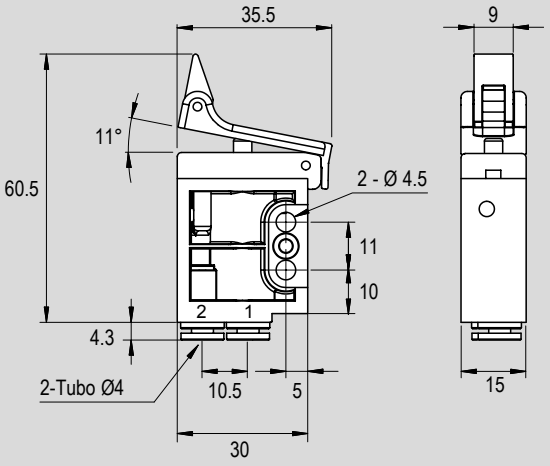

Version	Symbol	Code	Item
3/2 normally closed with uni-directional lever with bottom connections	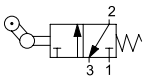	032303	AC304132C

Type: **AC304132CL**

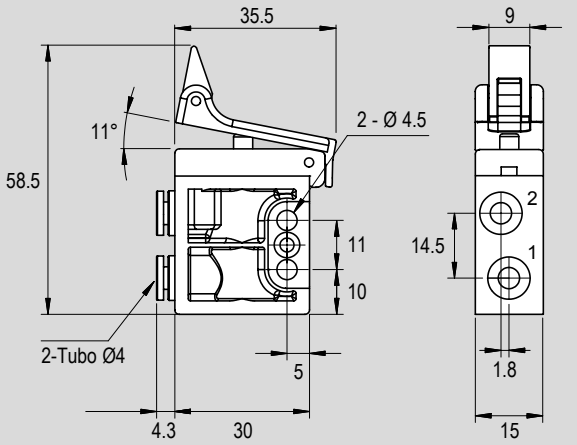

Version	Symbol	Code	Item
3/2 normally closed with uni-directional lever with side connections	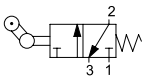	032302	AC304132CL

Mechanical operated valves series AC

1/8", 3/2 Normally closed

Main features

Version	Code	Item	Symbol
3/2 Normally closed with plunger	032600	AC118132C	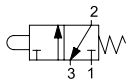
3/2 Normally closed with bi-directional lever and roller	032680	AC218132C	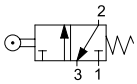
3/2 Normally closed with uni-directional lever and roller	032700	AC318132C	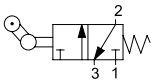







Technical data

Version	3/2 Normally closed with plunger	3/2 Normally closed with bi-directional lever and roller	3/2 Normally closed with uni-directional lever and roller
Code	032600	032680	032700
Item	AC118132C	AC218132C	AC318132C
Size	1/8"		
Function	3/2		
Configuration	With plunger	with bi-directional lever and roller	with uni-directional lever and roller
Fluid	Compressed air with or without lubrication. Lubrication, if started, must be continued.		
Pressure range	0 ÷ 8 bar		
Temperature range	-20°C ÷ +80°C		
Orifice Ø	6 mm		
Flow at 6 bar with ΔP 1 bar	900 Nl/min.		
Connections	G1/8"		
Fastening	Through holes on the body (screws not included)		
Mounting	In every position		

Flow chart

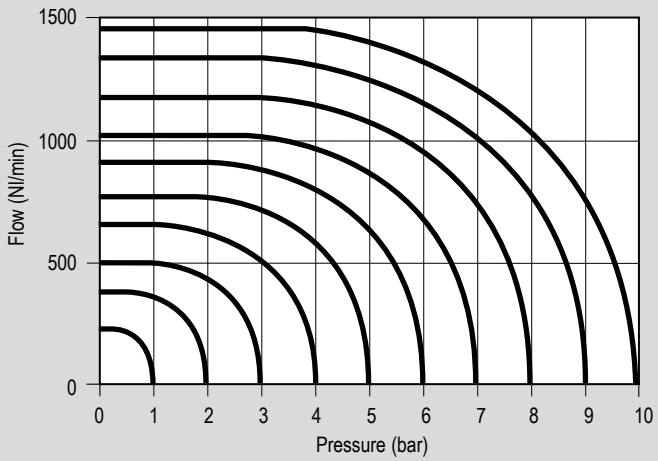

Standard dimensions

Type: **AC118132C**

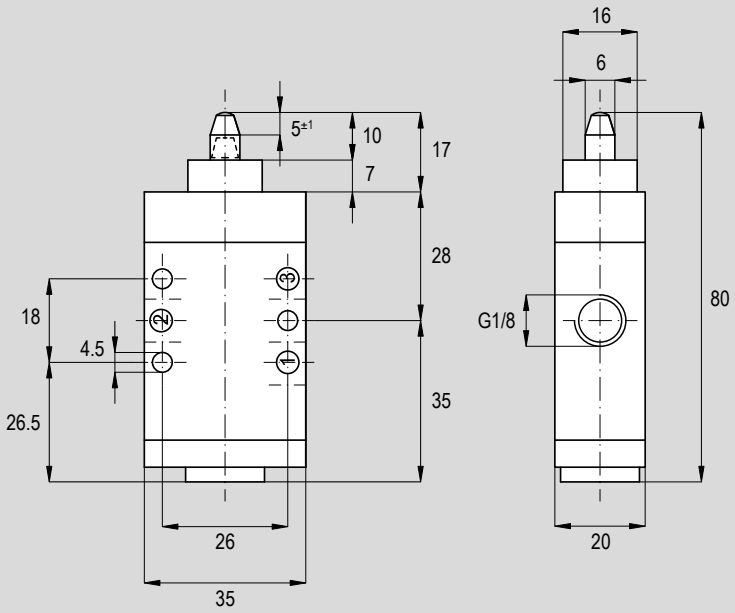

Version	Symbol	Code	Item
1/8" 3/2 Normally closed with plunger	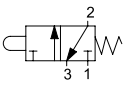	032600	AC118132C

Standard dimensions

Type: **AC218132C**

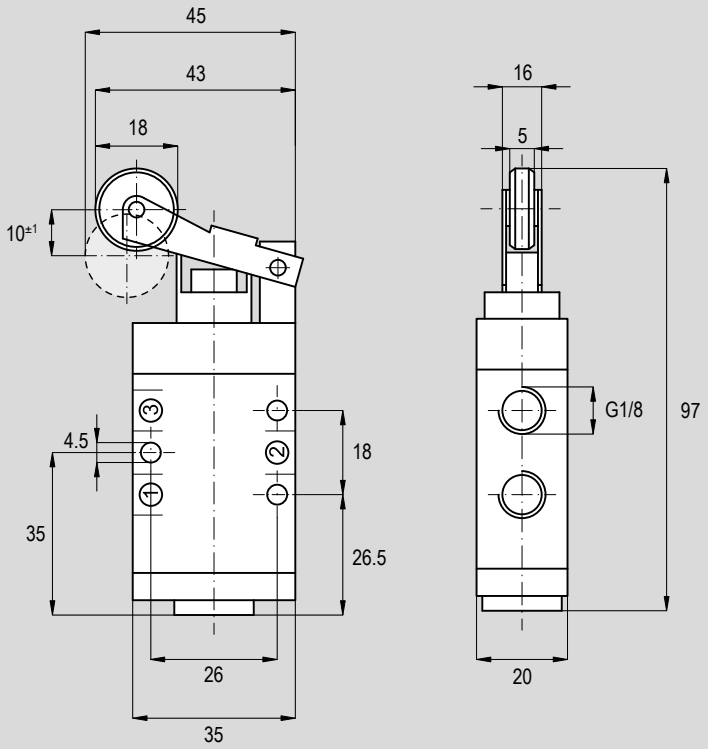

Version	Symbol	Code	Item
1/8" 3/2 Normally closed with bi-directional lever and roller	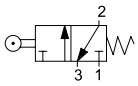	032680	AC218132C

Standard dimensions

Type: **AC318132C**

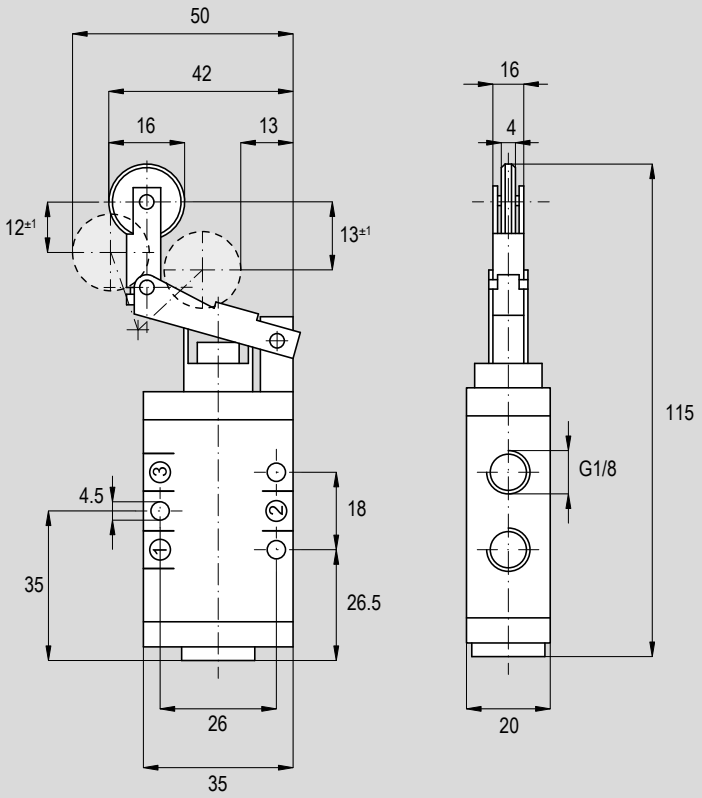

Version	Symbol	Code	Item
1/8" 3/2 Normally closed with uni-directional lever and roller	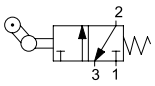	032700	AC318132C

Mechanical operated valves series AC

1/8", 5/2 Spring return

Main features

Version	Code	Item	Symbol
5/2 Spring return with plunger	032640	AC1181520	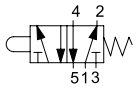
5/2 Spring return with bi-directional lever and roller	032720	AC2181520	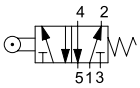
5/2 Spring return with uni-directional lever and roller	032740	AC3181520	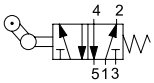







Technical data

Version	5/2 Spring return with plunger	5/2 Spring return with bi-directional lever and roller	5/2 Spring return with uni-directional lever and roller
Code	032640	032720	032740
Item	AC1181520	AC2181520	AC3181520
Size	1/8"		
Function	5/2		
Configuration	With plunger	with bi-directional lever and roller	with uni-directional lever and roller
Fluid	Compressed air with or without lubrication. Lubrication, if started, must be continued.		
Pressure range	0 ÷ 8 bar		
Temperature range	-20°C ÷ +80°C		
Orifice Ø	6 mm		
Flow at 6 bar with ΔP 1 bar	900 Nl/min.		
Connections	G1/8"		
Fastening	Through holes on the body (screws not included)		
Mounting	In every position		

Flow chart

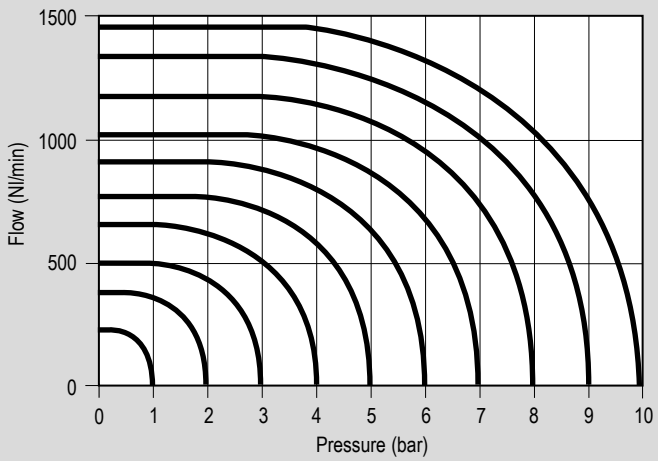

Standard dimensions

Type: **AC1181520**

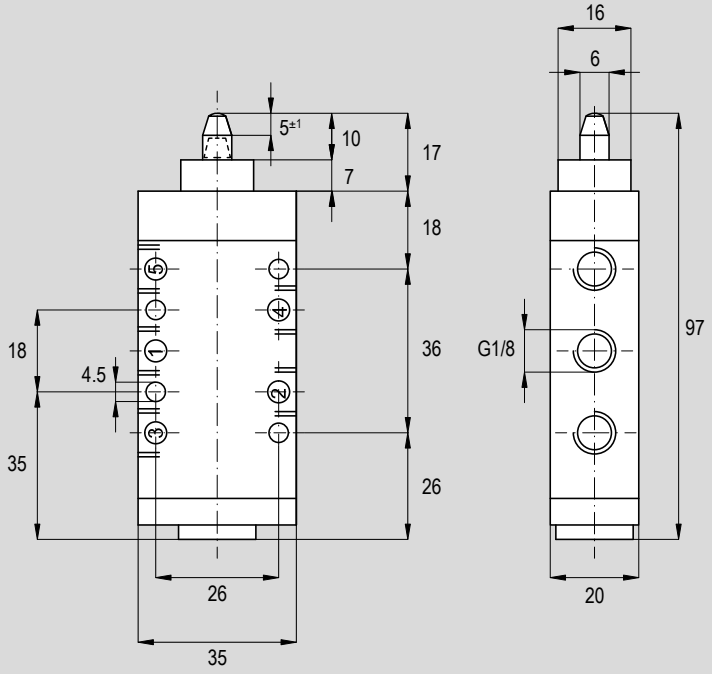

Version	Symbol	Code	Item
1/8" 5/2 Spring return with plunger	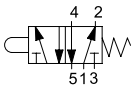	032640	AC1181520

Standard dimensions

Type: **AC2181520**

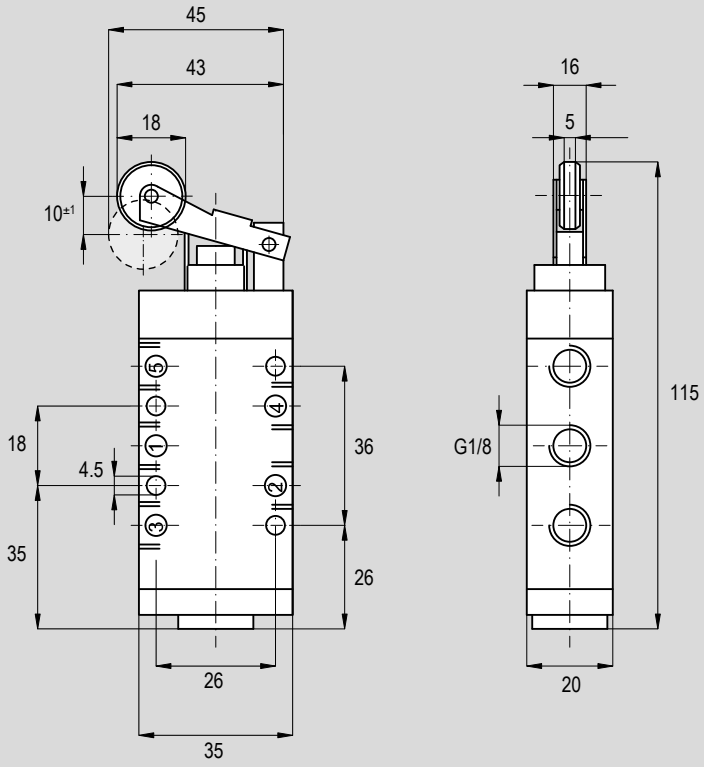

Version	Symbol	Code	Item
1/8" 5/2 Spring return with bi-directional lever and roller	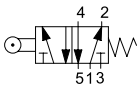	032720	AC2181520

Standard dimensions

Type: **AC3181520**

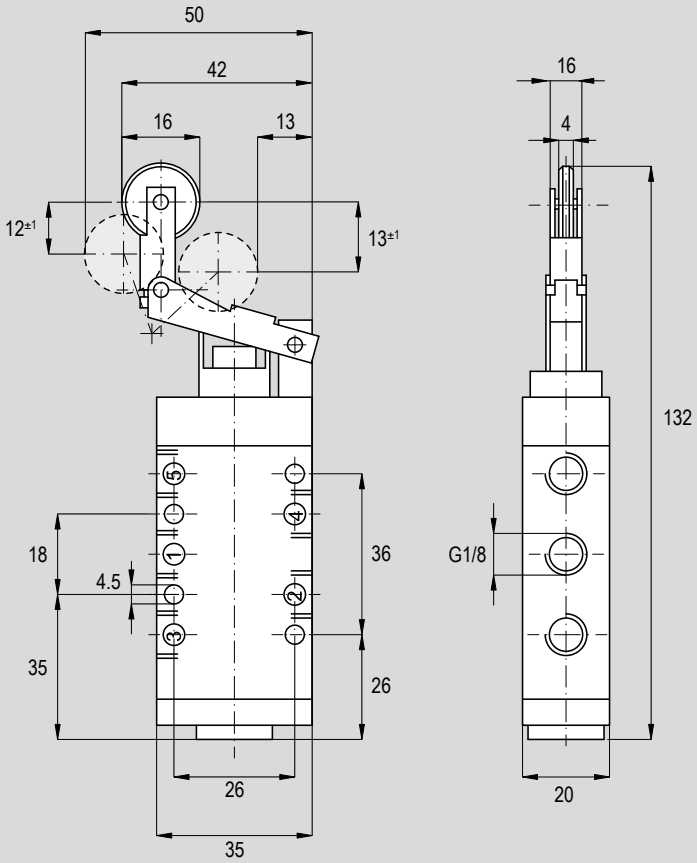

Version	Symbol	Code	Item
1/8" 5/2 Spring return with uni-directional lever and roller	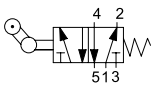	032740	AC3181520

Mechanical operated valves series A1

1/8", 3/2 Normally closed, with sensitive aerial

Main features

Version	Code	Item	Symbol
3/2 Normally closed with sensitive aerial	034201	A1ME130ANT	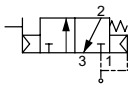



Technical data

Version	3/2 Normally closed with sensitive aerial
Code	034201
Item	A1ME130ANT
Size	1/8"
Function	3/2
Configuration	With sensitive aerial
Fluid	Compressed air with or without lubrication. Lubrication, if started, must be continued.
Pressure range	1 ÷ 10 bar
Temperature range	-10°C ÷ +60°C
Orifice Ø	6.5 mm
Flow at 6 bar with ΔP 1 bar	650 Nl/min.
Connections	G1/8"
Fastening	Through holes on the body (screws not included)
Mounting	In every position

Standard dimensions

Type: **A1ME130ANT**

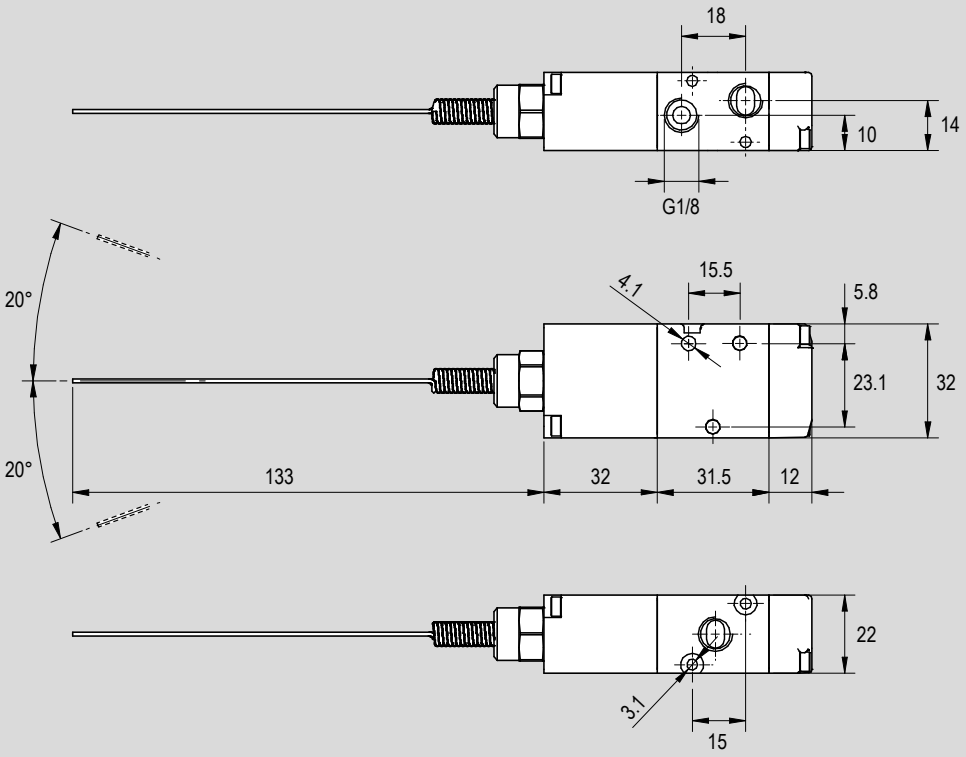

Version	Symbol	Code	Item
1/8" 3/2 Normally closed with sensitive aerial	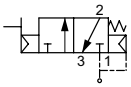	034201	A1ME130ANT

Mechanical operated valves series A1

1/8", 5/2 Spring return, with sensitive aerial

Main features

Version	Code	Item	Symbol
5/2 Spring return with sensitive aerial	034202	A1ME150ANT	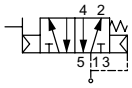



Technical data

Version	5/2 spring return with sensitive aerial
Code	034202
Item	A1ME150ANT
Size	1/8"
Function	5/2
Configuration	With sensitive aerial
Fluid	Compressed air with or without lubrication. Lubrication, if started, must be continued.
Pressure range	1 ÷ 10 bar
Temperature range	-10°C ÷ +60°C
Orifice Ø	6.5 mm
Flow at 6 bar with ΔP 1 bar	650 Nl/min.
Connections	G1/8"
Fastening	Through holes on the body (screws not included)
Mounting	In every position

Standard dimensions

Type: **A1ME150ANT**

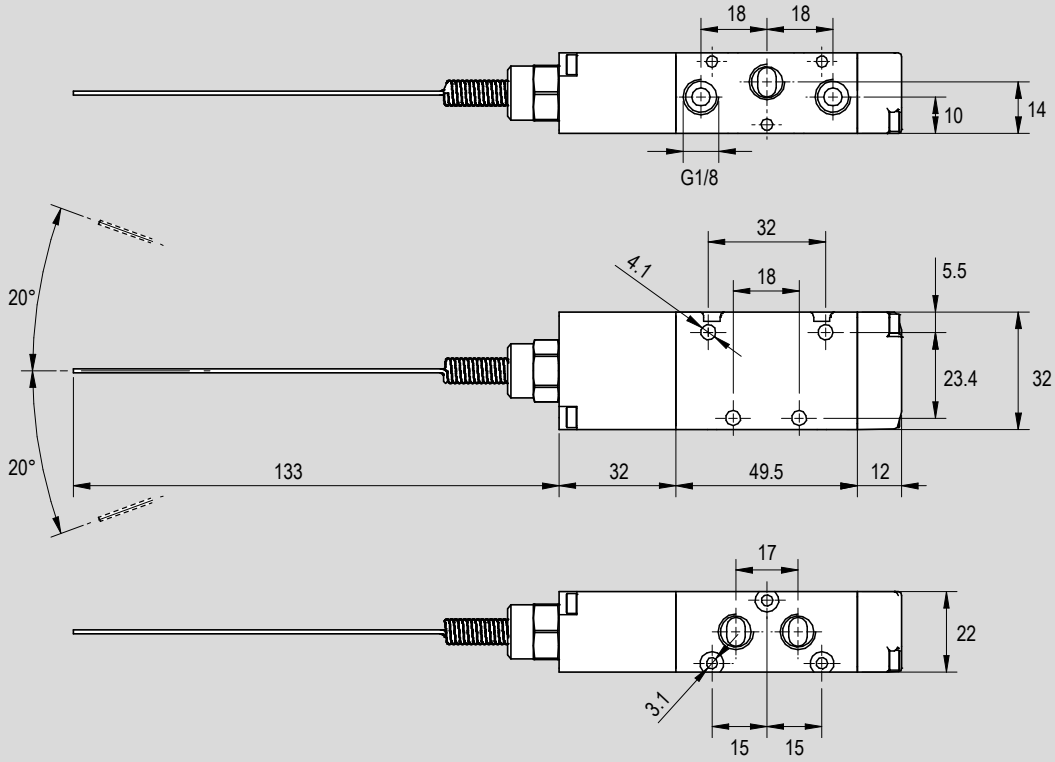

Version	Symbol	Code	Item
1/8" 5/2 Spring return with sensitive aerial	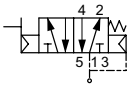	034202	A1ME150ANT

Mechanical operated valves series A1

1/8", 5/2 Spring return, with side lever and roller

Main features

Version	Code	Item	Symbol
5/2 Spring return with side lever and roller	034156	A1ME150RLB	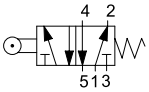
5/2 Spring return with adjustable side lever and roller	034157	A1ME150RLBR	



Technical data

Version	5/2 spring return with side lever and roller	5/2 spring return with adjustable side lever and roller
Code	034156	034157
Item	A1ME150RLB	A1ME150RLBR
Size	1/8"	
Function	5/2	
Configuration	With side lever and roller	With adjustable side lever and roller
Fluid	Compressed air with or without lubrication. Lubrication, if started, must be continued.	
Pressure range	1 ÷ 10 bar	
Temperature range	-10°C ÷ +60°C	
Orifice Ø	6.5 mm	
Flow at 6 bar with ΔP 1 bar	650 Nl/min.	
Connections	G1/8"	
Fastening	Through holes on the body (screws not included)	
Mounting	In every position	

Standard dimensions

Type: **A1ME150RLB**

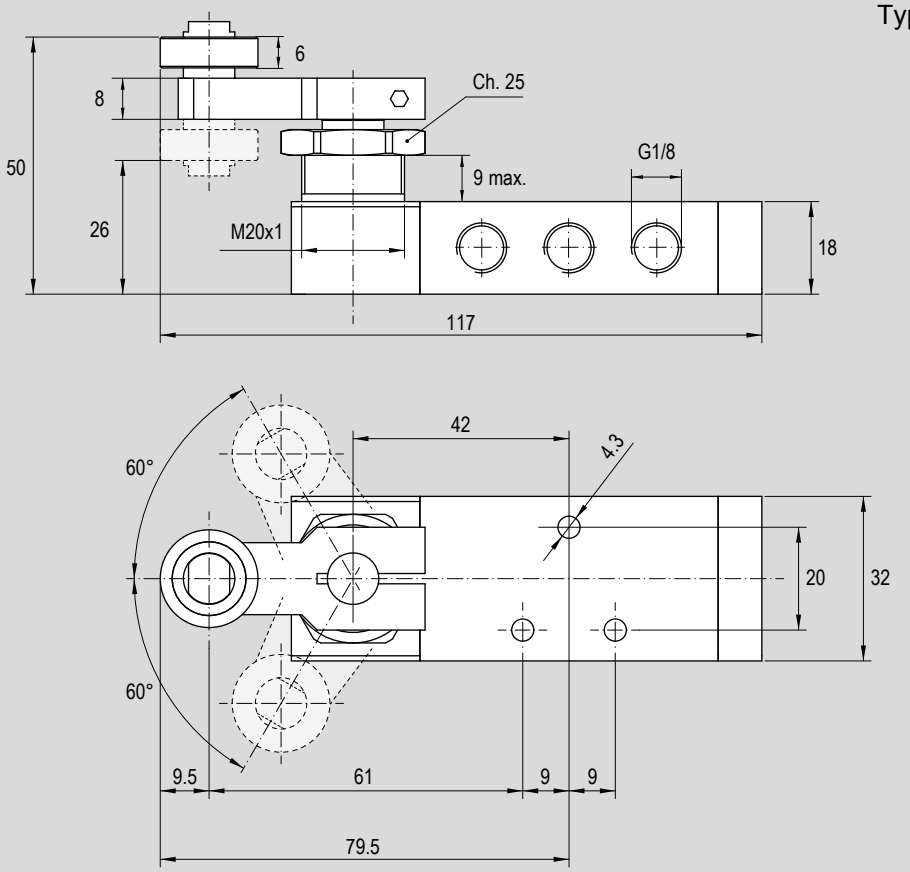

Version	Symbol	Code	Item
1/8" 5/2 spring return with side lever and roller	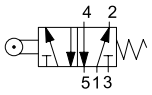	034156	A1ME150RLB

Standard dimensions

Type: **A1ME150RLBR**

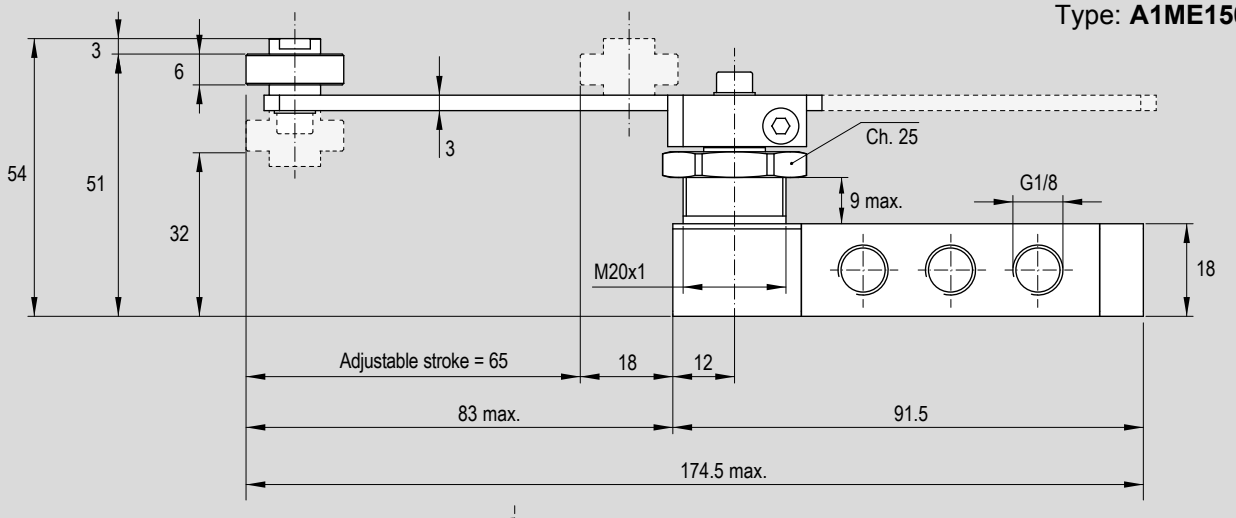

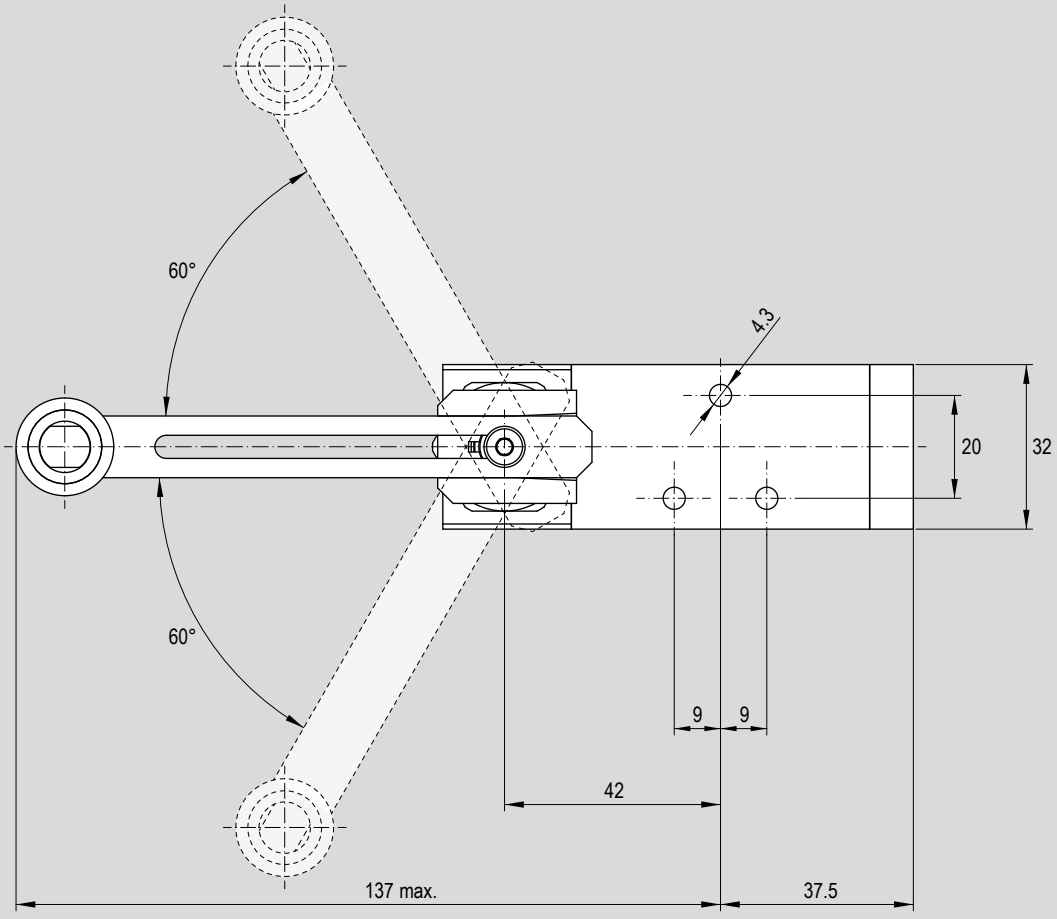

Version	Symbol	Code	Item
1/8" 5/2 spring return with adjustable side lever and roller	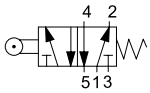	034157	A1ME150RLBR

Notes

ANCILLARY
valves



Find out our
key products

- **Solution for most applications**
- **Easy and intuitive choice**
- **Excellent value for money**
- **Wide availability**
- **Fast delivery**

Features and certifications

Ancillary valves.
Series of ancillary valves in different functions, sizes and configurations.
Supplied as standard in compliance to Reach and RoHS directives.

Slide valves from page 2.251.1



Series of slide valves, manual operated. In line mounting, to close the supply and at the same time exhaust the downstream circuit air. Available in size from M5 to 3/4". NBR seals and blue slide as standard.

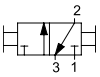

Miniature ball valves from brass hexagonal bar from page 2.253.1



Series of miniature ball valves from brass hexagonal bar, manual operated. In line mounting, to close or open the flow in both directions. Available in size from 1/8" to 3/4", female-female or male-female. With black lever.



Miniature ball valves with cast body from page 2.254.1



Series of miniature ball valves with cast body, manual operated, reduced dimension. In line mounting, to close or open the flow in both directions. Available in size from 1/8" to 1/4" female-female and from 1/8" to 3/8" male-female. With black lever.



Ball valve "full bore" from page 2.256.1



Series of full bore ball valves, manual operated with long lever. In line mounting, to close or open the flow in both directions. Available in size from 1/4" to 2" in configuration female-female. With black lever.



Quick exhaust valves from page 2.260.1



Series of quick exhaust valves, to increase the speed of a cylinder. Available in size from M5 to 1" (for size 3/4" and 1" also avaliable the"Maxi" version). PU seals as standard (NBR seals as standard for size M5).

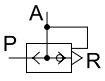

Unidirectional valves from page 2.263.1



Series of unidirectional valves, from hexagonal bar, female threads. In line mounting, allow the compressed air to flow in one direction only; therefor they are suitable for those applications where no return of compressed air to the feeding is allowed. Available from size from M5 to 3/4" in coniguration female-female. NBR seals as standard (FKM seals as standard for size 3/8" and size 1/2").

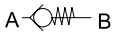

Safety valves from page 2.265.1



Series of adjustable safety valves, with pressure range from 3 to 7 bar. For mounting on air reservoirs or in all these applications requiring the pressure never exceed the fixed value. Available in sizes from 1/8" to 1". Fixed calibration for different pressures with certificate according 97/23/EC Directive (ISPESL on request) available as option.

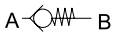

Main features

Version	Code	Item	Symbol
M5 blue	030701	V260005	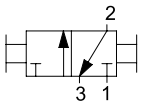
1/8” blue	030702	V260018	
1/4” blue	030703	V260014	
3/8” blue	030704	V260038	
1/2” blue	030705	V260012	
3/4” blue	030713	V260034	



Technical data

Version	Slide valves V26					
Code	030701	030702	030703	030704	030705	030713
Item	V260005	V260018	V260014	V260038	V260012	V260034
Size	M5	1/8”	1/4”	3/8”	1/2”	3/4”
Fluid	Filtered compressed air with or without lubrication					
Pressure range	0 ÷ 16 bar					
Temperature range	-10°C ÷ +80°C					
Orifice	2,5 mm	4 mm	7 mm	10 mm	14 mm	17 mm
Flow	100 Nl/min.	680 Nl/min.	1.300 Nl/min.	2.100 Nl/min.	3.800 Nl/min.	5.700 Nl/min.
Mounting	In-line					

Standard materials

Description	Material
Body	Nickel-plated and ground brass
Slide	Anodized aluminium (blue)
Seals	NBR

Code key

Series	Size
V26	**0018**

V26

0005 = M5
0018 = 1/8”
0014 = 1/4”
0038 = 3/8”
0012 = 1/2”
0034 = 3/4”

How to order

Series	Size
V26	**0018**

Standard dimensions

Type: **V26**

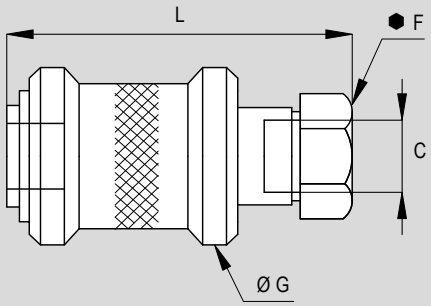

Code	Item	C (size)	⬢ F	Ø G	L
030701	V260005	M5	10	14	31
030702	V260018	1/8”	14	25	48
030703	V260014	1/4”	19	30	58
030704	V260038	3/8”	22	35	70
030705	V260012	1/2”	27	40	75
030713	V260034	3/4”	32	50	83

Ancillary valves
Miniature ball valves from brass hexagonal bar

Main features

Version	Code	Item	Symbol
Thread 1/8” female-female black lever	030501	1MVSFF	
Thread 1/4” female-female black lever	030502	2MVSFF	
Thread 3/8” female-female black lever	030503	3MVSFF	
Thread 1/2” female-female black lever	030504	4MVSFF	
Thread 3/4” female-female black lever	030505	5MVSFF	
Thread 1/8” male-female black lever	030601	1MVSMF	
Thread 1/4” male-female black lever	030602	2MVSMF	
Thread 3/8” male-female black lever	030603	3MVSMF	
Thread 1/2” male-female black lever	030604	4MVSMF	
Thread 3/4” male-female black lever	030605	5MVSMF	





Technical data

Version	Miniature ball valves from brass hexagonal bar series MVS									
Code	030501	030502	030503	030504	030505	030601	030602	030603	030604	030605
Item	1MVSFF	2MVSFF	3MVSFF	4MVSFF	5MVSFF	1MVSMF	2MVSMF	3MVSMF	4MVSMF	5MVSMF
Size	1/8”	1/4”	3/8”	1/2”	3/4”	1/8”	1/4”	3/8”	1/2”	3/4”
Fluid	Filtered compressed air with or without lubrication.									
Pressure range	0 ÷ 10 bar									
Temperature range	-10°C ÷ +90°C									
Orifice	8 mm			10 mm	13,5 mm	8 mm			10 mm	13,5 mm
Lever color	Black									
Mounting	In-line									

Standard materials

Description	Material
Body	Nickel-plated brass
Lever	Nylon 66 renforced glass
Ball	Nickel-plated brass
Seals	PTFE - NBR

Code key

Size	Series	Configuration
1	**MVS**	**FF**
1 = 1/8” 2 = 1/4” 3 = 3/8” 4 = 1/2” 5 = 3/4”	MVS	FF = Female-Female MF = Male-Female

How to order

Size	Series	Configuration
1	**MVS**	**FF**

Standard dimensions

Type: **FF**

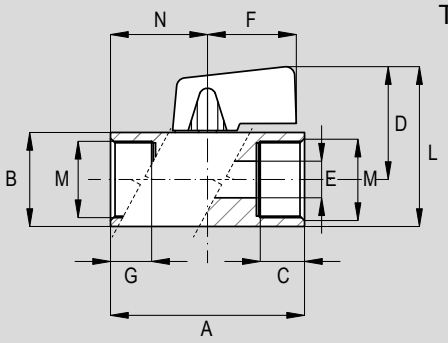

Type: **MF**

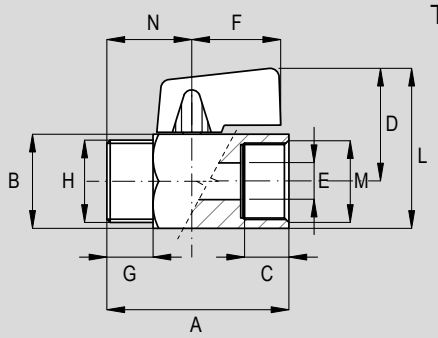

Code	Item	Size		A	B	C	D	E	F	G	L	N
		M	H									
030501	1MVSFF	G1/8”	-	39	20	7,5	27	8	22	7,5	37	18
030502	2MVSFF	G1/4”	-	39	20	9	27	8	22	7,5	37	18
030503	3MVSFF	G3/8”	-	42	20	10	27	8	22	10	37	21
030504	4MVSFF	G1/2”	-	47	24	12	29,5	10	22	10	41	21
030505	5MVSFF	G3/4”	-	54	30	12	32	13,5	22	11	47	27
030601	1MVSMF	G1/8”	G1/8”	39	20	8,5	27	8	22	7	37	18
030602	2MVSMF	G1/4”	G1/4”	39	20	9	27	8	22	8	37	18
030603	3MVSMF	G3/8”	G3/8”	40	20	10	27	8	22	8	37	19
030604	4MVSMF	G1/2”	G1/2”	45	24	12	29,5	10	22	10	41,5	21
030605	5MVSMF	G3/4”	G3/4”	51	30	12	32	13,5	22	12	47	24

Main features

Version	Code	Item	Symbol
1/8” female-female	030641	11MSFF	
1/4” female-female	030642	22MSFF	
1/8” male-female	030643	11MSMF	
1/4” male - 1/8” female	030644	21MSMF	
1/4” male-female	030645	22MSMF	
3/8” male - 1/4” female	030646	32MSMF	



Technical data

Version	Miniature ball valves with cast body series MS					
Code	030641	030642	030643	030644	030645	030646
Item	11MSFF	22MSFF	11MSMF	21MSMF	22MSMF	32MSMF
Male thread	-	-	1/8”	1/4”	1/4”	3/8”
Female thread	1/8”	1/4”	1/8”	1/8”	1/4”	1/4”
Fluid	Filtered compressed air with or without lubrication.					
Pressure range	0 ÷ 10 bar					
Temperature range	-10°C ÷ +90°C					
Orifice	5,5 mm					
Lever color	Black					
Mounting	In-line					

Standard materials

Description	Material
Body	Nickel-plated brass
Lever	Nylon 66 renforced glass
Ball	Nickel-plated brass
Seals	PTFE - NBR

Code key

Size	Series	Configuration
11	**MS**	**FF**
11 = 1/8”	MS	FF = Female-Female
21 (1) = 1/4” M - 1/8" F		MF = Male-Female
22 = 1/4”		
32 (1) = 3/8” M - 1/4" F		

How to order

Size	Series	Configuraz.
11	**MS**	**FF**

Notes

For standard materials see table at page 2.254.1

Options in the same grid are alternative to each others.

(1) Size available only for configuration Male-Female (MF) .

Standard dimensions

Type: **FF**

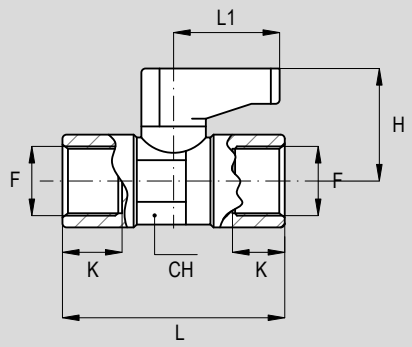

Type: **MF**

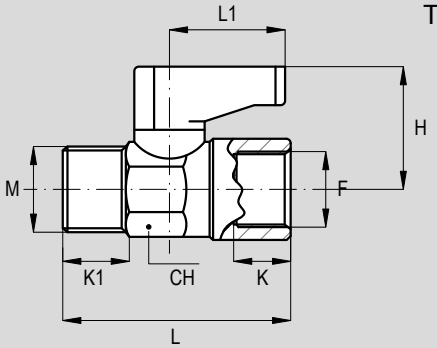

Code	Item	M	F	K	K1	L	L1	H	CH
030641	11MSFF	-	1/8”	8	-	36.5	19	21	14
030642	22MSFF	-	1/4”	11	-	43	19	21	14
030643	11MSMF	1/8”	1/8”	8	8	35.5	19	21	14
030644	21MSMF	1/4”	1/8”	8	11	36	19	21	14
030645	22MSMF	1/4”	1/4”	11	11	41	19	21	14
030646	32MSMF	3/8”	1/4”	11	11.5	41.5	19	21	14

Main features

Version	Code	Item	Symbol
1/4”	030661	VSLO014FF	
3/8”	030662	VSLO038FF	
1/2”	030663	VSLO012FF	
3/4”	030664	VSLO034FF	
1”	030665	VSLO100FF	
1 1/4”	030666	VSLO114FF	
1 1/2”	030667	VSLO112FF	
2”	030668	VSLO200FF	



Technical data

Version	Ball valve "full bore" series VSLO							
Code	030661	030662	030663	030664	030665	030666	030667	030668
Item	VSLO014FF	VSLO038FF	VSLO012FF	VSLO034FF	VSLO100FF	VSLO114FF	VSLO112FF	VSLO200FF
Size	1/4”	3/8”	1/2”	3/4”	1”	1 1/4”	1 1/2”	2”
Fluid	Compressed air, inert gases, non-aggressive fluids							
Pressure range	40 bar		32 bar		25 bar	20 bar		16 bar
Temperature range	-15°C ÷ +100°C							
Orifice	10 mm		15 mm	20 mm	25 mm	32 mm	40 mm	50 mm
Flow rate	3.000 l/min.		11.500 l/min.	21.000 l/min.	33.000 l/min.	50.000 l/min.	84.000 l/min.	97.000 l/min.
Mounting	In-line							

Standard materials

Description	Material
Body	Nickel-plated brass
Lever	Aluminium covered with polyurethane
Ball	Nickel-plated brass
Seals	PTFE - NBR

Code key

Series	Size	Configuration
VSLO	**012**	**FF**

- Series: VSLO
- Size:
  - 014 = 1/4”
  - 038 = 3/8”
  - 012 = 1/2”
  - 034 = 3/4”
  - 100 = 1”
  - 114 = 1 1/4”
  - 112 = 1 1/2”
  - 200 = 2”
- Configuration: FF = Female-Female

How to order

Series	Size	Configuration
VSLO	**012**	**FF**

Standard dimensions

Type: **VSLO**

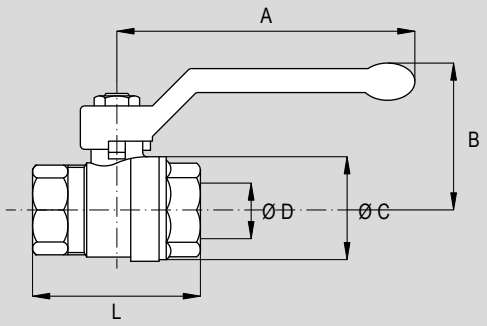

Code	Item	Size	Ø D	A	B	Ø C	L	Weight (g)
030661	VSLO014FF	1/4”	10	85	42	23	37	100
030662	VSLO038FF	3/8”	10	85	42	24	42	120
030663	VSLO012FF	1/2”	15	85	46	30	50	160
030664	VSLO034FF	3/4”	20	105	53	38	58	285
030665	VSLO100FF	1”	25	105	57	46	69	450
030666	VSLO114FF	1 1/4”	32	130	70	58	81	820
030667	VSLO112FF	1 1/2”	40	130	76	70	93	1280
030668	VSLO200FF	2”	50	165	92	86	110	2050

Main features

Version	Code	Item	Symbol
M5	030806	7VSR	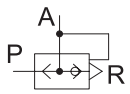
1/8”	030801	1VSR	
1/4”	030802	2VSR	
3/8”	030803	3VSR	
1/2”	030804	4VSR	
3/4”	030805	5VSR	
3/4” maxi	030807	5VSRM	
1” maxi	030808	6VSRM	





Technical data

Version	Quick exhaust valves series VSR							
Code	030806	030801	030802	030803	030804	030805	030807	030808
Item	7VSR	1VSR	2VSR	3VSR	4VSR	5VSR	5VSRM	6VSRM
Size	M5	1/8”	1/4”	3/8”	1/2”	3/4”	3/4”	1”
Fluid	Filtered compressed air with or without lubrication							
Pressure range	1 ÷ 10 bar							
Temperature range	-20°C ÷ +70°C (standard) -10°C ÷ +150°C (V) -25°C ÷ +70°C (BT)							
Orifice	4 mm	6 mm	8,5 mm		15 mm	18 mm	24 mm	
Flow from P to A (at 6 bar)*	310 Nl/min.	1.170 Nl/min.	3.200 Nl/min.	3.600 Nl/min.	5.900 Nl/min.	3.100 Nl/min.	-	
Flow from A to R (at 6 bar)*	310 Nl/min.	1.400 Nl/min.	3.300 Nl/min.	3.780 Nl/min.	7.500 Nl/min.	6.300 Nl/min.	-	
Mounting	Preferably directly on the cylinder port							

* At 3 bar for size 3/4"

Standard materials

Description	Material							
	7VSR	1VSR	2VSR	3VSR	4VSR	5VSR	5VSRM	6VSRM
Body	Nickel-plated brass							
Diaphragm	NBR	PU						
Washer	Hytrel 55 D							

For spare parts see page 2.260.2

Code key

Size	Series	Seals option	Thread option
2	**VSR**	**V**	
7 = M5	VSR (1)	V = High temperatures (-10°C ÷ +150°C)	NPT = NPT threaded
1 = 1/8”	VSRM (2)	BT = Low temperaures (-25°C ÷ +70°C)	
2 = 1/4”			
3 = 3/8”			
4 = 1/2”			
5 = 3/4”			
6 = 1”			

How to order

Size	Series	Seals	Thread
2	**VSR**	**V**	

Notes

For standard materials see table at page 2.260.1

Options in the same grid are alternative to each others.

(1) Series VSR available from size M5 (7) up to size 3/4" (5).

(2) Series VSR Maxi (VSRM) available only for sizes 3/4" (5) e 1" (6).

Spare parts kits

Valve code	Valve item	Valve size	PU diaphragm code	FKM diaphragm code	Washer code	Standard seals kit code	High temp. seals kit code
030806	7VSR	M5	030906	-	030913	-	-
030801	1VSR	1/8”	030901	030909	038018	038061	038062
030802	2VSR	1/4”	030902	030903	038019	038063	038064
030803	3VSR	3/8”	030902	030903	038019	038063	038064
030804	4VSR	1/2”	030904	030910	038020	038065	038066
030805	5VSR	3/4”	030905	030908	038021	038067	038068
030807	5VSRM	3/4”	030907	030911	038026	038069	038070
030808	6VSRM	1"	030907	030911	038026	038069	038070

Standard dimensions

Type: **VSR**
VSRM

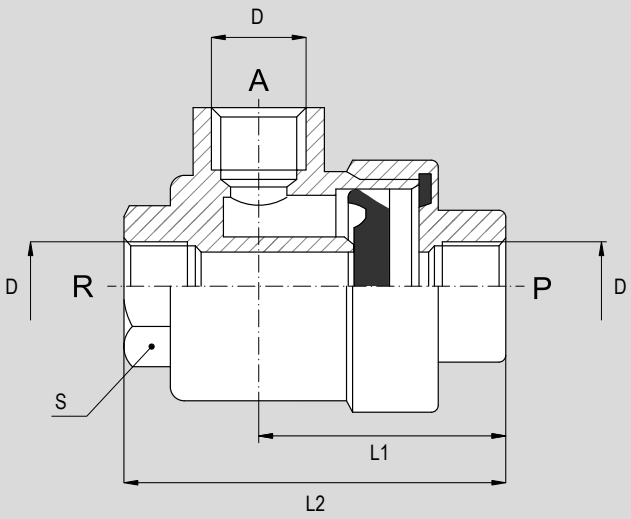

Code	Item	Size	D	L1	L2	S
030806	7VSR	M5	M5	17	25	10
030801	1VSR	1/8”	1/8”	30	46	14
030802	2VSR	1/4”	1/4”	35	53	17
030803	3VSR	3/8”	3/8”	37	57	21
030804	4VSR	1/2”	1/2”	45	73	26
030805	5VSR	3/4”	3/4”	55	90	32
030807	5VSRM	3/4”	3/4”	71	110	46
030808	6VSRM	1”	1”	71	110	46

Important note

The valve must be directly mounted on the port of the cylinder to achieve the maximum possible speed.
When the supply is in **P** the diaphragm closes the exhaust **R** and so the air flows through **A** into the chamber of the cylinder. When the supply **P** fails the diaphragm get back in its orginal position (closing **P**) due to the exhaust air from **A** to **R**. The noise of the exhaust **R** can be reduced by a silencer (for silencers see from page 4.150.1)

Main features

Version	Code	Item	Symbol
M5	030101	7FF	
1/8”	030102	1FF	
1/4”	030103	2FF	
3/8”	030104	3FF	
1/2”	030105	4FF	
3/4”	030107	5FF	
1”	030117	6FF	

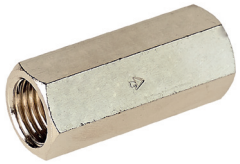

Technical data

Version	Unidirectional valves series FF						
Code	030101	030102	030103	030104	030105	030107	030117
Item	7FF	1FF	2FF	3FF	4FF	5FF	6FF
Female thread	M5	1/8	1/4”	3/8”	1/2”	3/4”	1”
Fluid	Filtered compressed air with or without lubrication.						
Pressure range	2 ÷ 10 bar						
Temperature range	-10°C ÷ +60°C (standard) -10°C ÷ +150°C (V)			-10°C ÷ +150°C		-10°C ÷ +60°C (standard) -10°C ÷ +150°C (V)	
Orifice	2,2 mm	5,2 mm	7 mm	10 mm	12 mm	18 mm	24 mm
Flow (at 6 bar)*	100 Nl/min.	500 Nl/min.	900 Nl/min.	2.600 Nl/min.	3.500 Nl/min.	3100 Nl/min.	-
Mounting	In-line						

* At 3 bar for size 3/4"

Standard materials

Description	Material						
	7FF	1FF	2FF	3FF	4FF	5FF	6FF
Body	Nickel-plated brass					Brass (not plated)	
Internal parts	Brass						
Spring	Stainless Steel						
Washer	NBR			FKM		NBR	

Code key

Size	Series	Garnizioni
2	**FF**	**V**
7 = M5	FF	V (1) = FKM (-10°C ÷ +150°C)
1 = 1/8”		
2 = 1/4”		
3 = 3/8”		
4 = 1/2”		
5 = 3/4”		
6 = 1”		

How to order

Size	Series	Seals
2	**FF**	**V**

Notes

For standard materials see table at page 2.263.1

Options in the same grid are alternative to each others.

(1) Standard seals in FKM for sizes 3/8" and 1/2"

Standard dimensions

Type: **FF**

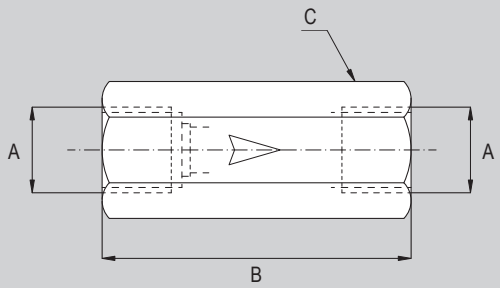

Code	Item	A (size)	B	C
030101	7FF	M5	25	8
030102	1FF	1/8”	34	13
030103	2FF	1/4”	39	16
030104	3FF	3/8”	50	21
030105	4FF	1/2”	60	25
030107	5FF	3/4”	42	30
030117	6FF	1”	47	41

Main features

Version	Code	Item	Symbol
1/8"	030951	1VS	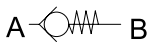
1/4"	030952	2VS	
3/8"	030953	3VS	
1/2"	030954	4VS	
3/4"	030955	5VS	
1"	030956	6VS	



Technical data

Version	Safety valves (adjustable) series VS					
Code	030951	030952	030953	030954	030955	030956
Item	1VS	2VS	3VS	4VS	5VS	6VS
Female thread	1/8"	1/4"	3/8"	1/2"	3/4"	1"
Fluid	Filtered compressed air with or without lubrication. Lubrication, if started, must be continued.					
Pressure range	3 ÷ 7 bar					
Temperature range	-10°C ÷ +90°C					
Orifice	6 mm		10 mm	11 mm	18 mm	
Flow	1.600 l/min.		3.400 l/min.	3.700 l/min.	7.900 l/min.	
Mounting	In line					

Standard materials

Description	Material
Body	Brass
Poppet	Brass
Adjusting screw	Brass
Nut	Brass
Spring	Steel C 98
Seal	NBR

Code key

Size	Series	Option
3	**VS**	

Size	Series	Option
1 = 1/8”	VS	CCTF..(1) = Fixed calibration with certificate according 97/23/EC Directive. ISPESL on request
2 = 1/4”		
3 = 3/8”		
4 = 1/2”		
5 = 3/4”		
6 = 1”		

Notes

For standard materials see the table at page 2.265.1

Options in the same grid are alternative to each others.

(1) The certified valve is available with fixed calibration only. After the option suffix, please specify the required calibration in bar, as in the "how to order" table below.

Special version on request, add **/S** suffix at the end of the coding.

How to order series VS standard*

Size	Series
3	VS

How to order series VS with option CCTF and fixed calibration at 11bar

Size	Series	Option
3	VS	CCTF11

*Adjustable 3 ÷ 7bar

Standard dimensions**

Type: **VS**

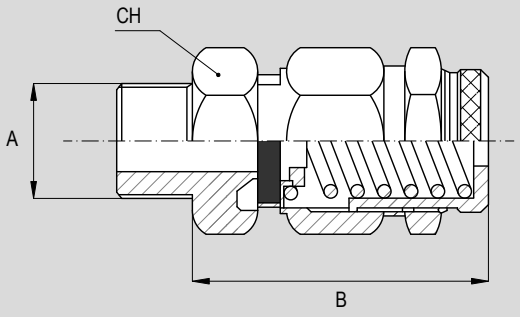

Code	Item	A (size)	B	CH
030951	1VS	1/8”	34	15
030952	2VS	1/4”	34	15
030953	3VS	3/8”	53	20
030954	4VS	1/2”	53	22
030955	5VS	3/4”	70	30
030956	6VS	1”	70	30

**For overall dimensions of valves with option CC.., please contact the sales department

Notes

COILS



Find out our
key products

- **Solution for most applications**
- **Easy and intuitive choice**
- **Excellent value for money**
- **Wide availability**
- **Fast delivery**

Features and certifications

Coils for solenoid operated valves. Available in size 22 mm and 30 mm, in different voltages. For plungers Ø 9mm, Ø 10mm and Ø 13mm.
Supplied as standard conforming to CE, UKCA, EAC, EN, VDE and DIN standards, and also supplied as standard in compliance to Reach and RoHS directives.
Connectors to be ordered separately.

Series ASA12

from page 2.315.10



Series of 22 mm coils with low electrical consumption, conforming to EN 60204 and VDE 0580 standards (in compliance with UKCA and EAC standard as well), insulation class F, class protection IP65.
Available in voltages 12 and 24 V DC, and in voltages 12, 24, 48, 110 and 230 V AC.
For Ø 9 mm plunger.
Connector to be ordered separately.

Series ASA2

from page 2.315.11



Series of 30 mm coils with low electrical consumption, conforming to EN 60204.1 and VDE 0580 standards (in compliance with UKCA and EAC standard as well), insulation class F, class protection IP65.
Available in voltages 12 and 24 V DC, and in voltages 12, 24, 48, 110 and 230 V AC.
For Ø 9 mm plunger.
Connector to be ordered separately.

Series ASA33

from page 2.315.12



Series of 22 mm coils conforming to DIN 43650 standards (in compliance with UKCA and EAC standard as well), insulation class F, class protection IP65.
Available in voltages 12 and 24 V DC, and in voltages 12, 24, 48, 110 and 230 V AC.
For Ø 10 mm plunger.
Connector to be ordered separately.

Series ASA32

from page 2.315.13



Series of 30 mm coils conforming to DIN 43650/A standard (in compliance with UKCA and EAC standard as well), insulation class F, class protection IP65.
Available in voltages 12 and 24 V DC, and in voltages 12, 24, 48, 110 and 230 V AC.
For Ø 13 mm plunger.
Connector to be ordered separately.

Series ASA34

from page 2.315.14



Series of 30 mm coils conforming to EN 175301-803-A, form A, insulation class F, class protection IP65.
Available in voltages 24 V DC, and in voltages 24, 110 and 240 V AC.
For Ø 13 mm plunger.
Connector to be ordered separately.

Code key

Series	Size	Voltage
ASA	**12**	**02400**
ASA	12 (1) = 22 mm	012 = 12 V
	33 (1) = 22 mm	024 = 24 V
	2 (1) = 30 mm	048 = 48 V
	32 (1) = 30 mm	110 = 110 V
	34 (2) = 30 mm	230 = 230 V
		240 = 240 V
		00 = DC
		50 = AC

How to order

Series	Size	Voltage	
ASA	**12**	**024**	**00**

Notes

Options in the same grid are alternative to each others.
For available matching between coils and valves, and between coils and connectors, please see the table below.
For ATEX coils and connectors, in different classifications, see page 2.320.1
(1) Available in voltage 12 and 24 V DC, and in voltage 12, 24, 48, 110 and 230 V AC.
(2) Available in voltage 24 V DC, and in voltage 24, 110 and 240 V AC.

Matching with valves

Valves series		Coils series					See page
		ASA12..	ASA2..	ASA33..	ASA32..	ASA34..	
AE05..		-	-	-	-	-	2.5.1
A1EM..		●	●	-	-	-	2.12.10
A1E..MD		●	-	-	-	-	2.14.10
A1E.. A1K..		●	●	-	-	-	2.20.1
A1NE..		●	●*	-	-	-	2.44.1
ISO1E..		●	●	-	-	-	2.91.30
ISO1EL..		●	●	-	-	-	2.92.30
ISO2..		●	●	-	-	-	2.94.30
AEF.. AEC..		●	●	-	-	-	2.130.1
AEN22.. AEV22.. AEP22..	1/4" ÷ 1"	-	-	●	-	-	2.120.1
	1 1/4" ÷ 2"	-	-	-	●	-	
AVP..E		●	●	-	-	-	3.20.1
AX1E.. AX1K..		●	●	-	-	-	5.102.1
AX1EG.. AX1KG..		-	-	-	-	●	
AX1NE..		●	●	-	-	-	5.120.1
AX1NEG..		-	-	-	-	●	

* Plate type PSN required, see page 2.56.10

Matching with connectors

Connectors series	Coils series					See page
	ASA12..	ASA2..	ASA33..	ASA32..	ASA34..	
A192..	-	-	-	-	-	2.318.10
A122..	●	-	●	-	-	2.318.12
A182..	-	●	-	●	●	2.318.14

Key
● allowed matching; - not allowed matching

Main features

Series	Voltage	Code	Item
ASA12	12 V DC	032100	ASA1201200
	12 V AC	032101	ASA1201250
	24 V DC	032102	ASA1202400
	24 V AC	032103	ASA1202450
	48 V AC	032104	ASA1204850
	110 V AC	032105	ASA1211050
	230 V AC	032106	ASA1223050



Technical data

Series	ASA12						
Code	032100	032101	032102	032103	032104	032105	032106
Item	ASA1201200	ASA1201250	ASA1202400	ASA1202450	ASA1204850	ASA1211050	ASA1223050
Voltage	12 V DC	12 V AC	24 V DC	24 V AC	48 V AC	110 V AC	230 V AC
Frequency	-	50/60 Hz	-	50/60 Hz			
Size	22 mm						
Plunger Ø	9 mm						
Compliance	EN 60204 e VDE 0580						
Current	Direct	Alternating	Direct	Alternating			
Voltage tolerance	±10%						
Frequency tolerance	-	± 5%	-	± 5%			
Electrical consumption	3 W	4.2 VA	3 W	4.2 VA			
Duty cycle	100% ED						
Class protection*	IP 65						
Temperature range	-20°C ÷ +50°C			-20°C ÷ +40°C	-20°C ÷ +50°C		
Response time	10 ms.						
Matching	see page 2.230.3						

* With connector already mounted. For connectors type see page 2.318.1

Standard dimensions

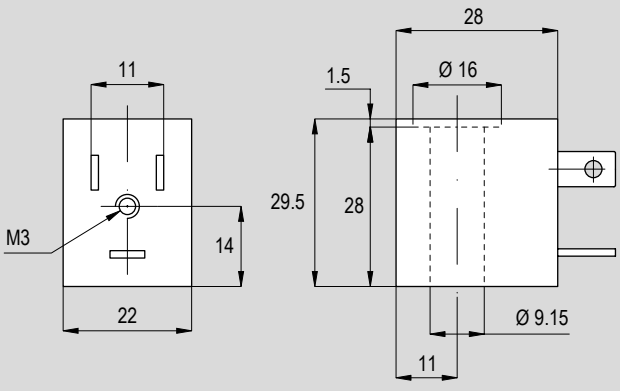

Main features

Series	Voltage	Code	Item
ASA2	12 V DC	032109	ASA201200
	12 V AC	032110	ASA201250
	24 V DC	032111	ASA202400
	24 V AC	032112	ASA202450
	48 V AC	032113	ASA204850
	110 V AC	032114	ASA211050
	230 V AC	032115	ASA223050



Important notes

For sub-base mounting, the option P32 (wide pitch 32 mm) is required, see page 2.305.3

With valve bodies type A1NE, plate type PSN is required, see page 2.56.10

Technical data

Series	ASA2						
Code	032109	032110	032111	032112	032113	032114	032115
Item	ASA201200	ASA201250	ASA202400	ASA202450	ASA204850	ASA211050	ASA223050
Voltage	12 V DC	12 V AC	24 V DC	24 V AC	48 V AC	110 V AC	230 V AC
Frequency	-	50/60 Hz	-	50/60 Hz			
Size	30 mm						
Plunger Ø	9 mm						
Compliance	EN 60204.1 e VDE 0580						
Current	Direct	Alternating	Direct	Alternating			
Voltage tolerance	±10%	-10% ÷ +15%	±10%	-10% ÷ +15%			
Frequency tolerance	-	± 5%	-	± 5%			
Electrical consumption	2.5 W	5 VA	2.5 W	5 VA			
Duty cycle	100% ED						
Class protection*	IP 65						
Insulation class	F						
Temperature range	-20°C ÷ +50°C			-20°C ÷ +40°C	-20°C ÷ +50°C		
Response time	10 ms.						
Matching	see page 2.230.3						

* With connector already mounted. For connectors type see page 2.318.1

Standard dimensions

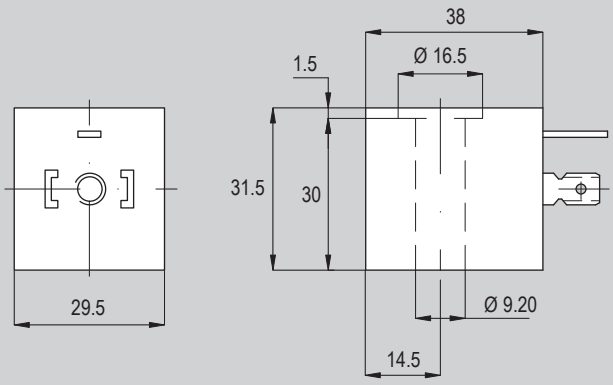

Main features

Series	Voltage	Code	Item
ASA33	12 V DC	034311	ASA3301200
	12 V AC	034312	ASA3301250
	24 V DC	034313	ASA3302400
	24 V AC	034314	ASA3302450
	48 V AC	034315	ASA3304850
	110 V AC	034316	ASA3311050
	230 V AC	034317	ASA3323050



Technical data

Series	ASA33						
Code	034311	034312	034313	034314	034315	034316	034317
Item	ASA3301200	ASA3301250	ASA3302400	ASA3302450	ASA3304850	ASA3311050	ASA3323050
Voltage	12 V DC	12 V AC	24 V DC	24 V AC	48 V AC	110 V AC	230 V AC
Frequency	-	50/60 Hz	-	50/60 Hz			
Size	22 mm						
Plunger Ø	10 mm						
Compliance	DIN 43650						
Current	Direct	Alternating	Direct	Alternating			
Voltage tolerance	±10%	-10% ÷ +15%	±10%	-10% ÷ +15%			
Frequency tolerance	-	± 5%	-	± 5%			
Electrical consumption	6.5 W	8 VA	6.5 W	8 VA			
Duty cycle	100% ED						
Class protection*	IP 65						
Insulation class	F						
Temperature range	-10°C ÷ +55°C			-10°C ÷ +40°C	-10°C ÷ +55°C		
Response time	10 ms.						
Matching	see page 2.230.3						

* With connector already mounted. For connectors type see page 2.318.1

Standard dimensions

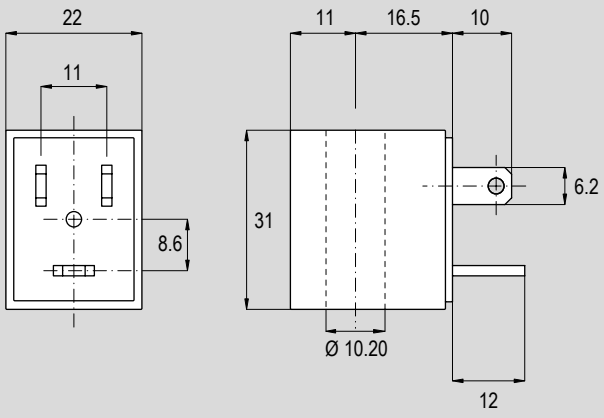

Main features

Series	Voltage	Code	Item
ASA32	12 V DC	034321	ASA3201200
	12 V AC	034322	ASA3201250
	24 V DC	034323	ASA3202400
	24 V AC	034324	ASA3202450
	48 V AC	034325	ASA3204850
	110 V AC	034326	ASA3211050
	230 V AC	034327	ASA3223050



Technical data

Series	ASA32						
Code	034321	034322	034323	034324	034325	034326	034327
Item	ASA3201200	ASA3201250	ASA3202400	ASA3202450	ASA3204850	ASA3211050	ASA3223050
Voltage	12 V DC	12 V AC	24 V DC	24 V AC	48 V AC	110 V AC	230 V AC
Frequency	-	50/60 Hz	-	50/60 Hz			
Size	30 mm						
Plunger Ø	13 mm						
Compliance	DIN 43650/A						
Current	Direct	Alternating	Direct	Alternating			
Voltage tolerance	±10%	-10% ÷ +15%	±10%	-10% ÷ +15%			
Frequency tolerance	-	± 5%	-	± 5%			
Electrical consumption	10 W	15 VA	10 W	15 VA			
Duty cycle	100% ED						
Class protection*	IP 65						
Insulation class	F						
Temperature range	-10°C ÷ +55°C			-10°C ÷ +40°C	-10°C ÷ +55°C		
Response time	10 ms.						
Matching	see page 2.230.3						

With connector already mounted. For connectors type see page 2.318.1

Standard dimensions

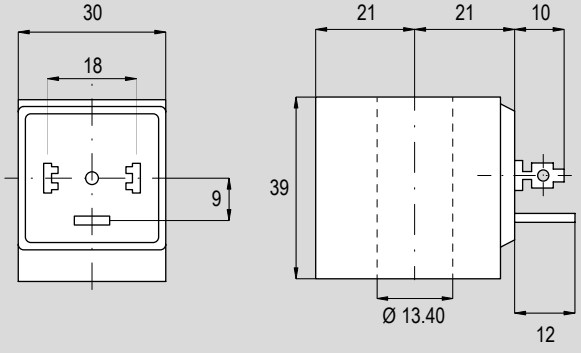

Main features

Series	Voltage	Code	Item
ASA34	24 V DC	034341	ASA3402400
	24 V AC	034340	ASA3402450
	110 V AC	034342	ASA3411050
	240 V AC	034343	ASA3424050



Technical data

Series	ASA34			
Code	034341	034340	034342	034343
Item	ASA3402400	ASA3402450	ASA3411050	ASA3424050
Voltage	24 V DC	24 V AC	110 V AC	240 V AC
Frequency	-	50 Hz		
Size	30 mm			
Plunger Ø	13 mm			
Compliance	EN 175301-803-A, form A			
Current	Direct	Alternating		
Voltage tolerance	±10%			
Electrical consumption	15 W	19.3 VA	17.6 VA	
Duty cycle	100% ED			
Class protection*	IP 65 (conforming to EN60529 standards)*			
Insulation class	F (conforming to DIN VDE 60524 standards)			
Temperature range	-20°C ÷ +50°C	-20°C ÷ +40°C	-20°C ÷ +50°C	
Matching valves	see page 2.230.3			

* With connector already mounted. For connectors type see page 2.318.1

Standard dimensions

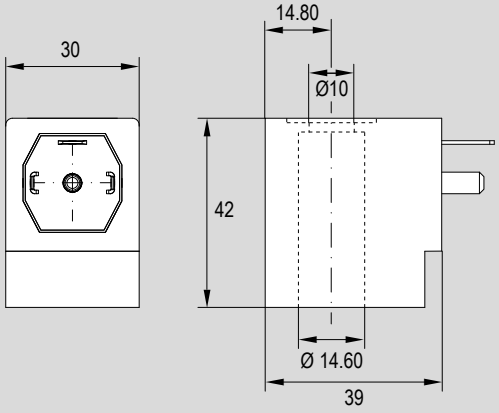

CONNECTORS



Find out our
key products

- **Solution for most applications**
- **Easy and intuitive choice**
- **Excellent value for money**
- **Wide availability**
- **Fast delivery**

Features and certifications

Connectors for coils for solenoid operated valves. Available in size 15 mm, 22 mm and 30 mm, in different versions and voltages.
Supplied as standard conforming to EN VDE and DIN standards, and also supplied as standard in compliance to Reach and RoHS directives.
Coils to be ordered separately.

Series A192

from page 2.318.10



Series of 15 mm connectors, insulation class VDE 0110 - 1/89, class protection IP65 EN 60529.
Available in version black standard, cabled black standard and transparent in various voltages with VDR and LED, and cabled black in various voltage with VDR and LED.
Supplied complete of mounting screw and profiled NBR seal.
For valves series AE05..

Series A122

from page 2.318.12



Series of 22 mm connectors conforming to DIN 43 650 standards, insulation class VDE 0110 - 1/89, class protection IP65 EN 60529.
Available in version black standard, cabled black standard and transparent in various voltages with VDR and LED, and cabled black in various voltages with VDR and LED.
Supplied complete of mounting screw and profiled NBR seal.
Coils type ASA12 and ASA33, to be ordered separately.

Series A182

from page 2.318.14



Series of 30 mm connectors conforming to DIN 43650 - A/ISO 4400 standards, insulation class VDE 0110 - 1/89, class protection IP65 EN 60529.
Available in version black standard, cabled black standard and transparent in various voltages with VDR and LED, and cabled black in various voltages with VDR and LED.
Supplied complete of mounting screw and profiled NBR seal.
Coils type ASA2, ASA32 and ASA 34, to be ordered separately.

Code key

Series	Size	Color	Circuit	Cabling
A	**122**	**N**	**1**	**K**
A	192 = 15 mm 122 = 22 mm 182 = 30 mm	N = Black T = Transparent	= Without circuit 1 = LED+VDR 24 V AC/DC 2 = LED+VDR 115 V AC/DC 3 = LED+VDR 230 V AC/DC	= Not cabled K (1) = Cabled

How to order

Series	Size	Color	Circuit	Cabling
A	**122**	**N**	**1**	**K**

Notes

Options in the same grid are alternative to each others

For standard materials see the data sheet of single components.

For possible matching with valves and coils, see the tables below.

For ATEX coils and connectors, in different classifications, see page 2.320.1

(1) Cabled connector available only in combinations with color black option (N) and circuits 1, 2 or 3.

Matching with valves

Valves series	Connector series			See page
	A192..	A122..	A182..	
AE05..	●	-	-	2.5.1

Key

● allowed matching; - not allowed matching

Matching with coils

Coil series	Connector series			See page
	A192..	A122..	A182..	
ASA12..	-	●	-	2.315.10
ASA2..	-	-	●	2.315.11
ASA32..	-	-	●	2.315.13
ASA33..	-	●	-	2.315.12
ASA34..	-	-	●	2.315.14

Main features

Series	Version	Code	Item
A192	Black standard (without circuit)	032117	A19207N
	Transparent with VDR+LED, 24 V, AC-DC	032201	A19207T1
	Transparent with VDR+LED, 115 V, AC-DC	032202	A19207T2
	Transparent with VDR+LED, 230 V, AC-DC	032203	A19207T3
	Cabled black standard (without circuit)	033511	A19207NK
	Cabled black with LED+VDR, 24 V, AC-DC	033512	A19207N1K
	Cabled black with LED+VDR, 115 V, AC-DC	033513	A19207N2K
	Cabled black with LED+VDR, 230 V, AC-DC	033514	A19207N3K



Technical data

Series	A192							
Code	032117	032201	032202	032203	033511	033512	033513	033514
Item	A19207N	A19207T1	A19207T2	A19207T3	A19207NK	A19207N1K	A19207N2K	A19207N3K
Voltage	All	24 V AC-DC	115 V AC-DC	230 V AC-DC	All	24 V AC-DC	115 V AC-DC	230 V AC-DC
Size	15 mm							
Contact distance	9.4 mm							
Nominal voltage	250 V AC max 300 V DC max	250 V			250 V			
Nominal current	6 A				-			
Maximum current on contacts	10 A				-			
Maximum current	-				3 A			
Contact resistance	≤ 4 m Ohm							
Maximum conductor section	0.75 mm^2				-			
Gland size	Pg 07				-			
Class protection	IP 65 EN 60529							
Insulation class	VDE 0110 - 1/89							
Temperature range	-40°C ÷ +90°C							
Earth contact (number)	1				2 connected (pos. 6/12)			
Poles number	2							
Cable length	-				2 mt.			
Cable material	-				Self-extinguishing polypropylene			
Cable color	-				Grey			
Wire color	-				Conforming to ENEL 0722 standards			
Cable external Ø	-				5.5 mm			
Cable insulation	-				300 V			
Cable temperature range	-				-5°C ÷ +70°C			
Cable standards	-				CEI 2022 II OR			
Wire section	-				3x0.5 mm^2			
Matching	Valves series AE05..							

Standard dimensions

Type: **A192N**
A192T

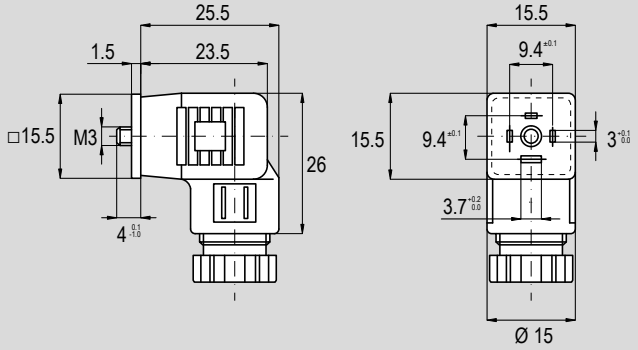

Type: **A192NK**
A192N..K

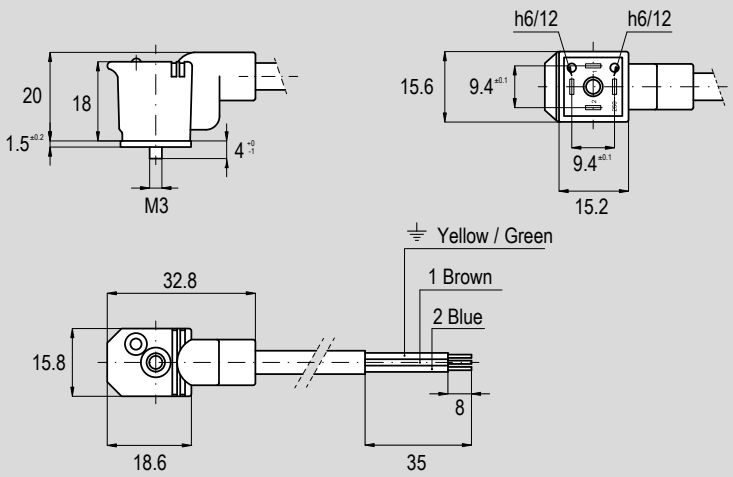

Main features

Series	Version	Code	Item
A122	Black standard (without circuit)	032118	A12209N
	Transparent with VDR+LED, 24 V, AC-DC	032204	A12209T1
	Transparent with VDR+LED, 115 V, AC-DC	032205	A12209T2
	Transparent with VDR+LED, 230 V, AC-DC	032206	A12209T3
	Cabled black standard (without circuit)	033521	A12209NK
	Cabled black with LED+VDR, 24 V, AC-DC	033522	A12209N1K
	Cabled black with LED+VDR, 115 V, AC-DC	033523	A12209N2K
	Cabled black with LED+VDR, 230 V, AC-DC	033524	A12209N3K



Technical data

Series	A122							
Code	032118	032204	032205	032206	033521	033522	033523	033524
Item	A12209N	A12209T1	A12209T2	A12209T3	A12209NK	A12209N1K	A12209N2K	A12209N3K
Voltage	All	24 V AC-DC	115 V AC-DC	230 V AC-DC	All	24 V AC-DC	115 V AC-DC	230 V AC-DC
Size	22 mm							
Contact distance	11 mm							
Nominal voltage	250 V AC max 300 V DC max	250 V			250 V			
Nominal current	10 A				-			
Maximum current on contacts	16 A				-			
Maximum current	-				5 A			
Contact resistance	≤ 4 m Ohm							
Maximum conductor section	1.5 mm^2				-			
Gland size	Pg 09				-			
Class protection	IP 65 EN 60529							
Insulation class	VDE 0110 - 1/89							
Temperature range	-40°C ÷ +90°C							
Earth contact (number)	1				2 connected (pos. 6/12)			
Poles number	2							
Cable length	-				2 mt.			
Cable material	-				Self-extinguishing polypropylene			
Cable color	-				Grey			
Wire color	-				Conforming to ENEL 0722 standards			
Cable external Ø	-				7.3 mm			
Cable insulation	-				300 V			
Cable temperature range	-				-5°C ÷ +70°C			
Cable standards	-				CEI 2022 II OR			
Wire section	-				3x1 mm^2			
Matching	Coils series ASA12.. and series ASA33..							

Standard dimensions

Type: **A122N**
A122T

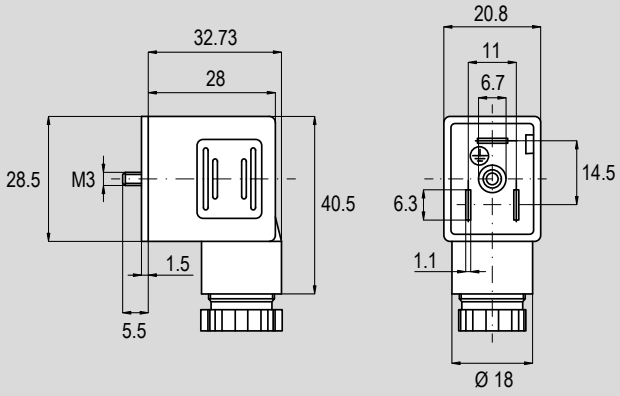

Type: **A122NK**
A122N..K

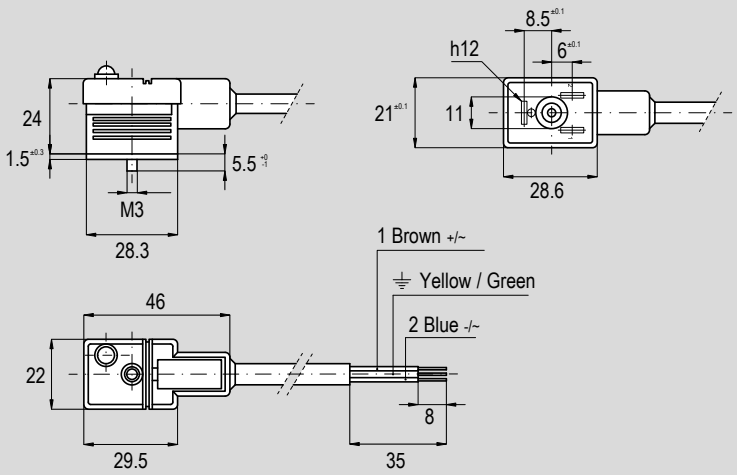

Main features

Series	Version	Code	Item
A182	Black standard (without circuit)	032119	A18209N
	Transparent with VDR+LED, 24 V, AC-DC	032207	A18209T1
	Transparent with VDR+LED, 115 V, AC-DC	032208	A18209T2
	Transparent with VDR+LED, 230 V, AC-DC	032209	A18209T3
	Cabled black standard (without circuit)	033531	A18209NK
	Cabled black with LED+VDR, 24 V, AC-DC	033532	A18209N1K
	Cabled black with LED+VDR, 115 V, AC-DC	033533	A18209N2K
	Cabled black with LED+VDR, 230 V, AC-DC	033534	A18209N3K



Technical data

Series	A182							
Code	032119	032207	032208	032209	033531	033532	033533	033534
Item	A18209N	A18209T1	A18209T2	A18209T3	A18209NK	A18209N1K	A18209N2K	A18209N3K
Voltage	All	24 V AC-DC	115 V AC-DC	230 V AC-DC	All	24 V AC-DC	115 V AC-DC	230 V AC-DC
Size	30 mm							
Contact distance	18 mm							
Nominal voltage	250 V AC max 300 V DC max	250 V			250 V			
Nominal current	10 A				-			
Maximum current on contacts	16 A				-			
Maximum current	-				3 A			
Contact resistance	≤ 4 m Ohm							
Maximum conductor section	1.5 mm^2				-			
Gland size	Pg 07				-			
Class protection	IP 65 EN 60529							
Insulation class	VDE 0110 - 1/89							
Temperature range	-40°C ÷ +90°C							
Earth contact (number)	1				2 connected (pos. 6/12)			
Poles number	2							
Cable length	-				2 mt.			
Cable material	-				Self-extinguishing polypropylene			
Cable color	-				Grey			
Wire color	-				Conforming to ENEL 0722 standards			
Cable external Ø	-				7.3 mm			
Cable insulation	-				300 V			
Cable temperature range	-				-5°C ÷ +70°C			
Cable standards	-				CEI 2022 II OR			
Wire section	-				3x1 mm^2			
Matching	Coils series ASA2.., series ASA32.. and series ASA34..							

Standard dimensions

Type: **A182N**
A182T

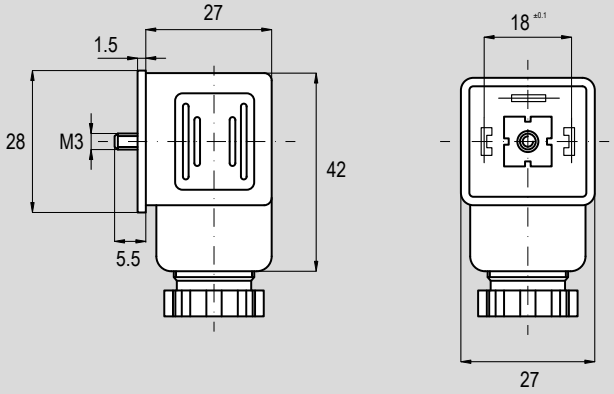

Type: **A182NK**
A182N..K

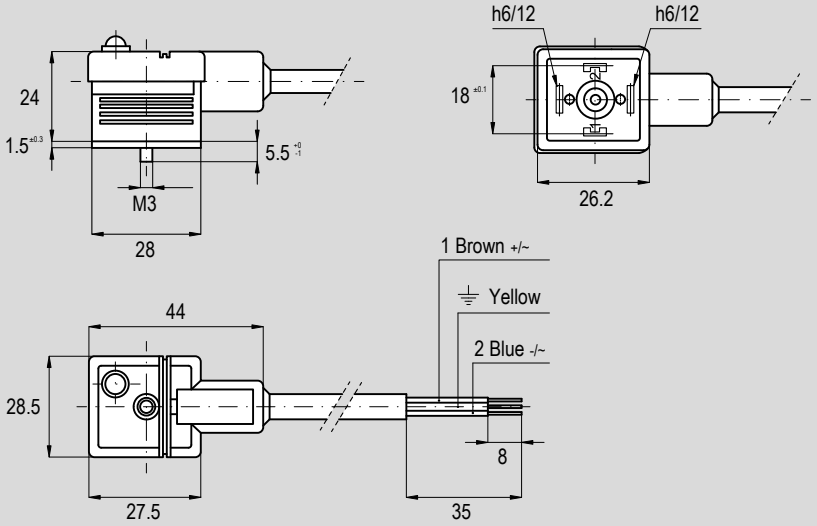

Notes

SOLENOID OPERATED

valves, ATEX coils and connectors



Find out our
key products

- **Solution for most applications**
- **Easy and intuitive choice**
- **Excellent value for money**
- **Wide availability**
- **Fast delivery**

Features and certifications

Solenoid operated valves for applications in potentially explosive atmospheres.
These solenoid operated vavles, supplied complete and already assembled with coil and connector, are conforming to 2014/34/EU Directive, available in classification Ex ia (intrinsic safety coil) or Ex d (explosion proof coil).
They are also compliant with Reach and RoHS directives, and SIL certifcated.

Complete solenoid operated valves conforming to ATEX Ex ia (valve body mounted with intrinsic safe coil) type XA

from page 2.321.1

Solenoid operated valves supplied complete and already mounted, composed by the desired valve body, 30 mm Ex ia intrinsic safety coil (voltage 21.6 ÷ 28 V DC) and compatible connector.
Conforming to 2014/34/EU ATEX Directive for applications in potentially explosive atmospheres, Group II, cat. 2 Gas & Powders, temperature class T6, protection grade IP65.
Ex ia coil can be matched with valve bodies series A1E, series A1NE and series ISO.



Complete solenoid operated valves conforming to ATEX Ex ia (valve body mounted with intrinsic safe coil) type XA1

from page 2.321.1

Solenoid operated valves supplied complete and already mounted, composed by the desired valve body, 30 mm Ex ia intrinsic safety coil (voltage 21.6 ÷ 28 V DC) and compatible connector.
Conforming to 2014/34/EU ATEX Directive for applications in potentially explosive atmospheres, Group II, cat. 2 Gas & Powders, temperature class T4, protection grade IP65.
Ex ia coil can be matched with valve bodies series A1E, series A1NE and series ISO.



Complete solenoid operated valves conforming to ATEX Ex d (valve body mounted with explosion proof coil) type XC

from page 2.322.1

Solenoid operated valves supplied complete and already mounted, composed by the desired valve body and explosion proof coil Ex d with integrated pilot, available in different voltages. Conforming to 2014/34/EU ATEX Directive for applications in potentially explosive atmospheres, Group II, cat. 2 Gas , temperature class T6.
Ex d coil can be matched with valve bodies series A1E and series A1NE.

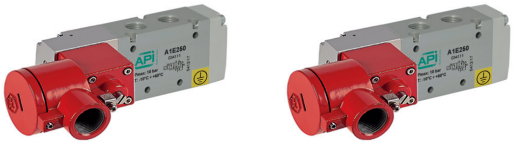

Solenoid operated valves, ATEX coils and connectors

Coils and connectors supplied separately

Caratteristiche e certificazioni

Coils and connectors to be combined with valve bodies (ATEX option required) for the configuration of solenoid operated valves suitable for applications in potentially explosive atmospheres. The solenoid valves configured in this way comply with the ATEX directive 2014/34/EU, in classification Ex ec (increased safety coil), Ex db mb (explosion-proof encapsulated coil) or Ex mb (encapsulated coil). They are also compliant with Reach and RoHS directives and SIL certified.
Valve bodies, coils and connectors are to be ordered separately.

Coils and connectors conforming to ATEX Ex ec (to be configured combining valve body with increased safety coil and connector) from page 2.325.1

Solenoid operated valves to be configured by combining the desired valve body (with body Atex option) with increased safety coil Ex ec type ASA12/ATEXII3 size 22 mm (available in various voltages) and connector type A12209N/ATEX size 22 mm
Thus configured, the solenoid operated valve comply with 2014/34/EU ATEX Directive for applications in potentially explosive atmospheres Group II, category 3 Gas and dust, temperature class T5, protection grade IP65.
Valve bodies, coils and connectors are be ordered separately.

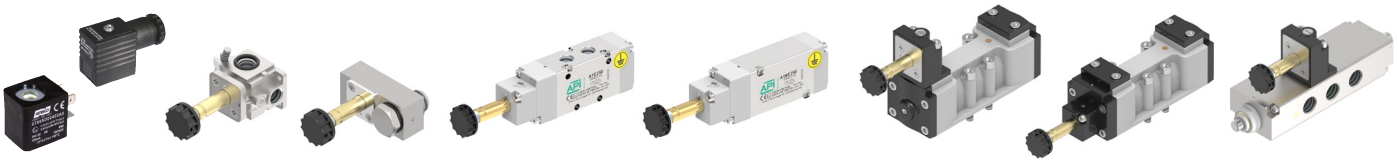

Coils conforming to ATEX Ex db mb (to be configured combining valve body with explosion proof encapsulated coil) from page 2.326.1

Solenoid operated valves to be configured by combining the desired valve body (with body Atex option) with explosion proof encapsulated coil Ex dm type ASA4/ATEXII2 size 36 mm with integrated connector.
Thus configured, the solenoid operated valve comply with 2014/34/EU ATEX Directive for applications in potentially explosive atmospheres Group II, category 2 Gas and dust, temperature class T5, protection grade IP66.
Valve bodies, coils and connectors are be ordered separately.

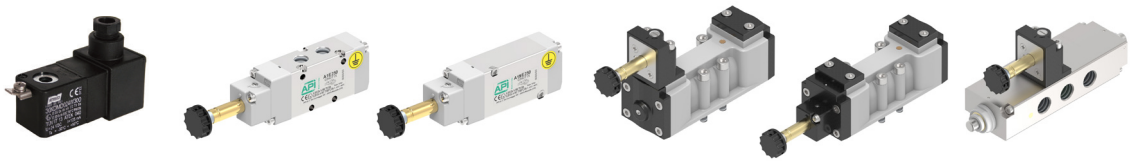

Coils conforming to ATEX Ex mb (to be configured combining valve body with encapsulated coil) from page 2.327.1

Solenoid operated valves to be configured by combining the desired valve body (with body Atex option) with encapsulated coil Ex mb type ASA2/ATEXII2 size 30 mm with integrated cabled connector (cable length 2 m) available in different voltages.
Thus configured, the solenoid operated valve comply with 2014/34/EU ATEX Directive for applications in potentially explosive atmospheres Group II, category 2 Gas and dust, temperature class T5, protection grade IP66.
Valve bodies, coils and connectors are be ordered separately.

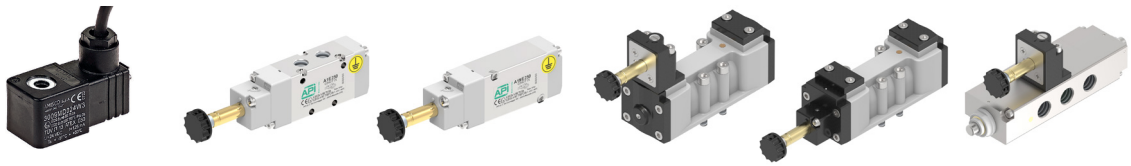

Types and configurations

Solenoid valve	Classification	Coil/Connector	Configuration
Ex ia (type XA)	CE Ex II 2G Ex ia IIC T6 Gb II 2D Ex tb IIIC T80°C Db X IP65		Solenoid operated valve supplied complete with Ex ia intrinsically safe coil and connector mounted, type XA. For possible matching with ATEX valve body see page the table below. For code key see from page 2.321.2 For dimensions see from page 2.321.4
Ex ia (type XA1)	CE Ex II 2G Ex ia IIC T4 Gb II 2D Ex tb IIIC T130°C Db X IP65		Solenoid operated valve supplied complete with Ex ia intrinsically safe coil and connector mounted, type XA1. For possible matching with ATEX valve body see page the table below. For code key see from page 2.321.2 For dimensions see from page 2.321.4
Ex d (type XC)	CE Ex II 2G Ex db IIC T6 Gb		Solenoid operated valve supplied complete with Ex d explosion proof coil with integrated pilot mounted, type XC. For possible matching with ATEX valve body see page the table below. For code key see page 2.322.2 For dimensions see from page 2.322.3

Matching coil/connector with valve body

Coil/Connector		II 2G Ex ia IIC T6 Gb II 2D Ex tb IIIC T80°C Db IP65 	II 2G Ex ia IIC T4 Gb II 2D Ex tb IIIC T130°C Db IP65 	II 2G Ex db IIC T6 Gb 
Valve body	Size	Supplied already mounted with valve body	Supplied already mounted with valve body	Supplied already mounted with valve body
A1E	1/8"	●	●	-
	1/4"	●	●	●
	1/2"	●	●	-
A1K	1/8"	●	●	-
	1/4"	●	●	-
	1/2"	●	●	-
A1NE	1/4"	●	●	●
ISO..E	ISO1	●	●	-
	ISO2	●	●	-
ISO..K	ISO1	●	●	-
	ISO2	●	●	-
ISO..EL	ISO1	●	●	-
ISO..KL		●	●	-

Key

● allowed matching; - not allowed matching

Solenoid operated valves, ATEX coils and connectors

Coils and connectors supplied separately

Types and configurations

Solenoid valve type	Classification	Coil/Connector	Configuration
EX ec	CE Ex II 3G Ex ec IIC T5 Gc II 3D Ex tc IIIC T95°C Dc IP65		To configure the solenoid valve, combine: • desired ATEX valve body, see from page 2.20.1 (for valves series A1), from page 2.44.1 (for valves series A1N), from page 2.90.1 (for ISO valves), from page 2.10.1 (for valves series A1EM and series A1E..MD) or from page 2.130.1 (for series AEF); • Coil type ASA12/ATEXII3, see page 2.325.2; • Connector type A12209N/ATEX, see page 2.325.3;
EX db mb	CE Ex II 2G Ex db mb IIC T5 Gb II 2D Ex tb IIIC T95°C Db IP66		To configure the solenoid valve, combine: • desired ATEX valve body, see from page 2.20.1 (for valves series A1), from page 2.44.1 (for valves series A1N) or from page 2.90.1 (for ISO valves); • Coile type ASA4/ATEXII2 (with integrated connector), see page 2.320.21;
EX mb	CE Ex II 2G Ex mb IIC T5 Gb II 2D Ex tb IIIC T95°C Db IP66		To configure the solenoid valve, combine: • desired ATEX valve body, see from page 2.20.1 (for valves series A1), from page 2.44.1 (for valves series A1N) or from page 2.90.1 (for ISO valves); • Coile type ASA2/ATEXII2 (with 2 mt. cabled connector integrated), see page 2.320.22;

Matching coil/connector with valve body

Coil/Connector		II 3G Ex ec IIC T5 Gc II 3D Ex tc IIIC T95°C Dc IP65 		II 2G Ex db mb IIC T5 Gb II 2D Ex tb IIIC T95°C Db IP66 	II 2G Ex mb IIC T5 Gb II 2D Ex tb IIIC T95°C Db IP66 
Valve body	Size	ASA12/ATEXII3 (coil)	A12209N/ATEX (connector)	ASA4/ATEXII2 (coil with integrated connector)	ASA2/ATEXII2 (coil with integrated cabled connector)
A1EM	1/8"	●	●	-	-
A1E..MD	1/8"	●	●	-	-
	1/4"	●	●	-	-
A1E	1/8"	●	●	●	●
	1/4"	●	●	●	●
	1/2"	●	●	●	●
A1K	1/8"	●	●	●	●
	1/4"	●	●	●	●
	1/2"	●	●	●	●
A1NE	1/4"	●	●	●	●
ISO..E	ISO1	●	●	●	●
	ISO2	●	●	●	●
ISO..K	ISO1	●	●	●	●
	ISO2	●	●	●	●
ISO..EL	ISO1	●	●	●	●
ISO..KL		●	●	●	●
AEF..	1/4"	●	●	●	●

Key

● allowed matching; - not allowed matching

Notes

Solenoid operated valves, ATEX coils and connectors

Complete solenoid operated valves type XA - XA1, intrinsic safety Ex ia

Main features

Solenoid operated valves supplied complete and already mounted, composed by the desired valve body, 30 mm Ex ia intrinsic safety coil (voltage 21.6 ÷ 28 V DC) and relevant connector.

The Ex ia coil (and its connector) can be matched with:
- valve bodies series A1E size 1/8", 1/4" and 1/2", electric actuated, also with external air pilot;
- valve bodies series A1NE size 1/4", electric actuated;
- valve bodies series ISO size ISO1, with Cnomo or in-line pilot, and size ISO2 with Cnomo pilot, electric actuated, also with external air pilot.

These solenoid valve are available in two different ATEX classification:

Type XA is conforming to 2014/34/UE ATEX Directive suitable for applications in potentially explosive atmospheres, Group II, cat. 2 Gas & Powders, temperature class T6, protection grade IP65.

Type XA1 is conforming to 2014/34/UE ATEX Directive for applications in potentially explosive atmospheres, Group II, cat. 2 Gas & Powders, temperature class T4, protection grade IP65.

For code key see from page 2.321.2

For dimensions see from page 2.321.4

For further information on the ATEX 2014/34/EU Directive, on classifications and protections, see from page III.1

II 2G Ex ia IIC T6 Gb II 2D Ex tb IIIC T80°C Db IP65	XA
II 2G Ex ia IIC T4 Gb II 2D Ex tb IIIC T130°C Db IP65	XA1

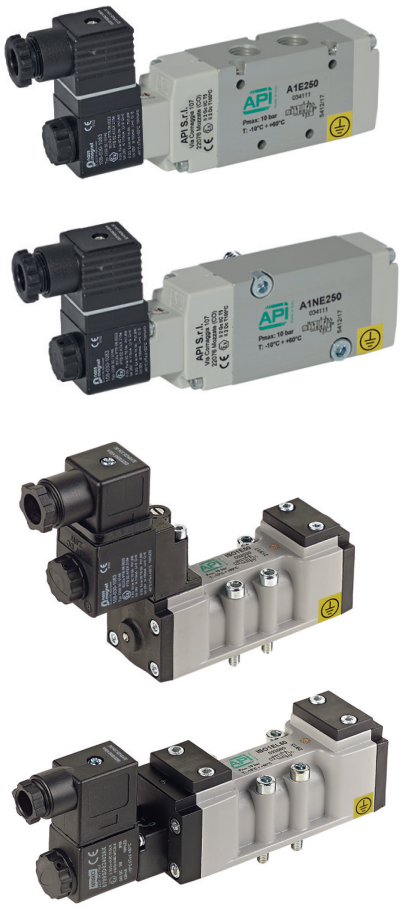

Technical data

Solenoid valve		type XA	type XA1
ATEX classification		II 2G Ex ia IIC T6 Gb II 2D Ex tb IIIC T80°C Db IP65	II 2G Ex ia IIC T4 Gb II 2D Ex tb IIIC T130°C Db IP65
Protection	Gas	Ex ia	
	Dust	Ex tb	
Protection grade		IP65	
Fluid		Compressed air with or without lubrication. Lubrication, if started, must be continued.	
Pressure range	Solenoid/Spring	2 ÷ 7 bar	
	Solenoid/Solenoid	2 ÷ 7 bar	
	3 positions	2,5 ÷ 7 bar	
Temperature range	Standard	-10°C ÷ +60°C	-10°C ÷ +50°C
	(BT)	-25°C ÷ +60°C	-25°C ÷ +50°C

Standard materials

Solenoid valve		type XA	type XA1
Plunger		Brass	
Coil		Thermoset resin	
Connector		Thermoset resin	
Valve body	A1E A1K	See page 2.20.7	
	A1NE	See page 2.44.4	
	ISO..E ISO..K	See page 2.90.6	
	ISO..EL ISO..KL	See page 2.90.6	

Electrical features ATEX coil/connector

Nominal Voltage	Frequency	Nominal current	Nominal power	Duty cycle	Temperature class	Standard voltage	Suffix	ATEX Classification	Coil/Connector
21.6 ÷ 28 V DC	-	0.115 A (@ 28VDC)	1.6 W (@ 28VDC)	100% ED	T6	●	C	II 2G Ex ia IIC T6 Gb II 2D Ex tb IIIC T80°C Db IP65	XA
21.6 ÷ 28 V DC		0.115 A (@ 28VDC)	1.6 W (@ 28VDC)	100% ED	T4	●	C	II 2G Ex ia IIC T4 Gb II 2D Ex tb IIIC T130°C Db IP65	XA1



Key

● standard voltage

Solenoid operated valves, ATEX coils and connectors

Complete solenoid operated valves type XA - XA1, intrinsic safety Ex ia

Code key solenoid valves ATEX complete with coils and connectors (series A1 and A1N)

Series	Actuation	Size	Function	ATEX coil	Coil voltage	Option
A1	**E**	**2**	**50**	**XA**	**C**	
A1 = In line	E = Electric	1 = 1/8"	30 = 3/2 N. C.	XA = CE Ex II 2G Ex ia IIC T6 Gb II 2D Ex tb IIIC T80°C Db X IP65	See table on page 2.321.1	BT = Low temperatures seals
A1N(1)= Namur	K = External air pilot	2 = 1/4"	31 = 3/2 N. A.	XA1 = CE Ex II 2G Ex ia IIC T4 Gb II 2D Ex tb IIIC T130°C Db X IP65		
		4 = 1/2"	32 = 3/2 Sol./Sol.			
			50 = 5/2 Sol./Spring			
			51 = 5/2 Sol./Sol.			
			52 = 5/2 Sol./Sol. differential			
			70 = 5/3 C.C.			
			71 = 5/3 O.C.			
			72 = 5/3 P.C.			

How to order

Series	Actuation	Size	Function	Coil	Voltage
A1	**E**	**2**	**50**	**XA**	**C**

Notes

Options in the same grid are alternative to each others.

For features and standard materials of the valve body, see from page 2.20.7 (for series A1) and from page 2.44.3 (for valves series A1N).

For features and standard materials of coils/connectors, see page 2.321.1

(1) Namur series (A1N) available with electric actuation only (E), in size 1/4" (2), and in functions 3/2 N.C. (30), 3/2 solenoid/solenoid (32), 5/2 solenoid/spring (50), 5/2 solenoid/solenoid (51), 5/3 C.C. (70), 5/3 O.C. (71) and 5/3 P.C. (72).

For further information on the ATEX 2014/34/EU Directive, on classifications and protections, see from page III.1

Solenoid operated valves, ATEX coils and connectors

Complete solenoid operated valves type XA - XA1, intrinsic safety Ex ia

Code key solenoid valves ATEX complete with coils and connectors (series ISO)

Series	Size	Actuation	Pilot	Function	ATEX coil	Coil voltages
ISO	**2**	**E**		**50**	**XA**	**C**
ISO	1 = ISO1 2 = ISO2	E = Electric K = External air pilot	= CNOMO L(1) = In-Line	50 = 5/2 Sol./Spring 51 = 5/2 Sol./Sol. 52 = 5/2 Sol./Sol. differential 70 = 5/3 C.C. 71 = 5/3 O.C. 72 = 5/3 P.C.	XA = CE Ex II 2G Ex ia IIC T6 Gb II 2D Ex tb IIIC T80°C Db X IP65 XA1 = CE Ex II 2G Ex ia IIC T4 Gb II 2D Ex tb IIIC T130°C Db X IP65	See table on page 2.321.1

How to order

Series	Size	Actuation	Pilot	Function	Coil	Voltage
ISO	**2**	**E**		**50**	**XA**	**C**

Notes

Options in the same grid are alternative to each others.

For features and standard materials of the valve body, see from page 2.90.6

For features and standard materials of coils/connectors see page 2.321.1

(1) In line pilot (L) available only for size ISO1 (1).

For further information on the ATEX 2014/34/EU Directive, on classifications and protections, see from page III.1

Dimensions coil and connector series XA and XA1 with valves body series A1E1 (1/8")

Valve bodies series: **A1E1**

II 2G Ex ia IIC T6 Gb
II 2D Ex tb IIIC T80°C Db IP65
XA

II 2G Ex ia IIC T4 Gb
II 2D Ex tb IIIC T130°C Db IP65
XA1

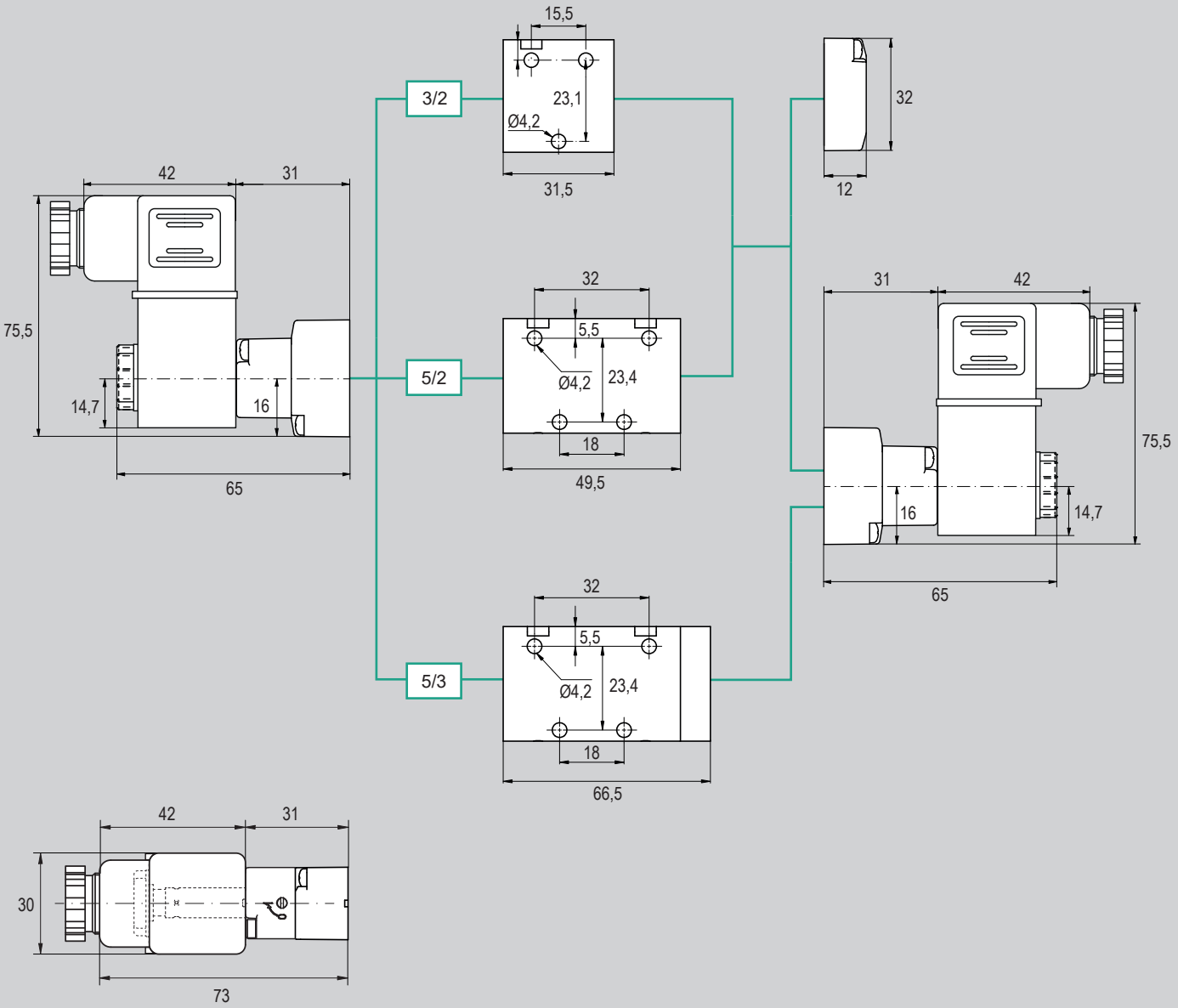

For further information on features of valves body series A1E1 (1/8"), see from page 2.21.10

Dimensions coil and connector series XA and XA1 with valves body series A1K1 (1/8")

Valve bodies series: **A1K1**

II 2G Ex ia IIC T6 Gb
II 2D Ex tb IIIC T80°C Db IP65
XA

II 2G Ex ia IIC T4 Gb
II 2D Ex tb IIIC T130°C Db IP65
XA1

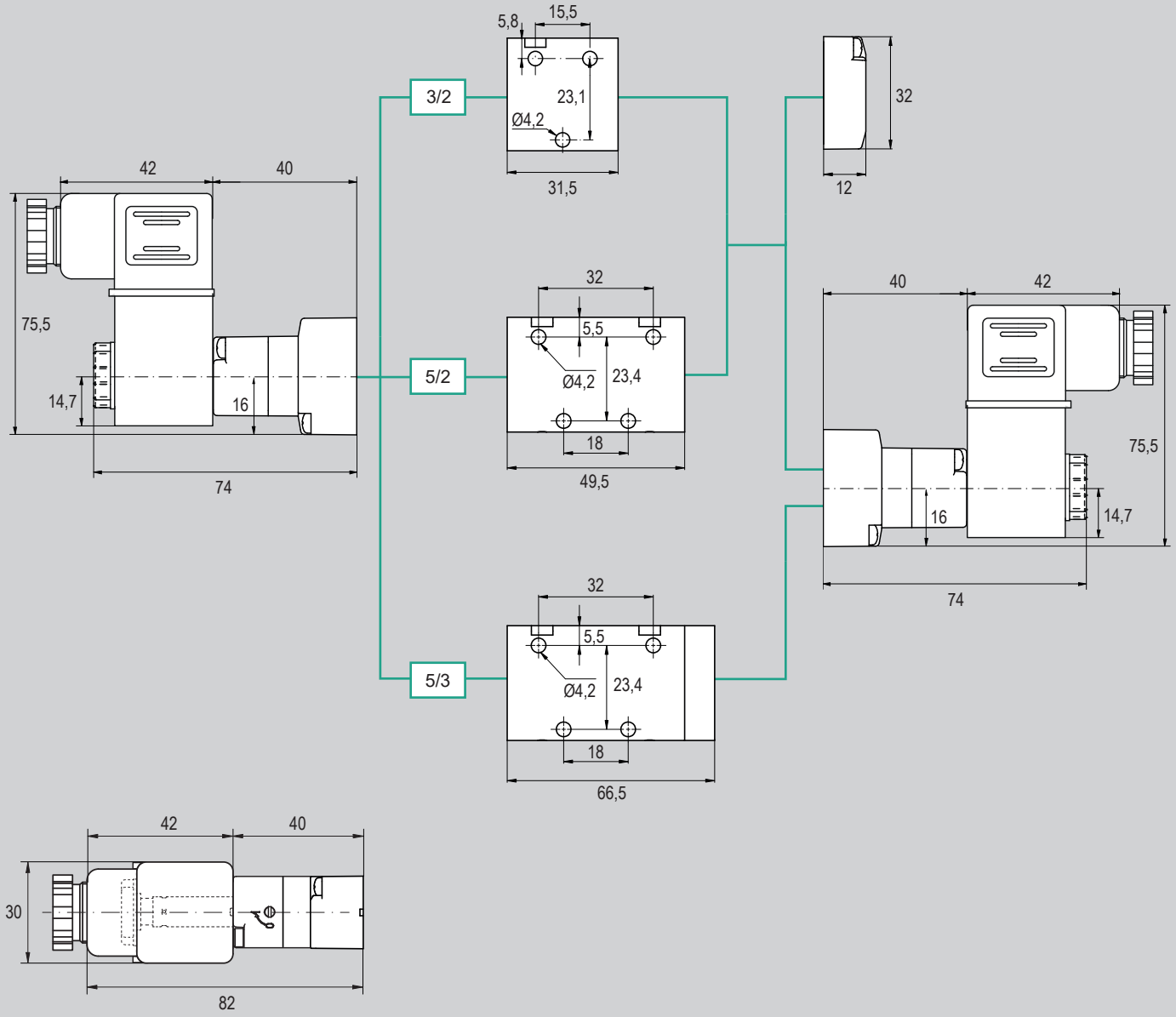

For further information on features of valves body series A1K1 (1/8"), see from page 2.21.10

Dimensions coil and connector series XA and XA1 with valves body series A1E2 (1/4")

Valve bodies series: **A1E2**

II 2G Ex ia IIC T6 Gb
II 2D Ex tb IIIC T80°C Db IP65
XA

II 2G Ex ia IIC T4 Gb
II 2D Ex tb IIIC T130°C Db IP65
XA1

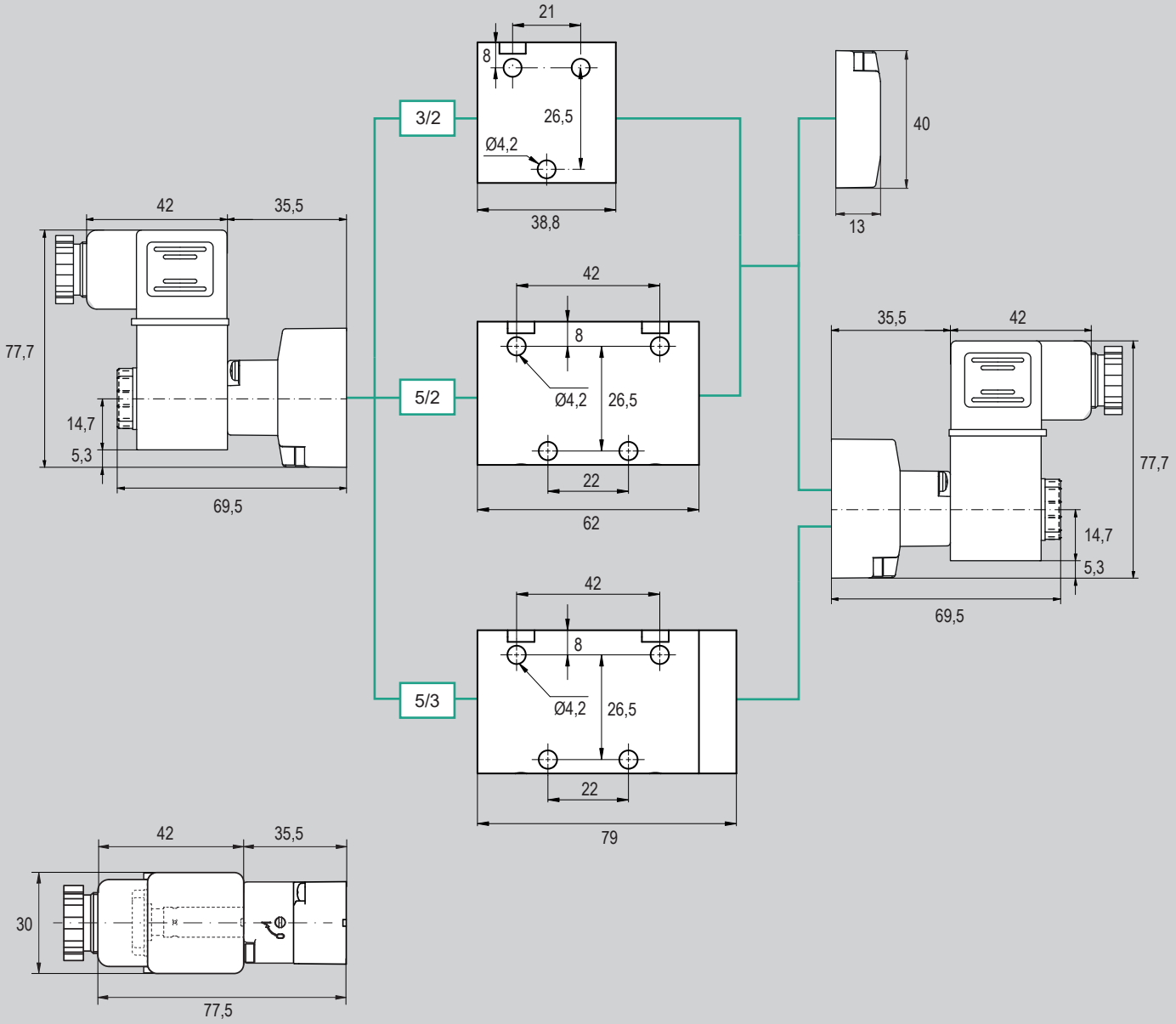

For further information on features of valves body series A1E2 (1/4"), see from page 2.23.10

Dimensions coil and connector series XA and XA1 with valves body series A1K2 (1/4")

Valve bodies series: **A1K2**

II 2G Ex ia IIC T6 Gb
II 2D Ex tb IIIC T80°C Db IP65
XA

II 2G Ex ia IIC T4 Gb
II 2D Ex tb IIIC T130°C Db IP65
XA1

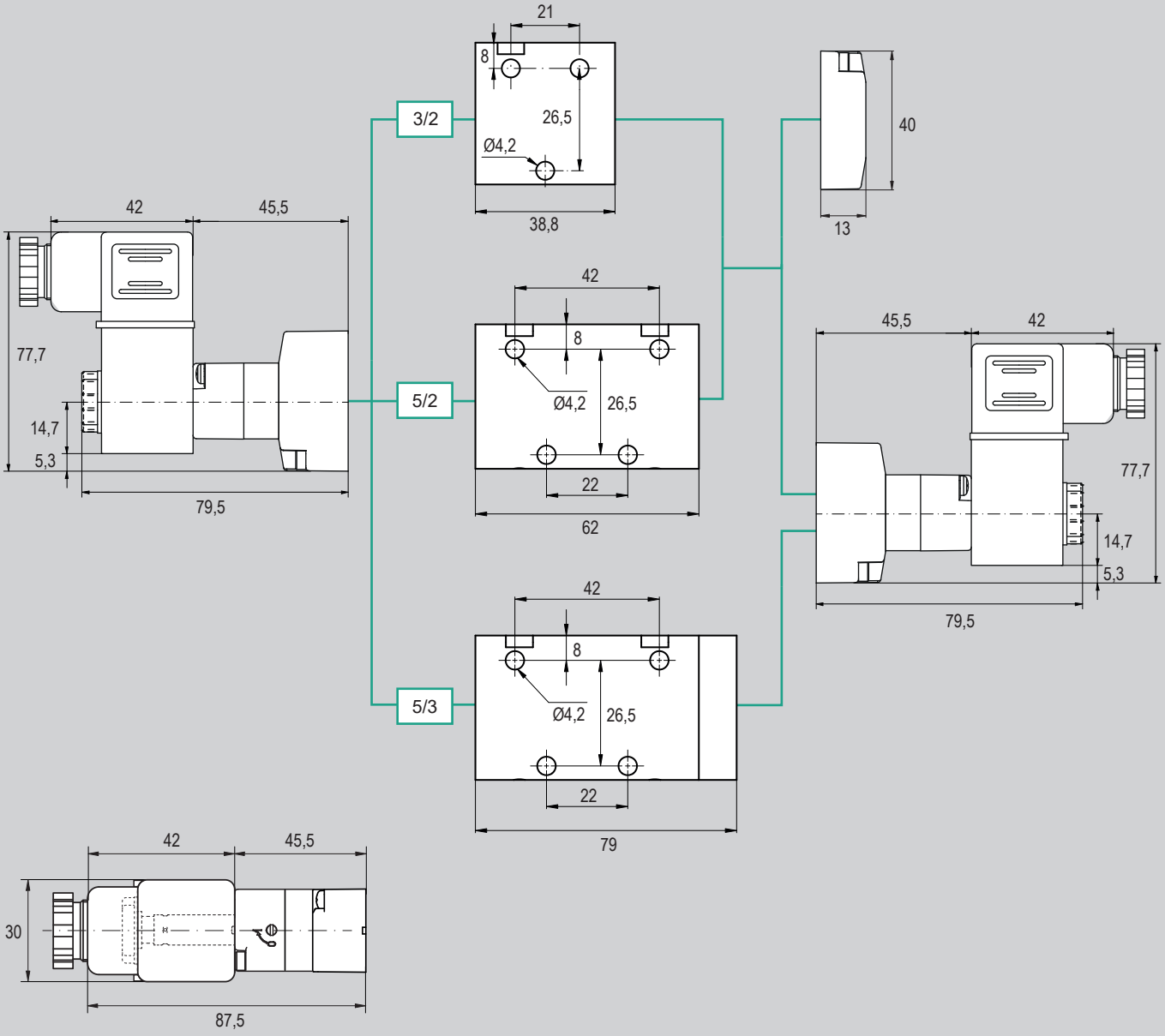

For further information on features of valves body series A1K2 (1/4"), see from page 2.23.10

Dimensions coil and connector series XA and XA1 with valves body series A1E4 and A1K4 (1/2")

Valve bodies series: **A1E4 - A1K4**

II 2G Ex ia IIC T6 Gb
II 2D Ex tb IIIC T80°C Db IP65
XA

II 2G Ex ia IIC T4 Gb
II 2D Ex tb IIIC T130°C Db IP65
XA1

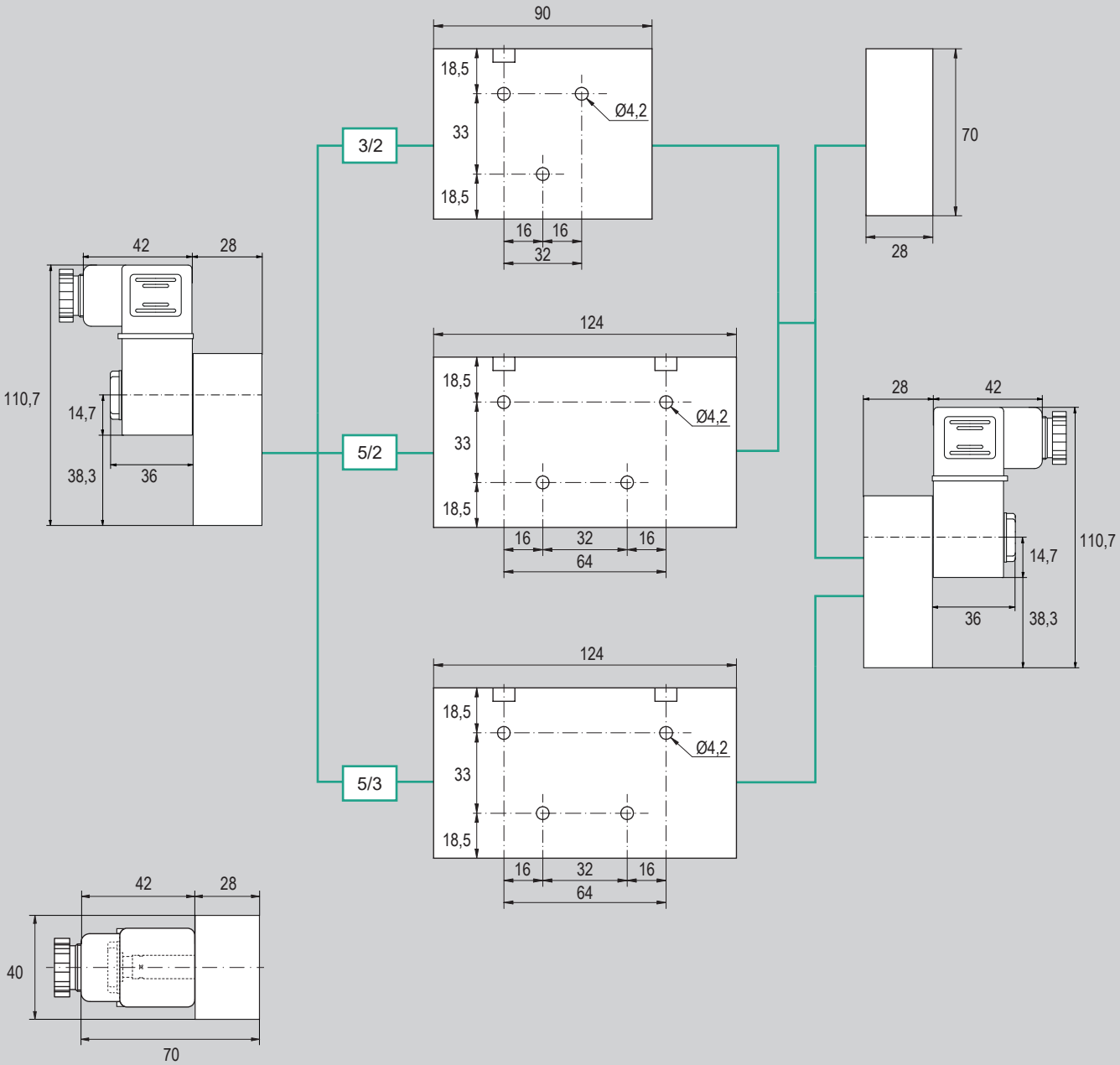

For further information on features of valves body series A1E4 and A1K4 (1/4"), see from page 2.25.10

Dimensions coil and connector series XA and XA1 with valves body series A1NE2 (1/4")

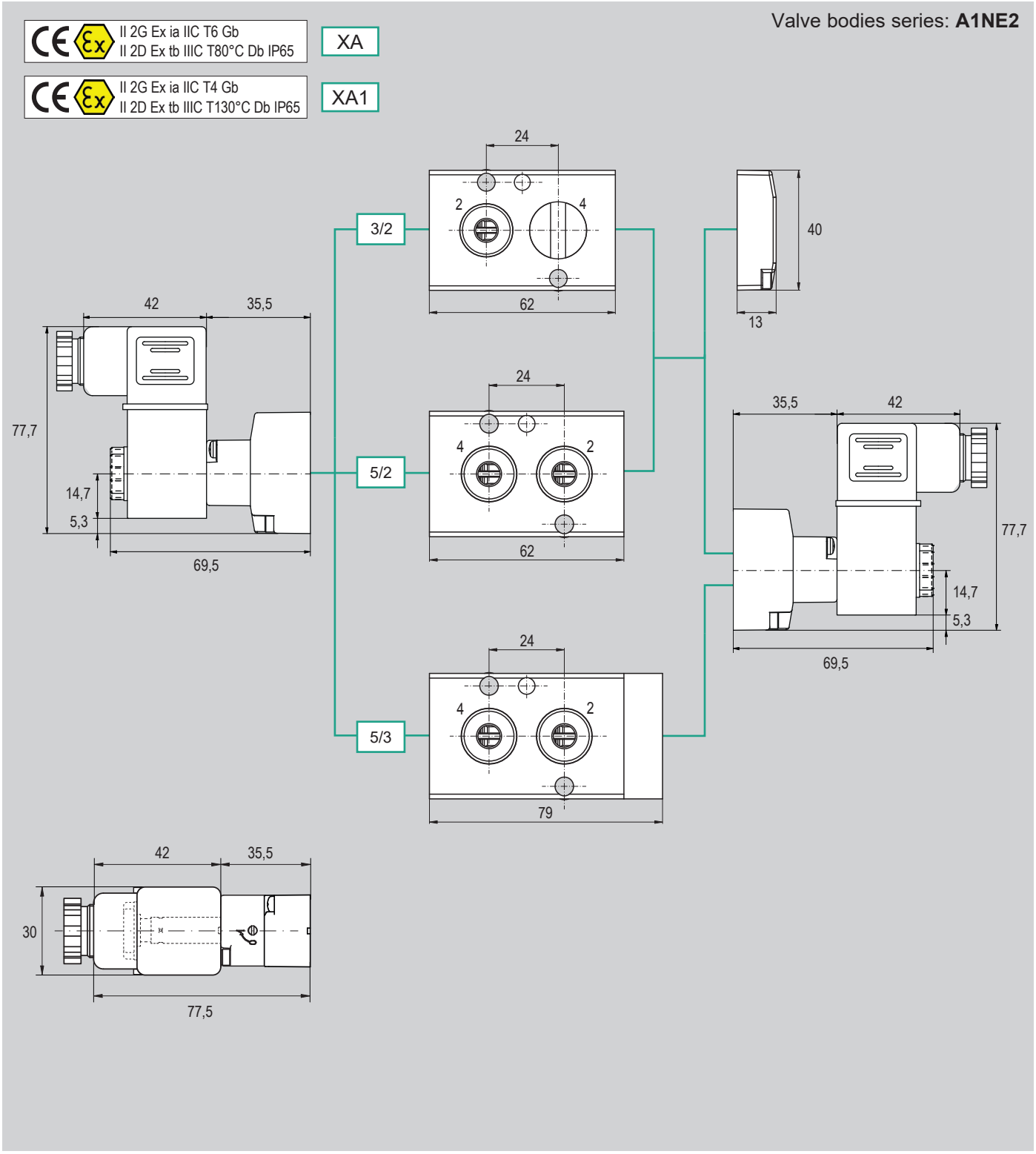

For further information on features of valves body series A1NE2 (1/4"), see from page 2.46.10

Dimensions coil and connector series XA and XA1 with valves body series ISO1E and ISO1K, 5/2 and 5/3

Valve bodies series: **ISO1E - ISO1K**

II 2G Ex ia IIC T6 Gb
II 2D Ex tb IIIC T80°C Db IP65
XA

II 2G Ex ia IIC T4 Gb
II 2D Ex tb IIIC T130°C Db IP65
XA1

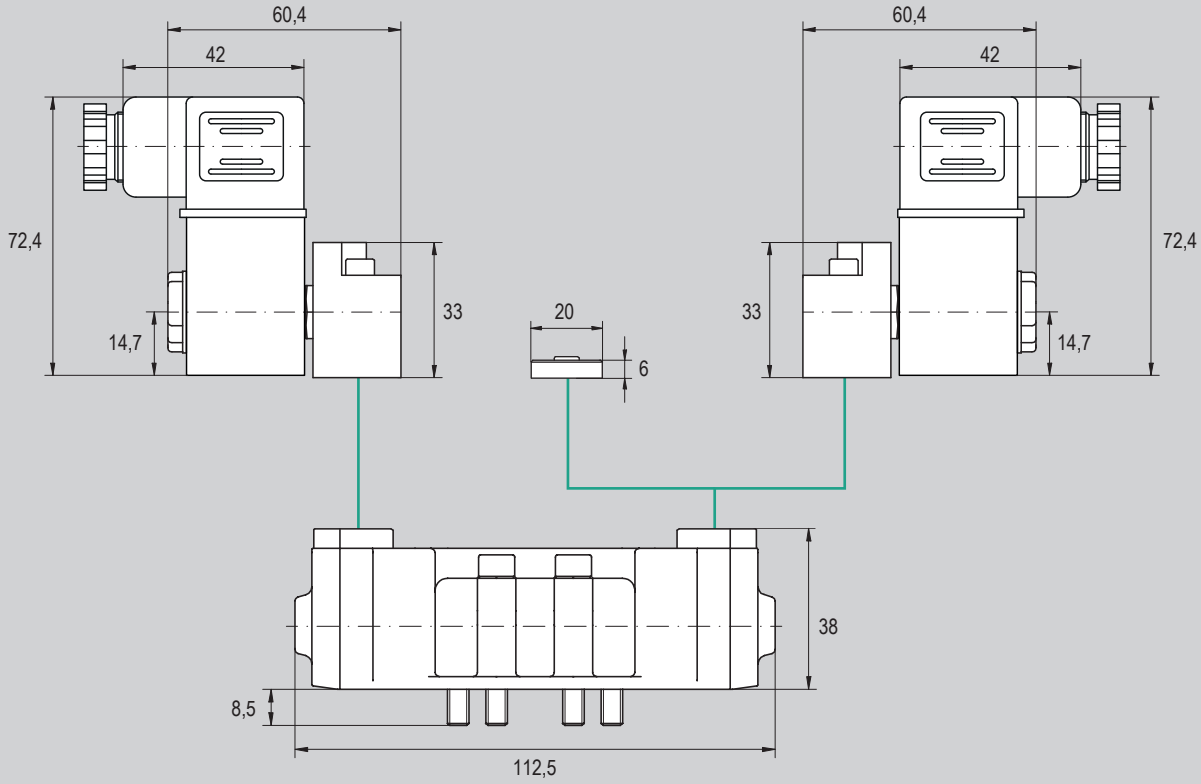

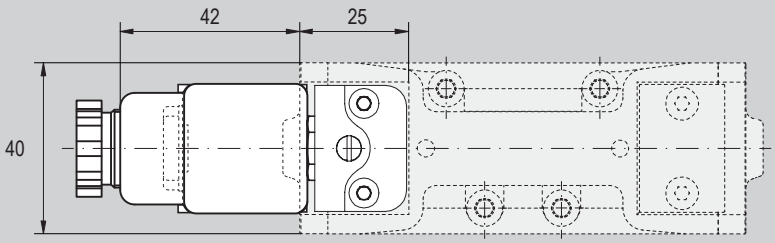

For further information on features of valves body series ISO1E and ISO1K, see from page 2.91.30

Dimensions coil and connector series XA and XA1 with valves body series ISO1EL and ISO1KL

Valve bodies series: **ISO1EL - ISO1KL**

II 2G Ex ia IIC T6 Gb
II 2D Ex tb IIIC T80°C Db IP65 — XA

II 2G Ex ia IIC T4 Gb
II 2D Ex tb IIIC T130°C Db IP65 — XA1

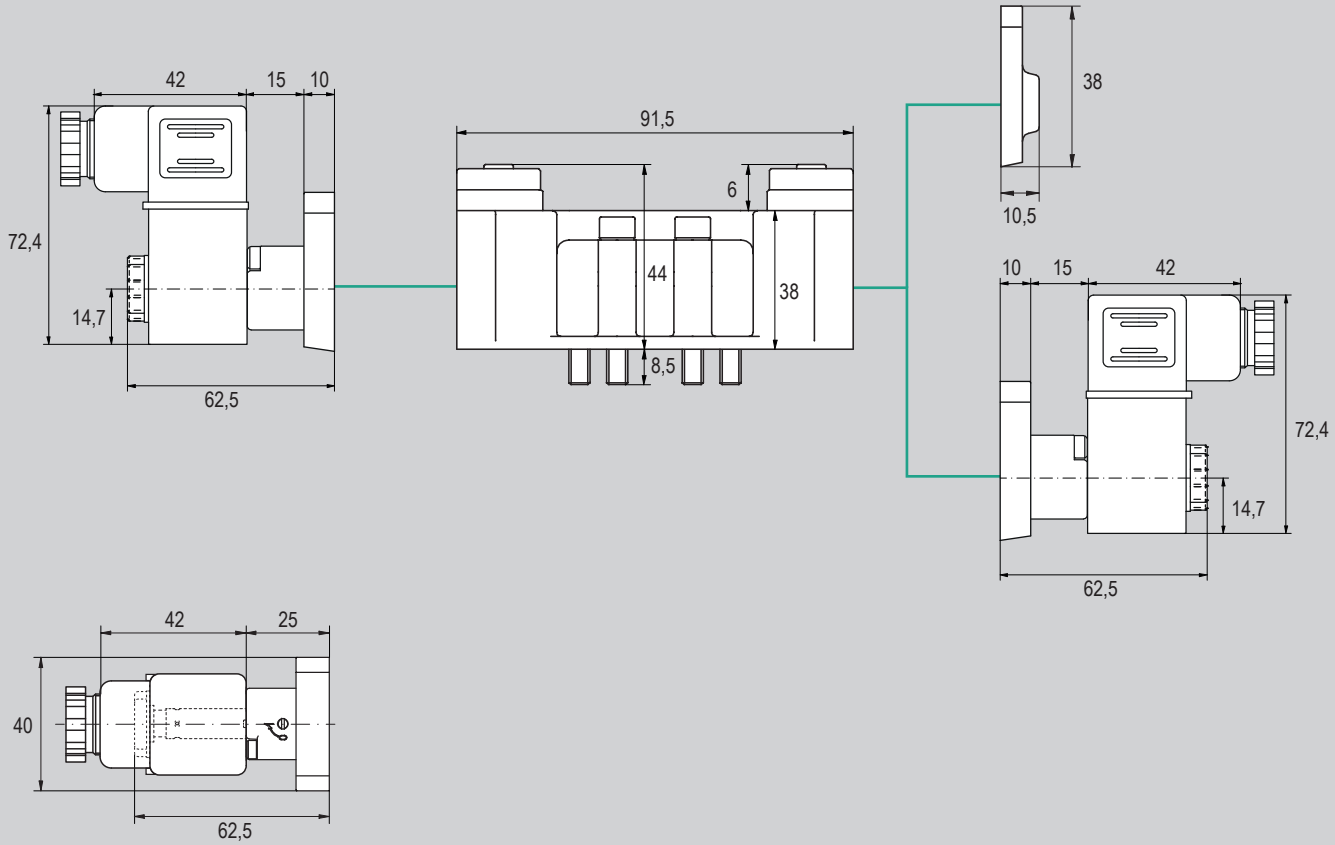

For further information on features of valves body series ISO1EL and ISO1KL, see from page 2.92.30

Dimensions coil and connector series XA and XA1 with valves body series ISO2E and ISO2K

Valve bodies series: **ISO2E - ISO2K**

II 2G Ex ia IIC T6 Gb
II 2D Ex tb IIIC T80°C Db IP65
XA

II 2G Ex ia IIC T4 Gb
II 2D Ex tb IIIC T130°C Db IP65
XA1

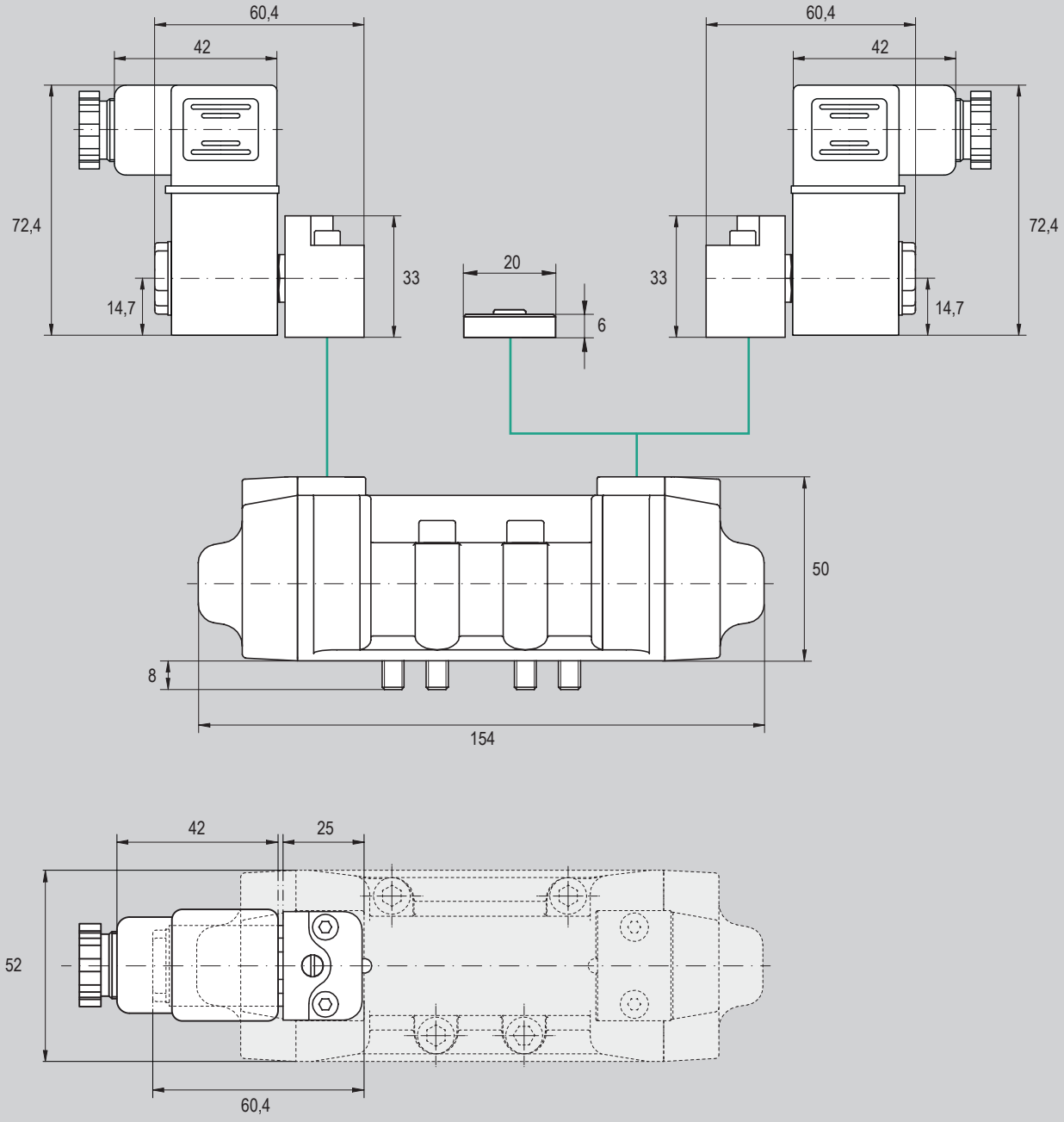

For further information on features of valves body series ISO2E and ISO2K, see from page 2.94.30

Solenoid operated valves, ATEX coils and connectors

Complete solenoid operated valves type XC, explosion proof coil Ex d

Main features

Solenoid operated valves supplied complete and already mounted, composed by the desired valve body and Ex d explosion proof coil with integrated pilot.

The Ex d coil can be matched with:
- valve bodies series A1E size 1/4", electric actuated;
- valve bodies series A1NE size 1/4", electric actuated.

Type XC is conforming to 2014/34/EU ATEX Directive suitable for applications in potentially explosive atmospheres, Group II, cat. 2 Gas, temperature class T6.

For code key see page 2.322.2

For dimensions see from page 2.322.3

For further information on the ATEX 2014/34/EU Directive, on classifications and protections, see from page III.1





II 2G Ex db IIC T6 Gb

XC

Technical data

Elettrovalvola		tipo XC
ATEX classification		II 2G Ex db IIC T6 Gb
Protection	Gas	Ex db
	Dust	-
Protection grade		-
Fluid		Compressed air with or without lubrication. Lubrication, if started, must be continued.
Pressure range	Solenoid/Spring	2 ÷ 8 bar
	Solenoid/Solenoid	2 ÷ 8 bar
	3 positions	2,5 ÷ 8 bar
Temperature range	Standard	-10°C ÷ +60°C
	(BT)	-20°C ÷ +60°C

Standard materials

Elettrovalvola		tipo XC
Plunger		Stainless Steel AISI 316L
Coil		
Connector		
Valve body	A1E	See page 2.20.7
	A1NE	See page 2.44.4

Electrical features ATEX coil/connector

Nominal Voltage	Frequency	Nominal current	Nominal power	Duty cycle	Temperature class	Standard voltage	Suffix	ATEX Classification	Coil/Connector
12 VDC	-	-	3.5 W	100% ED	T6	-	**B**	II 2G Ex db IIC T6 Gb	XC 
24 VDC						●	**C**		
24VAC	50 / 60 Hz		4 VA			●	**F**		
110 VAC						-	**I**		
120 VAC						●	**M**		
220 VAC						●	**O**		
240 VAC						-	**Q**		

Key

● standard voltage; – voltage available on request (please contact our sales department)

Solenoid operated valves, ATEX coils and connectors

Complete solenoid operated valves type XC, explosion proof coil Ex d

Code key solenoid valves ATEX complete with coils and connectors (serie A1 e A1N)

Series	Actuation	Size	Function	ATEX coil	Coil voltage	Option
A1	**E**	**2**	**50**	**XA**	**C**	

- Series: A1 = In line; A1N(1) = Namur
- Actuation: E = Electric
- Size: 2 = 1/4"
- Function: 30 = 3/2 N. C.; 31 = 3/2 N. A.; 32 = 3/2 Sol./Sol.; 50 = 5/2 Sol./Spring; 51 = 5/2 Sol./Sol.; 52 = 5/2 Sol./Sol. differential; 70 = 5/3 C.C.; 71 = 5/3 O.C.; 72 = 5/3 P.C.
- ATEX coil: XC = CE Ex II 2G Ex db IIC T6 Gb
- Coil voltage: See table on page 2.322.1
- Option: BT = Low temperatures seals

How to order

Series	Actuation	Size	Function	Coil	Voltage
A1	**E**	**2**	**50**	**XC**	**C**

Notes

Options in the same grid are alternative to each others.

For features and standard materials of the valve body, see from page 2.20.7 (series A1) and from page 2.44.3 (series A1N).

For features and standard materials of coils/connectors see page 2.320.3.

(1) Namur valves (series A1N) is available only in functions 3/2 N.C. (30), 3/2 sol./sol. (32), 5/2 sol./spring (50), 5/2 sol./sol. (51), 5/3 C.C. (70), 5/3 C.A. (71) and 5/3 C.P. (72).

For further information on the ATEX 2014/34/EU Directive, on classifications and protections, see from page III.1

Dimensions coil series XC with valves body series A1E2 (1/4")

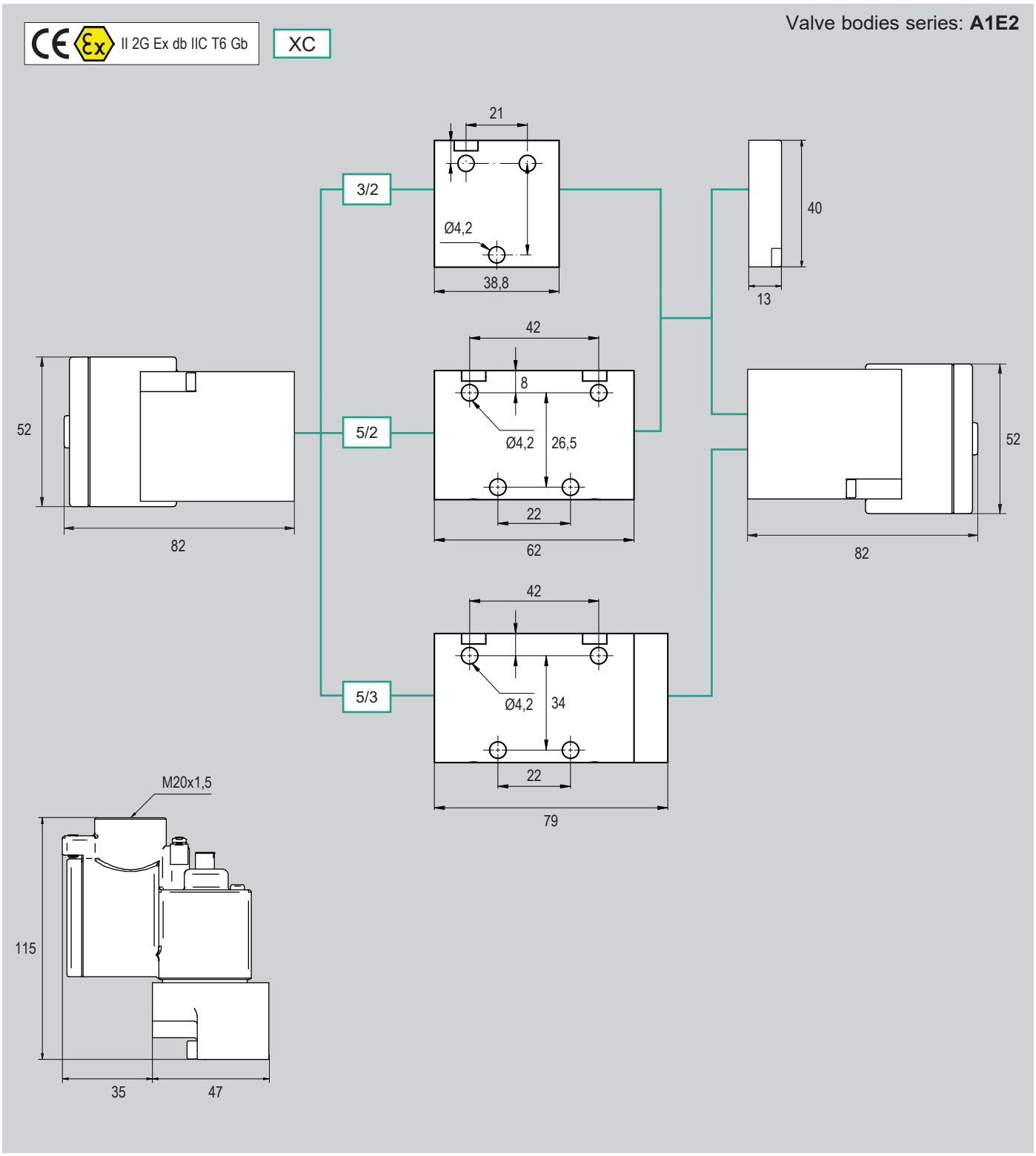

For further information on features of valves body series A1E2 (1/4"), see from page 2.23.10

Dimensions coil series XC with valves body series A1NE2 (1/4")

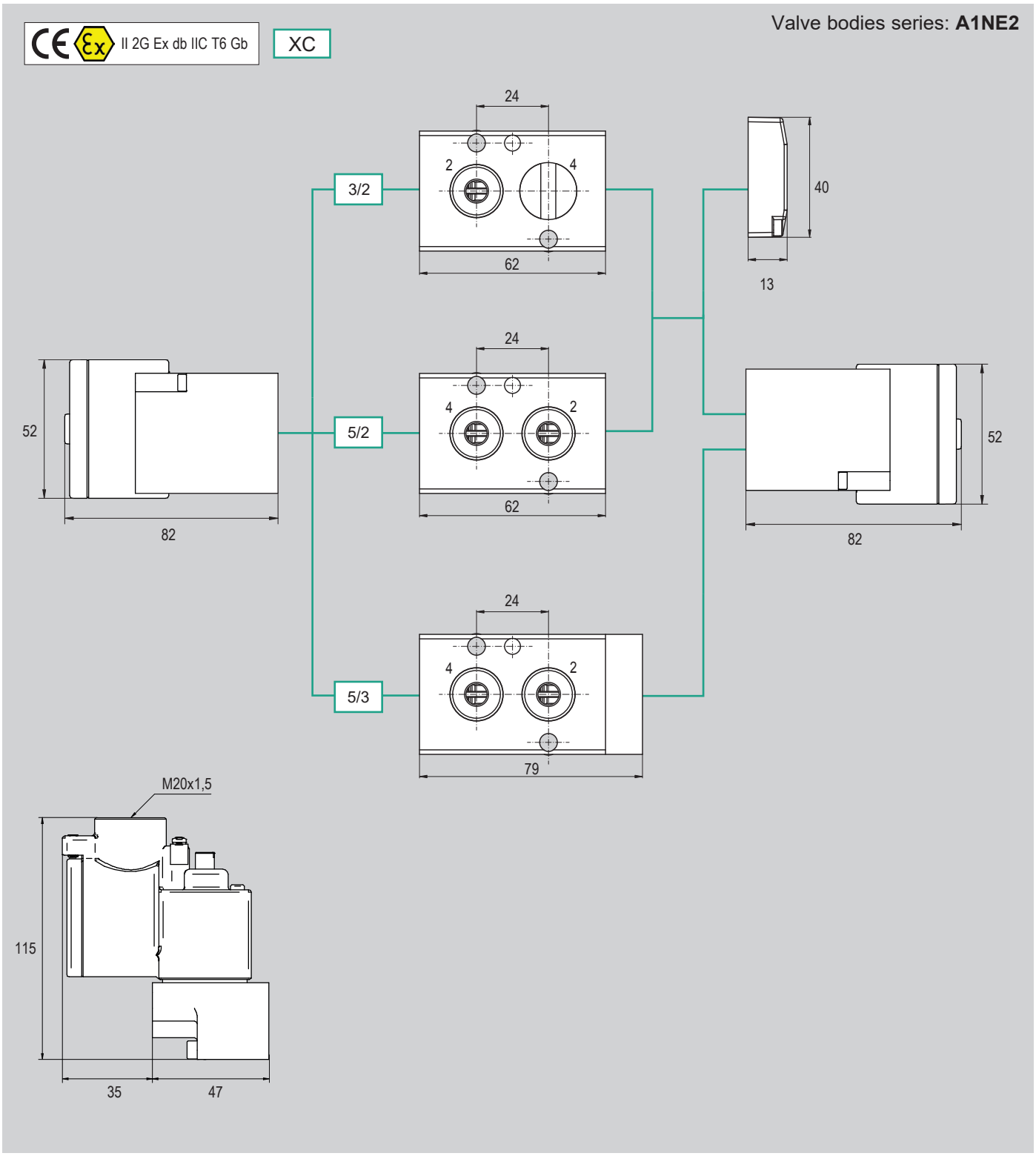

For further information on features of valves body series A1NE2 (1/4"), see from page 2.46.10

Solenoid operated valves, ATEX coils and connectors

Coils and connectors supplied separately, increased safety Ex ec

Main features

Solenoid operated valves conforming to ATEX Ex ec (increased safety), to be configured combining the valve body with coil type ASA12/ATEXII3 and connector type A12209N/ATEX.

Valve body, coil and connector are supplied separetely and not mounted.

The configuration require to order the valve body of desired size and function, with "Atex body" option (see the relevant code key of each series), the 22 mm coil type ASA12/ATEXII3 (available in different voltages) and the 22 mm connector type A12209N/ATEX, as shown in the "how to order" table below.

For mathcing between valve body, coil and connector, please see page 2.320.5

For technical data and for dimensions of the valve body, please refere to the relevant pages of each series.
For technical data and for dimensions of the coil type ASA12/ATEXII3 see page 2.325.2
For technical data and for dimensions of the connector type A12209N/ATEX see page 2.325.3

ATEX compliance

The abovementioned components, while assembled, makes a solenoid operated valve conforming to 2014/34/EU ATEX Directive, in classification Ex ec, suitable for application in potentially explosive atmospheres Group II, cat. 3 Gas & Powders, temperature class T5, protection grade IP65, with the following marking:

CE Ex II 3G Ex ec IIC T5 Gc
II 3D Ex tc IIIC T95°C Dc IP65

For further information on the ATEX 2014/34/EU Directive, on classifications and protections, see from page III.1

How to order

Valve body series	Actuation	Size	Function	ATEX body option
A1	E	2	50	/ATEX

Coil series	Size	Voltage	ATEX compliance
ASA	12	024 00	/ATEXII3

Connector series	Size	Voltage	Color	ATEX compliance
A	122	09	1	/ATEX

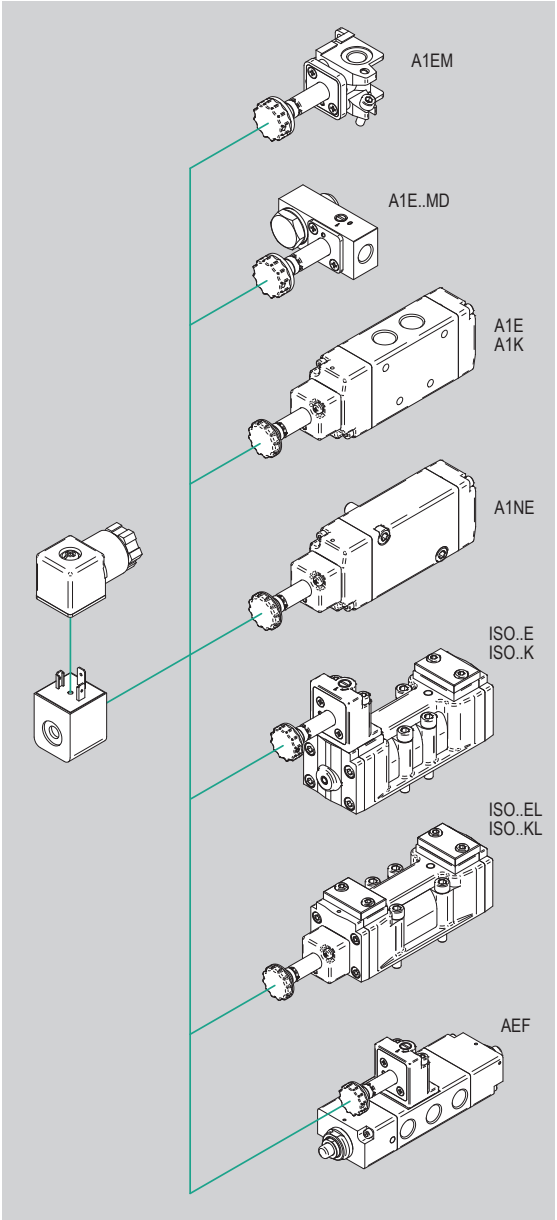

Valve body technical data, dimensions and materials

Technical data, dimensions and materials of the valve bodies (Atex valve body option required) are the same of the standard valve body.
For further information, please see the relevant pages, as indicated in the table below.

Series	Size	Technical data					Dimensions					Standard materials
		3/2 sol./spring	3/2 sol./sol.	5/2 sol./spring	5/2 sol./sol.	5/3	3/2 sol./spring	3/2 sol./sol.	5/2 sol./spring	5/2 sol./sol.	5/3	
A1EM	22 mm	2.12.10	-	-	-	-	2.12.11	-	-	-	-	2.10.4
A1E..MD	22 mm	2.14.10	-	-	-	-	2.14.11	-	-	-	-	2.10.5
A1E A1K	1/8"	2.21.10	2.21.30	2.21.50	2.21.70	2.21.90	2.21.11	2.21.31	2.21.51	2.21.71	2.21.91	2.20.7
	1/4"	2.23.10	2.23.30	2.23.50	2.23.70	2.23.90	2.23.11	2.23.31	2.23.51	2.23.71	2.23.91	
	1/2"	2.25.10	2.25.30	2.25.50	2.25.70	2.25.90	2.25.11	2.25.31	2.25.51	2.25.71	2.25.91	
A1NE	1/4"	2.46.10	2.46.30	2.46.50	2.46.70	2.46.90	2.46.11	2.46.31	2.46.51	2.46.71	2.46.91	2.44.4
ISO..E ISO..K	ISO1	-	-	2.91.30	2.91.50	2.91.70	-	-	2.91.31	2.91.51	2.91.71	2.90.6
	ISO2	-	-	2.94.30	2.94.50	2.94.70	-	-	2.94.31	2.94.51	2.94.71	
ISO..EL ISO..KL	ISO1	-	-	2.92.30	2.92.50	2.92.70	-	-	2.92.31	2.92.51	2.92.71	
	ISO2	-	-	-	-	-	-	-	-	-	-	
AEF	1/4"	-	-	2.130.20	-	-	-	-	2.130.21	-	-	2.130.3

Solenoid operated valves, ATEX coils and connectors

Coils series ASA12/ATEXII3, increased safety Ex ec

Main features

Version	Standard voltages	Code	Item
ASA12/ATEXII3	12 V DC	032100X	ASA1201200/ATEXII3
	24 V DC	032102X	ASA1202400/ATEXII3
	24 V AC	032103X	ASA1202450/ATEXII3
	110 V AC	032105X	ASA1211050/ATEXII3
	230 V AC	032106X	ASA1223050/ATEXII3



Technical data

Version	ASA12../ATEXII3				
Code	032100X	032102X	032103X	032105X	032106X
Item	ASA1201200/ATEXII3	ASA1202400/ATEXII3	ASA1202450/ATEXII3	ASA1211050/ATEXII3	ASA1223050/ATEXII3
Voltage	12 V DC	24 V DC	24 V AC	110 V AC	230 V AC
Current	0.250 A	0.120 A	0.208 A	0.045 A	-0.023 A
Frequency	-		50/60 Hz		
Size	22 mm				
Plunger Ø	9 mm				
Compliance	ATEX 2014/34/EU				
ATEX classification	II 3G Ex ec IIC T5 Gc II 3D Ex tc IIIC T95°C Dc IP65				
Current	Direct		Alternating		
Voltage tolerance	±10%				
Electrical consumption	3 W		5 VA		
Duty cycle	100% ED				
Class protection*	IP 65				
Insulation class	F				
Temperature range	-10°C ÷ +50°C				
Material	Thermoset resin				
Valves matching	Series A1EM.., Series A1E..MD, Series A1E.., Series A1K.., Series A1NE.., Series ISO..., Series AEF..				
Connectors matching	Series A122..ATEX				

*With connector already mounted

Standard dimensions

II 3G Ex ec IIC T5 Gc
II 3D Ex tc IIIC T95°C Dc IP65

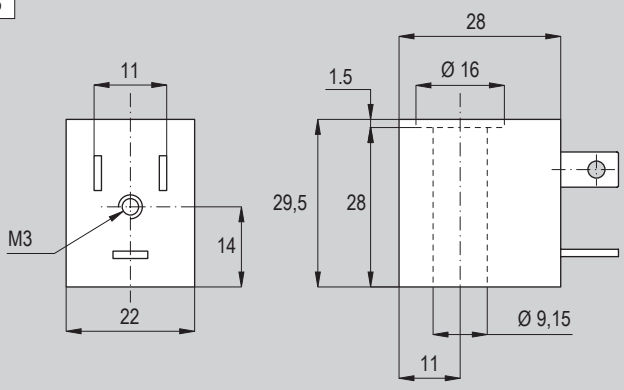

Main features

Version	Code	Item
A122/ATEX	032118X	A12209N/ATEX



Technical data

Version	A122../ATEX
Code	032118X
Item	A12209N/ATEX
Nominal voltage	230 V DC
Norm	EN 175301-803 (formaDIN 43 650)
Size	22 mm
Contact distance	11 mm
Compliance	ATEX 2014/34/EU
ATEX classification	II 2G Ex eb IIC T5 Gb II 2D Ex tb IIIC T100°C IP65/IP67
Rated impulse voltage	4000 V
Rated current (40°C)	10 A
Contact resistance	≤ 15 mΩ
Insulation resistance	≥ 100 MΩ
Class protection	IP65 / IP67
Insulation class	F
Temperature range	-20°C ÷ +85°C
Material	Thermoset resin
Valves matching	Series A1EM.., Series A1E..MD, Series A1E.., Series A1K.., Series A1NE.., Series ISO..., Series AEF..
Coils matching	ASA12../ATEXII3

Standard dimensions

II 2G Ex eb IIC T5 Gb
II 2D Ex tb IIIC T100°C IP65/IP67

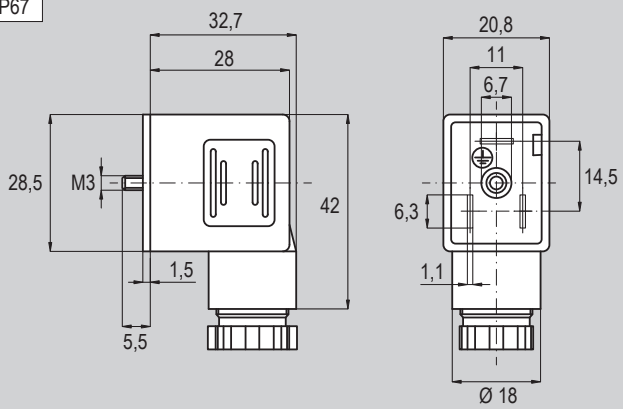

Solenoid operated valves, ATEX coils and connectors

Coils and connectors supplied separately, explosion proof encapsulated coil Ex db mb

Main features

Solenoid operated valves conforming to ATEX Ex db mb (explosion proof encapsulated coil), to be configured combining the valve body with coil type ASA4/ATEXII2 with integrated connector.

Valve body and coil are supplied separetely and not mounted.

The configuration require to order the valve body of desired size and function, with "Atex body" option (see the relevant code key of each series), and the 36 mm coil type ASA4/ATEXII2, as shown in the "how to order" table below.

For mathcing between valve body and coil, please see page 2.320.5

For technical data and for dimensions of the valve body, please refere to the relevant pages of each series.
For technical data and for dimensions of the coil type ASA4/ATEXII2 see page 2.326.2

Valve body series A1NE require plate type PSN, see from page 2.56.1

ATEX compliance

The abovementioned components, while assembled, makes a solenoid operated valve conforming to 2014/34/EU ATEX Directive, in classification Ex db mb, suitable for application in potentially explosive atmospheres Group II, cat. 2 Gas & Powders, temperature class T5, protection grade IP66, with the following marking:

CE Ex II 2G Ex db mb IIC T5 Gb
II 2D Ex tb IIIC T95°C Db IP66

For further information on the ATEX 2014/34/EU Directive, on classifications and protections, see from page III.1

How to order*

Valve body series	Actuation	Size	Function	ATEX body option
A1	E	2	50	/ATEX

Coil series	Size	Voltage	ATEX compliance
ASA	4	024 00	/ATEXII2

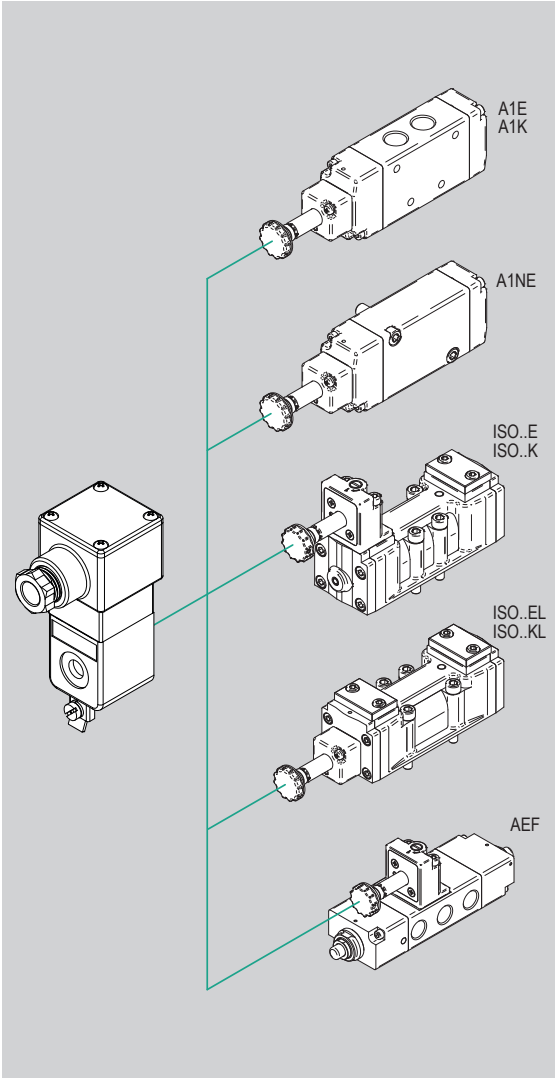

***Important note:** valve bodies series A1NE requires plates type PSN. For codes see page 2.56.10

Valve body technical data, dimensions and materials

Technical data, dimensions and materials of the valve bodies (Atex valve body option required) are the same of the standard valve body.
For further information, please see the relevant pages, as indicated in the table below.

Series	Size	Technical data					Dimensions					Standard materials
		3/2 sol./spring	3/2 sol./sol.	5/2 sol./spring	5/2 sol./sol.	5/3	3/2 sol./spring	3/2 sol./sol.	5/2 sol./spring	5/2 sol./sol.	5/3	
A1E A1K	1/8"	2.21.10	2.21.30	2.21.50	2.21.70	2.21.90	2.21.11	2.21.31	2.21.51	2.21.71	2.21.91	2.20.7
	1/4"	2.23.10	2.23.30	2.23.50	2.23.70	2.23.90	2.23.11	2.23.31	2.23.51	2.23.71	2.23.91	
	1/2"	2.25.10	2.25.30	2.25.50	2.25.70	2.25.90	2.25.11	2.25.31	2.25.51	2.25.71	2.25.91	
A1NE	1/4"	2.46.10	2.46.30	2.46.50	2.46.70	2.46.90	2.46.11	2.46.31	2.46.51	2.46.71	2.46.91	2.44.4
ISO..E ISO..K	ISO1	-	-	2.91.30	2.91.50	2.91.70	-	-	2.91.31	2.91.51	2.91.71	2.90.6
	ISO2	-	-	2.94.30	2.94.50	2.94.70	-	-	2.94.31	2.94.51	2.94.71	
ISO..EL ISO..KL	ISO1	-	-	2.92.30	2.92.50	2.92.70	-	-	2.92.31	2.92.51	2.92.71	
	ISO2	-	-	-	-	-	-	-	-	-	-	
AEF	1/4"	-	-	2.130.20	-	-	-	-	2.130.21	-	-	2.130.3

Solenoid operated valves, ATEX coils and connectors

Coils series ASA4/ATEXII2, explosion proof encapsulated coil Ex db mb

Main features

Version	Standard voltages	Code	Item
ASA4/ATEXII2	24 V DC	032199	ASA402400/ATEXII2



Technical data

Version	ASA4/ATEXII2
Code	032199
Item	ASA202400/ATEXII2
Voltage	24 V DC
Frequency	50/60 Hz
Size	36 mm
Plunger Ø	9 mm
Compliance	ATEX 2014/34/EU
ATEX classification	II 2G Ex db mb IIC T5 Gb II 2D Ex tb IIIC T95°C IP66 Db
Current	Direct
Voltage tolerance	±10%
Electrical consumption	3.2 VA
Duty cycle	100% ED
Class protection	IP 66
Insulation class	F
Temperature range	-20°C ÷ +50°C
Material	Thermoset resin
Valves matching*	Series A1E.., Series A1K.., Series A1NE.., Series ISO..., Series AEF..
Connectors	Connector integrated

* Valve body series A1NE require plate type PSN, see from page 2.56.1

Standard dimensions

II 2G Ex db mb IIC T5 Gb
II 2D Ex tb IIIC T95°C IP66 Db

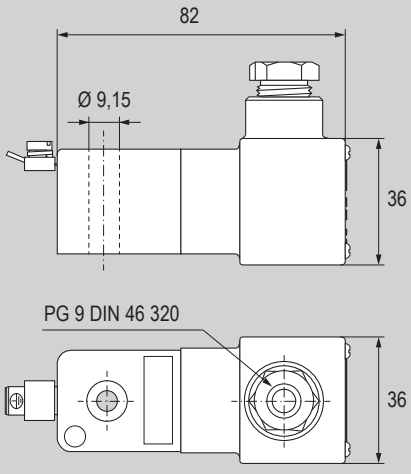

Solenoid operated valves, ATEX coils and connectors

Coils and connectors supplied separately, encapsulated coil Ex mb

Main features

Solenoid operated valves conforming to ATEX Ex mb (encapsulated coil), to be configured combining the valve body with coil type ASA2/ATEXII2 with cabled connector integrated.

Valve body and coil are supplied separetely and not mounted.

The configuration require to order the valve body of desired size and function, with "Atex body" option (see the relevant code key of each series), and the 30 mm coil type ASA2/ATEXII2 (available in different voltages), as shown in the "how to order" below.

For mathcing between valve body and coil, please see page 2.320.5

For technical data and for dimensions of the valve body, please refere to the relevant pages of each series.
For technical data and for dimensions of the coil type ASA2/ATEXII2 see page 2.327.2

Valve body series A1NE require plate type PSN, see from page 2.56.1

ATEX compliance

The abovementioned components, while assembled, makes a solenoid operated valve conforming to 2014/34/EU ATEX Directive, in classification Ex mb, suitable for application in potentially explosive atmospheres Group II, cat. 2 Gas & Powders, temperature class T5, protection grade IP66, with the following marking:

II 2G Ex mb IIC T5 Gb
II 2D Ex tb IIIC T95°C Db IP66

For further information on the ATEX 2014/34/EU Directive, on classifications and protections, see from page III.1

How to order*

Valve body series	Actuation	Size	Function	ATEX body option
A1	E	2	50	/ATEX

Coil series	Size	Voltage	ATEX compliance
ASA	2	024 00	/ATEXII2

***Important note:** valve bodies series A1NE requires plates type PSN. For codes see page 2.56.10

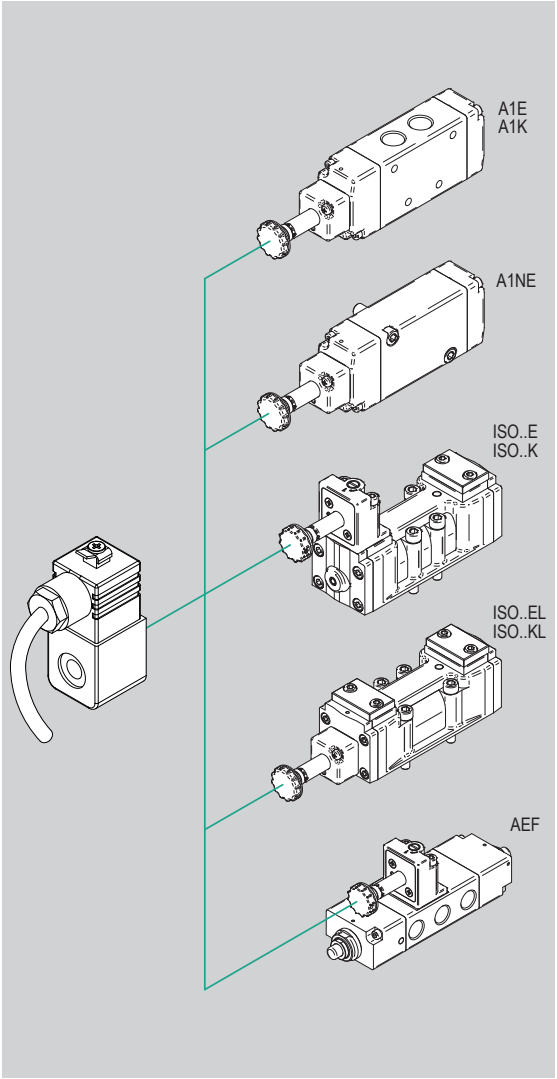

Valve body technical data, dimensions and materials

Technical data, dimensions and materials of the valve bodies (Atex valve body option required) are the same of the standard valve body.
For further information, please see the relevant pages, as indicated in the table below.

Series	Size	Technical data					Dimensions					Standard materials
		3/2 sol./spring	3/2 sol./sol.	5/2 sol./spring	3/2 sol./sol.	5/3	3/2 sol./spring	3/2 sol./sol.	5/2 sol./spring	3/2 sol./sol.	5/3	
A1E A1K	1/8"	2.21.10	2.21.30	2.21.50	2.21.70	2.21.90	2.21.11	2.21.31	2.21.51	2.21.71	2.21.91	2.20.7
	1/4"	2.23.10	2.23.30	2.23.50	2.23.70	2.23.90	2.23.11	2.23.31	2.23.51	2.23.71	2.23.91	
	1/2"	2.25.10	2.25.30	2.25.50	2.25.70	2.25.90	2.25.11	2.25.31	2.25.51	2.25.71	2.25.91	
A1NE	1/4"	2.46.10	2.46.30	2.46.50	2.46.70	2.46.90	2.46.11	2.46.31	2.46.51	2.46.71	2.46.91	2.44.4
ISO..E ISO..K	ISO1	-	-	2.91.30	2.91.50	2.91.70	-	-	2.91.31	2.91.51	2.91.71	2.90.6
	ISO2	-	-	2.94.30	2.94.50	2.94.70	-	-	2.94.31	2.94.51	2.94.71	
ISO..EL ISO..KL	ISO1	-	-	2.92.30	2.92.50	2.92.70	-	-	2.92.31	2.92.51	2.92.71	
	ISO2	-	-	-	-	-	-	-	-	-	-	
AEF	1/4"	-	-	2.130.20	-	-	-	-	2.130.21	-	-	2.130.3

Solenoid operated valves, ATEX coils and connectors

Coils series ASA2/ATEXII2, encapsulated coil Ex mb

Main features

Version	Standard voltages	Code	Item
ASA2/ATEXII2	24 V DC	032192	ASA202400/ATEXII2
	24 V AC	032193	ASA202450/ATEXII2
	48 V AC	032196	ASA204850/ATEXII2
	110 V AC	032194	ASA211050/ATEXII2
	230 V AC	032195	ASA223050/ATEXII2



Technical data

Version	ASA2/ATEXII2				
Code	032192	032193	032196	032194	032195
Item	ASA202400/ATEXII2	ASA202450/ATEXII2	ASA204850/ATEXII2	ASA211050/ATEXII2	ASA223050/ATEXII2
Voltage	24 V DC	24 V AC	48 V AC	110 V AC	230 V AC
Frequency	-	50/60 Hz			
Size	30 mm				
Plunger Ø	9 mm				
Compliance	ATEX 2014/34/EU				
ATEX classification	II 2G Ex mb IIC T5 Gb II 2D Ex tb IIIC T95°C IP66 Db				
Current	Direct	Alternating			
Voltage tolerance	±10%				
Electrical consumption	3 W	5 VA			
Duty cycle	100% ED				
Class protection	IP 66				
Insulation class	F				
Temperature range	-20°C ÷ +50°C				
Material	Thermoset resin				
Valves matching*	Series A1E.., Series A1K.., Series A1NE.., Series ISO..., Series AEF..				
Connector	Cabled connector integrated				
Cable length	2 m				

*Valve body series A1NE require plate type PSN, see from page 2.56.1

Standard dimensions

II 2G Ex mb IIC T5 Gb
II 2D Ex tb IIIC T95°C IP66 Db

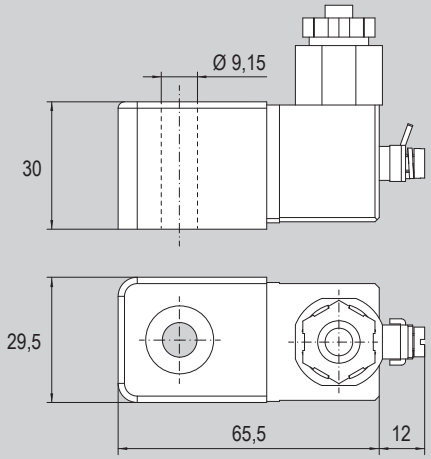

Notes

ROTARY
actuators



Find out our
key products

- **Solution for most applications**
- **Easy and intuitive choice**
- **Excellent value for money**
- **Wide availability**
- **Fast delivery**

Features and certifications

Pneumatic rotary actuators, single or double acting, with double rack, to automate industrial valves operation.
The coupling between actuator and valve could be direct, thanks to the holes according to ISO 5211-DIN 3337 standard in the bottom of the actuator, or through adapters.
The upper side of the actuator is according VDI/VDE 3845 NAMUR standards and allow mounting accessories such as CAM and position sensors. Side connections are threaded and for NAMUR valves (see from page 2.44.1 and from page 2.50.1).
Supplied as standard in compliance to Reach and RoHS directives, SIL certified and conforming to ATEX 2014/34/EU Directive.

Series AR..SE

from page 2.401.1



Series of aluminium rotary actuators, single acting, with double rack. Available from bore Ø 52 to Ø 400, 12 springs as standard, on request can be equipped with a different number of springs (from 5 to 12 for bores Ø 52 ÷ Ø 350, from 7 to 16 for bore Ø 400, see the table at page 2.401.2).



Series AR..DE

from page 2.403.1



Series of aluminium rotary actuators, double acting, with double rack. Available from bore Ø 32 to Ø 400.

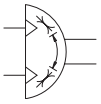

Code key

Series	Bore	Function	Flange [2]	Female Key [2]	Seals option
AR	**52**	**DE**	**F03/05**	**11**	**V**

Series
- AR

Bore
- 32 = Ø 32
- 40 = Ø 40
- 52 = Ø 52
- 63 = Ø 63
- 75 = Ø 75
- 83 = Ø 83
- 92 = Ø 92
- 105 = Ø 105
- 115 = Ø 115
- 125 = Ø 125
- 130 = Ø 130
- 140 = Ø 140
- 160 = Ø 160
- 190 = Ø 190
- 210 = Ø 210
- 240 = Ø 240
- 270 = Ø 270
- 300 = Ø 300
- 350 = Ø 350
- 400 = Ø 400

Function
- SE [1] = Single acting
- DE = Double acting

Flange [2]
- F03 = F03
- F03/05 = F03 / F05
- F05/07 = F05 / F07
- F07/10 = F07 / F10
- F10/12 = F10 / F12
- F14 = F14
- F16 = F16
- F16/25 = F16 / F25

Female Key [2]
- 9 = 9x11
- 11 = 11x14
- 14 = 14x18
- 17 = 17x21
- 22 = 22x26
- 27 = 27x31
- 36 = 36x40
- 46 = 46x50
- 55 = 55x60

Seals option
- V = FKM (-10°C ÷ +150°C)
- BT = Silicone (-40°C ÷ +80°C)

ATEX note

Actuators supplied according to 2014/34/EU ATEX Directive as standard

CE Ex II 2G Ex h IIC T6 Gb
II 2D Ex h IIIC T85°C Db

For further information on the ATEX 2014/34/EU Directive, on classifications and protections, see from page III.1

How to order

Series	Bore	Function	Flange	Female key	Option
AR	**52**	**DE**	**F03/05**	**11**	**V**

Notes

For standard materials see the table at page 2.400.4.

Options in the same grid are alternative to each others.

(1) Single acting acutators (SE) available from bore Ø 52.

(2) For matching between bore, flange and female key, see the single products data sheet.

Standard materials

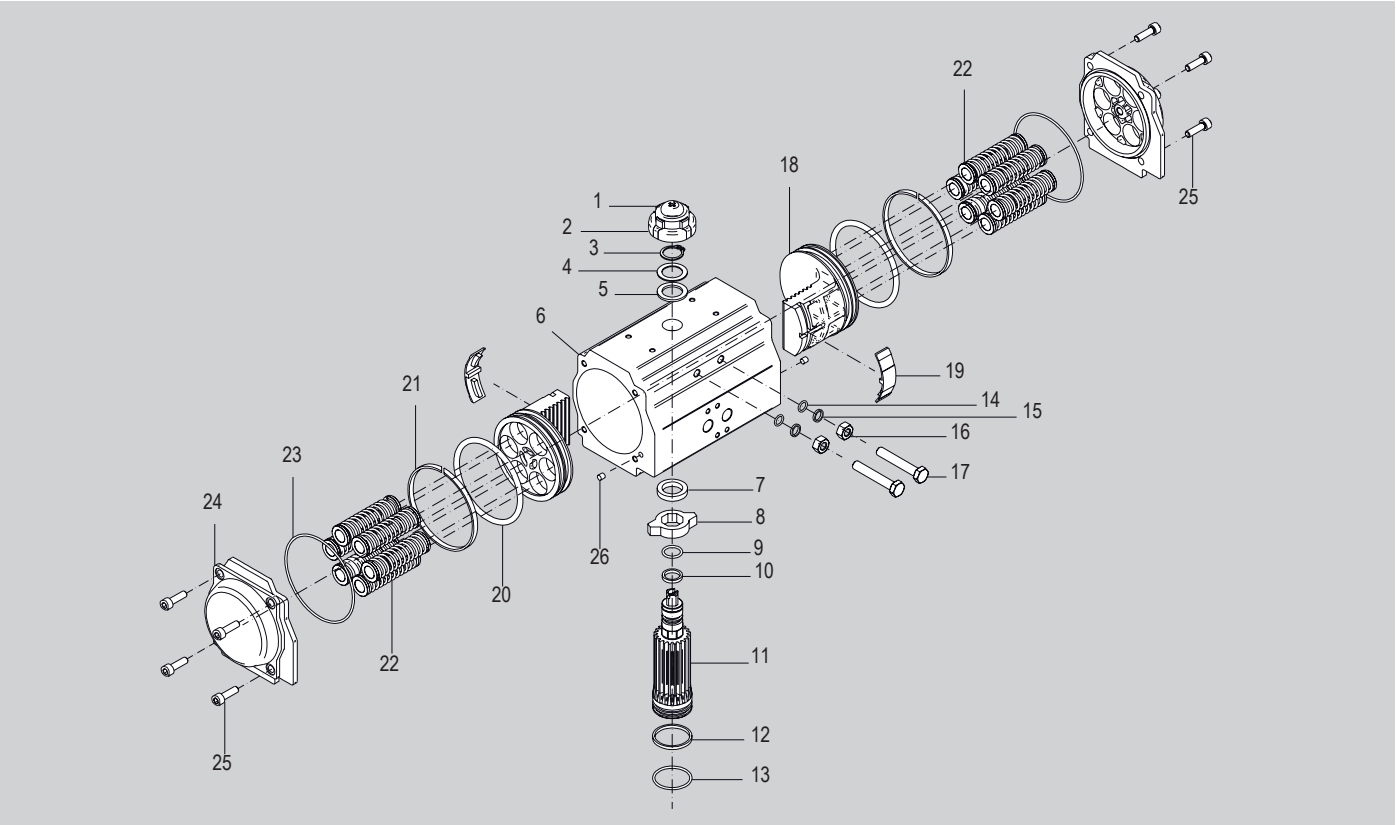

Position	Description	Quantity	Material
1	Indicator screw	1	ABS and Stainless Steel
2	Indicator	1	ABS
3	Seeger	1	Stainless Steel
4	Washer	1	Stainless Steel
5	Outside washer	1	Polyoxymethylene
6	Body	1	Extruded hard anodized aluminium alloy
7	Inside washer	1	Polyoxymethylene
8	Cam	1	C 45 steel
9	O-ring (Pinion top)	1	NBR
10	Bearing (Pinion top)	1	Polyoxymethylene
11	Pinion	1	Nickel-plated steel alloy
12	Bearing (Pinion bottom)	1	Polyoxymethylene
13	O-ring (Pinion bottom)	1	NBR
14	O-ring (Adjust screw)	2	NBR
15	Gasket (Adjust screw)	2	Stainless Steel
16	Nut (Adjust screw)	2	Stainless Steel
17	Adjust screw	2	Stainless Steel
18	Piston	2	Die-cast anodized aluminium
19	Guide (Piston)	2	Nylon 66
20	O-ring (Piston)	2	NBR
21	Bearing (Piston)	2	Polyoxymethylene
22	Spring*	0 ÷ 12**	Electrophoretic painted spring steel
23	O-ring (End cap)	2	NBR
24	End cap	2	Powder painted die-cast aluminium
25	Cap screw	8	Stainless Steel
26	Plug	1	NBR

*Only for single acting actuators

**16 spring for bore Ø 400

Accessories

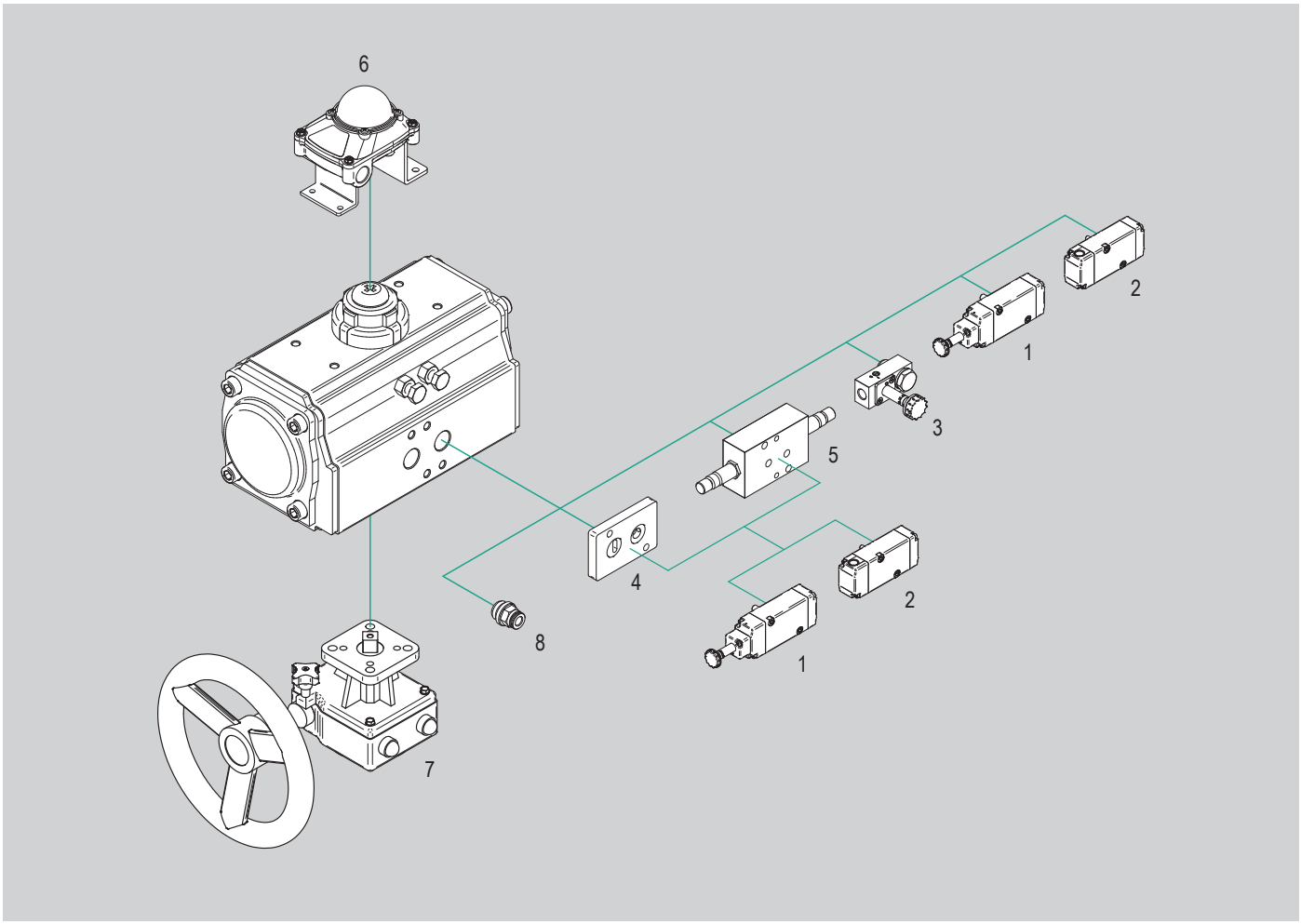

N.	Actuator bore	Item	Description	Compliance	Matching		Code key page	Data sheet page
					AR..SE	AR..DE		
1	Ø 52 ÷ 270	A1NE..	Solenoid valves NAMUR 1/4" 3/2	NAMUR	●	-		2.44.1
	Ø 32 ÷ 270		Solenoid valves NAMUR 1/4" 5/2 and 5/3		-	●		
	Ø 52 ÷ 270	A1NE..X..	Solenoid valves NAMUR 1/4" 3/2 ATEX	NAMUR 2014/34/EU ATEX	●	-		2.320.1
	Ø 32 ÷ 270		Solenoid valves NAMUR 1/4" 5/2 and 5/3 ATEX		-	●		
2	Ø 52 ÷ 270	A1NP..	Valves NAMUR 1/4" 3/2	NAMUR	●	-		2.50.1
	Ø 32 ÷ 270		Valves NAMUR 1/4" 5/2 and 5/3		-	●		
	Ø 52 ÷ 270	A1NP..X..	Valves NAMUR 1/4" 3/2 ATEX	NAMUR 2014/34/EU ATEX	●	-		2.320.1
	Ø 32 ÷ 270		Valves NAMUR 1/4" 5/2 and 5/3 ATEX		-	●		
3	Ø 52 ÷ 270	A1E2..MD	22 mm directly operated solenoid valves	-	●	-	2.405.1	2.10.1
4	Ø 32 ÷ 270	PNF..	Mounting plate*	NAMUR	●	●		2.430.50
5	Ø 52 ÷ 270	APNRSR	Speed regulators for actuators	NAMUR	●	-		2.430.1
	Ø 32 ÷ 270	APNRDA		NAMUR	-	●		
6	Ø 32 ÷ 400	SB200..	Aluminium limit switch box	-	●	●		2.426.20
		SB200/Exia..		2014/34/EU ATEX	●	●		2.426.25
		SB500..		2014/34/EU ATEX	●	●		2.426.50
		SB700..	Tecnopolymer limit switch box	-	●	●		2.426.90
7	Ø 32 ÷ 400	GDB..	Handwheel gearbox	ISO 5211	●	●		2.428.10
8	Ø 32 ÷ 400	R..	Push-in fittings	UNI ISO 228/1 UNI ISO7/1 ISO R/232	●	●	4.2.1	

Key
● matching accessory; - not matching accessory

Rotary actuators
Single acting aluminium rotary actuators

Main features

Bore	Code	Item	Symbol
Ø 52	810103	AR52SEF03/0511	
Ø 63	810107	AR63SEF05/0714	
Ø 75	810109	AR75SEF05/0714	
Ø 83	810111	AR83SEF05/0717	
Ø 92	810113	AR92SEF05/0717	
Ø 105	810115	AR105SEF07/1022	
Ø 115	810165	AR115SEF07/1022	
Ø 125	810117	AR125SEF07/1022	
Ø 130	810167	AR130SEF10/1227	
Ø 140	810139	AR140SEF10/1227	
Ø 160	810122	AR160SEF10/1227	
Ø 190	810147	AR190SEF1436	
Ø 210	810140	AR210SEF1436	
Ø 240	810148	AR240SEF1646	
Ø 270	810149	AR270SEF1646	
Ø 300	810158	AR300SEF1646	
Ø 350	810159	AR350SEF16/2546	
Ø 400	810160	AR400SEF16/2555	





Technical data

Version	Single acting rotary actuator																	
Bore	Ø 52	Ø 63	Ø 75	Ø 83	Ø 92	Ø 105	Ø 105	Ø 125	Ø 130	Ø 140	Ø 160	Ø 190	Ø 210	Ø 240	Ø 270	Ø 300	Ø 350	Ø 400
Code	810103	810107	810109	810111	810113	810115	810165	810117	810167	810139	810122	810147	810140	810148	810149	810158	810159	810160
Fluid	Compressed air with or without lubrication. Lubrication, if started, must be continued.																	
Pressure range	2 ÷ 8 bar (for further information see output torque table from page 2.401.2)																	
Temperature range	-20°C ÷ +80°C (standard) -10°C ÷ +150°C (V) -40°C ÷ +80°C (BT)																	
Connections	G 1/4" NAMUR															G 1/2" NAMUR		
ISO flange	F03/F05	F05/F07				F07/F10			F10/F12			F14		F16			F16/F25	
Female key	11x14	14x18		17x25		22x26			27x31			36x40		46x50				55x60
Spring number	12																	16
Weight (Kg)	1,35	2,19	2,86	3,64	5,35	6,76	9,3	10,0	13,7	16,5	24,4	40,2	49,2	70,0	100	141	220	285
ATEX compliance	II 2G Ex h IIC T6 Gb II 2D Ex h IIIC T85°C Db																	

Output torque — Unit: Nm

Actuator		Air pressure (bar)															
Size	Spring number	2,5		3		4		5		6		7		8		Springs output	
		0°	90°	0°	90°	0°	90°	0°	90°	0°	90°	0°	90°	0°	90°	90°	0°
Ø 52	5	5.7	3.8	7.6	5.7											6.2	4.3
	6	4.9	2.5	6.9	4.5	10.9	8.5									7.4	5.0
	7	4.0	1.3	6.0	3.3	9.8	7.3	14.0	10.4							8.6	5.9
	8			5.2	2.0	9.2	6.0	13.2	9.1	17.2	14.1					9.9	6.7
	9			4.3	0.8	8.3	4.8	12.3	7.9	16.3	12.8	20.3	16.8			11.1	7.6
	10					7.4	3.6	11.5	6.7	15.5	11.6	19.5	15.6			12.4	8.5
	11					6.6	2.3	10.6	5.4	14.6	10.4	18.6	14.3	22.6	18.3	13.6	9.3
	12							9.7	4.2	13.8	9.1	17.8	12.2	21.8	17.1	14.8	10.2
Ø 63	5	11.4	7.7	15.0	11.4	22.3	14.9									10.4	6.8
	6	10.1	5.7	13.6	9.3	20.9	16.6	29.3	23.9							12.5	8.2
	7	8.6	3.6	12.5	7.2	19.5	14.5	26.8	21.9							14.6	9.6
	8			10.9	5.1	18.2	12.4	25.5	19.8	32.8	27.0	40.1	34.3			16.7	10.9
	9					16.8	10.4	24.1	17.7	31.4	24.9	38.7	32.2			18.8	12.3
	10					1.4	8.2	22.8	15.6	30.0	22.8	37.3	30.1	44.7	37.4	20.9	13.7
	11							21.5	13.5	28.7	20.7	36.0	28.0	43.3	35.3	22.9	15.0
	12							20.0	11.4	27.3	18.6	34.6	25.9	41.9	33.3	25.0	16.4
Ø 75	5	14.5	10.6	19.4	15.5	29.5	25.7									14.5	10.5
	6	12.4	7.6	17.3	12.6	27.4	22.7	37.5	32.8							17.4	12.7
	7	10.4	4.8	15.2	9.7	25.3	19.9	35.4	29.9							20.3	14.8
	8			13.1	6.8	23.1	16.9	33.3	27.0	43.2	37.0	53.3	47.0			23.2	16.9
	9					19.0	14.1	31.2	24.1	41.1	34.1	51.2	44.2			26.1	19.0
	10						11.1	28.8	21.2	39.0	31.2	49.1	41.2	59.1	51.2	29.0	21.1
	11							27.0	18.3	37.0	28.3	47.0	38.4	57.0	48.4	31.9	23.2
	12							24.9	15.4	34.9	25.4	44.9	35.4	54.9	45.4	34.7	25.3
Ø 83	5	23.3	16.1	31.1	24.0	46.8	39.7									23.0	15.8
	6	20.1	11.5	28.0	19.3	43.7	35.1	59.4	50.7							27.6	19.0
	7	17.0	6.9	24.8	14.8	40.5	30.5	56.2	46.2							32.2	22.1
	8			21.7	10.1	37.4	25.8	53.1	41.5	68.8	57.2	84.5	72.9			36.8	25.3
	9					34.2	21.3	49.9	37.0	65.6	52.6	81.2	68.3			41.4	28.5
	10					31.0	16.6	46.7	32.3	62.4	48.0	78.1	63.7	93.8	79.3	46.0	31.6
	11							43.6	27.7	59.3	43.4	75.0	59.1	90.6	74.8	50.6	34.8
	12							40.4	23.2	56.1	38.9	71.7	54.5	87.4	70.2	55.2	38.0
Ø 92	5	33.1	22.0	44.2	33.2	66.8	55.8									34.4	23.3
	6	28.4	15.2	39.6	26.4	62.2	49.0	84.8	71.6							41.2	28.0
	7	23.8	8.2	34.9	19.4	57.5	42.1	80.2	64.7							48.1	32.7
	8			31.3	12.6	52.9	35.2	75.5	57.9	98.1	80.5	120.7	103.0			55.0	37.3
	9					48.2	28.4	70.9	51.0	93.5	73.6	116.0	96.1			61.9	42.0
	10					43.6	21.5	66.2	44.1	88.8	66.7	111.3	89.2	134.0	111.8	68.7	46.7
	11							61.5	37.2	84.1	59.9	106.6	82.4	129.2	105.0	75.6	81.4
	12							56.8	30.4	79.4	53.0	101.9	75.5	124.5	98.1	82.5	56.0
Ø 105	5	51.0	33.4	67.5	49.9	100.6	83.0									49.2	31.6
	6	44.7	23.5	61.1	40.0	94.2	73.2	127.3	106.2							59.1	38.0
	7	38.4	13.7	54.9	30.3	87.9	63.4	121.0	96.4							68.9	44.3
	8			48.5	20.4	81.6	53.5	114.7	86.5	147.7	119.6	180.8	152.7			78.7	50.6
	9					75.3	43.7	108.4	76.8	141.5	109.8	174.5	142.9			88.6	56.9
	10					68.9	33.4	102.0	66.5	135.1	99.6	168.2	132.9	201.2	165.7	98.4	63.3
	11							95.7	57.0	128.7	90.1	161.8	123.1	194.8	156.2	108.3	69.6
	12							89.4	47.5	122.5	80.6	155.5	113.6	188.6	146.7	118.1	75.9
Ø 115	5	65	43	87	65	130	108									65	43
	6	56	30	78	52	121	95	164	138							78	52
	7	47	17	69	39	112	82	155	125							91	61
	8			61	26	104	69	147	112	190	155	233	198			104	69
	9					95	56	138	99	181	142	224	185			117	78
	10					86	43	129	86	172	129	215	172	259	216	130	87
	11							121	73	164	116	207	159	251	203	143	95
	12							112	60	156	104	198	146	242	190	156	104

Output torque — Unit: Nm

Actuator		Air pressure (bar)															
Size	Spring number	2,5		3		4		5		6		7		8		Springs output	
		0°	90°	0°	90°	0°	90°	0°	90°	0°	90°	0°	90°	0°	90°	90°	0°
Ø 125	5	73	47	98	72	148	122									79	52
	6	63	31	88	56	138	107	188	157							94	63
	7	52	15	77	50	127	90	178	141							110	73
	8			67	25	117	75	167	125	217	176	268	226			125	84
	9					107	59	157	109	207	159	257	210			141	90
	10					96	44	146	94	196	144	247	194	297	245	157	105
	11							136	78	186	128	236	178	286	228	173	115
	12							125	63	176	113	226	163	276	213	188	125
Ø 130	5	107	68	142	103	211	1720									105	66
	6	93	46	128	81	197	150	266	219							127	80
	7	80	25	115	60	184	129	253	198							148	93
	8			101	39	170	108	239	177	309	247	378	316			169	107
	9					157	87	226	156	296	226	365	295			190	120
	10					144	65	213	134	283	204	352	273	422	343	212	133
	11							199	113	269	183	338	252	408	322	233	147
	12							185	91	255	161	324	230	394	300	255	161
Ø 140	5	128	85	171	127	256	213									129	86
	6	111	59	154	102	239	187	325	273							155	103
	7	94	33	137	76	222	162	308	247							181	120
	8			120	50	205	136	291	221	376	307	462	392			206	137
	9					187	110	273	196	358	281	444	367			232	155
	10					170	84	256	169	341	255	427	340	512	426	258	172
	11							238	143	324	229	409	314	495	400	284	189
	12							221	118	307	203	392	289	478	374	310	206
Ø 160	5	193	124	259	191	392	324									208	140
	6	165	83	232	149	365	282	498	415							250	168
	7	137	41	203	107	336	240	469	373							292	196
	8			176	66	309	199	442	273	575	465	708	598			333	223
	9					280	157	413	260	546	423	679	556			375	251
	10					253	115	386	248	519	381	652	514	785	647	417	279
	11							358	207	491	340	624	473	757	606	458	307
	12							330	165	463	298	596	431	729	564	500	355
Ø 190	5	332	222	438	329	651	542									309	200
	6	292	161	398	267	611	480	824	693							371	240
	7	252	99	358	205	571	418	784	631							433	280
	8			318	143	531	356	744	569	957	782	1169	995			495	320
	9					491	295	704	507	917	720	1130	933			557	360
	10					451	233	664	446	877	658	1090	871	1302	1084	618	400
	11							624	384	837	597	1050	809	1263	1022	680	440
	12							584	322	797	535	1010	748	1223	960	742	480
Ø 210	5	390	285	523	418	789	684									380	275
	6	335	209	468	342	734	608	1000	874							456	330
	7	280	133	413	266	679	532	945	798							532	385
	8			358	190	624	456	890	722	1156	988	1422	1254			608	440
	9					569	380	835	646	1101	912	1367	1178			684	495
	10					514	304	780	570	1046	836	1312	1102	1578	1368	760	550
	11							725	494	991	760	1257	1026	1523	1292	836	605
	12							670	418	936	684	1202	950	1468	1216	912	660
Ø 240	5	552	409	744	600	1129	985									554	410
	6	470	297	662	489	1047	874	1432	1259							665	492
	7	388	187	580	379	964	764	1349	1149							775	575
	8			498	268	883	653	1267	1037	1652	1422	2037	1807			886	656
	9					800	542	1185	926	1569	1311	1954	1696			998	739
	10					718	431	1103	816	1488	1201	1872	1586	2257	1970	1108	821
	11							1021	705	1406	1090	1791	1474	2176	1859	1219	903
	12							939	594	1323	979	1708	1363	2093	1748	1330	985

Output torque

Unit: Nm

Actuator		Air pressure (bar)															
Size	Spring number	2,5		3		4		5		6		7		8		Springs output	
		0°	90°	0°	90°	0°	90°	0°	90°	0°	90°	0°	90°	0°	90°	90°	0°
Ø 270	5	903	675	1195	968	1779	1552									787	560
	6	790	519	1083	811	1667	1396	2252	1981							943	672
	7	679	361	972	654	1556	1238	2141	1900							1101	783
	8			860	497	1444	1081	2029	1823	2614	2252	3199	2836			1258	895
	9					1332	923	1917	1666	2502	2094	3087	2678			1416	1007
	10					1220	767	1805	1509	2390	1937	2974	2521	3560	3107	1572	1119
	11							1693	1352	2278	1779	2862	2364	3448	2949	1730	1231
	12							1582	1037	2167	1623	2751	2207	3336	2792	1887	1342
Ø 300	5	1097	729													1061	730
	6	935	494	1316	875											1273	876
	7	772	258	1153	639	1916	1402									1485	1022
	8			991	403	1754	1166	2517	1929							1697	1168
	9					1592	930	2255	1693	3118	2456					1909	1314
	10					1430	695	2193	1458	2956	2221	3719	2984	4482	3747	2122	1460
	11							2030	1222	2793	1985	3556	2748	4319	3511	2334	1606
	12							1868	986	2631	1749	3394	2512	4157	3275	2546	1752
Ø 350	5	1552	964													1702	1173
	6	1292	586	1863	1157											2043	1408
	7	1031	208	1602	779	2745	1922									2383	1642
	8			1341	401	2484	1544	3626	2686							2724	1877
	9					2224	1165	3336	2307	4508	3449					3064	2112
	10					1963	787	3105	1929	4247	3071	5390	4214	6532	5356	3405	2346
	11							2844	1551	3986	2693	5129	3836	6271	4978	3745	2581
	12							2584	1172	3726	2314	4869	3457	6011	4599	4086	2816
Ø 400	7	2028	869													2880	1837
	8	1736	411	2550	1225											3292	2100
	9			2259	768	3887	2396									3703	2362
	10			1967	311	3595	1939	5223	3567							4115	2624
	11					3303	1482	4931	3110	6559	4738					4526	2887
	12					3012	1025	4640	2653	6268	4281	7895	5908	9523	7536	4938	3149
	13							4348	2195	5976	3823	7603	5450	9231	7078	5349	3412
	14							4057	1738	5685	3366	7312	4993	8940	6621	5761	3674
	15							3756	1281	4393	2909	7020	4536	8648	6164	6172	3937
	16									5101	2452	6728	4079	8356	5707	6584	4199

Important note

Output torque air decreasing from 90° - 0°; Output torque springs decreasing from 90° - 0°

Springs mounting for single acting actuators*

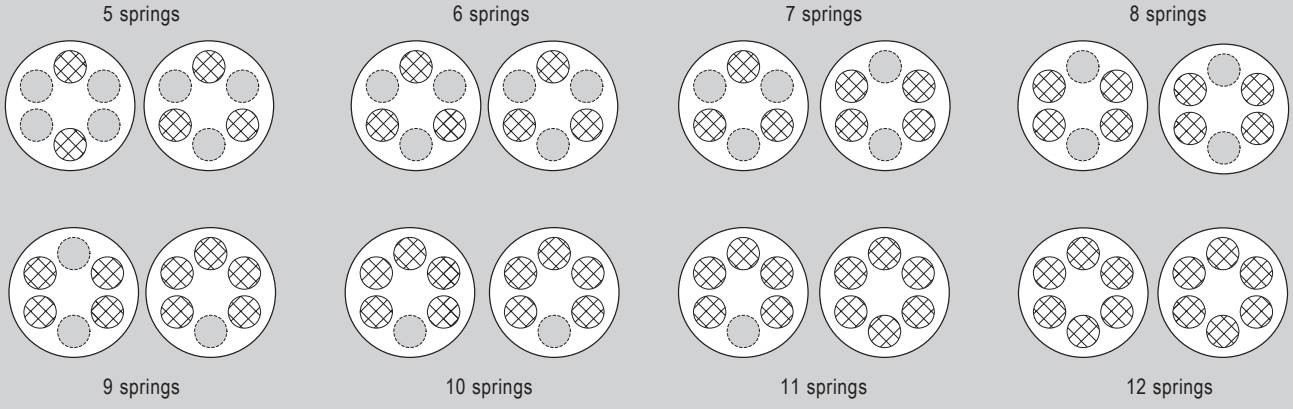

* For information on spring mounting of actuator size Ø 400, please contact the sales department

Operation time*

Unit: s

Actuator			Springs													
Item	Code	Size	3 + 3		3 + 4		4 + 4		4 + 5		5 + 5		5 + 6		6 + 6	
			0°-90°	90°-0°	0°-90°	90°-0°	0°-90°	90°-0°	0°-90°	90°-0°	0°-90°	90°-0°	0°-90°	90°-0°	0°-90°	90°-0°
AR52SEF03/0511	810103	Ø 52	2.46	0.48	2.48	0.46	2.50	0.44	2.52	0.42	2.54	0.40	2.56	0.38	2.58	0.36
AR63SEF05/0714	810107	Ø 63	2.54	0.56	2.56	0.54	2.58	0.52	2.60	0.50	2.62	0.48	2.64	0.46	2.66	0.44
AR75SEF05/0714	810109	Ø 75	2.62	0.64	2.64	0.62	2.66	0.60	2.68	0.58	2.70	0.56	2.72	0.54	2.74	0.20
AR83SEF05/0717	810111	Ø 83	2.71	0.73	2.73	0.71	2.75	0.69	2.77	0.67	2.79	0.65	2.81	0.63	2.83	0.61
AR92SEF05/0717	810113	Ø 92	2.89	0.86	2.91	0.84	2.93	0.82	2.95	0.80	2.97	0.78	2.99	0.76	3.01	0.74
AR105SEF07/1022	810115	Ø 105	3.14	0.91	3.16	0.89	3.18	0.87	3.20	0.85	3.22	0.83	3.24	0.81	3.26	0.79
AR115SEF07/1022	810165	Ø 115	3.59	1.02	3.61	1.00	3.62	0.98	3.64	0.96	3.66	0.95	3.67	0.93	3.69	0.91
AR125SEF07/1022	810117	Ø 125	4.24	1.20	4.26	1.18	4.28	1.16	4.30	1.14	4.32	1.12	4.43	1.10	4.36	1.08
AR130SEF10/1227	810167	Ø 130	4.33	1.22	4.36	1.32	4.49	1.26	4.58	1.25	4.50	1.21	4.49	1.21	4.54	1.18
AR140SEF10/1227	810139	Ø 140	4.40	1.35	4.40	1.33	4.62	1.31	4.64	1.29	4.66	1.27	4.68	1.25	4.68	1.22
AR160SEF10/1227	810122	Ø 160	4.74	1.77	4.76	1.75	4.78	1.73	4.80	1.71	4.82	1.69	4.82	1.67	4.84	1.65
AR190SEF1436	810147	Ø 190	5.75	3.70	5.77	3.50	5.75	3.48	5.77	3.46	5.79	3.44	5.80	3.42	5.83	3.40
AR210SEF1436	810140	Ø 210	8.25	4.80	8.40	4.60	8.42	4.58	8.44	4.56	8.46	4.54	8.48	4.52	8.50	4.50
AR240SEF1646	810148	Ø 240	16.2	5.14	16.40	5.12	16.42	5.10	16.44	4.90	16.6	4.98	16.8	4.86	17.00	4.84
AR270SEF1646	810149	Ø 270	17.60	6.28	17.80	6.26	17.60	6.24	17.80	6.20	18.00	6.18	18.20	6.16	18.40	6.14
AR300SEF1646	810158	Ø 300	24.00	13.20	24.50	13.00	24.40	12.80	24.30	12.60	24.50	12.58	24.70	12.56	24.90	12.54
AR350SEF16/2546	810159	Ø 350	31.00	17.30	31.50	17.00	31.30	16.80	31.00	16.60	31.20	16.58	31.40	16.56	31.60	16.54
AR400SEF16/2555	810160	Ø 400	45.00	27.00	51.00	27.00	51.30	26.80	51.50	26.80	51.70	26.60	51.90	26.40	52.10	26.20

* With pressure at 5 bar

Air consumption

Unit: l.

Item	Code	Size	Air volume opening (A1)	Air volume closing (A2)
AR52SEF03/0511	810103	Ø 52	0.12 l.	-
AR63SEF05/0714	810107	Ø 63	0.21 l.	-
AR75SEF05/0714	810109	Ø 75	0.30 l.	-
AR83SEF05/0717	810111	Ø 83	0.43 l.	-
AR92SEF05/0717	810113	Ø 92	0.64 l.	-
AR105SEF07/1022	810115	Ø 105	0.95 l.	-
AR115SEF07/1022	810165	Ø 115	1.30 l.	
AR125SEF07/1022	810117	Ø 125	1.60 l.	-
AR140SEF10/1227	810167	Ø 130	2.30 l.	
AR140SEF10/1227	810139	Ø 140	2.50 l.	-
AR160SEF10/1227	810122	Ø 160	3.70 l.	-
AR190SEF1436	810147	Ø 190	5.90 l.	-
AR210SEF1436	810140	Ø 210	7.50 l.	-
AR240SEF1646	810148	Ø 240	11.0 l.	-
AR270SEF1646	810149	Ø 270	17.0 l.	-
AR300SEF1646	810158	Ø 300	23.8 l.	-
AR350SEF16/2546	810159	Ø 350	35.1 l.	-
AR400SEF16/2555	810160	Ø 400	52.6 l.	-

To calculate the actuator's cycle consumption use the formula on the right.
For "A1" and "A2" values refer to the tables above,"P" is for the air pressure.

$$l./ciclo = A1 + A2 \times \frac{P + 1{,}013\ bar}{1{,}013\ bar}$$

Standard dimensions

Type: **AR..SE**

II 2G Ex h IIC T6 Gb
II 2D Ex h IIIC T85°C Db

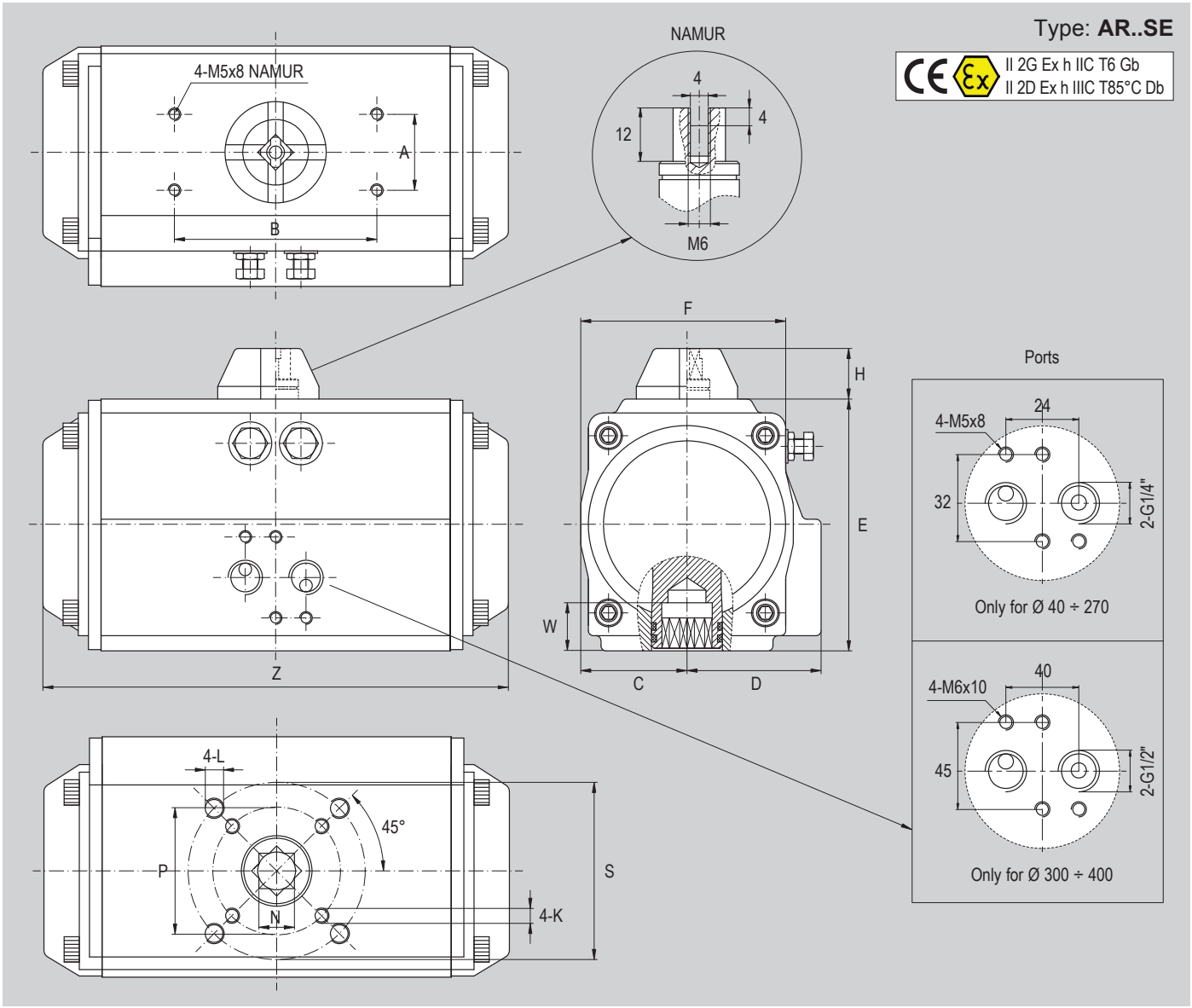

Item	Code	Size	A	B	C	D	E	F	H	ØP	ØS	K	L	N	W	Z	Connection	ISO flange
AR52SEF03/0511	810103	Ø 52	30	80	30.5	41	72	65	20	36	50	M5x8	M6x9	11x14	14	147	G 1/4" NAMUR	F03 / F05
AR63SEF05/0714	810107	Ø 63	30	80	36	47	88	72	20	50	70	M6x10	M8x13	14x18	18	165	G 1/4" NAMUR	F05 / F07
AR75SEF05/0714	810109	Ø 75	30	80	42	53	99.5	81	20	50	70	M6x10	M8x13	14x18	18	182	G 1/4" NAMUR	F05 / F07
AR83SEF05/0717	810111	Ø 83	30	80	46	57	109	92	20	50	70	M6x10	M8x13	17x21	21	208	G 1/4" NAMUR	F05 / F07
AR92SEF05/0717	810113	Ø 92	30	80	50	58.5	116.5	98	20	50	70	M6x10	M8x13	17x21	21	262	G 1/4" NAMUR	F05 / F07
AR105SEF07/1022	810115	Ø 105	30	80	58	66.5	133	109.5	20	70	102	M8x13	M10x16	22x26	26	270	G 1/4" NAMUR	F07 / F10
AR115SEF07/1022	810165	Ø 115	30	80	62	72	144	119	20	70	102	M8x13	M10x16	22x26	26	298	G 1/4" NAMUR	F07 / F10
AR125SEF07/1022	810117	Ø 125	30	80	67	75	155	127.5	20	70	102	M8x13	M10x16	22x26	26	301	G 1/4" NAMUR	F07 / F10
AR130SEF10/1227	810167	Ø 130	30	80	74	74	160	130	20	102	125	M10x16	M12x19	27x31	31	367	G 1/4" NAMUR	F10 / F12
AR140SEF10/1227	810139	Ø 140	30	80	76	76	172	137.5	20	102	125	M10x16	M12x19	27x31	31	395	G 1/4" NAMUR	F10 / F12
AR160SEF10/1227	810122	Ø 160	30	80	87	87	197	158	20	102	125	M10x16	M12x19	27x31	31	454	G 1/4" NAMUR	F10 / F12
AR190SEF1436	810147	Ø 190	30	130	103	103	230	189	30	-	140	-	M16x24	36x40	50	528	G 1/4" NAMUR	F14
AR210SEF1436	810140	Ø 210	30	130	113	113	255	211	30	-	140	-	M16x24	36x40	50	536	G 1/4" NAMUR	F14
AR240SEF1646	810148	Ø 240	30	130	130	130	289	245	30	-	165	-	M20x25	46x50	60	608	G 1/4" NAMUR	F16
AR270SEF1646	810149	Ø 270	30	130	147	147	328	273	30	-	165	-	M20x25	46x50	60	721	G 1/4" NAMUR	F16
AR300SEF1646	810158	Ø 300	30	130	203	203	348	406	30	165	215	M20x25	M20x25	46x60	63	769	G 1/2" NAMUR	F16
AR350SEF16/2546	810159	Ø 350	30	130	230	230	408	460	30	165	254	M20x25	M16x24*	46x60	63	909	G 1/2" NAMUR	F16 / F25
AR400SEF16/2555	810160	Ø 400	30	130	258	258	480	516	30	165	254	M20x25	M16x24*	55x60	73	925	G 1/2" NAMUR	F16 / F25

* 8 holes

Rotary actuators
Double acting aluminium rotary actuators

Main features

Bore	Code	Item	Symbol
Ø 32	810101	AR32DEF0309	
Ø 40	810128	AR40DEF03/0511	
Ø 52	810102	AR52DEF03/0511	
Ø 63	810106	AR63DEF05/0714	
Ø 75	810108	AR75DEF05/0714	
Ø 83	810110	AR83DEF05/0717	
Ø 92	810112	AR92DEF05/0717	
Ø 105	810114	AR105DEF07/1022	
Ø 115	810164	AR115DEF07/1022	
Ø 125	810116	AR125DEF07/1022	
Ø 130	810166	AR130DEF10/1227	
Ø 140	810130	AR140DEF10/1227	
Ø 160	810119	AR160DEF10/1227	
Ø 190	810143	AR190DEF1436	
Ø 210	810144	AR210DEF1436	
Ø 240	810145	AR240DEF1646	
Ø 270	810146	AR270DEF1646	
Ø 300	810155	AR300DEF1646	
Ø 350	810156	AR350DEF16/2546	
Ø 400	810157	AR400DEF16/2555	



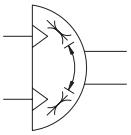

Technical data

Version	Double acting rotary actuator																			
Bore	Ø 32	Ø 40	Ø 52	Ø 63	Ø 75	Ø 83	Ø 92	Ø 105	Ø 115	Ø 125	Ø 130	Ø 140	Ø 160	Ø 190	Ø 210	Ø 240	Ø 270	Ø 300	Ø 350	Ø 400
Code	810101	810128	810102	810106	810108	810110	810112	810114	810164	810116	810166	810130	810119	810143	810144	810145	810146	810155	810156	810157
Fluid	Compressed air with or without lubrication. Lubrication, if started, must be continued.																			
Pressure range	2 ÷ 8 bar (for further information see output torque table from page 2.403.2)																			
Temperature range	-20°C ÷ +80°C																			
Ports	G1/8"	G 1/4" NAMUR																G 1/2" NAMUR		
ISO flange	F03	F03/F05		F05/F07				F07/F10			F10/F12			F14		F16			F16/F25	
Female key	9x14	11x14		14x18		17x25		22x26			27x31			36x40		46x50				55x60
Weight (Kg)	0.80	0.97	1.22	2.02	2.60	3.23	4.58	5.92	8.18	8.68	11.2	14.1	20.6	33.2	39.7	57.0	78.7	114	171	240
ATEX compliance	II 2G Ex h IIC T6 Gb II 2D Ex h IIIC T85°C Db																			

Output torque

Unit: Nm

Actuator	Air pressure (bar)									
	2	2,5	3	4	4,5	5	5,5	6	7	8
32	3.1	3.8	4.6	6.1	6.9	7.6	8.4	9.2	10.7	12.2
40	4.8	6	7.2	9.5	10.7	11.9	13.1	14.3	16.7	19.1
52	8.0	10.0	12.0	16.0	18.0	20.0	21.9	23.9	27.9	31.9
63	14.6	18.2	21.9	29.2	32.8	36.5	40.1	43.8	51.1	58.4
75	20.1	25.1	30.1	40.1	45.1	50.2	55.2	60.2	70.2	80.3
83	31.4	39.2	47.0	62.7	70.5	78.4	86.2	94.1	109.7	125.4
92	45.1	56.4	67.7	90.3	101.6	112.9	124.1	135.4	158.0	180.6
105	66.1	82.7	99.2	132.2	148.8	165.3	181.8	198.4	231.4	264.5
115	86.0	108.0	130.1	173.0	194.0	216.0	238.0	259.0	302.0	346.0
125	100.3	125.4	150.5	200.6	225.7	250.8	275.9	301.0	351.1	401.3
130	138.0	173.0	208.0	277.0	312.0	346.0	381.0	416.0	485.0	555.0
140	171.0	213.8	256.5	342.0	384.8	427.5	470.3	513.0	598.5	684.0
160	266.0	332.5	399.0	532.0	598.5	665.0	731.5	798.0	931.0	1064.0
190	425.6	532.0	638.4	851.2	957.6	1064.0	1170.4	1276.8	1489.6	1702.4
210	532.0	665.0	798.0	1064.0	1197.0	1330.0	1463.0	1596.0	1862.0	2128.0
240	796.5	961.9	1154.3	1539.0	1731.4	1923.8	2116.1	2308.5	2693.3	3078.0
270	1169.6	1462.1	1754.5	2339.3	2631.7	2924.1	3216.5	3508.9	4093.7	4678.6
300	1526.0	1908.0	2289.0	3052.0	3434.0	3815.0	4187.0	4578.0	5341.0	6104.0
350	2285.0	2856.0	3427.0	4570.0	5141.0	5712.0	6283.0	6854.0	7997.0	9139.0
400	3256.0	4070.0	4884.0	6512.0	7326.0	8140.0	8954.0	9768.0	11396.0	13024.0

Important note

Constant output torque 90° - 0° / 0° - 90 0°

Operation time*

Unit: s

Actuator			0° - 90°	90° - 0°
Item	Code	Size		
AR32DEF0309	810101	Ø 32	0.50	0.50
AR40DEF03/0511	810128	Ø 40	0.55	0.55
AR52DEF03/0511	810102	Ø 52	0.60	0.60
AR63DEF05/0714	810106	Ø 63	0.70	0.70
AR75DEF05/0714	810108	Ø 75	0.80	0.70
AR83DEF05/0717	810110	Ø 83	0.90	0.80
AR92DEF05/0717	810112	Ø 92	1.00	1.00
AR105DEF07/1022	810114	Ø 105	1.50	1.50
AR115DEF07/1022	810164	Ø 115	1.70	1.70
AR125DEF07/1022	810116	Ø 125	2.00	2.00
AR130DEF10/1227	810116	Ø 130	2.20	2.20
AR140DEF10/1227	810130	Ø 140	2.50	2.50
AR160DEF10/1227	810119	Ø 160	4.00	3.00
AR190DEF1436	810143	Ø 190	5.00	4.00
AR210DEF1436	810144	Ø 210	5.00	4.00
AR240DEF1646	810145	Ø 240	6.00	6.00
AR270DEF1646	810146	Ø 270	8.00	8.00
AR300DEF1646	810155	Ø 300	12.00	12.00
AR350DEF16/2546	810156	Ø 350	14.00	14.00
AR400DEF16/2555	810157	Ø 400	15.00	15.00

* With pressure at 5 bar

Air consumption

Unit: l.

Item	Code	Size	Air volume opening (A1)	Air volume closing (A2)
AR32DEF0309	810101	Ø 52	0.04 l.	0.05 l.
AR40DEF03/0511	810128	Ø 63	0.08 l.	0.11 l.
AR52DEF03/0511	810102	Ø 52	0.12 l.	0.16 l.
AR63DEF05/0714	810106	Ø 63	0.21 l.	0.23 l.
AR75DEF05/0714	810108	Ø 75	0.30 l.	0.34 l.
AR83DEF05/0717	810110	Ø 83	0.43 l.	0.47 l.
AR92DEF05/0717	810112	Ø 92	0.64 l.	0.73 l.
AR105DEF07/1022	810114	Ø 105	0.95 l.	0.88 l.
AR115DEF07/1022	810164	Ø 115	1.30 l.	1.20 l.
AR125DEF07/1022	810116	Ø 125	1.60 l.	1.40 l.
AR130DEF10/1227	810166	Ø 130	2.30 l.	2.10 l.
AR140DEF10/1227	810130	Ø 140	2.50 l.	2.20 l.
AR160DEF10/1227	810119	Ø 160	3.70 l.	3.20 l.
AR190DEF1436	810143	Ø 190	5.90 l.	5.40 l.
AR210DEF1436	810144	Ø 210	7.50 l.	7.50 l.
AR240DEF1646	810145	Ø 240	11.00 l.	9.00 l.
AR270DEF1646	810146	Ø 270	17.00 l.	14.00 l.
AR300DEF1646	810155	Ø 300	23.80 l.	29.70 l.
AR350DEF16/2546	810156	Ø 350	35.10 l.	46.30 l.
AR400DEF16/2555	810157	Ø 400	52.60 l.	56.00 l.

To calculate the actuator's cycle consumption use the formula on the right.
For "A1" and "A2" values refer to the tables above,"P" is for the air pressure.

$$\text{l./ciclo} = A1 + A2 \times \frac{P + 1{,}013\ \text{bar}}{1{,}013\ \text{bar}}$$

Standard dimensions

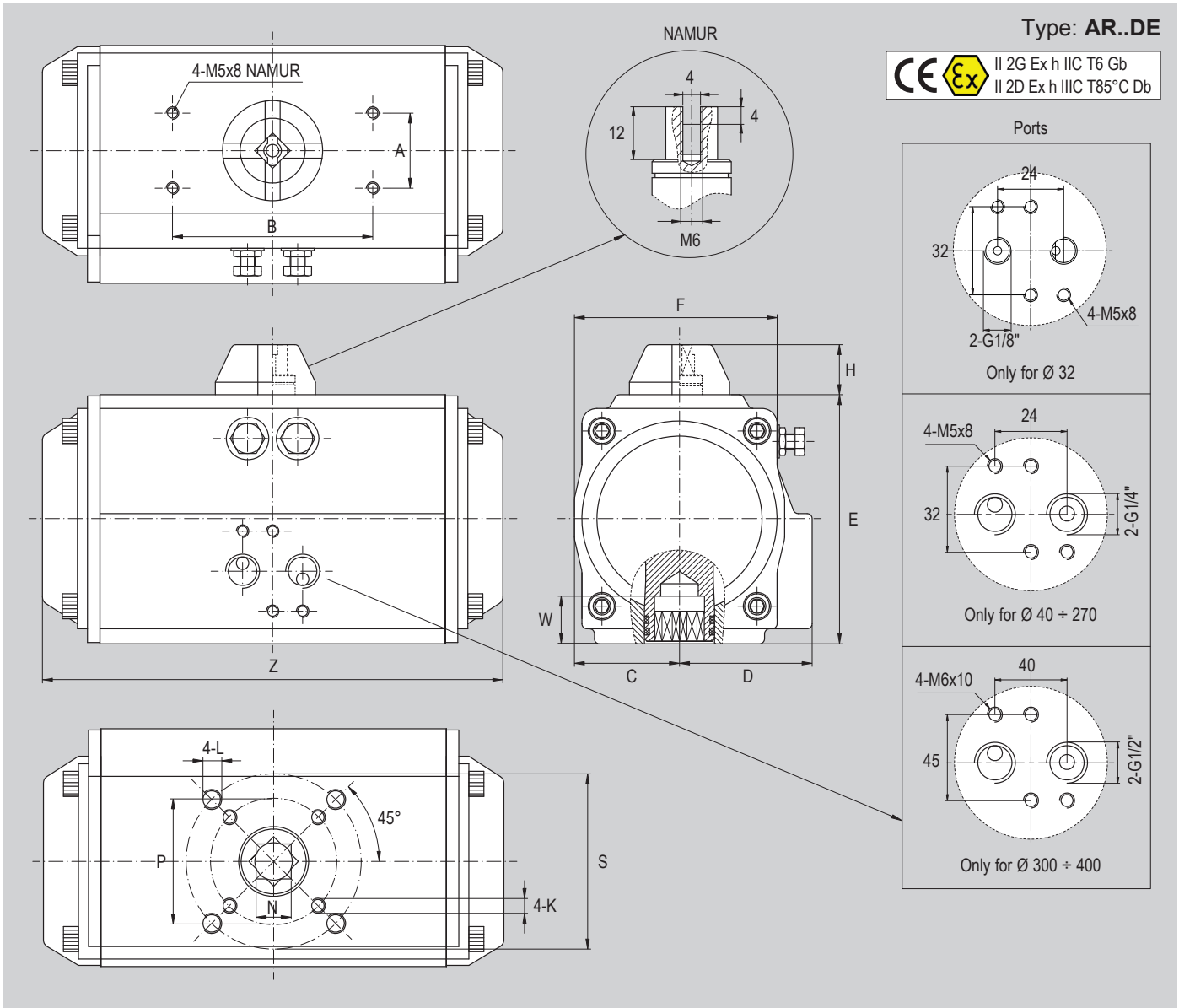

Item	Code	Size	A	B	C	D	E	F	H	ØP	ØS	K	L	N	W	Z	Connections	ISO flange
AR32DEF0309	810101	Ø 32	30	80	24.5	30.5	49	51	20	36	-	M5x8	-	9x11	-	114	G 1/8"	F03
AR40DEF03/0511	810128	Ø 40	30	80	28.5	36.5	60	65	20	36	50	M5x8	M6x9	11x14	14	120	G 1/4" NAMUR	F03 / F05
AR52DEF03/0511	810102	Ø 52	30	80	30.5	41	72	65	20	36	50	M5x8	M6x9	11x14	14	147	G 1/4" NAMUR	F03 / F05
AR63DEF05/0714	810106	Ø 63	30	80	36	47	88	72	20	50	70	M6x10	M8x13	14x18	18	165	G 1/4" NAMUR	F05 / F07
AR75DEF05/0714	810108	Ø 75	30	80	42	53	99.5	81	20	50	70	M6x10	M8x13	14x18	18	182	G 1/4" NAMUR	F05 / F07
AR83DEF05/0717	810110	Ø 83	30	80	46	57	109	92	20	50	70	M6x10	M8x13	17x21	21	208	G 1/4" NAMUR	F05 / F07
AR92DEF05/0717	810112	Ø 92	30	80	50	58.5	116.5	98	20	50	70	M6x10	M8x13	17x21	21	262	G 1/4" NAMUR	F05 / F07
AR105DEF07/1022	810114	Ø 105	30	80	58	66.5	133	109.5	20	70	102	M8x13	M10x16	22x26	26	270	G 1/4" NAMUR	F07 / F10
AR115DEF07/1022	810164	Ø 115	30	80	62	72	144	119	20	70	102	M8x13	M10x16	22x26	26	298	G 1/4" NAMUR	F07 / F10
AR125DEF07/1022	810116	Ø 125	30	80	67	75	155	127.5	20	70	102	M8x13	M10x16	22x26	26	301	G 1/4" NAMUR	F07 / F10
AR130DEF10/1227	810166	Ø 130	30	80	74	74	160	130	20	102	125	M10x16	M12x19	27x31	31	367	G 1/4" NAMUR	F10 / F12
AR140DEF10/1227	810130	Ø 140	30	80	76	76	172	137.5	20	102	125	M10x16	M12x19	27x31	31	395	G 1/4" NAMUR	F10 / F12
AR160DEF10/1227	810119	Ø 160	30	80	87	87	197	158	20	102	125	M10x16	M12x19	27x31	31	454	G 1/4" NAMUR	F10 / F12
AR190DEF1436	810143	Ø 190	30	130	103	103	230	189	30	-	140	-	M16x24	36x40	50	528	G 1/4" NAMUR	F14
AR210DEF1436	810144	Ø 210	30	130	113	113	255	211	30	-	140	-	M16x24	36x40	50	536	G 1/4" NAMUR	F14
AR240DEF1646	810145	Ø 240	30	130	130	130	289	245	30	-	165	-	M20x25	46x50	60	608	G 1/4" NAMUR	F16
AR270DEF1646	810146	Ø 270	30	130	147	147	328	273	30	-	165	-	M20x25	46x50	60	721	G 1/4" NAMUR	F16
AR300DEF1646	810155	Ø 300	30	130	203	203	348	406	30	165	215	M20x25	M20x25	46x60	63	769	G 1/2" NAMUR	F16
AR350DEF16/2546	810156	Ø 350	30	130	230	230	408	460	30	165	254	M20x25	M16x24*	46x60	63	909	G 1/2" NAMUR	F16 / F25
AR400DEF16/2555	810157	Ø 400	30	130	258	258	480	516	30	165	254	M20x25	M16x24*	55x60	73	925	G 1/2" NAMUR	F16 / F25

* 8 holes

Solenoid operated valves Namur* 1/4"



Code	Item	Matching
034059	A1NE230	AR..SE
034060	A1NE232	
034057	A1NE250	AR..DE
034058	A1NE251	
034174	A1NE270	
034179	A1NE271	
034254	A1NE272	

*For ATEX solenoid operated NAMUR valves, see from page 2.320.1

Air operated valves Namur* 1/4"



Code	Item	Matching
034238	A1NP230	AR..SE
034239	A1NP232	
034108	A1NP250	AR..DE
034240	A1NP251	
034251	A1NP270	
034252	A1NP271	
034253	A1NP272	

*For ATEX air operated NAMUR valves, see from page 2.320.1

Plate for valves* PSN..



Code	Item	Matching (valve function)
034203	PSN3/2	3/2
034166	PSN5/2	5/2

* Required for direct mounting to the component in presence of valve with coil thicker than the valve body.

22 mm directly operated solenoid valves A1E2..MD



For actuator Ø mm	Code	Item	Actuator matching
52 ÷ 270	034227	A1E230MD	AR..SE

Speed regulators for rotary actuators and valves, APNR..



Code	Item	Actuator matching	Valve matching
810153	APNRSR	AR..SE	3/2
810152	APNRDA	AR..DE	5/2 5/3

Thecnopolymer limit switch box SB700



Code	Item	Compliance	Class protection
811200	SB700M052	-	IP65

Aluminium limit switch box SB200



Code	Item	Compliance	Class protection
811188	SB200M012	-	IP67
811189	SB200M022		
811190	SB200P112		
811191	SB200P122		
811192	SB200P132		
811193	SB200Q512		

Aluminium limit switch box SB200/Exia



Code	Item	Compliance	Class protection
810072	SB200M022/Exia	II 1G	IP67
810073	SB200P132/Exia		
810074	SB200P132/NJ2/Exia		
810075	SB200P142/Exia		
810076	SB200Q512/Exia		

Aluminium limit switch box SB500



Code	Item	Compliance	Class protection
811194	SB500M012	II 2G	IP66
811195	SB500M022		
811196	SB500P112		
811197	SB500P122		
811198	SB500P132		
811218	SB500P142		
811199	SB500Q512		

Aluminium handwheel declutchable gearbox GBD..



Code	Item	Size	Actuator matching
811168	GDB050	Ø 50	Ø 32 ÷ Ø 75
811169	GDB070	Ø 70	Ø 83 ÷ Ø 92
811170	GDB102	Ø 102	Ø 105 ÷ Ø 125
811171	GDB140	Ø 140	Ø 140 ÷ Ø 160
811173	GDB165	Ø 165	Ø 190 ÷ Ø 210
811174	GDB254	Ø 254	Ø 240 ÷ Ø 400

BALL VALVES

with rotary actuators



Find out our
key products

- **Solution for most applications**
- **Easy and intuitive choice**
- **Excellent value for money**
- **Wide availability**
- **Fast delivery**

Features and certifications

Ball valves with rotary actuator single or double acting, with double rack.
The coupling between actuator and valve could be direct, thanks to the holes according to ISO 5211-DIN 3337 standard in the bottom of the actuator, or through adapters.
The upper side of the actuator is according VDI/VDE 3845 NAMUR standards and allow mounting accessories such as CAM and position sensors. Side connections are threaded and for NAMUR valves (see from page 2.44.1 and from page 2.50.1).
Supplied as standard in compliance to Reach and RoHS directives, SIL certified and conforming to ATEX 2014/34/EU Directive.

Series VSO..SE

from page 2.411.10



Series of brass full bore valves with aluminium single acting double rack rotary actuator. Ball valves available in size from 1/2" to 2".

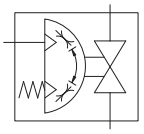

Series VSO..DE

from page 2.411.30



Series of brass full bore valves with aluminium double acting double rack rotary actuator. Ball valves available in size from 1/2" to 2".

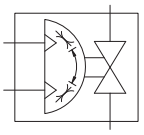

Series VSI..SE

from page 2.412.10



Series of Stainless Steel full bore valves with aluminium single acting double rack rotary actuator. Ball valves available in size from 3/8" to 2".

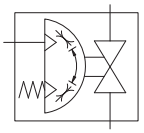

Series VSI..DE

from page 2.412.30



Series of Stainless Steel full bore valves with aluminium double acting double rack rotary actuator . Ball valves available in size from 3/8" to 2".

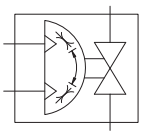

Code key

Series	Valve size	Actuator function (2)
VSO	**2034**	**DE**

- VSO = Brass ball valve
- VSI = Stainless Steel ball valve

- 2038 (1) = 3/8"
- 2012 = 1/2"
- 2034 = 3/4"
- 2100 = 1"
- 2114 = 1 1/4"
- 2112 = 1 1/2"
- 2200 = 2"

- SE = Single acting
- DE = Double acting

ATEX note

Actuators supplied according to 2014/34/EU ATEX Directive as standard

II 2G Ex h IIC T6 Gb
II 2D Ex h IIIC T85°C Db

For further information on the ATEX 2014/34/EU Directive, on classifications and protections, see from page III.1

How to order

Series	Valve Size	Actuator function
VSO	**2034**	**DE**

Notes

Options in the same grid are alternative to each others.

For ball valves standard materials, see the tables in the products data sheet, while for actuators standard materials see page 2.400.4.

(1) Size available only for series VSI

(2) It is only possible to choose the function of the actuator, which will be supplied with the appropriate bore for the selected valve size. For combinations of valve size and actuator bore, see the table below.

Actuator/Valve matching

Actuator		VSO valve						VSI valve						
Function	Size	1/2"	3/4"	1"	1 1/4"	1 1/2"	2"	3/8"	1/2"	3/4"	1"	1 1/4"	1 1/2"	2"
..SE	Ø 52	●	●	●	●	-	-	●	●	-	-	-	-	-
	Ø 63	-	-	-	-	●	●	-	-	●	●	●	-	-
	Ø 75	-	-	-	-	-	-	-	-	-	-	-	●	-
	Ø 83	-	-	-	-	-	-	-	-	-	-	-	-	●
..DE	Ø 32	●	●	-	-	-	-	●	-	-	-	-	-	-
	Ø 40	-	-	●	●	-	-	-	●	-	-	-	-	-
	Ø 52	-	-	-	-	●	●	-	-	●	●	-	-	-
	Ø 63	-	-	-	-	-	-	-	-	-	-	●	●	●

Key

● allowed matching; - not allowed matching

Accessories

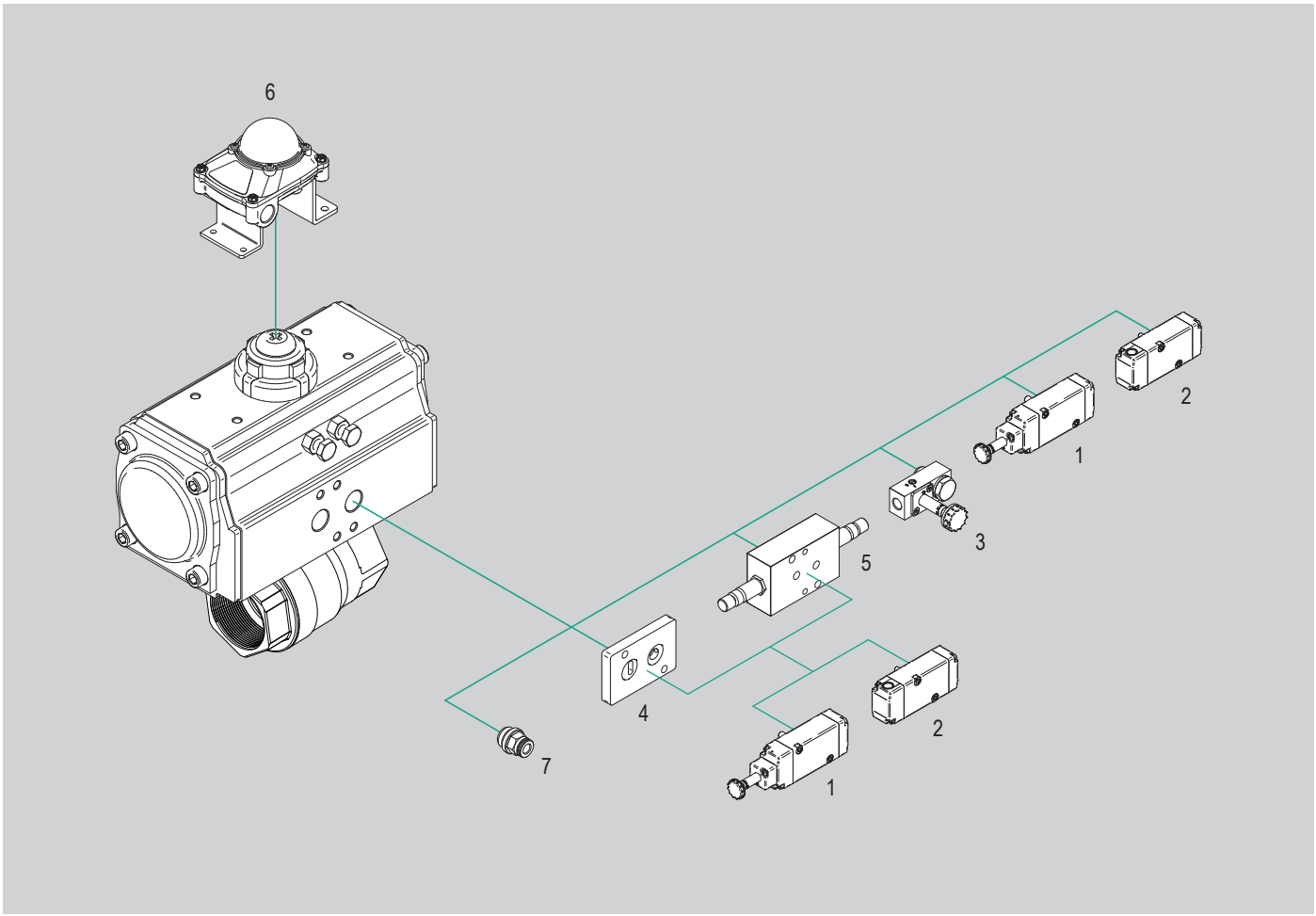

N.	Actuator bore	Item	Description	Compliance	Matching				Code key page	Data sheet page
					VSO..SE	VSO..DE	VSI..SE	VSI..DE		
1	Ø 52 ÷ 83	A1NE..	Solenoid valves NAMUR 1/4" 3/2	NAMUR	●	-	●	-	2.415.1	2.44.1
	Ø 32 ÷ 63		Solenoid valves NAMUR 1/4" 5/2 - 5/3		-	●	-	●		
	Ø 52 ÷ 83	A1NE..X..	Solenoid valves NAMUR 1/4" 3/2 ATEX	NAMUR 2014/34/EU ATEX	●	-	●	-		2.320.1
	Ø 32 ÷ 63		Solenoid valves NAMUR 1/4" 5/2 - 5/3 ATEX		-	●	-	●		
2	Ø 52 ÷ 83	A1NP..	Valves NAMUR 1/4" 3/2	NAMUR	●	-	●	-		2.50.1
	Ø 32 ÷ 63		Valves NAMUR 1/4" 5/2 - 5/3		-	●	-	●		
	Ø 52 ÷ 83	A1NP..X..	Valves NAMUR 1/4" 3/2 ATEX	NAMUR 2014/34/EU ATEX	●	-	●	-		2.320.1
	Ø 32 ÷ 63		Valves NAMUR 1/4" 5/2 - 5/3 ATEX		-	●	-	●		
3	Ø 52 ÷ 83	A1E2..MD	22 mm directly operated solenoid valves	-	●	-	●	-		2.10.1
4	Ø 32 ÷ 63	PNF..	Mounting plate*	NAMUR	●	●	●	●		2.430.50
5	Ø 52 ÷ 83	APNRSR	Speed regulator for actuators	NAMUR	●	-	●	-		2.430.1
	Ø 32 ÷ 63	APNRDA		NAMUR	-	●	-	●		
6	Ø 32 ÷ 83	SB200..	Aluminium limit switch box	-	●	●	●	●		2.426.20
		SB200/Exia..		2014/34/EU ATEX	●	●	●	●		2.426.25
		SB500..		2014/34/EU ATEX	●	●	●	●		2.426.50
		SB700..	Technopolymer limit switch box	-	●	●	●	●		2.426.90
7	Ø 32 ÷ 83	R..	Push-in fittings	UNI ISO 228/1 UNI ISO7/1 ISO R/232	●	●	●	●	4.2.1	

Key
● matching accessory; - not matching accessory

Ball valves with rotary actuator

Brass ball valve with single acting aluminium rotary actuator

Main features

Size	Code	Item	Symbol
1/2”	811011	VSO2012SE	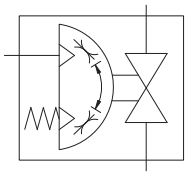
3/4”	811012	VSO2034SE	
1”	811013	VSO2100SE	
1 1/4”	811014	VSO2114SE	
1 1/2”	811015	VSO2112SE	
2”	811016	VSO2200SE	



Technical data (1)

Series	VSO..SE					
Code	811011	811012	811013	811014	811015	811016
Item	VSO2012SE	VSO2034SE	VSO2100SE	VSO2114SE	VSO2112SE	VSO2200SE
Valve size	1/2"	3/4”	1”	1 1/4”	1 1/2”	2”
Actuator type	Single acting					
Actuator bore	Ø 52				Ø 63	
Fluid	Compressed air, water, inert gases and non-aggressive fluids					
Pressure range	40 bar					
Temperature range	-20°C ÷ +130°C					
Orifice	15 mm	20 mm	25 mm	32 mm	40 mm	50 mm
Flow	11.500 l/min.	21.000 l/min.	33.000 l/min.	50.000 l/min.	84.000l/min.	97.000 l/min.
Mounting	In line					

(1) For technical data of the actuator see from page 2.401.1

Materials (2)

Description	Material
Body	Nickel-plated brass
Ball	Chrome-plated brass
Seals	PTFE - FKM

(2) For materials of the actuator see page 2.400.3

Standard dimensions

II 2G Ex h IIC T6 Gb
II 2D Ex h IIIC T85°C Db

Type: **VSO..SE**

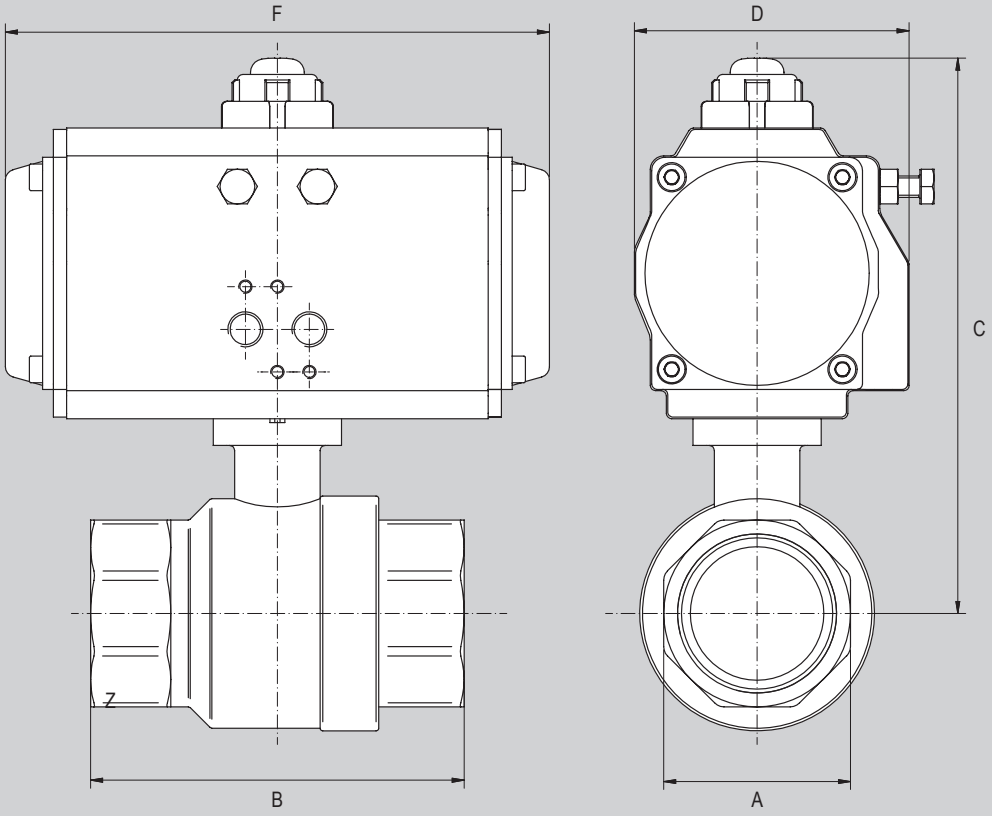

Item	Code	Valve size	Actuator type*	Actuator bore*	A	B	C	D	F
VSO2012SE	811011	1/2"	Single acting	Ø 52	26	75	130	71.5	147
VSO2034SE	811012	3/4"	Single acting	Ø 52	32	80	132.5	71.5	147
VSO2100SE	811013	1"	Single acting	Ø 52	41	90	136	71.5	147
VSO2114SE	811014	1 1/4"	Single acting	Ø 52	50	110	146.5	71.5	147
VSO2112SE	811015	1 1/2"	Single acting	Ø 63	55	120	169	83	165
VSO2200SE	811016	2"	Single acting	Ø 63	70	140	181	83	165

* For further informations of the actuator overall dimensions see page 2.401.6

Ball valves with rotary actuator

Brass ball valve with double acting aluminium rotary actuator

Main features

Size	Code	Item	Symbol
1/2”	811001	VSO2012DE	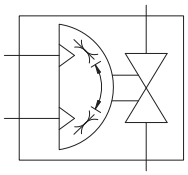
3/4”	811002	VSO2034DE	
1”	811003	VSO2100DE	
1 1/4”	811004	VSO2114DE	
1 1/2”	811005	VSO2112DE	
2”	811006	VSO2200DE	



Technical data (1)

Series	VSO..DE					
Code	811001	811002	811003	811004	811005	811006
Item	VSO2012DE	VSO2034DE	VSO2100DE	VSO2114DE	VSO2112DE	VSO2200DE
Valve size	1/2"	3/4”	1”	1 1/4”	1 1/2”	2”
Actuator type	Double acting					
Actuator bore	Ø 32		Ø 40		Ø 52	
Fluid	Compressed air, water, inert gases and non-aggressive fluids					
Pressure range	40 bar					
Temperature range	-20°C ÷ +130°C					
Orifice	15 mm	20 mm	25 mm	32 mm	40 mm	50 mm
Flow	11.500 l/min.	21.000 l/min.	33.000 l/min.	50.000 l/min.	84.000l/min.	97.000 l/min.
Mounting	In line					

(1) For technical data of the actuator see from page 2.403.1

Materials (2)

Description	Material
Body	Nickel-plated brass
Ball	Chrome-plated brass
Seals	PTFE - FKM

(2) For materials of the actuator see page 2.400.3

Standard dimensions

II 2G Ex h IIC T6 Gb
II 2D Ex h IIIC T85°C Db

Type: **VSO..DE**

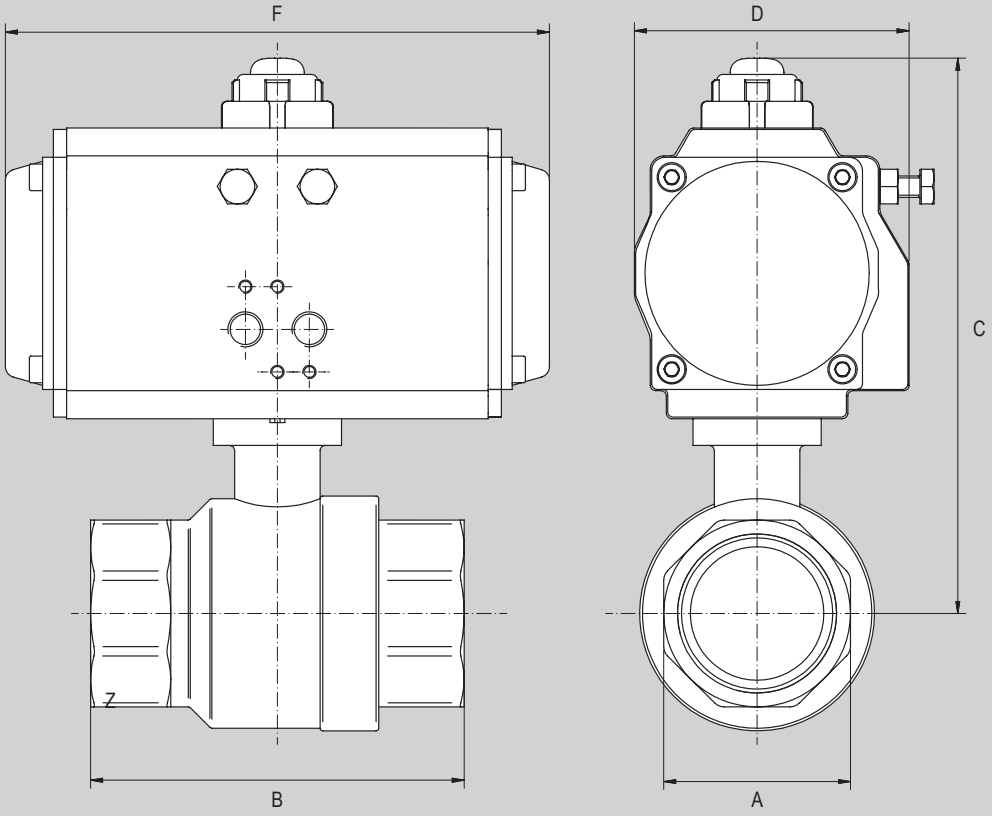

Item	Code	Valve size	Actuator type*	Actuator bore*	A	B	C	D	F
VSO2012DE	811001	1/2"	Double acting	Ø 32	26	75	103	55	114
VSO2034DE	811002	3/4"	Double acting	Ø 32	32	80	105.5	55	114
VSO2100DE	811003	1"	Double acting	Ø 40	41	90	124	65	120
VSO2114DE	811004	1 1/4"	Double acting	Ø 40	50	110	135	65	120
VSO2112DE	811005	1 1/2"	Double acting	Ø 52	55	120	153.5	71.5	147
VSO2200DE	811006	2"	Double acting	Ø 53	70	140	165	71.5	147

* For further informations of the actuator overall dimensions see page 2.403.4

Ball valves with rotary actuator

Stainless Steel ball valve with single acting aluminium rotary actuator

Main features

Size	Code	Item	Symbol
3/8"	811031	VSI2038SE	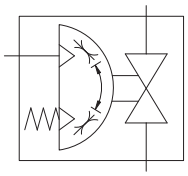
1/2”	811032	VSI2012SE	
3/4”	811033	VSI2034SE	
1”	811034	VSI2100SE	
1 1/4”	811035	VSI2114SE	
1 1/2”	811036	VSI2112SE	
2”	811037	VSI2200SE	



Technical data (1)

Series	VSI..SE						
Code	811031	811032	811033	811034	811035	811036	811037
Item	VSI2038SE	VSI2012SE	VSI2034SE	VSI2100SE	VSI2114SE	VSI2112SE	VSI2200SE
Valve size	3/8"	1/2"	3/4”	1”	1 1/4”	1 1/2”	2”
Actuator type	Single acting						
Actuator bore	Ø 52		Ø 63			Ø 75	Ø 83
Fluid	Compressed air, water, inert gases and non-aggressive fluids						
Pressure range	63 bar						
Temperature range	-20°C ÷ +150°C						
Orifice	10 mm	15 mm	20 mm	25 mm	32 mm	40 mm	50 mm
Flow	3.000 l/min.	11.500 l/min.	21.000 l/min.	33.000 l/min.	50.000 l/min.	84.000l/min.	97.000 l/min.
Mounting	In line						

(1) For technical data of the actuator see from page 2.401.1

Materials (2)

Description	Material
Body	Stainless Steel AISI 316
Ball	Stainless Steel AISI 316
Seals	PTFE - FKM

(2) For materials of the actuator see page 2.400.3

Standard dimensions

II 2G Ex h IIC T6 Gb
II 2D Ex h IIIC T85°C Db

Type: **VSI..SE**

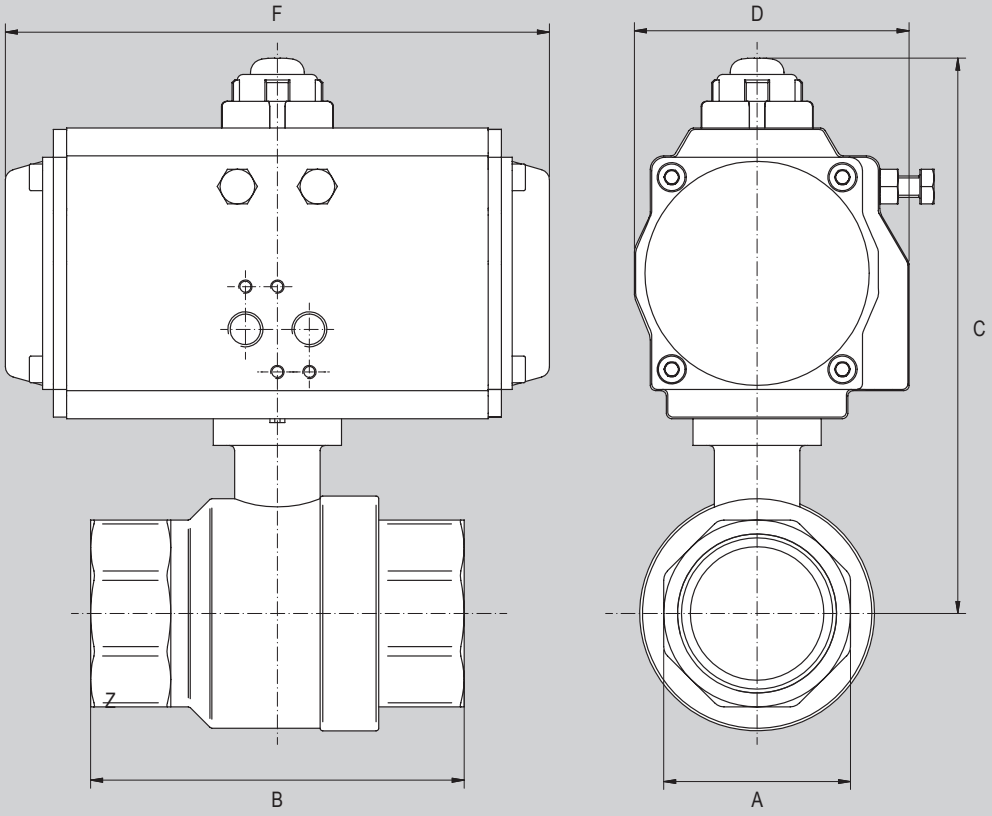

Item	Code	Valve size	Actuator type*	Actuator bore*	A	B	C	D	F
VSI2038SE	811031	3/8"	Single acting	Ø 52	27	65	132	71.5	147
VSI2012SE	811032	1/2"	Single acting	Ø 52	27	75	132	71.5	147
VSI2034SE	811033	3/4"	Single acting	Ø 63	33	80	152	83	165
VSI2100SE	811034	1"	Single acting	Ø 63	41	90	160	83	165
VSI2114SE	811035	1 1/4"	Single acting	Ø 63	50	110	166	83	165
VSI2112SE	811036	1 1/2"	Single acting	Ø 75	58	120	188	95	182
VSI2200SE	811037	2"	Single acting	Ø 83	70	140	206	103	208

* For further informations of the actuator overall dimensions see page 2.401.6

Ball valves with rotary actuator

Stainless Steel ball valve with double acting aluminium rotary actuator

Main features

Size	Code	Item	Symbol
3/8”	811021	VSI2038DE	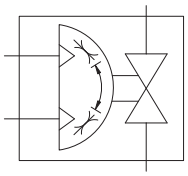
1/2”	811022	VSI2012DE	
3/4”	811023	VSI2034DE	
1”	811024	VSI2100DE	
1 1/4”	811025	VSI2114DE	
1 1/2”	811026	VSI2112DE	
2”	811027	VSI2200DE	



Technical data (1)

Series	VSI..DE						
Code	811021	811022	811023	811024	811025	811026	811027
Item	VSI2038DE	VSI2012DE	VSI2034DE	VSI2100DE	VSI2114DE	VSI2112DE	VSI2200DE
Valve size	3/8"	1/2"	3/4”	1”	1 1/4”	1 1/2”	2”
Actuator type	Double acting						
Actuator bore	Ø 32	Ø 40	Ø 52		Ø 63		
Fluid	Compressed air, water, inert gases and non-aggressive fluids						
Pressure range	63 bar						
Temperature range	-20°C ÷ +150°C						
Orifice	10 mm	15 mm	20 mm	25 mm	32 mm	40 mm	50 mm
Flow	3.000 l/min.	11.500 l/min.	21.000 l/min.	33.000 l/min.	50.000 l/min.	84.000l/min.	97.000 l/min.
Mounting	In line						

(1) For technical data of the actuator see from page 2.403.1

Materials (2)

Description	Material
Body	Stainless Steel AISI 316
Ball	Stainless Steel AISI 316
Seals	PTFE - FKM

(2) For materials of the actuator see page 2.400.3

Standard dimensions

II 2G Ex h IIC T6 Gb
II 2D Ex h IIIC T85°C Db

Type: **VSI..DE**

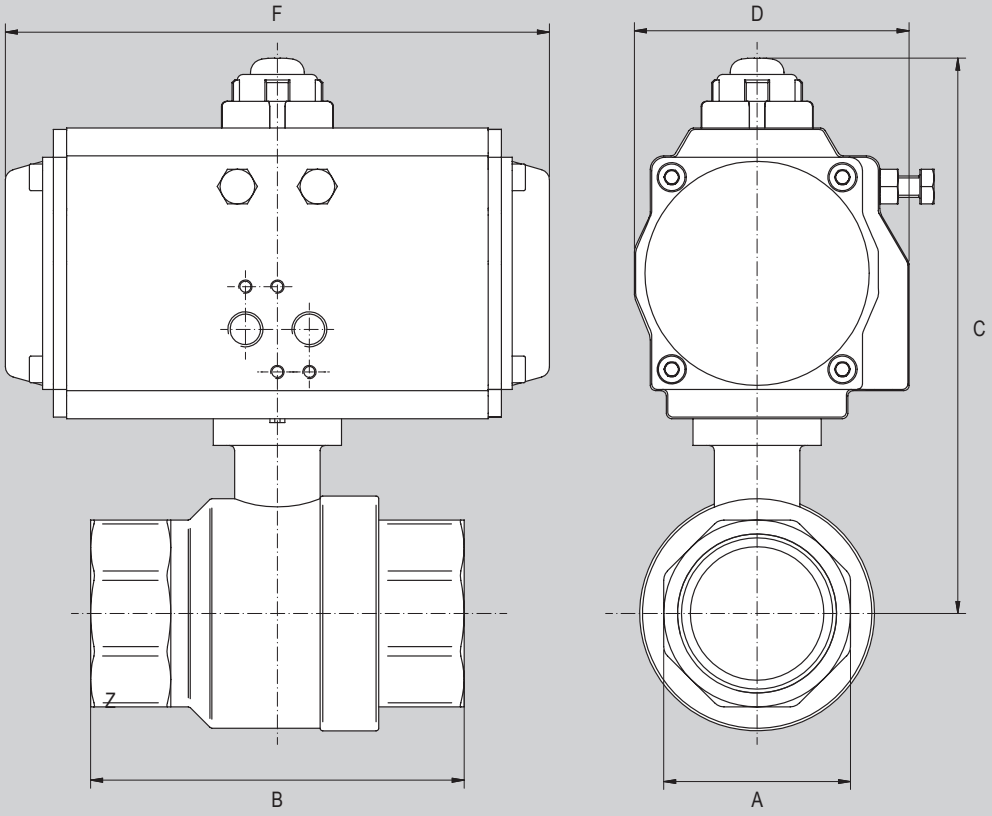

Item	Code	Valve size	Actuator type*	Actuator bore*	A	B	C	D	F
VSI2038DE	811021	3/8”	Double acting	Ø 32	27	65	105	55	114
VSI2012DE	811022	1/2”	Double acting	Ø 40	27	75	116	63	120
VSI2034DE	811023	3/4”	Double acting	Ø 52	33	80	132	71.5	147
VSI2100DE	811024	1”	Double acting	Ø 52	41	90	144	71.5	147
VSI2114DE	811025	1 1/4”	Double acting	Ø 63	50	110	166	83	165
VSI2112DE	811026	1 1/2”	Double acting	Ø 63	58	120	176	83	165
VSI2200DE	811027	2"	Double acting	Ø 63	70	140	185	83	165

* For further informations of the actuator overall dimensions see page 2.403.4

Solenoid operated valves Namur* 1/4"



Code	Item	Matching
034059	A1NE230	VSO..SE VSI..SE
034060	A1NE232	
034057	A1NE250	VSO..DE VSI..DE
034058	A1NE251	
034174	A1NE270	
034179	A1NE271	
034254	A1NE272	

*For ATEX solenoid operated NAMUR valves, see from page 2.320.1

Air operated valves Namur* 1/4"



Code	Item	Matching
034238	A1NP230	VSO..SE VSI..SE
034239	A1NP232	
034108	A1NP250	VSO..DE VSI..DE
034240	A1NP251	
034251	A1NP270	
034252	A1NP271	
034253	A1NP272	

*For ATEX solenoid operated NAMUR valves, see from page 2.320.1

Plate for valves* PSN..



Code	Item	Matching (valve function)
034203	PSN3/2	3/2
034166	PSN5/2	5/2

* Required for direct mounting to the component in presence of valve with coil thicker than the valve body.

22 mm directly operated solenoid valves A1E2..MD



For actuator Ø mm	Code	Item	Actuator matching
52 ÷ 83	034227	A1E230MD	VSO..SE VSI..SE

Speed regulators for rotary actuators and valves, APNR..



Code	Item	Actuator matching	Valve matching
810153	APNRSR	VSO..SE VSI..SE	3/2
810152	APNRDA	VSO..DE VSI..DE	5/2 5/3

Thecnopolymer limit switch box SB700



Code	Item	Compliance	Class protection
811200	SB700M052	-	IP65

Aluminium limit switch box SB200



Code	Item	Compliance	Class protection
811188	SB200M012	-	IP67
811189	SB200M022		
811190	SB200P112		
811191	SB200P122		
811192	SB200P132		
811193	SB200Q512		

Aluminium limit switch box SB200/Exia



Code	Item	Compliance	Class protection
810072	SB200M022/Exia	II 1G	IP67
810073	SB200P132/Exia		
810074	SB200P132/NJ2/Exia		
810075	SB200P142/Exia		
810076	SB200Q512/Exia		

Aluminium limit switch box SB500



Code	Item	Compliance	Class protection
811194	SB500M012	II 2G	IP66
811195	SB500M022		
811196	SB500P112		
811197	SB500P122		
811198	SB500P132		
811218	SB500P142		
811199	SB500Q512		

Notes

ACCESSORIES
for rotary actuators



Find out our
key products

- **Solution for most applications**
- **Easy and intuitive choice**
- **Excellent value for money**
- **Wide availability**
- **Fast delivery**

Features and certifications

Accessories for single and double acting rotary actuators: limit switch box and handwheel gearbox.
Limit switch box available in four series: three in aluminium (SB200 - SB200/Exia - SB500) and one in technopolymer (SB700). Every series is available with different limit switch types inside, and they are compatible with the actuators thanks to the universal adjustable brackets with holes according to ISO 5211-DIN 3337 standard. Supplied as standard in compliance to Reach and RoHS directives, and SIL certified, series SB200/Exia and series SB500 are furthermore conforming to ATEX 2014/34/EU.
Aluminium declutchable handwheel gearbox, compatible to pneumatic rotary actuators, are available in different size and supplied as standard in compliance to Reach and RoHS directives.

Series SB200

from page 2.426.20



Series of aluminium limit switch box compatible with pneumatic rotary actuators. available with different limit switch types: mechanical, proximity and magnetic. On request they can be supplied conforming to 2014/34/EU ATEX Directive, in classification II 3G Ex ec / II 3D Ex tc.

Series SB200/Exia

from page 2.426.25



Series of aluminium limit switch box compatible with pneumatic rotary actuators. available with different limit switch types: mechanical, proximity and magnetic. Supplied conforming to 2014/34/EU ATEX Directive, in classification Ex ia, as standard.

Series SB500

from page 2.426.50



Series of aluminium limit switch box compatible with pneumatic rotary actuators. available with different limit switch types: mechanical, proximity and magnetic. Supplied conforming to 2014/34/EU ATEX Directive, in classification Ex db, as standard.

Series SB700

from page 2.426.90



Series of technopolymer limit switch box compatible with pneumatic rotary actuators. available with different limit switch types: mechanical and proximity.

Series GDB..

from page 2.428.1



Aluminium declutchable handwheel gearbox available in size from Ø 50 to Ø 254, compatible actuator side with pneumatic rotary actuators in bores from Ø 40 to Ø 400 (ISO flange from F05 to F25), and compatible valve side with ISO flange from F05 to F26, square from 17 mm to 60 mm.

Code key

Series [1]	Limit switch type [1]	Limit switch suffix [1]
SB500	**P**	**122**

Series [1]
SB200
SB200/Exia
SB500
SB700

Limit switch type [1]
M = Mechanical
P = Proximity
Q [1] = Magnetic

Limit switch suffix [1]
012 = Silver contacts (Honeywell)
022 = Gold contacts (Honeywell)
052 = Silver contacts (E-Switch)
112 = PNP (Pepperl+Fuchs)
122 = NPN / PNP (IFM)
132 = NAMUR NC (Pepperl+Fuchs)
132/NJ2 = NAMUR NC (Pepperl+Fuchs)
142 = NAMUR NC (IFM)
512 = SPDT (ALMS)

ATEX note

Limit switch box SB200, type M022, on request can be supplied conforming to 2014/34/EU ATEX Directive in classification:

II 3G Ex ec IIC T6 Gc
II 3D Ex tc IIIC T85°C Dc

Limit switch box SB200/Exia supplied as standard confroming to 2014/34/EU ATEX Directive in these classifications:

II 1G Ex ia IIC T6/T5 Ga
II 1D Ex ia IIIC T135°C Da

II 1G Ex ia IIB T6/T5 Ga
II 2G Ex ia IIC T6/T5 Gb
II 1D Ex ia IIIC T135°C Da

Limit switch box SB500 supplied as standard conforming to 2014/34/EU ATEX Directive in classification:

II 2G Ex db IIB T6 Gb

For further information on the ATEX 2014/34/EU Directive, on classifications and protections, see from page III.1

How to order SB200 - SB500 - SB700

Series	Limit switch type	Limit switch suffix
SB500	**P**	**122**

How to order SB200/Exia

Series	Limit switch type	Limit switch suffix	Atex
SB200	**P**	**132/NJ2**	**/Exia**

Notes

Options in the same grid are alternative to each others.

For standard materials see the table at page 2.425.4

(1) For matching between limit switch box series limit switch type and limit switch suffix, see the table below.

Matching series box/limit switch type

Limit switch box series	Limit switch type								
	Mechanical (M)			Proximity (P)					Magnetic (Q)
	012	022	052	112	122	132	132/NJ2	142	512
SB200	●	●	-	●	●	●	-	-	●
SB200/Exia	-	●	-	-	-	●	●	●	●
SB500	●	●	-	●	●	●	-	●	●
SB700	-	-	●	-	-	-	-	-	-

Key

● allowed matching; - not allowed matching

Limit switch box standard materials

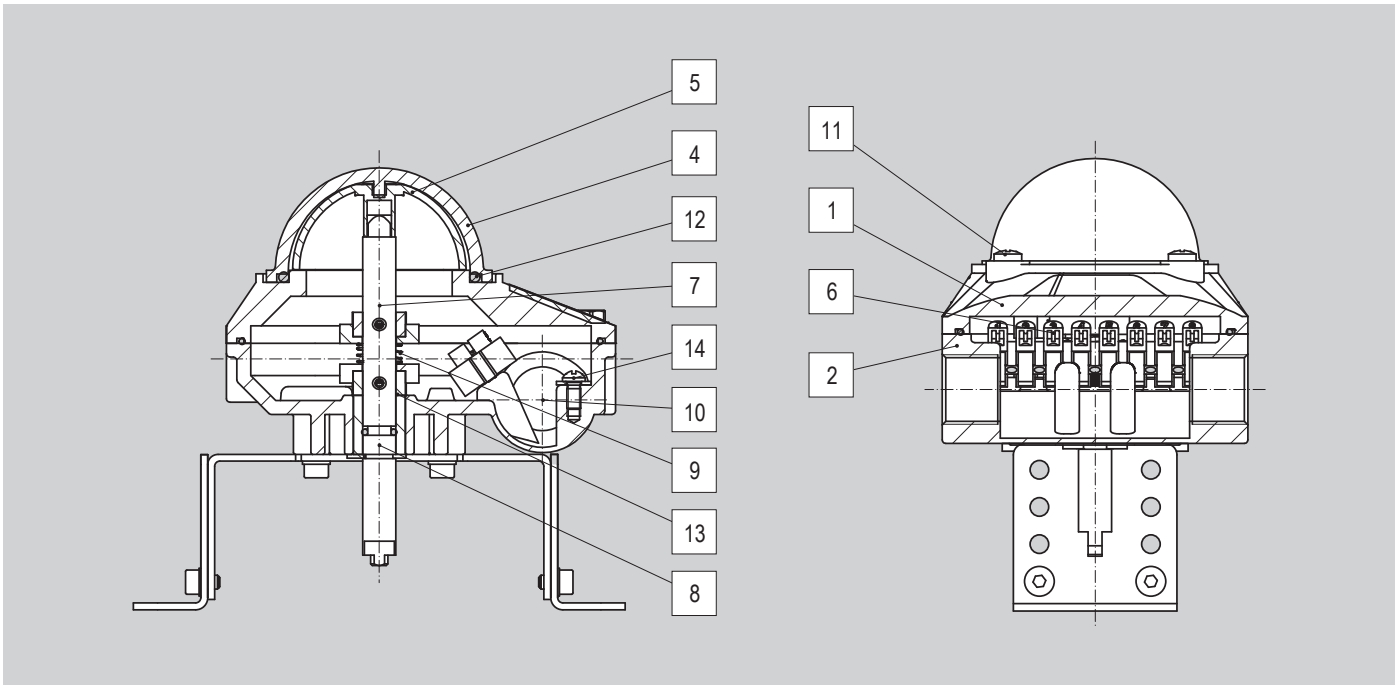

Position	Description	Material			
		SB200	SB200/Exia	SB500	SB700
1	Cover	Die-cast aluminium			Polycarbonate (PC)
2	Body	Die-cast aluminium			Polyphenylene oxide (PPO)
3	Shaft	Stainless Steel			Poliammide (PA)
4	Indicator cover	Polycarbonate (PC)			ABS
5	Indicator	ABS			
6	Terminal strip	Polycarbonate (PC), Brass, Stainless Steel			
7	Cam	Polycarbonate (PC)			
8	Plate	-			Polycarbonate (PC)
9	Cable connector	-			Nylon
10	Spring	Stainless Steel			
11	Screws	Stainless Steel			
12	Seals	NBR			
13	Bushing	Bronze			-
14	Earthing screw	Stainless Steel			-

Limit switch box wiring diagram

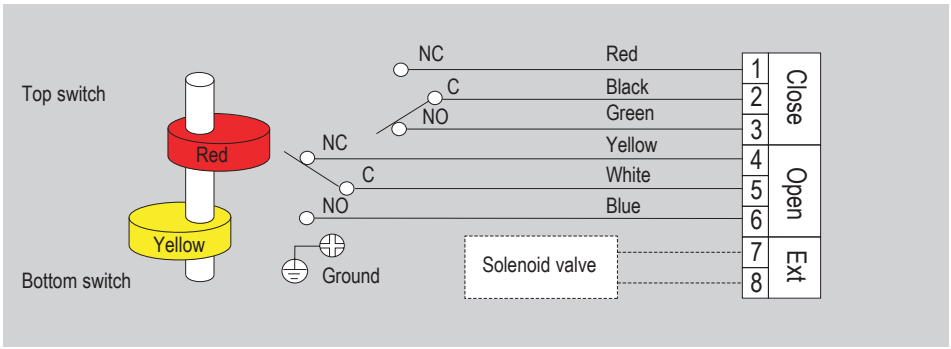

Features	
Wiring diagram number	1
Function	SPDT
Limit switch type	Mechanical

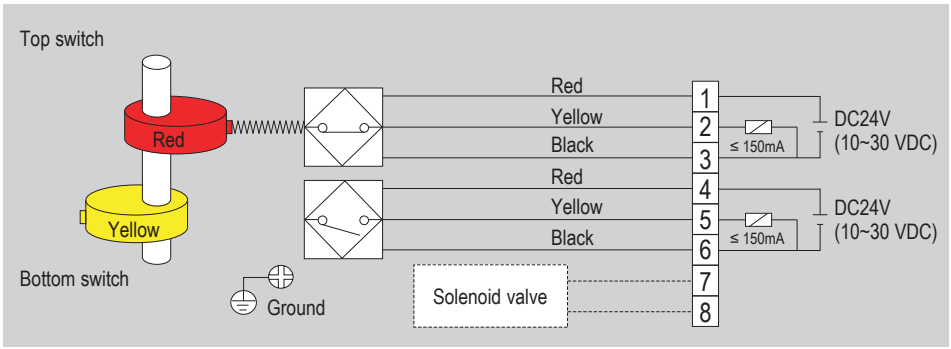

Features	
Wiring diagram number	2
Function	PNP
Limit switch type	Proximity

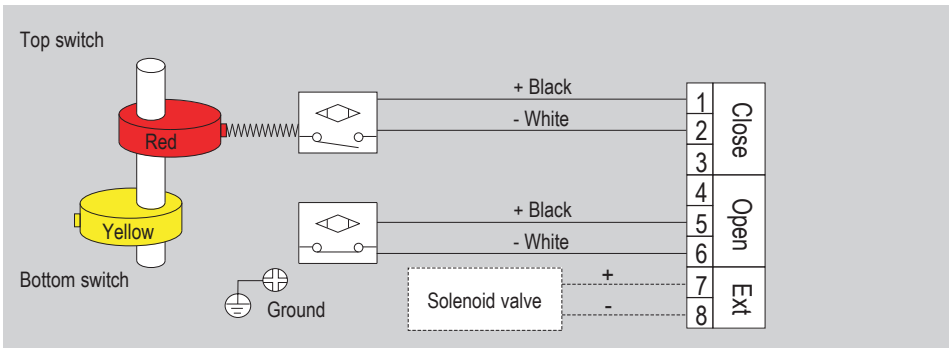

Features	
Wiring diagram number	3
Function	NPN
Limit switch type	Proximity

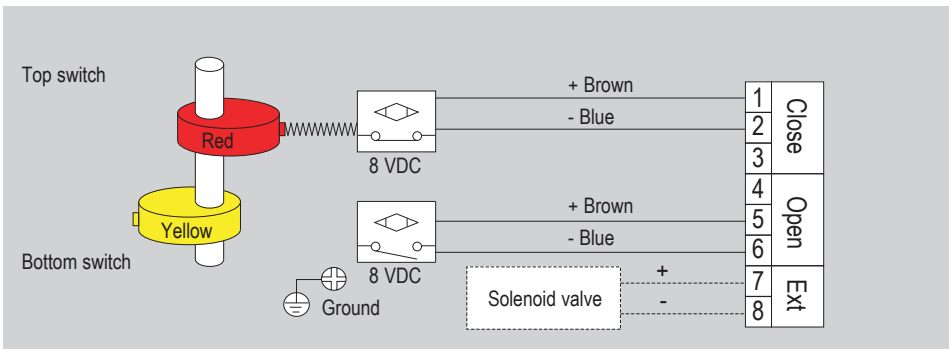

Features	
Wiring diagram number	4
Function	NAMUR NC
Limit switch type	Proximity

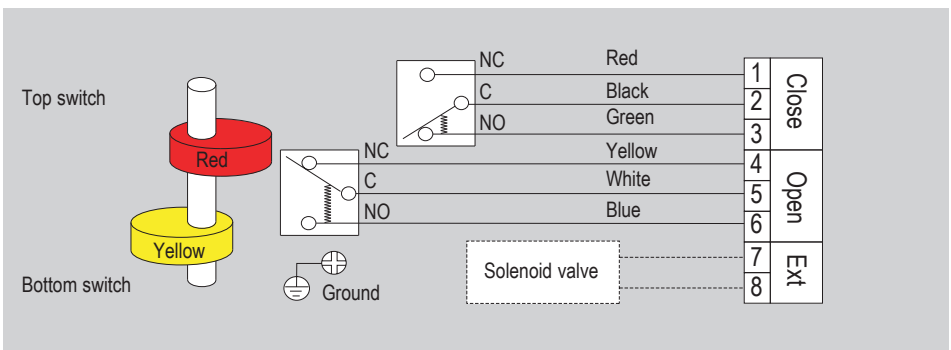

Features	
Wiring diagram number	5
Function	SPDT
Limit switch type	Magnetic

Accessories for rotary actuators
Aluminium limit switch box series SB200

Main features

Series	Limit switch (manufacturer part no.)	Code	Item
SB200	QM50G10B01	811188	SB200M012
	QM10G10B01-G	811189	SB200M022
	NBB2-V3-E2	811190	SB200P112
	IS5076	811191	SB200P122
	NCB2-V3-NO	811192	SB200P132
	ALMS-5-240	811193	SB200Q512



Technical data

Series		SB200					
Code		811188	811189	811190	811191	811192	811193
Item		SB200M012	SB200M022	SB200P112	SB200P122	SB200P132	SB200Q512
Class protection		IP 67					
Temperature range		-25°C ÷ +80°C					
Ports		M20x1.5 (x2)					
Terminal strip positions		8					
Positions indicator		0° ÷ 90°					
Indicator color	Open	Yellow					
	Close	Red					
ATEX classification*		-	II 3G Ex ec IIC T6 Gc II 3D Ex tc IIIC T85°C Dc	-			
Limit switch type		Mechanical		Proximity			Magnetic
Limit switch (manufacturer part no.)		QM50G10B01	QM10G10B01-G	NBB2-V3-E2	IS5076	NCB2-V3-N0	ALMS-5-240
Limit switch manufacturer		Honeywell		Pepprl+Fuchs	IFM	Pepperl+Fuchs	ALMS
Contacts		Silver	Gold	-			
Function		SPDT		PNP	PNP / NPN	NAMUR NC	SPDT
Wire number		3			2		3
Voltage		125 ÷ 250 VAC 48 VDC		10 ÷ 30 VDC	5 ÷ 36 VDC	8 VDC	5 ÷ 240 V AC/DC
Intensity		5 A VAC 5 A VDC	0,5 A VAC 0,1 A VDC	0 ÷ 100 mA	4 ÷ 200 mA	-	≤ 300 mA
Switching frequency		-		0 ÷ 1000 Hz	0 ÷ 2000 Hz		100 Hz
Limit switch number		2					
Wiring diagram number**		1		2	3	4	5

*Available on request. For availability please contact the sales department.
For further information on the ATEX 2014/34/EU Directive, on classifications and protections, see from page III.1

**For wiring diagram see page 2.426.3

Standard dimensions

Type: **SB200**

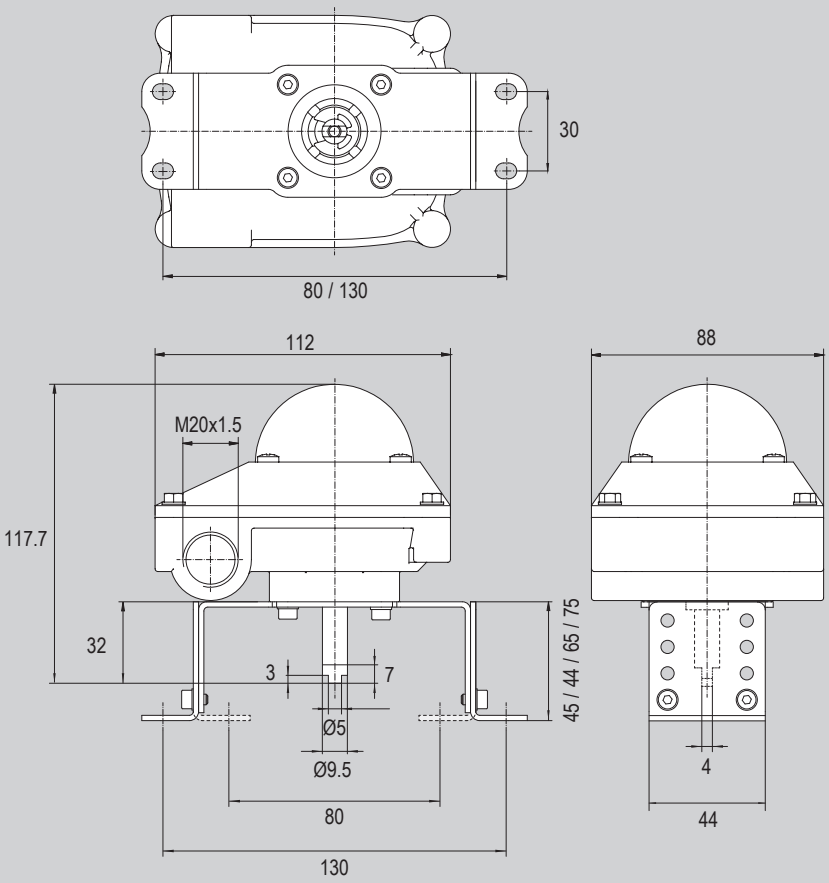

Series	Limit switch type	Limit switch manufacturer part no.	Code	Item
SB200	Mechanical	QM50G10B01	811188	SB200M012
		QM10G10B01-G	811189	SB200M022
	Proximity	NBB2-V3-E2	811190	SB200P112
		IS5076	811191	SB200P122
		NCB2-V3-N0	811192	SB200P132
	Magnetic	ALMS-5-240	811193	SB200Q512

Accessories for rotary actuators
Aluminium limit switch box series SB200/Exia

Main features

Series	Limit switch (manufacturer part no.)	Code	Item
SB200/Exia	QM10G10B01-G	810072	SB200M022/Exia
	NCB2-V3-NO	810073	SB200P132/Exia
	NJ2-V3-N	810074	SB200P132/NJ2/Exia
	NS5002	810075	SB200P142/Exia
	ALMS-5-240	810076	SB200Q512/Exia



Technical data

Series		SB200/Exia				
Code		810072	810073	810074	810075	810076
Item		SB200M022/Exia	SB200P132/Exia	SB200P132/NJ2/Exia	SB200P142/Exia	SB200Q512/Exia
Class protection		IP 67				
Temperature range		-25°C ÷ +80°C				
Ports		M20x1.5 (x2)				
Terminal strip positions		8				
Positions indicator		0° ÷ 90°				
Indicator color	Open	Yellow				
	Close	Red				
ATEX classification*		II 1G Ex ia IIC T6/T5 Ga II 1D Ex ia IIIC T135°C Da	II 1G Ex ia IIC T6/T5 Ga II 1D Ex ia IIIC T135°C Da	II 1G Ex ia IIC T6/T5 Ga II 1D Ex ia IIIC T135°C Da	II 1G Ex ia IIC T6/T5 Ga II 2G Ex ia IIC T6/T5 Gb II 1D Ex ia IIIC T135°C Da	II 1G Ex ia IIC T6/T5 Ga II 1D Ex ia IIIC T135°C Da
Limit switch type		Mechanical	Proximity			Magnetic
Limit switch (manufacturer part no.)		QM10G10B01-G	NCB2-V3-N0	NJ2-V3-N	NS5002	ALMS-5-240
Limit switch manufacturer		Honeywell	Pepprl+Fuchs	Pepprl+Fuchs	IFM	ALMS
Contacts		Gold	-			
Function		SPDT	NAMUR NC			SPDT
Wire number		3	2			3
Voltage		125 ÷ 250 VAC 48 VDC	8 VDC			5 ÷ 240 V AC/DC
Intensity		0,5 A VAC 0,1 A VDC	-		30 mA	≤ 300 mA
Switching frequency		-	0 ÷ 1000 Hz	0 ÷ 2000 Hz	800 Hz	100 Hz
Limit switch number		2				
Wiring diagram number**		1	4			5

*For further information on the ATEX 2014/34/EU Directive, on classifications and protections, see from page III.1

**For wiring diagram see page 2.426.3

Standard dimensions

II 1G Ex ia IIC T6/T5 Ga
II 1D Ex ia IIIC T135°C Da

II 1G Ex ia IIC T6/T5 Ga
II 2G Ex ia IIC T6/T5 Gb
II 1D Ex ia IIIC T135°C Da

Type: **SB200/Exia**

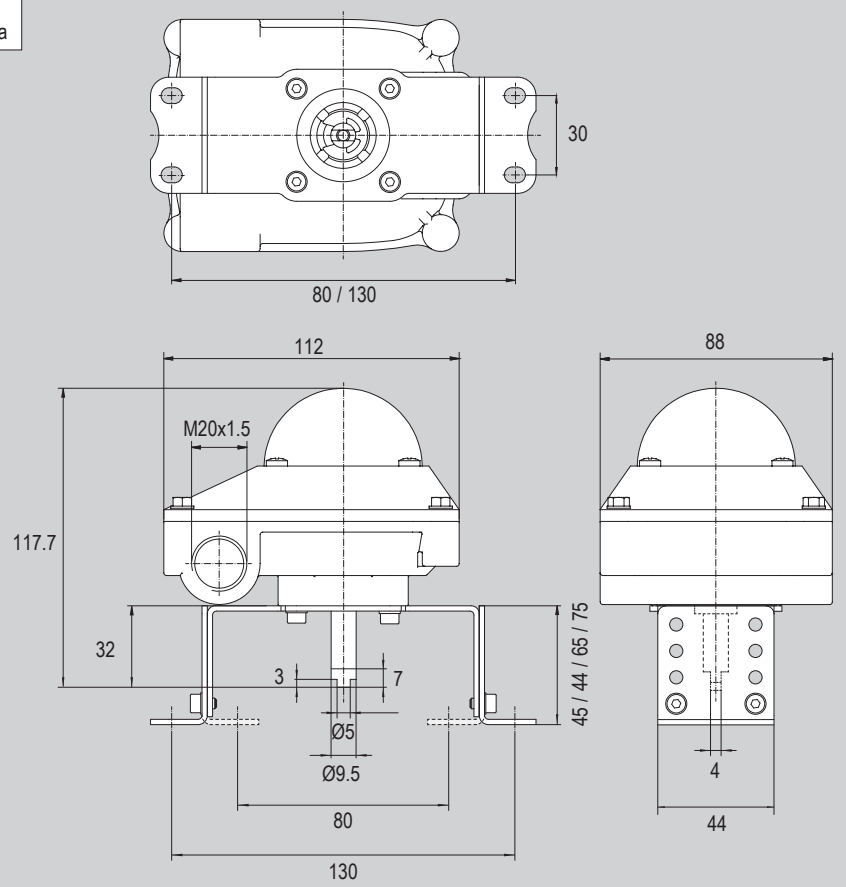

Series	Limit switch type	Limit switch manufacturer part no.	Code	Item
SB200/Exia	Mechanical	QM10G10B01-G	810072	SB200M022/Exia
	Proximity	NCB2-V3-N0	810073	SB200P132/Exia
		NJ2-V3-N	810074	SB200P132/NJ2/Exia
		NS5002	810075	SB200P142/Exia
	Magnetic	ALMS-5-240	810076	SB200Q512/Exia

Accessories for rotary actuators

Aluminium limit switch box series SB500

Main features

Series	Limit switch (manufacturer part no.)	Code	Item
SB500	V15T16SZ200A05	811194	SB500M012
	QM10G10B01-G	811195	SB500M022
	NBB2-V3-E2	811196	SB500P112
	IS5076	811197	SB500P122
	NCB2-V3-NO	811198	SB500P132
	NS5002	811218	SB500P142
	ALMS-5-240	811199	SB500Q512



Technical data

Series		SB500						
Code		811194	811195	811196	811197	811198	811218	811199
Item		SB500M012	SB500M022	SB500P112	SB500P122	SB500P132	SB500P142	SB500Q512
Class protection		IP 66						
Temperature range		-20°C ÷ +50°C						
Ports		M20x1.5 (x2)						
Terminal strip positions		8						
Positions indicator		0° ÷ 90°						
Indicator color	Open	Giallo						
	Close	Rosso						
ATEX classification*		II 2G Ex db IIB T6 Gb						
Limit switch type		Mechanical		Proximity				Magnetic
Limit switch (manufacturer part no.)		V15T16SZ200A05	QM10G10B01-G	NBB2-V3-E2	IS5076	NCB2-V3-NO	NS5002	ALMS-5-240
Limit switch manufacturer		Honeywell		Pepprl+Fuchs	IFM	Pepperl+Fuchs	IFM	ALMS
Contacts		Silver	Gold	-				
Function		SPDT		PNP	PNP / NPN	NAMUR NC		SPDT
Wire number		3			2			3
Voltage		250 VAC	125 ÷ 250 VAC 48 VDC	10 ÷ 30 VDC	5 ÷ 36 VDC	8 VDC		5 ÷ 240 V AC/DC
Intensity		16 (4) A	0,5 A VAC 0,1 A VDC	0 ÷ 100 mA	4 ÷ 200 mA	-	30 mA	≤ 300 mA
Switching frequency		-		0 ÷ 1000 Hz	0 ÷ 2000 Hz		800 Hz	100 Hz
Limit switch number		2						
Wiring diagram number**		1		2	3	4		5

*For further information on the ATEX 2014/34/EU Directive, on classifications and protections, see from page III.1

**For wiring diagram see page 2.426.3

Standard dimensions

II 2G Ex db IIB T6 Gb

Type: **SB500**

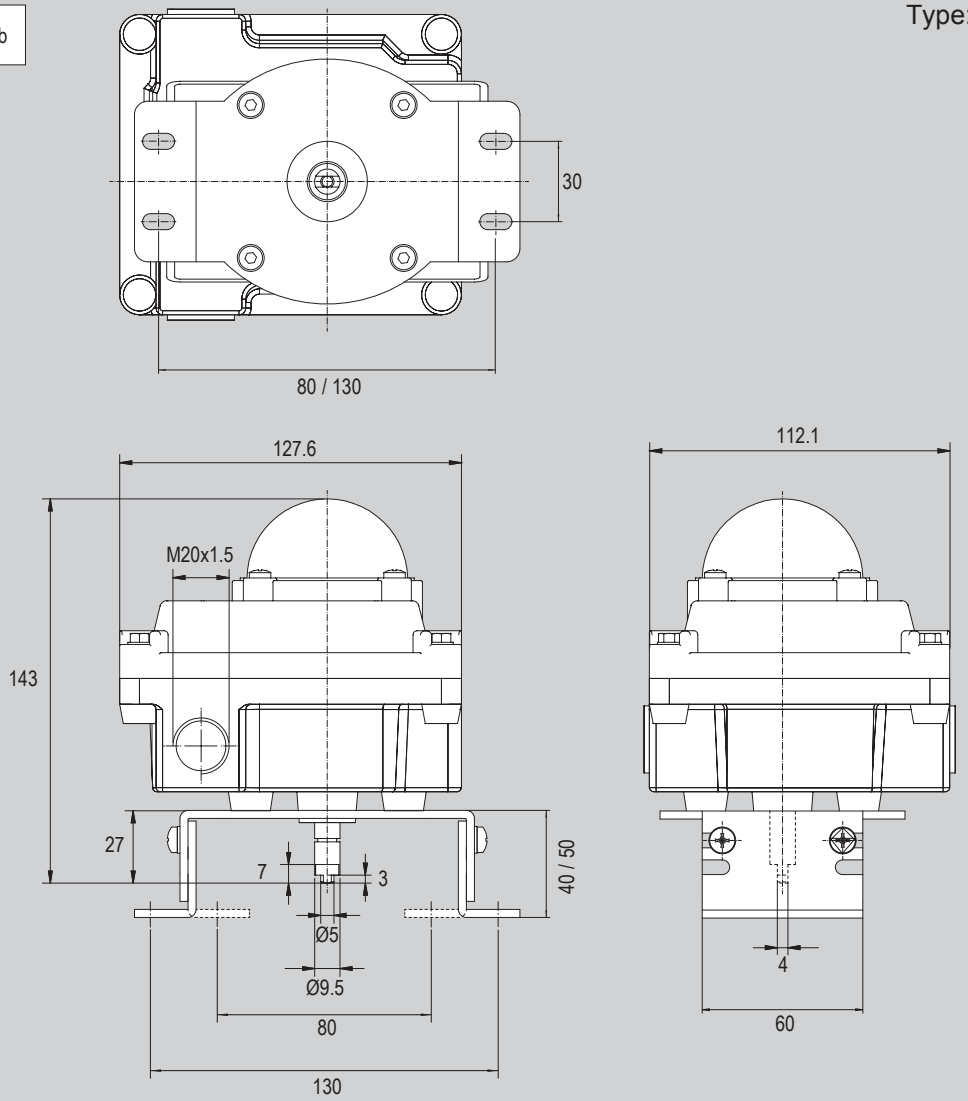

Series	Limit switch type	Limit switch manufacturer part no.	Code	Item
SB500	Mechanical	V15T16SZ200A05	811194	SB500M012
		QM10G10B01-G	811195	SB500M022
	Proximity	NBB2-V3-E2	811196	SB500P112
		IS5076	811197	SB500P122
		NCB2-V3-NO	811198	SB500P132
	Magnetic	ALMS-5-240	811199	SB500Q512

Accessories for rotary actuators
Technopolymer limit switch box series SB700

Main features

Series	Limit switch (manufacturer part no.)	Code	Item
SB700	LS SILVER	811200	SB700M012



Technical data

Series		SB700
Code		811200
Item		SB700M052
Class protection		IP 65
Temperature range		-15°C ÷ +80°C
Ports		1/2" G (x2)
Terminal strip positions		10
Positions indicator		0° ÷ 90°
Indicator color	Open	Green
	Close	Red
ATEX classification*		-
Limit switch type		Mechanical
Limit switch (manufacturer part no.)		LS silver
Limit switch manufacturer		E-switch
Contacts		Silver
Function		SPDT
Wire number		3
Voltage		125 ÷ 250 VAC
Intensity		15 A
Switching frequency		-
Limit switch number		2
Wiring diagram number**		1

*For further information on the ATEX 2014/34/EU Directive, on classifications and protections, see from page III.1

**For wiring diagram see page 2.426.3

Standard dimensions

Type: **SB700**

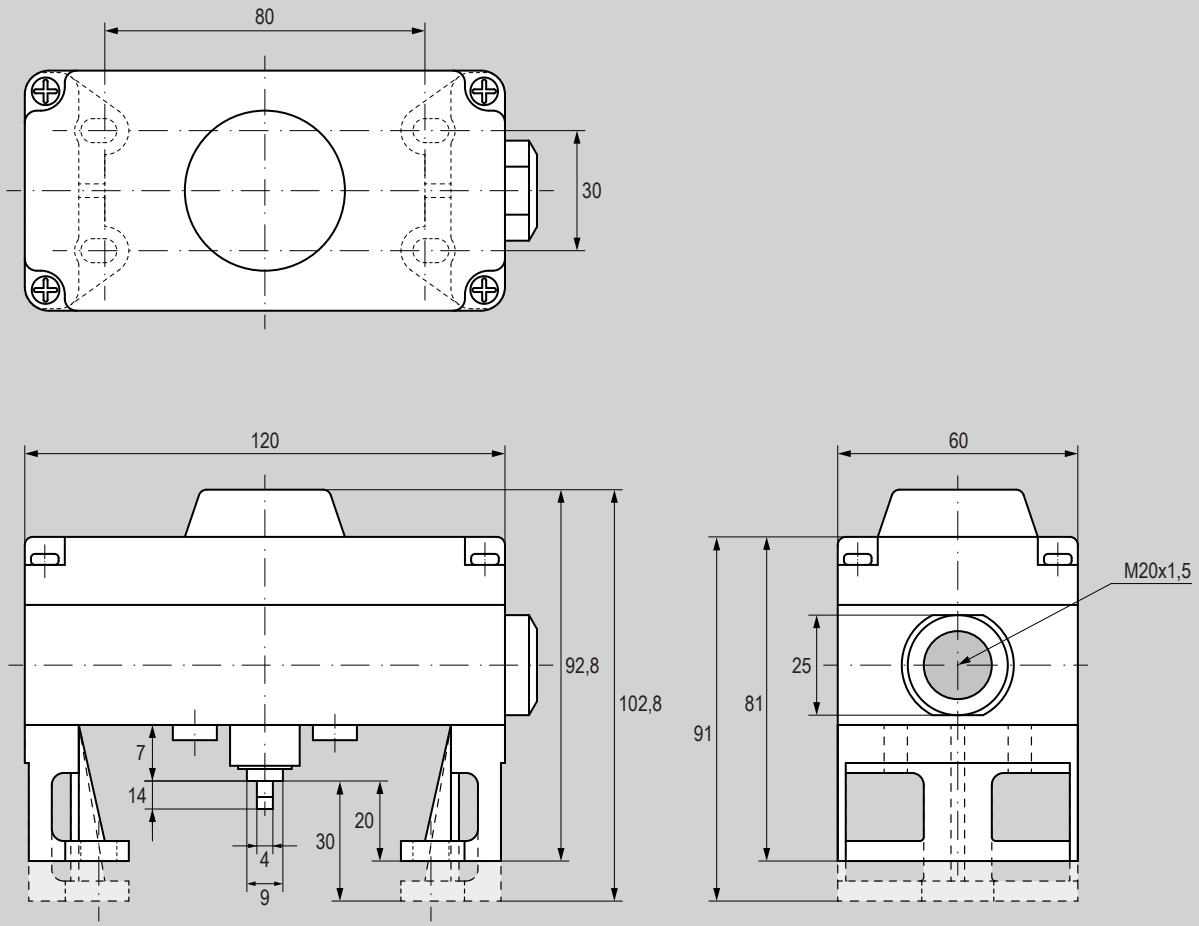

Series	Limit switch type	Limit switch manufacturer part no.	Code	Item
SB700	Mechanical	LS SILVER	811200	SB700M012

Accessories for rotary actuators
Handwheel gearbox

Code key

Series	Size
GDB	**102**

GDB

- 050 = Ø 50
- 070 = Ø 70
- 102 = Ø 102
- 140 = Ø 140
- 165 = Ø 165
- 254 = Ø 254

How to order

Series: **GDB**

Size: **102**

Notes

Options in the same grid are alternative to each others

Matching handwheel gearbox/rotary actuator (direct mounting)

Handwheel gearbox size	Actuator size																	
	Ø32	Ø40	Ø52	Ø63	Ø75	Ø83	Ø92	Ø105	Ø125	Ø140	Ø160	Ø190	Ø210	Ø240	Ø270	Ø300	Ø350	Ø400
Ø 50	●*	●*	●*	●	●	-	-	-	-	-	-	-	-	-	-	-	-	-
Ø 70	-	-	-	-	-	●	●	-	-	-	-	-	-	-	-	-	-	-
Ø 102	-	-	-	-	-	-	-	●	●	-	-	-	-	-	-	-	-	-
Ø 140	-	-	-	-	-	-	-	-	-	●	●	-	-	-	-	-	-	-
Ø 165	-	-	-	-	-	-	-	-	-	-	-	●	●	-	-	-	-	-
Ø 254	-	-	-	-	-	-	-	-	-	-	-	-	-	●	●	●	●	●

Key

● allowed matching; - not allowed matching

*Adapter and bracket required. For further informations please contact the sales department

Accessories for rotary actuators

Aluminium declutchable handwheel gearbox series GDB

Main features

Series	Size	Code	Item
GDB	Ø 50	811168	GDB050
	Ø 70	811169	GDB070
	Ø 102	811170	GDB102
	Ø 140	811171	GDB140
	Ø 165	811173	GDB165
	Ø 254	811174	GDB254



Technical data

Series	GDB					
Code	811168	811169	811170	811171	811173	811174
Item	GDB050	GDB070	GDB102	GDB140	GDB165	GDB254
Size	Ø 50	Ø 70	Ø 102	Ø 140	Ø 165	Ø 254
Class protection	IP 65					
Temperature range	-20°C ÷ +80°C					
Connections standards	ISO 5211					
Rotation	0° ÷ 90° (±5°)					
Gear ratio	1:40	1:38	1:36	1:50	1:55	1:62
Torque ratio (input:output)	1:9,6	1:12,5	1:12,5	1:10	1:19	1:19
Maximum torque output	300 Nm	360 Nm	810 Nm	1.310 Nm	2.800 Nm	5.500 Nm
Actuator square	14	14	22	27	36	46
Valve square	17	17	27	36	36	60
ISO flange actuator side	F05 / F07	F07 / F10	F10 / F12	F10 / F14	F14 / F16	F16 / F25
ISO flange valve side	F05 / F07	F07 / F10	F10 / F12	F10 / F14	F14	F16 / F25
Actuator matching	See page 2.425.6					

Standard dimensions

Type: **GDB**

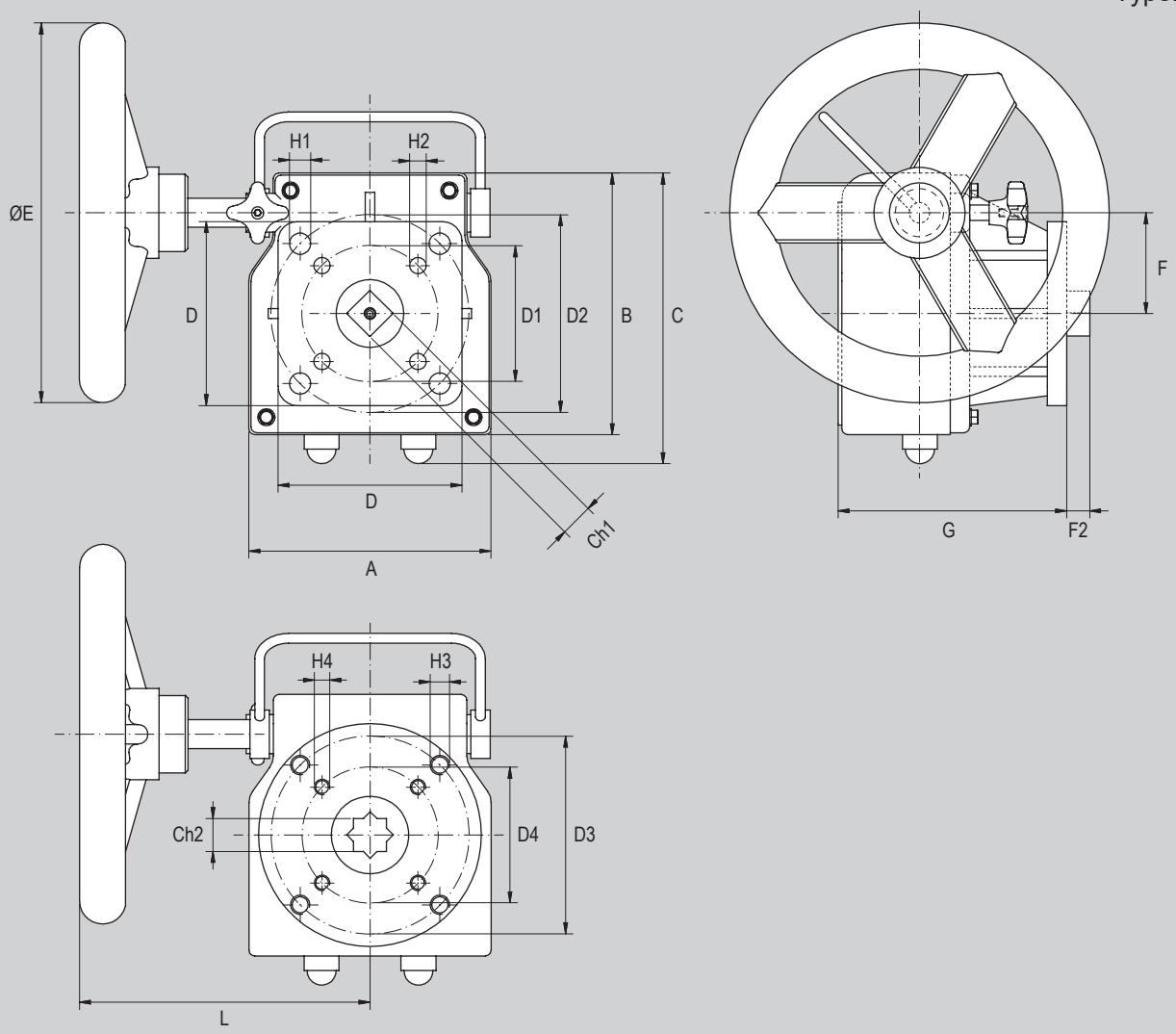

Item	Code	D	B	C	A	ØE	G	F2	F	L	D1	H1	D2	H2	D3	H3	D4	H4	Ch1	Ch2
GDB050	811168	70	110	125	90	200	100	14	44.2	145	50	8.5	70	6.5	70	M8x12	50	M6x10	14	17x19
GDB070	811169	103	135	150	125	200	118	14	52.2	180	70	10.5	102	8.5	102	M10x15	70	M8x12	14	17x19
GDB102	811170	115	160	185	140	300	124	22	65	190	102	12.5	125	10.5	125	M12x18	102	M10x15	22	27x29
GDB140	811171	130	200	225	185	400	162	27	85	260	102	17	140	10.5	140	M16x24	102	M10x15	27	36x39
GDB165	811173	165	243	268	230	600	181	36	104.5	420	140	21	165	-	140	M16x24	-	-	36	36x39
GDB254	811174	295	283	330	295	700	205	46	130	430	165	17	254	21	254	M16x24	165	M20x30	46	60x70

SPEED REGULATORS

for rotary actuators and valves Series A1N



Find out our
key products

- **Solution for most applications**
- **Easy and intuitive choice**
- **Excellent value for money**
- **Wide availability**
- **Fast delivery**

Features and certifications

Speed regulators for rotary actuators double acting (series APNRDA) and single acting (series APNRSR) for direct mounting to combine with NAMUR valves series A1N and/or positioners.
Speed regulators are designed with particular care to the micrometric adjustment pin to control the actuators opening and closing speed. Can accurately control the rotation of the actuator at every speed constantly and safely, without the fluctuation which is usually seen in the common speed controllers.
Supplied as standard in compliance to Reach and RoHS directives.
For rotary actuators see from page 2.400.1

Series APNRDA

from page 2.430.10



Series of speed regulator for double acting rotary actuators and 5/2, 5/3 valves.

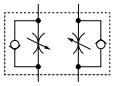

Series APNRSR

from page 2.430.20



Series of speed regulator for single acting rotary actuators and 3/2 valves.

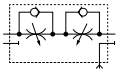

Series PNF

from page 2.430.50



Series of plates with threaded holes for the connection of fittings to speed regulators APNR. These plates are equipped with NAMUR interface and supplied complete with screws and O-ring.

Code key

Series	Function
APNR	**DA**

APNR

DA = For double acting actuators and 5/2 - 5/3 valves

SR = For single acting actuators and 3/2 valves

How to order

Series: **APNR**

Function: **DA**

Notes

For standard materials see the data sheet of single components.

Options in the same grid are alternative to each others.

Accessories

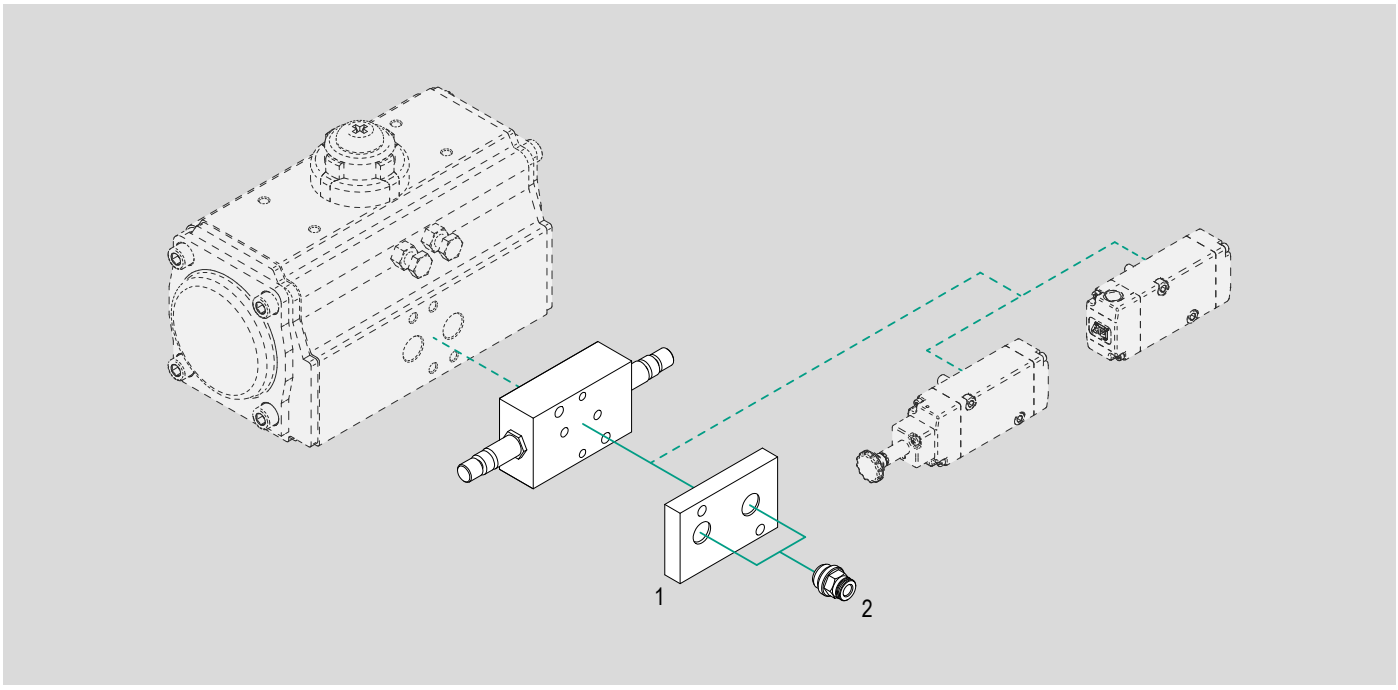

N.	Item	Description	Compliance	Matching		Code key & data sheet page
				APNRDA	APNRSR	
1	PNF	Mounting plate	NAMUR	●	●	2.430.50
2	R..	Push-in fittings	UNI ISO 228/1 UNI ISO7/1 ISO R/232	●	●	4.2.1

Key

● matching accessory; – not matching accessory

Speed regulators for rotary actuators and valves series A1N
Series APNRDA

Main features

Version	Code	Item	Symbol
For double acting actuators and 5/2 - 5/3 valves	810152	APNRDA	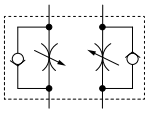



Technical data

Version	For double acting actuators and 5/2 - 5/3 valves
Code	810152
Item	APNRDA
Fluid	Compressed filtered and dryed air
Pressure range	1,5 ÷ 10 bar
Temperature range	-20°C ÷ +60°C
Nominal orifice Ø	3.74 mm
Flow (at 5 bar)	750 Nl/min.
Connections	NAMUR
Screws	M5x50 (2), M5x55 (2), M5x40 (2, for PNF plate, see page 2.56.20)

Standard materials

Description	Material
Body	Anodized aluminium
Seals	NBR
Screws	Stainless Steel
Elements in contact with fluid	Aluminium, brass, NBR

Standard dimensions

Type: **APNRDA**

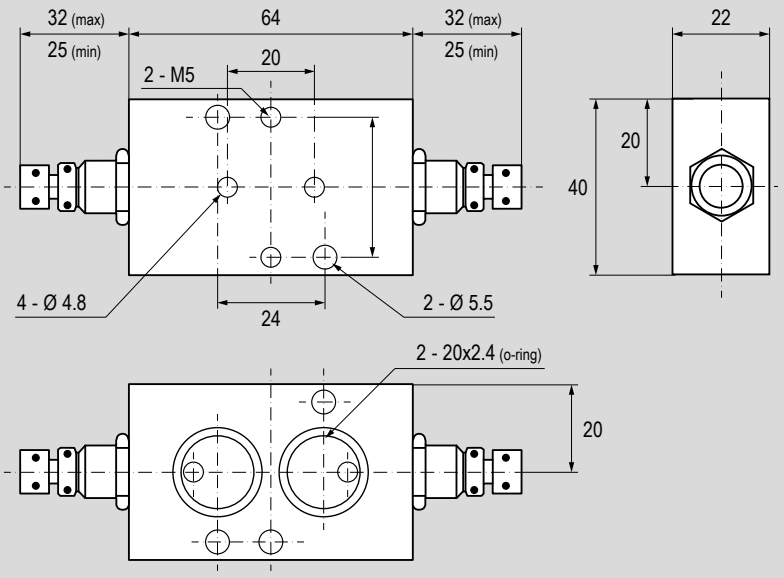

Speed regulators for rotary actuators and valves series A1N
Series APNRSR

Main features

Version	Code	Item	Symbol
For single acting actuators and 3/2 valves	810153	APNRSR	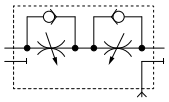



Technical data

Version	For single acting actuators and 3/2 valves
Code	810153
Item	APNRSR
Fluid	Compressed filtered and dryed air
Pressure range	1,5 ÷ 10 bar
Temperature range	-20°C ÷ +60°C
Nominal orifice Ø	3.74 mm
Flow (at 5 bar)	750 Nl/min.
Connections	NAMUR
Screws	M5x50 (2), M5x55 (2), M5x40 (2, for PNF plate, see page 2.56.20)

Standard materials

Description	Material
Body	Anodized aluminium
Seals	NBR
Screws	Stainless Steel
Elements in contact with fluid	Aluminium, brass, NBR

Standard dimensions

Type: **APNRSR**

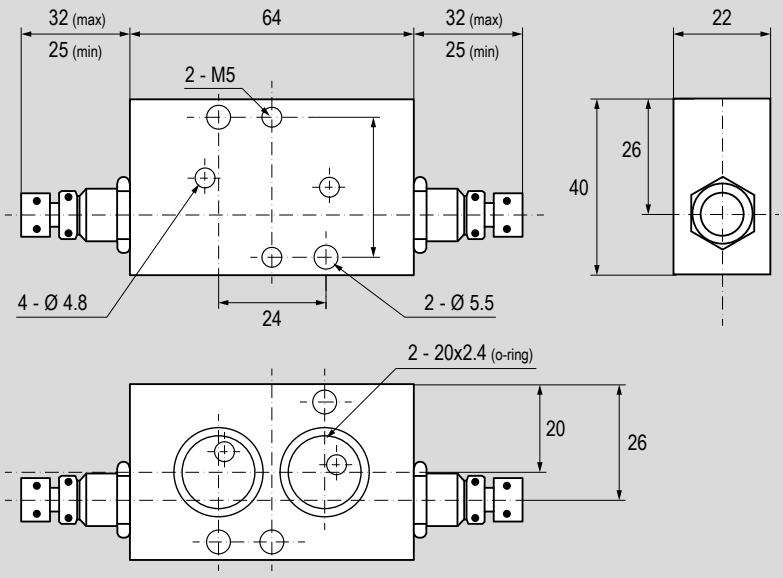

Main features

Version	Code	Item
Plate for speed regulators	034228	PNF



Standard materials

Description	Material
Body	Anodized aluminium
Screws	Black nickel-plated carbon steel
Seals	HNBR

Standard dimensions

Type: **PNF**

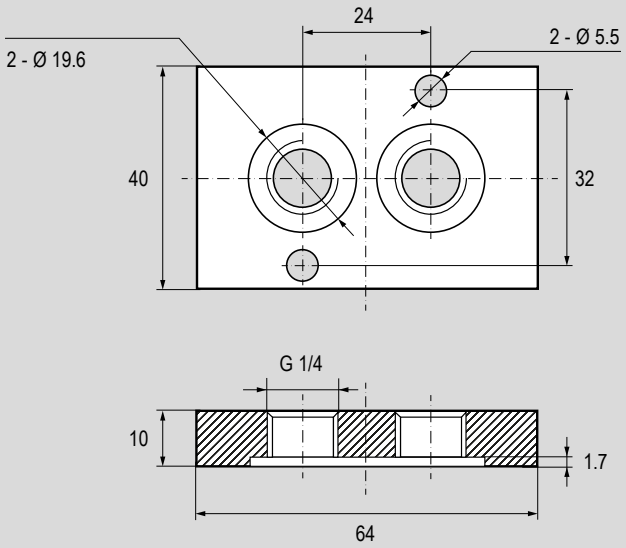

The kit include n. 2 screws and n. 2 O-ring

Notes

Notes

AIR TREATMENT

CHAPTER 3



General informations

Air treatment of the pneumatic plants	page 3.1.1

Modular units

page 3.2.1

Series		Type	Page
Filters		A..F	3.2.20
Mist separators		A..FD	3.2.30
Regulators		A..R	3.2.50
Precision regulators		A..RP	3.2.60
Lubricators		A..L	3.2.80
Lubricators with large capacity cup		A..LG	3.2.90
Filter-regulators		A..FRR	3.2.110
Filter-regulators+lubricators		A..FRRL	3.2.140
Soft-start solenoid operated valves		AVP..E	3.2.200
Soft-start air operated valves		AVP..P	3.2.210
Exhaust manual operated valves		VMS	3.2.250

F-R-L units 1-1/2" and 2"

page 3.6.1

Series		Type	Page
Filters		A..F	3.6.20
Regulators		A..R	3.6.50
Lubricators		A..L	3.6.80

Microregulators

Series		Type	Page
Microregulators		AC700	3.10.1

Pressure-gauges, vacuum-gauges and pressure switches

page 3.30.1

Series		Type	Page
Analogic pressure-gauges		M, MR, MF, MP	3.30.20
Digital pressure-gauges		AKP60P	3.30.40
Digital vacuum-gauges		AKP60V	3.30.40
Digital pressure switches		AKP43	3.30.60

End-of-line components

page 3.40.1

Series		Type	Page
Automatic condense drains		A..FLSA	3.40.10
Silenced exhaust filters		A..FLFS	3.40.30

Mounting accessories

Series		Type	Page
Spacers for modular components		D, DT, DSL, SL, DST, ST	3.90.1
Mounting brackets for modular units and microregulators		SR, SRP, SFL	3.90.1
Mounting brackets and adapters for digital pressure-gauges, vacuum-gauges and pressure switches		ABT, AKP, APAC, APAD	3.90.1

Notes

Compressed air treatment

The air destined for use in pneumatic devices must be suitably prepared.

It is taken from the surrounding environment for introduction into the compressor and is rich in impurities and water vapour.

The compressor itself inevitably releases lubricating oil into the air, which is very dangerous for the seals of the pneumatic components.

Following passage through the compressor, the compressed air is always stored in a large tank that has a dual function: to even out oscillations in pressure and to cool the compressed air.

Indeed, the high temperatures reached at the end of the compression process aid the evaporation of the water in the air against the condensing effect of the high pressures.

For these reasons, the tank located downstream of the compressor must be of a suitable size: in particular, in the case in which the compressor is volumetric and a high quantity of air is taken up.

It is very important that the compressed air has time to cool, allowing the water vapour contained in it to condense on the bottom of the tank, as it is considerably more convenient to eliminate as much of the water vapour as possible during this stage.

Even with these precautions, the percentage of humidity present in the compressed air remains important. Indeed, during distribution along the pipes, further condensation occurs, due to the further cooling of the air and despite the falls in pressure that aid the dissolution of the water. For this reason the distribution pipes must be slightly inclined (~2%) and feature umbrella-handle pipes at regular intervals that lead to small condensation collection tanks.

Particular attention must be paid to the lubricating oil, especially in the case of centrifugal compressors: it must be eliminated by means of appropriate oil extraction filters at the exit of the compressor.
The humidity of the air causes rust and corrosion in the metal pipes, deposits in the pneumatic devices and the formation of sleeves of ice at the discharge points in particular atmospheric conditions and for high-frequency use.

Safety in pneumatic systems

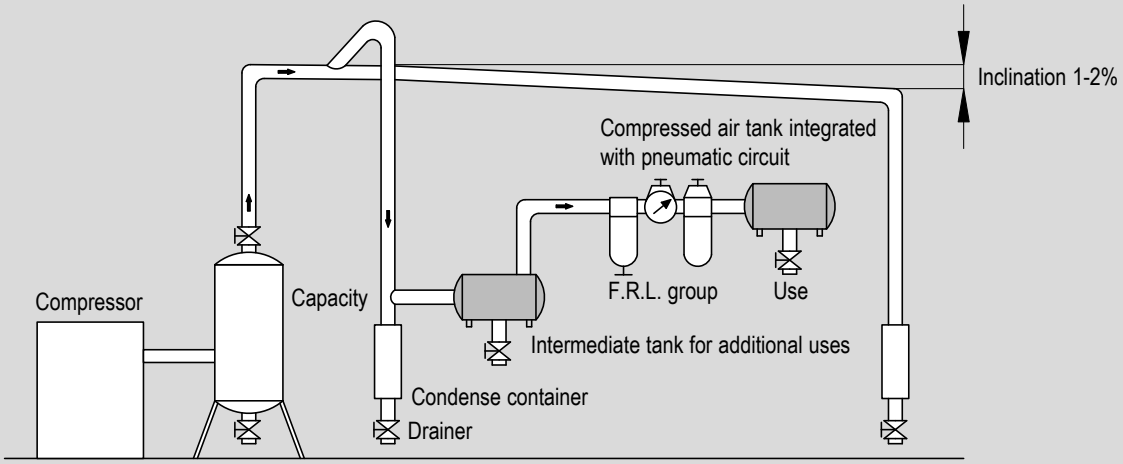

The operating safety and lifespan of the pneumatic devices depend to a considerable degree upon the proper preparation of the compressed air that feeds them, which is obtained by means of a series of devices that are located upstream of the part of the apparatus described so far, but before the actual pneumatic system.

Devices for compressed air treatment

Compressed air treatment equipment basically consists of: filters, pressure regulators, lubricators;
Also part of them, by extension, are: pressure-gauges, soft-start valves, insertion and sectioning valves, air reservoirs.

Filters

The impurities contained in the air: waste materials, powder, rust and humidity that condenses, can cause serious damage to the pneumatic components, compromising their functioning and duration, as they facilitate the wear of the flowing surfaces and the seals.

The filter have the important function of purifying the compressed air of solid particles and, as a collateral effect associated with their operating characteristics, also of a percentage of the liquid ones.

The filters are constituted by: a body with threaded ports, a transparent cup screwed onto it and a filtering cartridge.

The compressed air to be filtered is conveyed in a tangential direction from the supply mouth to the cup, where it assumes a cyclonic movement which enables the separation of the larger solid particles and a good part of the liquid particles; both collect on the bottom of the cup, from where they are discharged on a regular basis.

The finer solid particles, on the other hand, are captured by the filtering cartridge, which is made from sintered material (bronze, ceramic material&). Depending on its characteristics, the filtering cartridge captures solid particles of an average diameter of 40, 20 or 5 micron.
It is not possible in any case to restrain the liquid particles that do not collect on the bottom of the cup as they are drawn and pass the barrier.
Consequently the effect of separation of the condensation, which is introduced by the filter, is a secondary one; it is necessary to take care to discharge the condensation that is produced otherwise a dynamic equilibrium is produced in which as much condensation is removed as is produced.

The filters are normally equipped with a separator, beneath the cartridge, whose task is to keep the slimy liquid deposited still; levels above the separator must be discharged.
It is always advisable to choose a larger size filter in order to have the benefits of a large cup, considerable cooling of the air and good separation of the impurities.
It is not in any case possible to hold back sufficient liquid particles to achieve the effective extraction of oil from the air: it is just a matter of time before the oil, which is not filtered upstream, reaches the pneumatic components. A considerable percentage of humidity will also always be present in the air downstream of the filter. In order to eliminate the oil of the air compressor, it is necessary to adopt special oil extraction filters.
The choice of the cartridge depends on the degree of cleanliness necessary for the air to be used in the system.
The more complex the system, with small and fast-moving components, the greater must be the degree of filtration of the cartridge.
The ideal filter is a component that does not introduce falls in pressure. Actually, a fall of pressure always exists around a filter and depends largely on the degree of filtration.

It is advisable to limit the fall of pressure to 0.2 ÷ 0.3 bar, as the production costs of compressed air are very high and, if it is wished to maintain the supply pressure of the components constant, each fall in pressure translates into greater pressure to be generated by the compressor.
The filtering cartridge gets dirty very easily: if cleaning is neglected the flow of air across the filter can be greatly reduced; furthermore, in order to minimize falls in pressure, it is wise to clean it frequently, removing the grease from it and drying it.

Choosing size of filters

It is necessary to adapt the filters to the flow required by the system, or section of the system, which they feed.

The characteristic “fall in pressure - flow” curves of the filter are used for this purpose. They associate the variation in the falls in pressure around the filter with the variation of the flow and indicate the range of use (useful flow interval) of the component in an immediately comprehensible manner.

The range of use increases with the increase in the dimensions of the filter (of its ports).

It is advisable to choose a filter of such dimensions that, at the requested flow, the fall in pressure is maintained within the limits indicated above. In this case the filter also works well for the separation of the condensation.

An under-sized filter causes excessive falls in pressure, whilst the filtering effect is poor.

Normally a filter capable of providing the required flow, without high filtering capacities, but suitable for the supply of compressed air to the valves and pneumatic cylinders, is installed at the beginning of a system. Filters that provide better quality air are installed downstream of the derived devices - with a lower flow - that require it.

Type: **A12F**

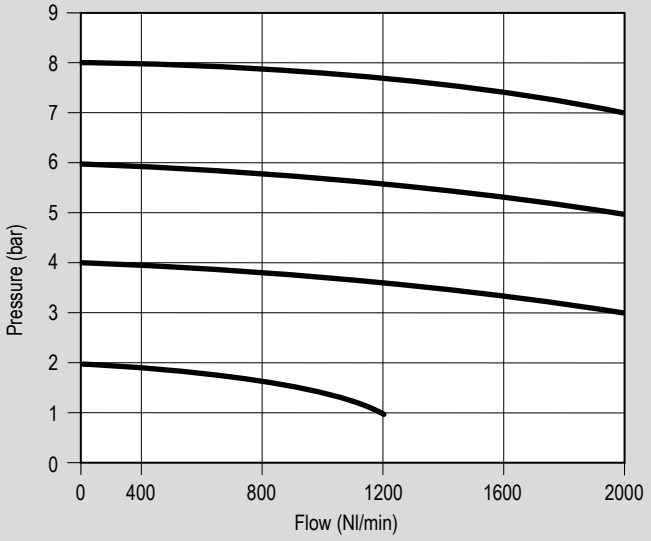

Pressure regulators

Pressure adjustment is always necessary upstream of a pneumatic device: it prevents falls of pressure in the network from distorting the conditions of use.

The performance of valves and pneumatic cylinders are highly dependant on the value of the supply pressure. Some components require precise and constant pressures in order to work properly.

A pressure regulator is always installed upstream of the system, and its task is to maintain the operating pressure at the output opening constant with the variation of the flow and the constant pressure in the tank.
Rapid and considerable variations in flow, corresponding to consumption peaks, tend to cause falls in pressure that can be controlled by the use of suitably sized reserve tanks.

The reduced operating pressure is less than the output pressure of the compressor; both must be appropriately controlled. Indeed, whilst it is true that lower material costs and, at an equivalent power, lower flows of used air would be incurred by making the pneumatic components function at high pressure, it is equally true that the production costs of compressed air are very high and increase considerably with the increase in the value of the pressure at which the air is supplied.
If the thermodynamic efficiency of the compressor - which is notoriously bad and decreases with the increase in the final pressure - is multiplied by the bad conversion efficiency of mechanical energy into pressure energy, a very low final efficiency figure is obtained that justifies the high production costs of compressed air.
In addition, it is necessary to consider the fact that it is, in practice, impossible to eliminate the losses of compressed air, which increase proportionately with the pressure.

On average, a system can lose up 20% of its compressed air through bad connections in correspondence with fittings and plugs.
In the presence of two cost causes, one increasing and the other decreasing in relation to the pressure, it is possible to identify a pressure value that corresponds to the minimum cost.

The optimum operating pressure has long been established as 6 bar. The pressure in the tank must be that much higher in order to guarantee its cooling and energy flywheel functions.

Pressure regulators are basically constituted by:
- a body, divided into a bell (with hand-wheel for adjustments and spring) and an actual valve body (with obturator disc) equipped with threaded openings.
- a diaphragm between the two parts.

The air that arrives from the supply port is blocked (or allowed to pass) by an obturator disc which is opened and closed by means of a small rod controlled by the diaphragm in equilibrium between the two forces: one, above, (caused by a charged spring or a pressure) that is preset; the other, below, caused by the reduced pressure in the pipe downstream of the regulator.

Each variation in flow causes a temporary variation of the reduced pressure and thus an imbalance in these two forces that causes the movement of the diaphragm with the consequent opening or closure of the disc.
A reduction in flow causes the following temporary effects: an increase in the reduced pressure with the closure of the disc; an increase in the pressure fall, due to the reduction of the passage space and a decrease in the reduced pressure, with oscillations around the point of equilibrium, until it returns the previous value, which is the only one capable of balancing the preset force.
An increase in flow causes: a decrease in the reduced pressure; the opening of the disc; a decrease in the pressure fall, due to the increased passage space and an increase in the reduced pressure until it returns to the previous value.
In both cases the pressure regulator restores the conditions of equilibrium with a new position of the obturator disc, which is suited to the changed flow demand.

In the case of constant supply pressure and highly variable flows, the pressure regulators are self-adjusting; i.e. they maintain the reduced pressure basically constant.

The greater the dimensions of the diaphragm, the greater the sensitivity of the reducer and its ability to maintain the reduced pressure constant.

Choosing size of pressure regulators

The characteristic “fall in reduced pressure - flow” curves are used for this purpose as they provide the range of use of the component in an immediately comprehensible manner.
It is always advisable to choose a regulator capable of supplying the flow of air required by the system, upstream of which it is installed, with as low a possible fall in reduced pressure: max. 0.5 bar.
The range of use of the regulator is associated with the dimensions of the ports used (standardized) and thus to the dimensions of the regulator. In order to achieve sensitivity, speed of response and small falls, it is necessary to choose large bodies with large diaphragms.

Two basic types of regulators can be identified:
- precision regulators, with large diaphragms
- commercial regulators, where the aesthetic aspect is important.

In order to achieve the most precise and easiest setting of the pressure, various ranges of reduced pressure are supplied for each type of regulator, by equipping them with pre-charging springs with different elastic constants.
Another significant construction characteristic for the choice of a regulator is the presence of a device that enables excess pressure in relation to the preset reduced value to be discharged into the atmosphere; in the absence of flow, this is achieved by simply varying the charge of the spring.
This process, known as relieving, consists in equipping the diaphragm with a hole with a seal upon which the controlled rod rests. As the disc reaches the end of its stroke against the closure opening, each further increase in pressure raises the diaphragm above the rod, releasing the air from a hole in the bell until equilibrium is restored.

Type: **A12R**

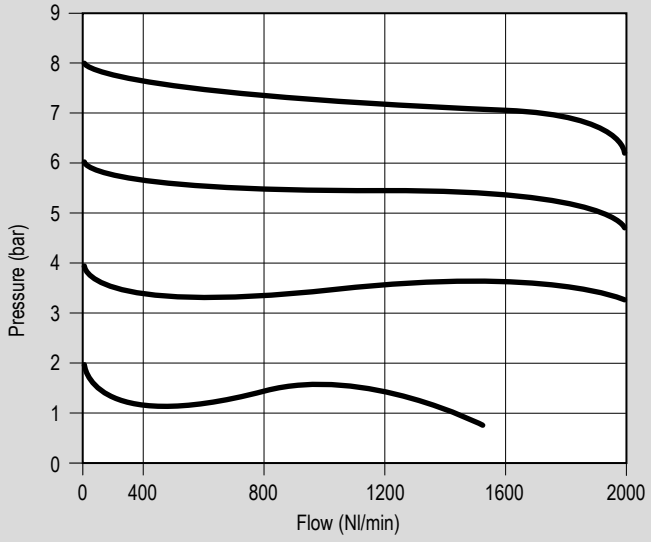

Lubricators

The pneumatic devices are equipped with mechanical organs with relative movement and consequently require lubrication, which is also important in order to limit wear of the seals.

Valves and pneumatic cylinders are currently supplied with assembly lubrication, which is capable of ensuring them a long life in normal working conditions.
Lubrication is necessary in the case of pneumatic tools and particular working conditions (e.g. components that operate at high speeds or in the presence of high temperatures, which are conditions that cause the assembly lubrication to evaporate and be removed by the air).
Lubrication is performed by lubricating the air that flows through the components with mineral oil that does not contain additives that could corrode the seals.

The task of the lubricators is to dose the air with a certain quantity of nebulized oil.
The air itself transports the oil along stretches of piping, the length of which increases as the size of the drops of the micro-mist decrease.

The lubricators are made up of:
- a body with threaded ports, containing a Venturi connected by means of a small tube
- a cup, to be screwed onto the body, into which the lubricating oil is poured.

The air, entering from the supply opening, crosses the Venturi constriction, where it creates a reduction in pressure that draws the oil from the cup through the small tube, nebulizing it and sending into the pipes.

An adjustment screw makes it possible to regulate the quantity of oil introduced.
There is a minimum operating flow, characteristic of each range of lubricators, beneath which a sufficient fall in pressure is not achieved in the constriction and consequently the oil is not drawn.

Choosing size of lubricators

The characteristic “fall in pressure - flow” curves are used for this purpose as they permit the rapid identification of the range of use.

It is advisable to choose the lubricator in such a way as to limit the falls of pressure.

The flows provided are, as always, associated with the dimensions and thus to the ports of the lubricator.

MODULAR
units



Find out our
key products

- **Solution for most applications**
- **Easy and intuitive choice**
- **Excellent value for money**
- **Wide availability**
- **Fast delivery**

Main features and certifications

Aluminium modular air treatment units.
Supplied as standard in compliance to Reach and RoHS directives, and SIL certified.

Filters series A..F, 1/4" ÷ 1"

from page 3.2.20



Aluminium modular filters, available in sizes 1/4", 3/8", 1/2" and 1". Equipped with 25µm filtering element and semi-automatic condense drain. The polycarbonate cup is with metal protection.
Mounting brackets to be ordered separately.
Spare parts available for filter cartridge, cup and cup seals.

Mist separators series A..FD, 3/8" ÷ 1"

from page 3.2.30



Aluminium modular mist separators, available in sizes 3/8", 1/2" and 1". Equipped with 0.3µm filtering element and semi-automatic condense drain. The polycarbonate cup is with metal protection.
Mounting brackets to be ordered separately.
Spare parts available for filter cartridge, cup and cup seals.

Regulators series A..R, 1/4" ÷ 1"

from page 3.2.50



Aluminium modular regulators, available in sizes 1/4", 3/8", 1/2" and 1". Equipped with relieving valve and practical plastic regulation knob with position lock.
Pressure-gauges and mounting brackets to be ordered separately.
Spare parts available for regulator diaphragm.

Precision regulators series A..RP, 1/8" ÷ 1/2"

from page 3.2.60



Aluminium modular precision regulators, available in sizes 1/8", 1/4" and 1/2". Equipped with relieving valve (also with threaded exhaust for size 1/2" only) and practical plastic regulation knob. Three different pressure regulation ranges available. Pressure-gauges and mounting brackets to be ordered separately.
Note:
Size 1/8" can be mounted in combination with modular component size 1/4" only.
Size 1/4" can be mounted in combination with modular component size 3/8" only.
Size 1/2" can be mounted in combination with modular component size 1/2" ony.

Lubricators series A..L, 1/4" ÷ 1"

from page 3.2.80



Aluminium modular lubricators, available in sizes 1/4", 3/8", 1/2" and 1". Equipped with oil regulation cup, and polycarbonate cup with metal protection.
The lubricant can be added without stopping the air supply.
Mounting brackets to be ordered separately.
Spare parts available for oil regulation cup, cup and cup seals.

Lubricators with large capacity cup series A..LG, 1/4"

from page 3.2.90



Aluminium modular lubricators with large capacity cup, available in size 1/4" only. Equipped with oil regulation cup and wide visibility polycarbonate cup.
The lubricant can be added without stopping the air supply.
Mounting brackets to be ordered separately.



Filter-regulators series A..FRR, 1/4" ÷ 1"

from page 3.2.110



Aluminium modular filter-regulators, available in sizes 1/4", 3/8", 1/2" and 1". Equipped with 25µm filtering element, semi-automatic condense drain, relieving valve and plastic handy regulation knob with position lock. The polycarbonate cup is with metal protection.
Pressure-gauges and mounting brackets to be ordered separately.
Spare parts available for regulator diaphragm, filter cartridge, cup and cup seals.

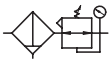

Filter-regulators + lubricators series A..FRRL, 1/4" ÷ 1"

from page 3.2.140



Aluminium modular filter-regulators with lubricator, available in sizes 1/4", 3/8", 1/2" and 1". Equipped with 25µm filtering element, semi-automatic condense drain, relieving valve, oil regulation cup and plastic handy regulation knob with position lock. The polycarbonate cups are with metal protection. The lubricant can be added without stopping the air supply. Supplied assembled with "T" type bracket.
Pressure-gauges and further mounting brackets to be ordered separately.
Spare parts available for regulator diaphragm, oil regulation cup, filter cartridge, cup and cup seals.

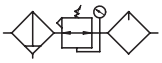

Soft-start solenoid operated valves series AVP..E, 1/4" ÷ 1/2"

from page 3.2.200



Aluminium modular soft-start solenoid operated valves, available in sizes 1/4", 3/8" and 1/2", allow the gradual pressurization of pneumatic systems at startup. Ideal as emergency sectioning valves, with rapid downstream line exhaust. These valves ensure low consumption, are equipped with manual override and exhaust function.
Coils, connectors, pressure-gauges and mounting brackets to be ordered separately.

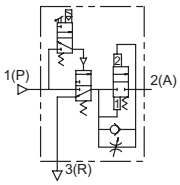

Soft-start air operated valves series AVP..P, 1/4" ÷ 1/2"

from page 3.2.210



Aluminium modular soft-start air operated valves, available in sizes 1/4", 3/8" and 1/2", allow the gradual pressurization of pneumatic systems at startup. Ideal as emergency sectioning valves, with rapid downstream line exhaust. These valves ensure low consumption and are equipped with exhaust function.
Pressure-gauges and mounting brackets to be ordered separately.

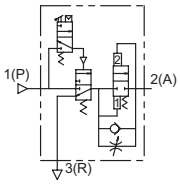

Exhaust manual operated valves series VMS, 1/4" ÷ 1"

from page 3.2.250



Aluminium modular exhaust manual operated 3 way valves, available in sizes 1/4", 3/8", 1/2" and 1", allow manual exhaust of residual air from the system. Padlock applicable to the operating knob to prevent unauthorized use.
Mounting brackets to be ordered separately.



Options

Description	Symbol	Suffix
Filter cartridge 5 µm		**5**
Automatic condense drain for filter (only for sizes 3/8" - 1/2" - 1")		**SA**
Metal cup		**TM**
Regulation range 0,5 ÷ 4 bar		**04**
NPT thread		**NPT**

The options, when this is possible, can be combined with each other. For options matching see table on the next page; For code key see from page 3.2.6

Options matching

Type	Size	Model	Standard options matching				
			5	**SA**	**TM**	**04**	**NPT**
A..F	1/4"	Standard	●	-	●	-	●
		Metal cup (TM)	●	-		-	●
	3/8"-1/2"-1"	Standard	●	●	●	-	●
		Automatic condense drain (SA)	●		●	-	●
		Metal cup (TM)	●	●		-	●
A..FD	3/8"-1/2"-1"	Standard	-	●	●	-	●
		Automatic condense drain (SA)	-		●	-	●
		Metal cup (TM)	-	●		-	●
A..R	1/4"	Standard	-	-	-	●	●
		Regulation range 0,5 ÷ 4 bar (04)	-	-	-		●
	3/8"-1/2"-1"	Standard	-	-	-	●	●
		Regulation range 0,5 ÷ 4 bar (04)	-	-	-		●
A..RP	1/8"-1/4"-1/2"	Standard	-	-	-	-	●
A..L	1/4"	Standard	-	-	●	-	●
		Metal cup (TM)	-	-		-	●
	3/8"-1/2"-1"	Standard	-	-	●	-	●
		Metal cup (TM)	-	-		-	●
A..LG	1/4"	Standard	-	-	-	-	●
A..FRR	1/4"	Standard	●	-	●	●	●
		Metal cup (TM)	●	-		●	●
		Regulation range 0,5 ÷ 4 bar (04)	●	-	●		●
	3/8"-1/2"-1"	Standard	●	●	●	●	●
		Automatic condense drain (SA)	●		●	●	●
		Metal cup (TM)	●	●		●	●
		Regulation range 0,5 ÷ 4 bar (04)	●	●	●		●
A..FRRL	1/4"	Standard	●	-	●	●	●
		Metal cup (TM)	●	-		●	●
		Regulation range 0,5 ÷ 4 bar (04)	●	-	●		●
	3/8"-1/2"-1"	Standard	●	●	●	●	●
		Automatic condense drain (SA)	●		●	●	●
		Metal cup (TM)	●	●		●	●
		Regulation range 0,5 ÷ 4 bar (04)	●	●	●		●
AVP..E	1/4"-3/8"-1/2"	Standard	-	-	-	-	●
AVP..P	1/4"-3/8"-1/2"	Standard	-	-	-	-	●
VMS	1/4"-3/8"-1/2"-1"	Standard	-	-	-	-	●

Key
● allowed matching; - not allowed matching

Modular units (F-R-L) code key

Series	Size	Function	Options (1)				
A	**12**	**FRRL**			**TM**		
A	18 (7) = 1/8"	FRRL = Filter-regulator + lubricator	5	SA (5)	TM	04 (6)	NPT
	14 = 1/4"	FRR = Filter-regulator					
	38 = 3/8"	F = Filter					
	12 = 1/2"	FD (2) = Mist separator					
	01 = 1"	R = Regulator					
		RP01-2 (3) = Precision regulator with pressure regulation range 0,1 ÷ 2 bar					
		RP01-4 (3) = Precision regulator with pressure regulation range 0,1 ÷ 4 bar					
		RP01-8 (3) = Precision regulator with pressure regulation range 0,1 ÷ 8 bar					
		L = Lubricator					
		LG (4) = Lubricator with large capacity cup					

How to order

Series	Size	Function	Options
A	**12**	**FRRL**	**TM**

Notes

For standard materials see table at page 3.2.8

Options in the same grid are alternative to each others.

(1) For further information on options and their matching see from page 3.2.4

(2) Mist separator type FD available in sizes 3/8", 1/2" and 1" only.

(3) Precision regulator type RP available in sizes 1/8", 1/4" and 1/2" only.

(4) Lubricator with large capacity cup type LG available in size 1/4" only.

(5) Automatic condense drain (SA) option, available in sizes 3/8", 1/2" and 1" only.

(6) Available for regulators types R, FRR and FRRL only.

For examples of possible combinations between modular components, see from page 3.2.10

Combining modular components require spacers (with seals) and/or brackets, to be ordered separately, see page 3.2.300

For accessories, to be ordered separately, see from page 3.2.12

For spare parts, to be ordered separately, see from page 3.2.400

Modular soft-start valves code key

Series	Size	Actuation	Options (1)
AVP	**12**	**E**	**NPT**
AVP	14 = 1/4" 38 = 3/8" 12 = 1/2"	E = Electric P = Pneumatic	NPT

How to order

Series	Size	Azionamento	Options
AVP	**12**	**E**	**NPT**

Notes

For standard materials see table at page 3.2.9

Options in the same grid are alternative to each others.

(1) For further information on options and their matching see from page 3.2.4

For examples of possible combinations between modular components, see from page 3.2.10

Combining modular components require spacers (with seals) and/or brackets, to be ordered separately, see page 3.2.300

For accessories (including coils and connectors for solenoid operated valves), to be ordered separately, see from page 3.2.12

Modular exhaust manual operated valves code key

Series	Size	Options (1)
VMS	**12**	**NPT**
VMS	14 = 1/4" 38 = 3/8" 12 = 1/2" 01 = 1"	NPT

How to order

Series	Size	Options
VMS	**12**	**NPT**

Notes

For standard materials see table at page 3.2.9

Options in the same grid are alternative to each others.

(1) For further information on options and their matching see from page 3.2.4

For examples of possible combinations between modular components, see from page 3.2.10

Combining modular components require spacers (with seals) and/or brackets, to be ordered separately, see page 3.2.300

For accessories, to be ordered separately, see from page 3.2.12

Standard materials for modular filters, regulators and lubricators

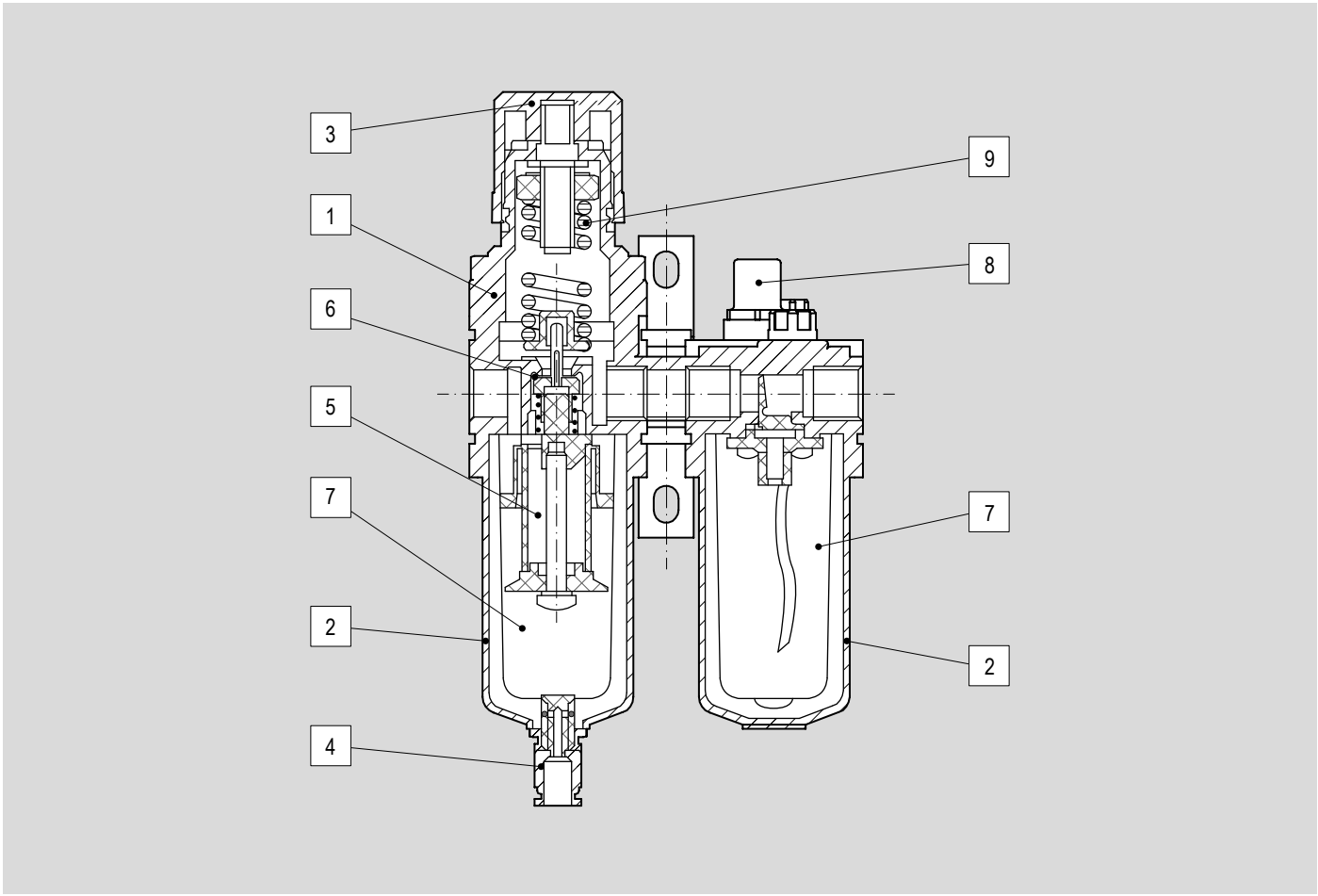

Position	Description	Material
1	Body	Die-cast aluminium
2	Cup protection	Die-cast aluminium
3	Regulation group	Plastic
4	Condense drain	Nickel-plated brass
5	Filtering element	Sintered bronze
6	Diaphragm	NBR
7	Cups	Polycarbonate
8	Sight-glass	Polycarbonate
9	Springs	Spring steel

Standard materials for modular soft-start valves

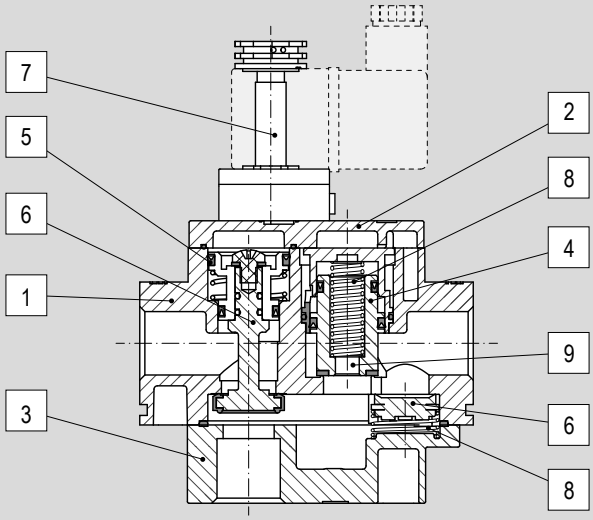

Position	Description	Material
1	Body	Painted aluminium
2	Cover	Painted aluminium
3	End cover	Painted aluminium
4	Piston guide	POM / NBR
5	Seals	NBR
6	Internal components	Brass / NBR
7	Plunger	Brass
8	Springs	Stainless Steel
9	Piston	Brass / NBR

Standard materials for modular exhaust manual operated valves

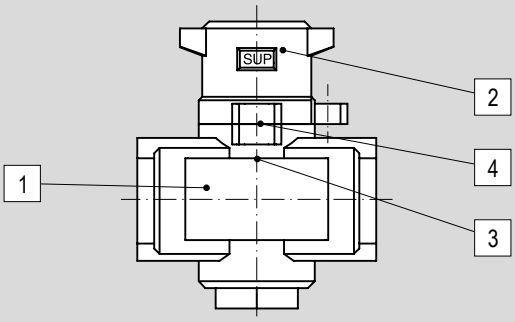

Position	Description	Material
1	Body	Painted aluminium
2	Knob	Painted aluminium
3	Seals	NBR
4	Bush	Stainless Steel

Most commonly used optional combinations

Type: **F+R+L**

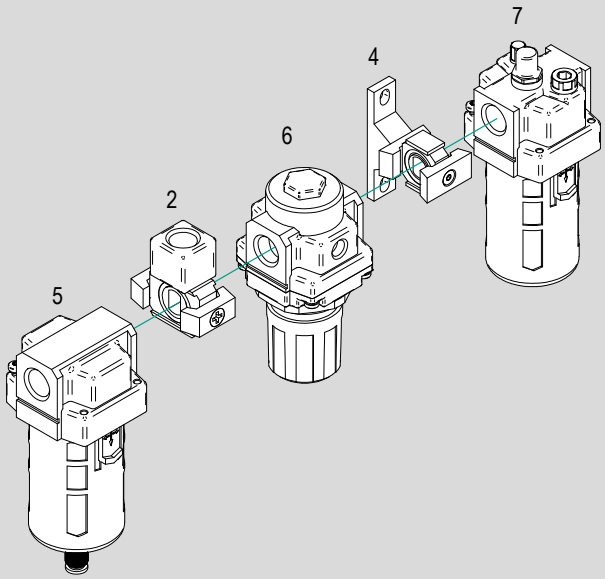

Type: **FRRL+AVP..E**

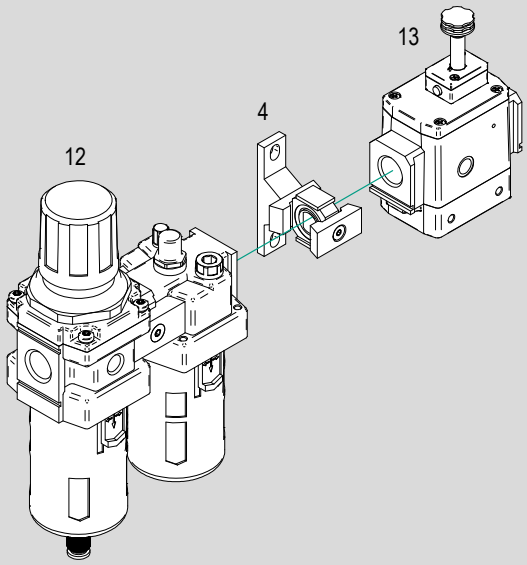

Type: **FRRL+VMS**

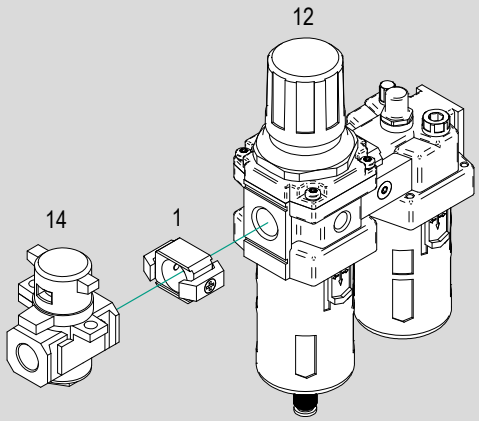

Type: **F+FD+RP**

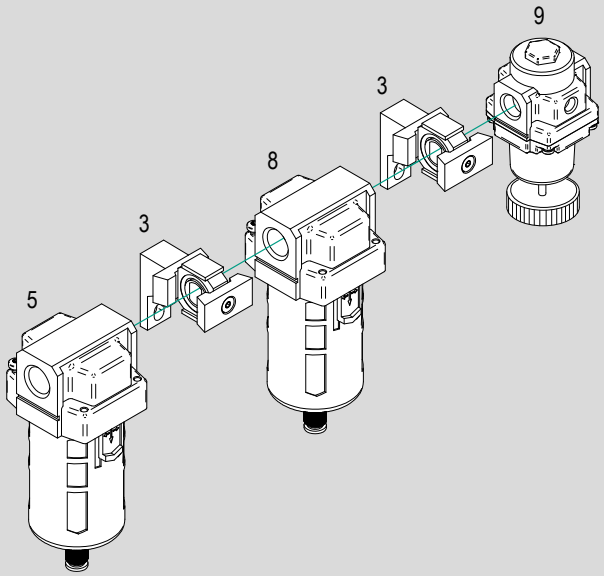

Type: **F+FRR+LG**

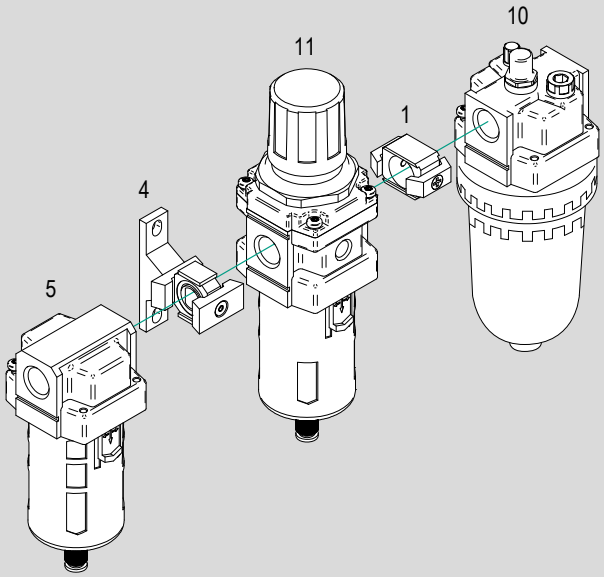

N.	Size	Item	Description	Data sheet page
1	1/4" ÷ 1"	D	Spacer	3.92.1
2	1/4" ÷ 1"	DT	Spacer with "T" type porting block	3.92.1
3	1/4" ÷ 1"	DSL	Spacer with "L" type bracket	3.92.2
4	1/4" ÷ 1"	DST	Spacer with "T" type bracket	3.92.3
5	1/4" ÷ 1"	F	Filter	3.2.20
6	1/4" ÷ 1"	R	Regulator	3.2.50
7	1/4" ÷ 1"	L	Lubricator	3.2.80
8	3/8" ÷ 1"	FD	Mist separator	3.2.30
9	1/8" ÷ 1/2"	RP	Precision regulator	3.2.60
10	1/4"	LG	Lubricator with large capacity cup	3.2.90
11	1/4" ÷ 1"	FRR	Filter-regulator	3.2.110
12	1/4" ÷ 1"	FRRL	Filter-regulator+lubricator	3.2.140
13	1/4" ÷ 1/2"	AVP..E	Soft-start solenoid operated valve	3.2.200
14	1/4" ÷ 1"	VMS	Exhaust manual operated valve	3.2.250

Accessories

Type: **FRRL, FRR, F, FD, R, RP, L, LG**

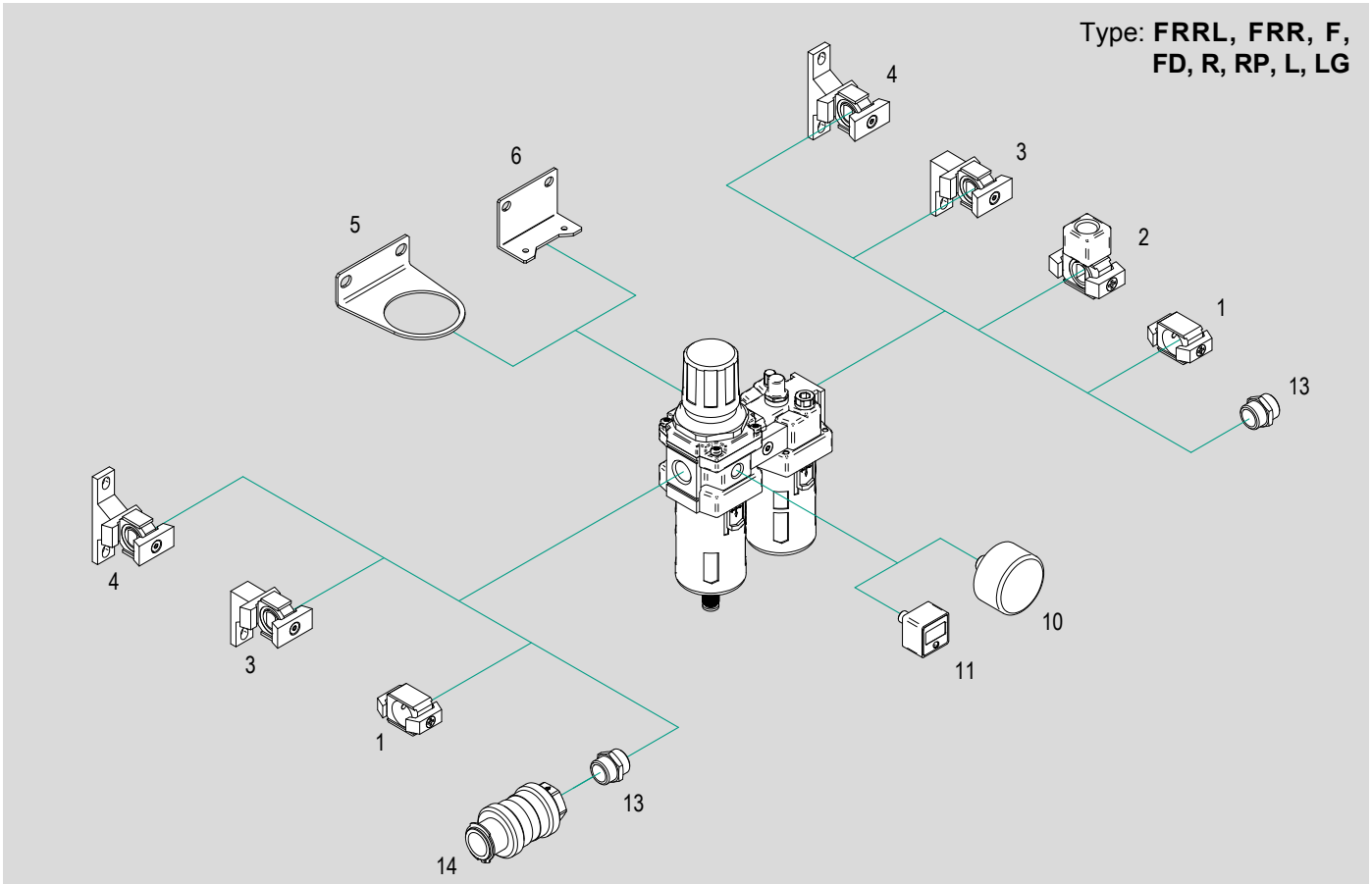

Type: **AVP..E AVP..P**

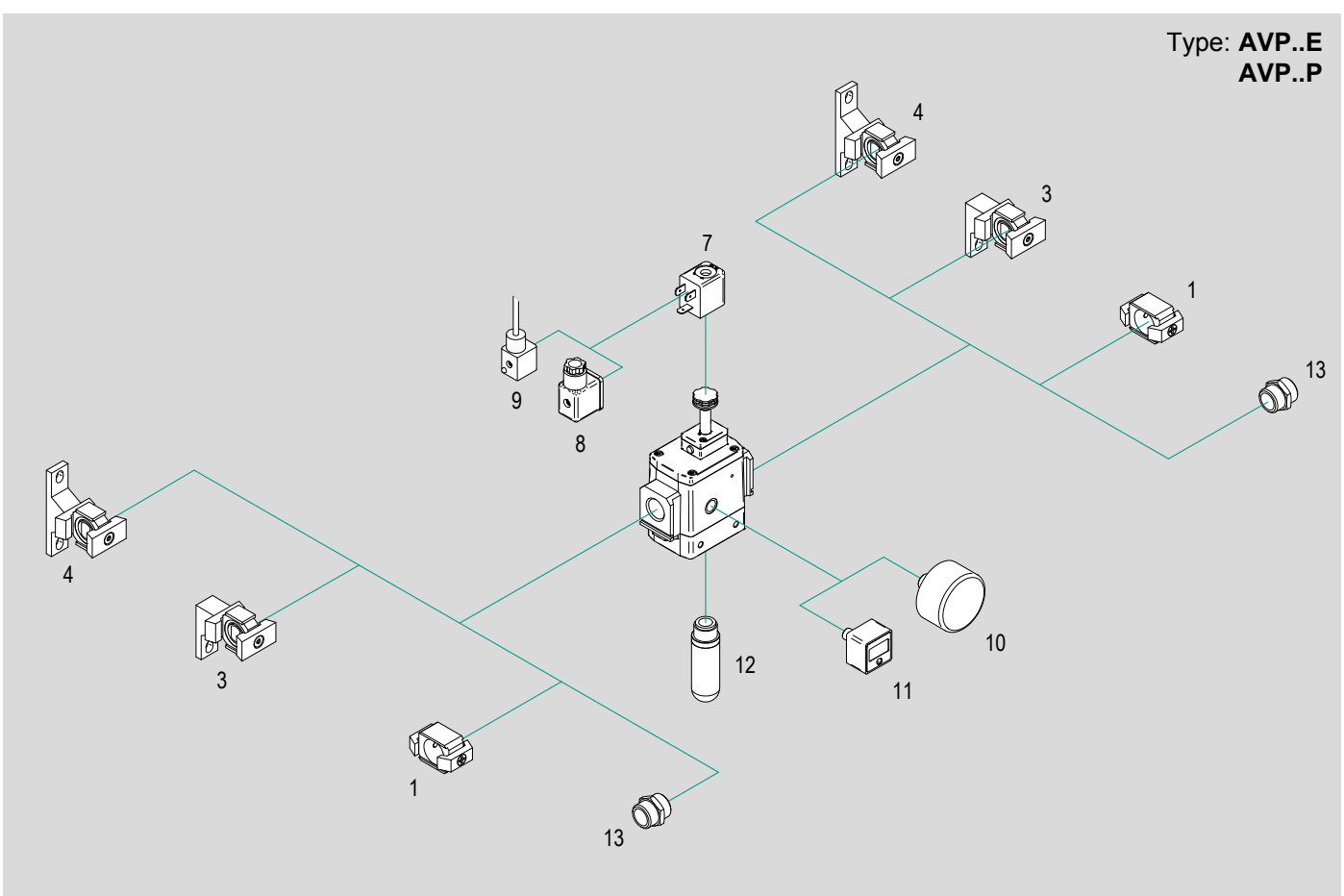

Type: **VMS**

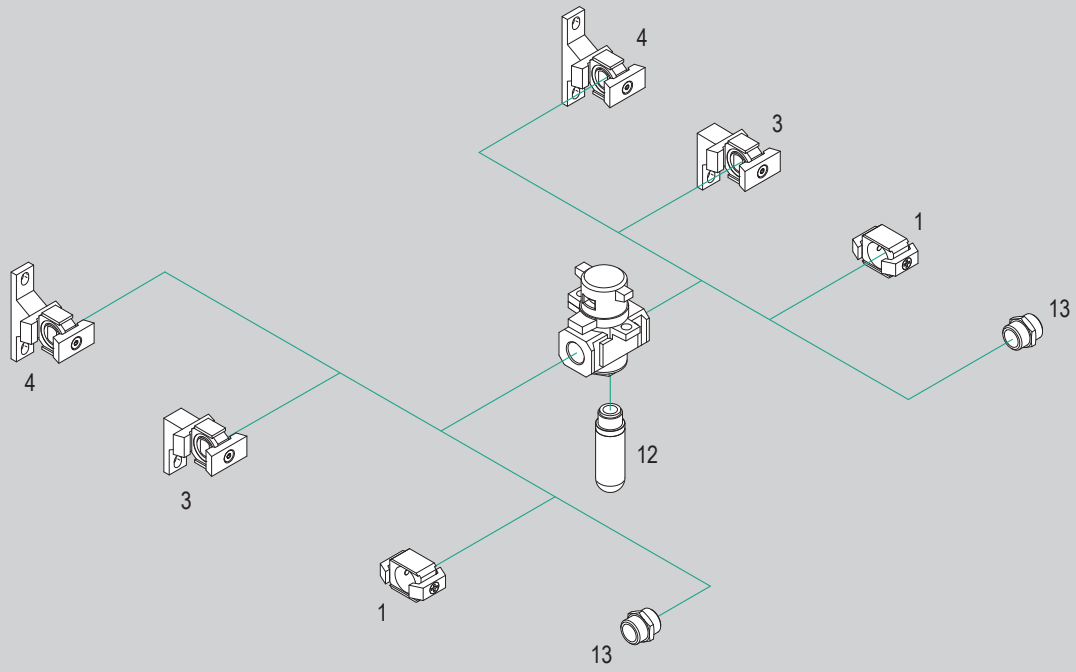

N.	Size	Item	Description	Matching											Code key page	Data sheet page
				FRRL	FRR	F	FD	R	RP	L	LG	AVP..E	AVP..P	VMS		
1	1/4" ÷ 1"	D..	Spacer	●	●	●	●	●	●	●	●	●	●	●	3.2.300	3.92.1
2	1/4" ÷ 1"	DT..	Spacers with "T" type porting block	●[1]	-	●	●	●	●	●[1]	●[1]	-	-	-		3.92.1
3	1/4" ÷ 1"	DSL..	Spacer with "L" type bracket	●	●	●	●	●	●	●	●	●	●	●		3.92.2
4	1/4" ÷ 1"	DST..	Spacer with "T" type bracket	●[2]	●	●	●	●	●	●	●	●	●	●		3.92.3
5	1/4" ÷ 1"	SR..	Mounting brackets	●	●	-	-	●	-	-	-	-	-	-		3.94.1
6	1/4" ÷ 1"	SL..		-	-	-	-	-	-	●	-	-	-	-		3.94.2
	1/8" ÷ 1/2"	SRP..		-	-	-	-	-	●	-	-	-	-	-		
7	1/4" ÷ 1/2"	ASA12..	Coils	-	-	-	-	-	-	-	-	●	-	-		2.315.1
8	1/4" ÷ 1/2"	A12209N..	Connectors	-	-	-	-	-	-	-	-	●	-	-		2.318.1
9	1/4" ÷ 1/2"	A12209NK..	Cabled connectors	-	-	-	-	-	-	-	-	●	-	-		
10	1/4" ÷ 1"	M..	Analogic pressure-gauges	●	●	-	-	●	●	-	-	●	●	-	3.30.20	
11	1/4" ÷ 1"	AKP60P..	Digital pressure-gauges	●	●	-	-	●	●	-	-	●	●	-	3.30.40	
12	1/4" ÷ 1"	AS..	Plastic silencers	-	-	-	-	-	●[3]	-	-	●	●	●	4.151.20	
13	1/4" ÷ 1"	A..	BSP nipple male/ male	●	●	●	●	●	●	●	●	●	●	●	4.35.1	
14	1/4" ÷ 1/2"	V26..	Slide valves	●	●	●	●	●	●	●	●	-	-	-	3.2.90	2.251.1

Key
● matching accessory; - not matching accessory

1) On the lubricator can only be mounted to the "out" port
2) supplied as standard
3) for size 1/2" only

Notes

Main features

Code	Item	Size	Function	Symbol
090102	A14F	1/4"	Filter	
090107	A38F	3/8"		
090112	A12F	1/2"		
090117	A01F	1"		



Technical data

Type	A14F	A38F	A12F	A01F
Size	1/4"	3/8"	1/2"	1"
Fluid	Compressed air			
Maximum inlet pressure	10 bar			
Temperature range	0°C ÷ +60°C			
Flow (at 6 bar)	750 Nl/min.	1500 Nl/min.	4000 Nl/min.	7000 Nl/min.
Filtering element	25 µm (standard)	5 µm (5)		
Cup capacity	15 cm^3	20 cm^3	45 cm^3	130 cm^3
Condense drain	Semi-automatic	Semi-automatic (standard)	Automatic (SA)	
Weight	180 g	260 g	520 g	1040 g

Notes

Spacers and mounting brackets to be ordered separately, see page 3.2.300
For spare parts see from page 3.2.400

Standard dimensions

Type: **A14F**

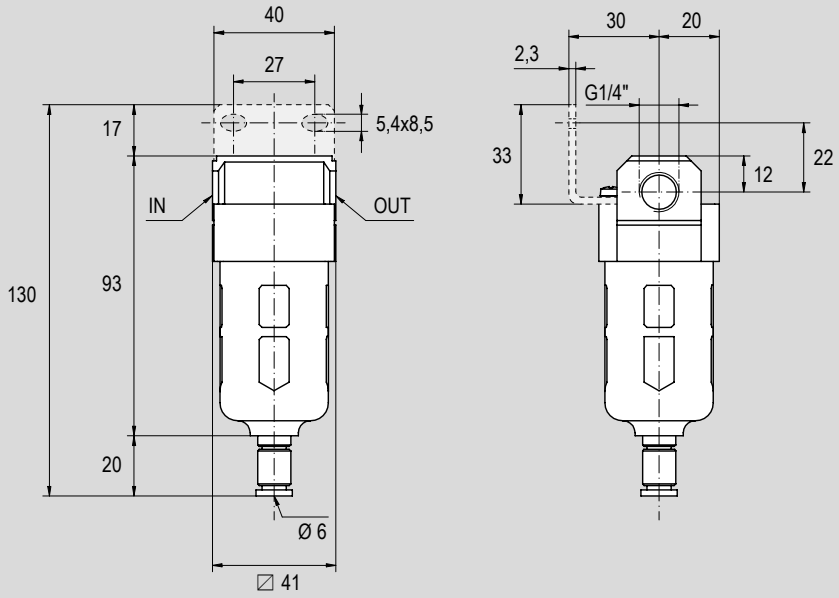

Size	Function	Symbol	Code	Item
1/4"	Filter		090102	A14F

Standard dimensions

Type: **A38F**

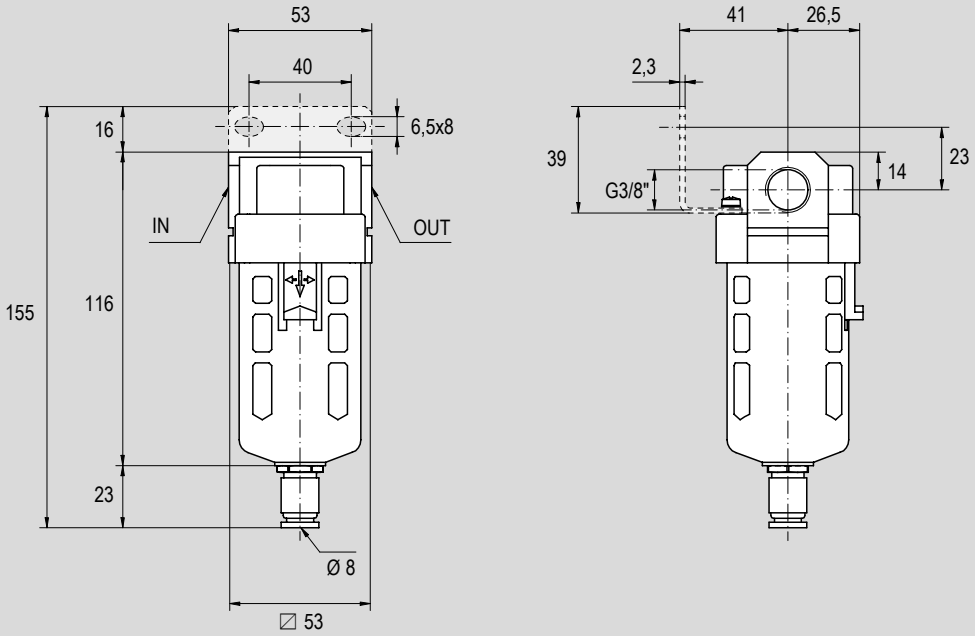

Size	Function	Symbol	Code	Item
3/8"	Filter		090107	A38F

Standard dimensions

Type: **A12F**

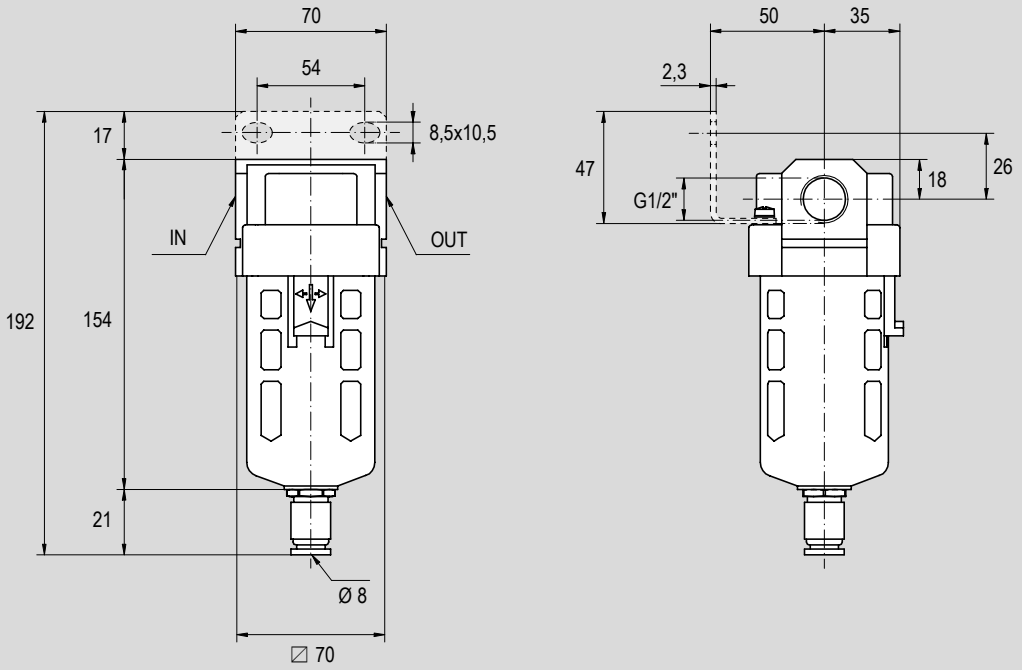

Size	Function	Symbol	Code	Item
1/2"	Filter		090112	A12F

Standard dimensions

Type: **A01F**

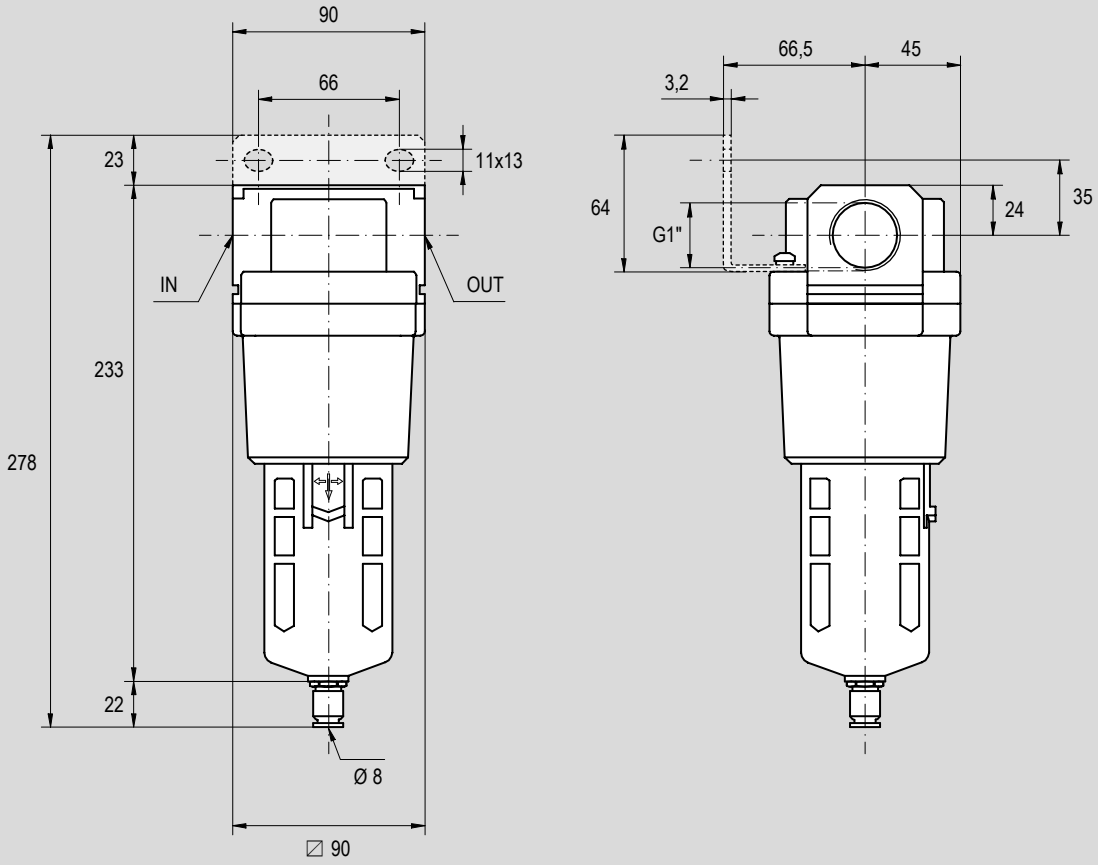

Size	Function	Symbol	Code	Item
1"	Filter		090117	A01F

Main features

Code	Item	Size	Function	Symbol
090268	A38FD	3/8"	Mist separator	
090269	A12FD	1/2"		
090270	A01FD	1"		



Technical data

Type	A38FD	A12FD	A01FD
Size	3/8"	1/2"	1"
Fluid	Compressed air		
Maximum inlet pressure	10 bar		
Temperature range	0°C ÷ +60°C		
Flow (at 6 bar)	800 Nl/min.	2000 Nl/min.	2500 Nl/min.
Filtering element	0.3 µm		
Cup capacity	20 cm^3	45 cm^3	130 cm^3
Condense drain	Semi-automatic (standard)	Automatic (SA)	
Weight	290 g	520 g	1050 g

Notes

Spacers and mounting brackets to be ordered separately, see page 3.2.300
For spare parts see from page 3.2.400

Standard dimensions

Type: **A38FD**

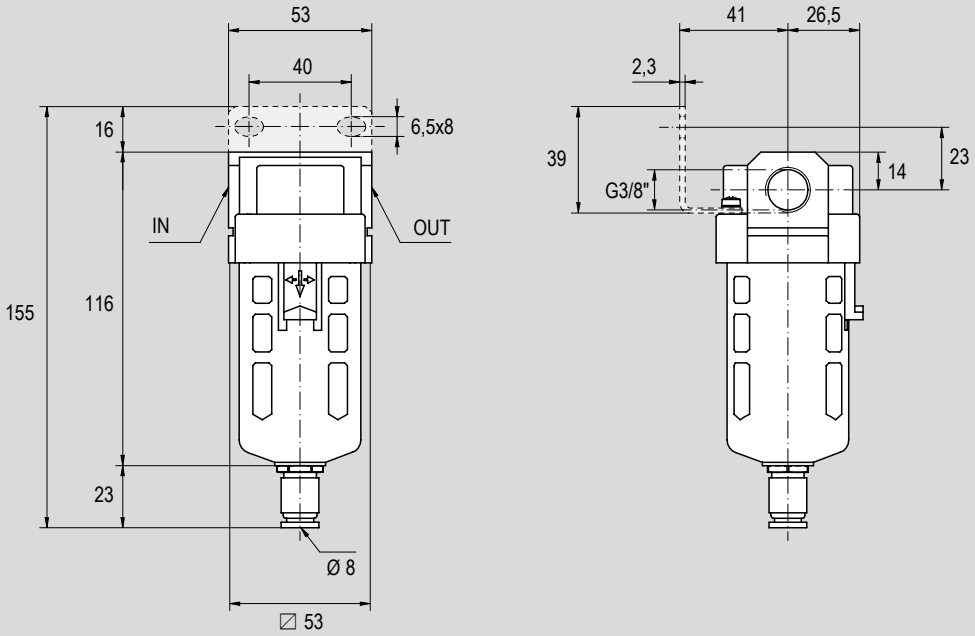

Size	Function	Symbol	Code	Item
3/8"	Mist separator		090268	A38FD

Standard dimensions

Type: **A12FD**

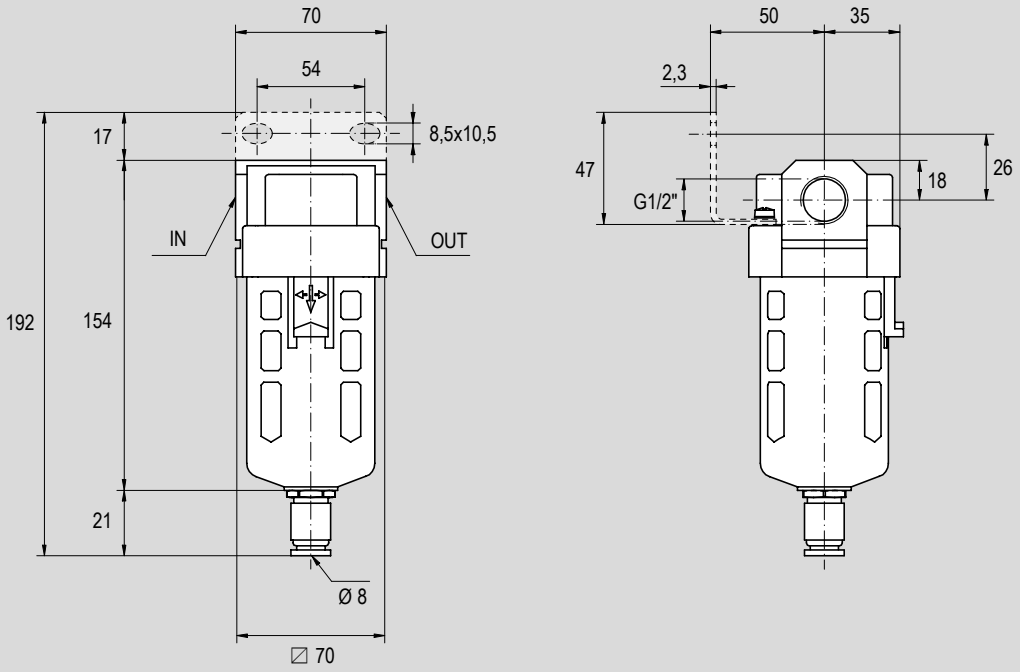

Size	Function	Symbol	Code	Item
1/2"	Mist separator		090269	A12FD

Standard dimensions

Type: **A01FD**

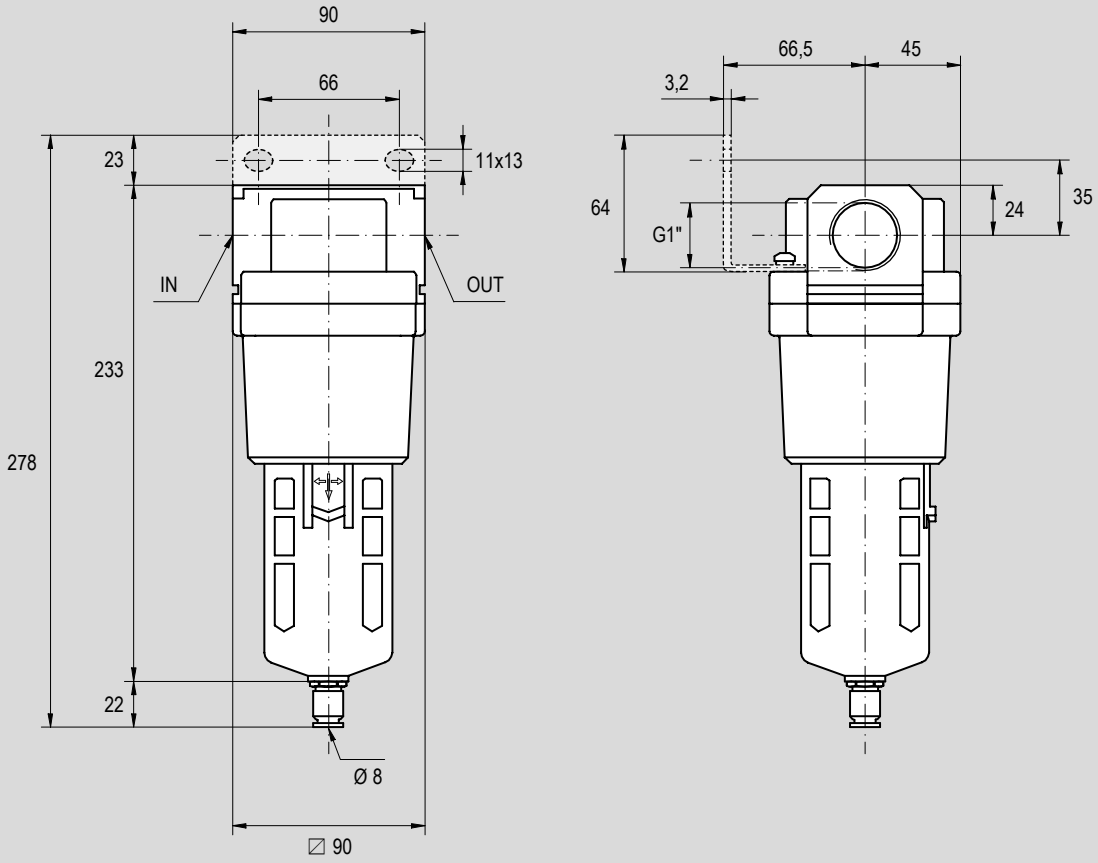

Size	Function	Symbol	Code	Item
1"	Mist separator		090270	A01FD

Main features

Code	Item	Size	Function	Symbol
090103	A14R	1/4"	Regulator	
090108	A38R	3/8"		
090113	A12R	1/2"		
090118	A01R	1"		



Technical data

Type	A14R	A38R	A12R	A01R
Size	1/4"	3/8"	1/2"	1"
Fluid	Compressed air			
Maximum inlet pressure	10 bar			
Pressure regulation range	0,5 ÷ 8,5 (standard)	0,5 ÷ 4 (04)		
Temperature range	0°C ÷ +60°C			
Flow (at 6 bar)	550 Nl/min.	2500 Nl/min.	6000 Nl/min.	8000 Nl/min.
Pressure regulator	Piston			
Overpressure relief	Relieving			
Gauges port	1/8"		1/4"	
Weight	270 g	410 g	840 g	1190 g

Notes

Spacers and mounting brackets to be ordered separately, see page 3.2.300
Pressure-gauges to be ordered separately, see from page 3.30.1

Standard dimensions

Type: **A14R**

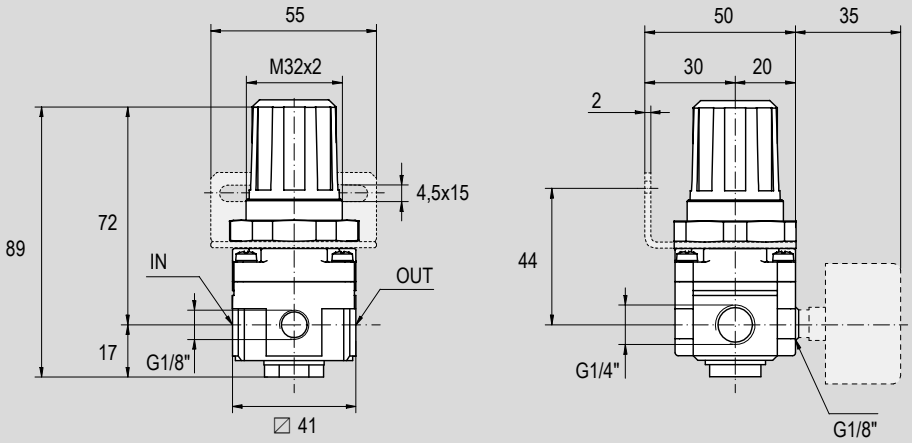

Size	Function	Symbol	Code	Item
1/4"	Regulator		090103	A14R

Standard dimensions

Type: **A38R**

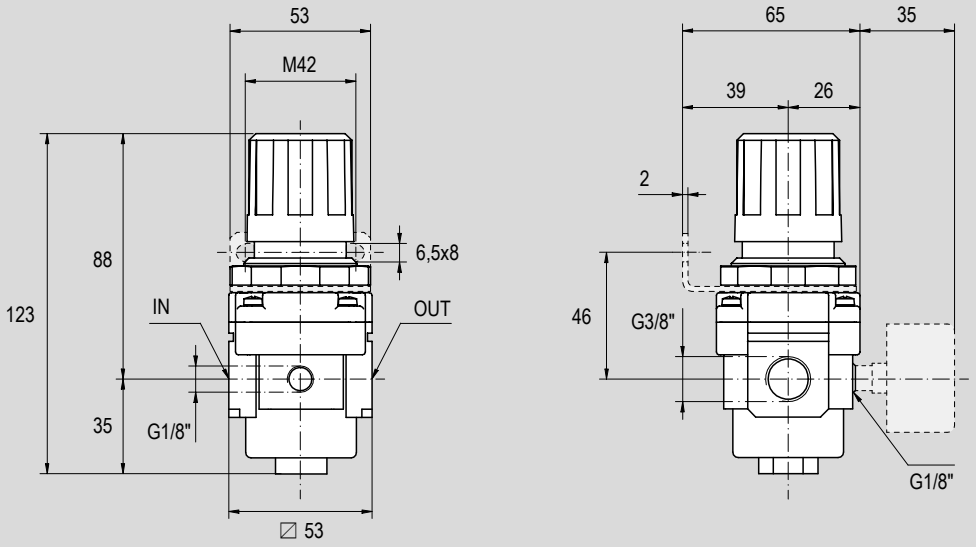

Size	Function	Symbol	Code	Item
3/8"	Regulator		090108	A38R

Standard dimensions

Type: **A12R**

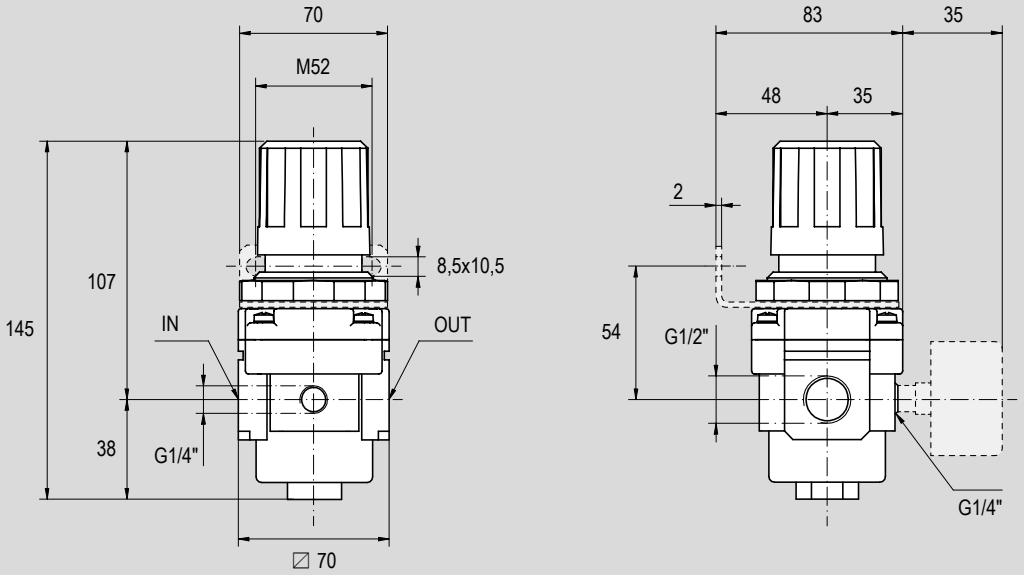

Size	Function	Symbol	Code	Item
1/2"	Regulator		090113	A12R

Standard dimensions

Type: **A01R**

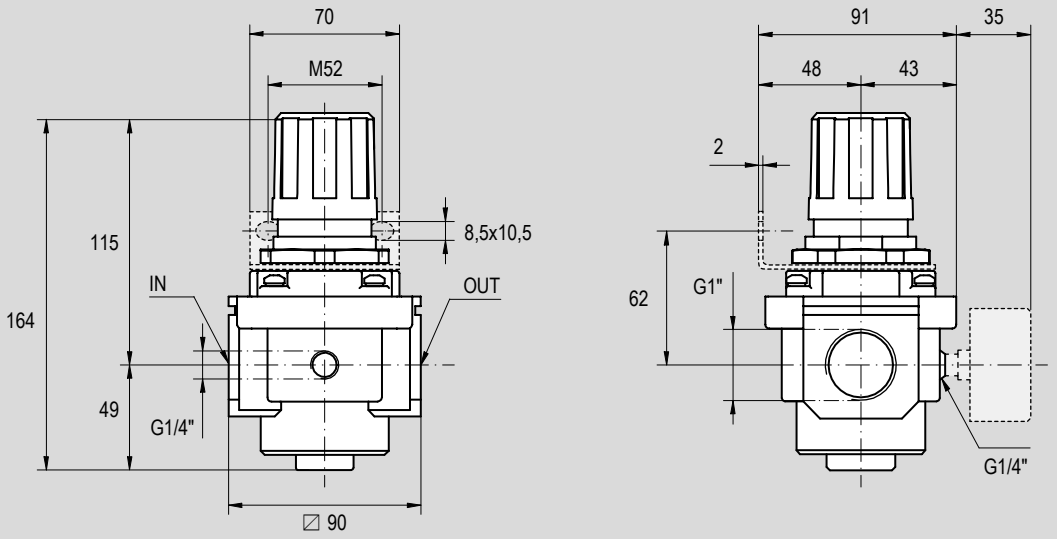

Size	Function	Symbol	Code	Item
1"	Regulator		090118	A01R

Main features

Code	Item	Size	Function	Symbol
090271	A18RP01-2	1/8"	Precision regulator	
090272	A18RP01-4			
090273	A18RP01-8			
090274	A14RP01-2	1/4"		
090275	A14RP01-4			
090276	A14RP01-8			
090277	A12RP01-2	1/2"		
090278	A12RP01-4			
090279	A12RP01-8			



Technical data

Type	A18RP01-2	A18RP01-4	A18RP01-8	A14RP01-2	A14RP01-4	A14RP01-8	A12RP01-2	A12RP01-4	A12RP01-8
Size	1/8"			1/4"			1/2"		
Fluid	Compressed air								
Maximum inlet pressure	10 bar								
Pressure regulation range	0,1 ÷ 2 bar	0,1 ÷ 4 bar	0,1 ÷ 8 bar	0,1 ÷ 2 bar	0,1 ÷ 4 bar	0,1 ÷ 8 bar	0,1 ÷ 2 bar	0,1 ÷ 4 bar	0,1 ÷ 8 bar
Temperature range	0°C ÷ +60°C								
Pressure regulator	Piston								
Overpressure relief	Relieving						Relieving + threaded exhaust (1/2")		
Gauges port	1/8"								
Weight	150			330			680		

Matching note

Size 1/8" can be mounted in combination with modular component size 1/4" only.
Size 1/4" can be mounted in combination with modular component size 3/8" only.
Size 1/2" can be mounted in combination with modular component size 1/2" ony.

Notes

Spacers and mounting brackets to be ordered separately, see page 3.2.300
Pressure-gauges to be ordered separately, see from page 3.30.1

Standard dimensions

Type: **A18RP**

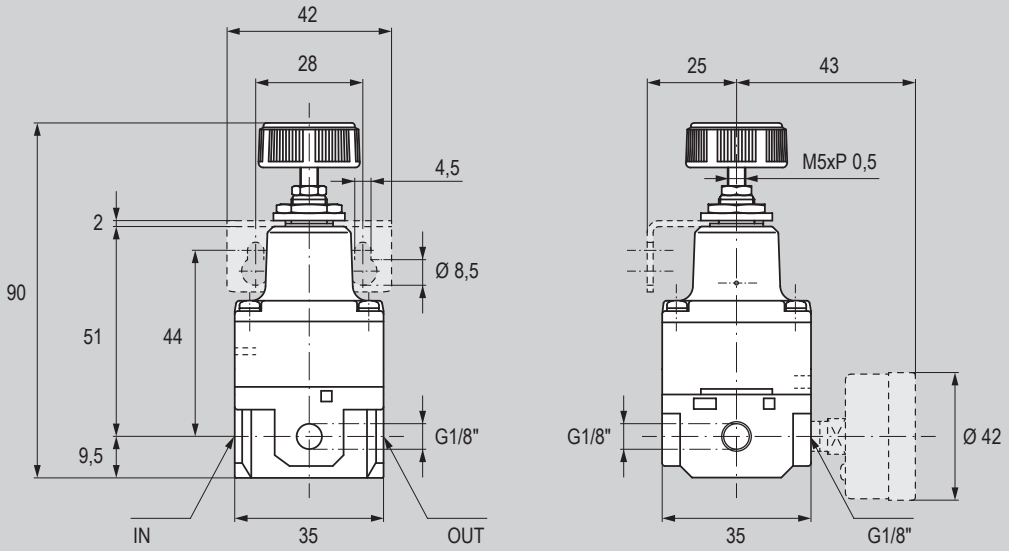

Size	Function	Pressure regulation range	Symbol	Code	Item
1/8"	Precision regulator	0,1 ÷ 2 bar		090271	A18RP01-2
		0,1 ÷ 4 bar		090272	A18RP01-4
		0,1 ÷ 8 bar		090273	A18RP01-8

Standard dimensions

Type: **A14RP**

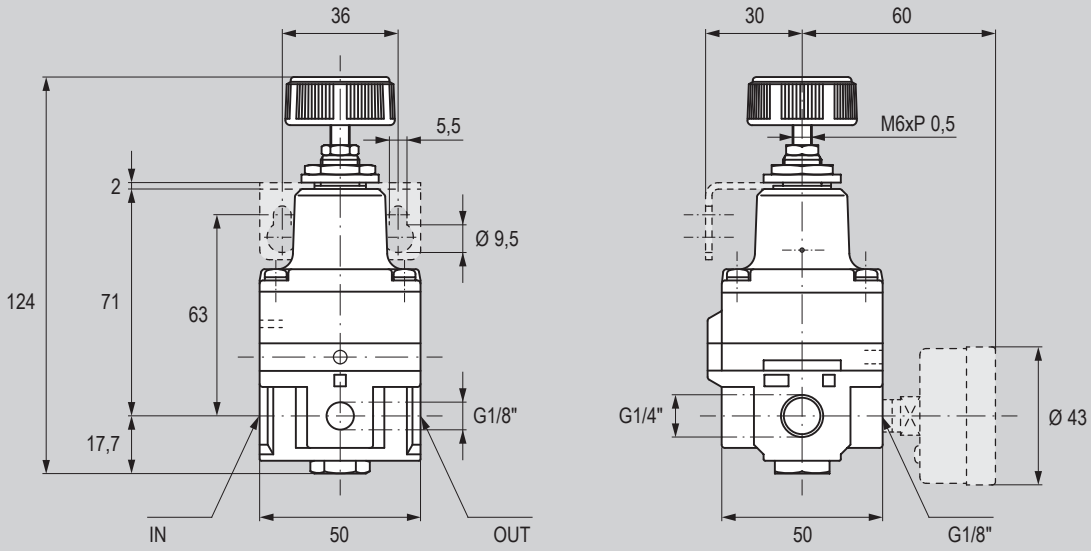

Size	Function	Pressure regulation range	Symbol	Code	Item
1/4"	Precision regulator	0,1 ÷ 2 bar		090274	A14RP01-2
		0,1 ÷ 4 bar		090275	A14RP01-4
		0,1 ÷ 8 bar		090276	A14RP01-8

Standard dimensions

Type: **A12RP**

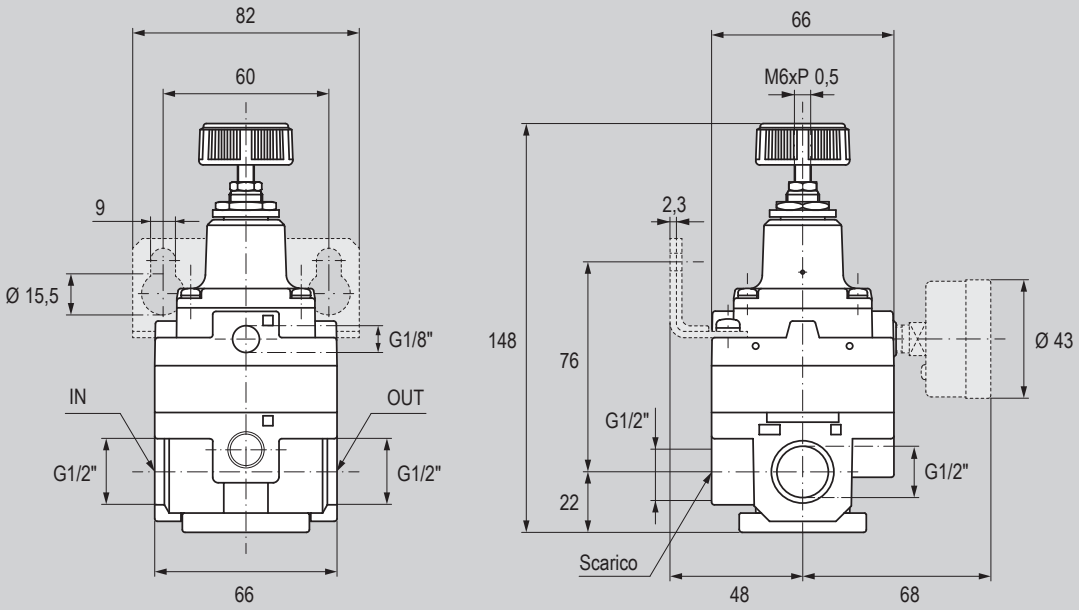

Size	Function	Pressure regulation range	Symbol	Code	Item
1/2"	Precision regulator	0,1 ÷ 2 bar		090277	A12RP01-2
		0,1 ÷ 4 bar		090278	A12RP01-4
		0,1 ÷ 8 bar		090279	A12RP01-8

Main features

Code	Item	Size	Function	Symbol
090104	A14L	1/4"	Lubricator	
090109	A38L	3/8"		
090114	A12L	1/2"		
090119	A01L	1"		



Technical data

Type	A14L	A38L	A12L	A01L
Size	1/4"	3/8"	1/2"	1"
Fluid	Compressed air			
Maximum inlet pressure	10 bar			
Temperature range	0°C ÷ +60°C			
Flow (at 6 bar)	800 Nl/min.	1700 Nl/min.	5000 Nl/min.	7000 Nl/min.
Cup capacity	25 cm^3	50 cm^3	130 cm^3	
Suggested lubricant	With viscosity ISO VG 32 compliant to ISO 3448 standards			
Weight	220 g	300 g	560 g	1080 g

Notes

Spacers and mounting brackets to be ordered separately, see page 3.2.300

For spare parts see from page 3.2.400

Standard dimensions

Type: **A14L**

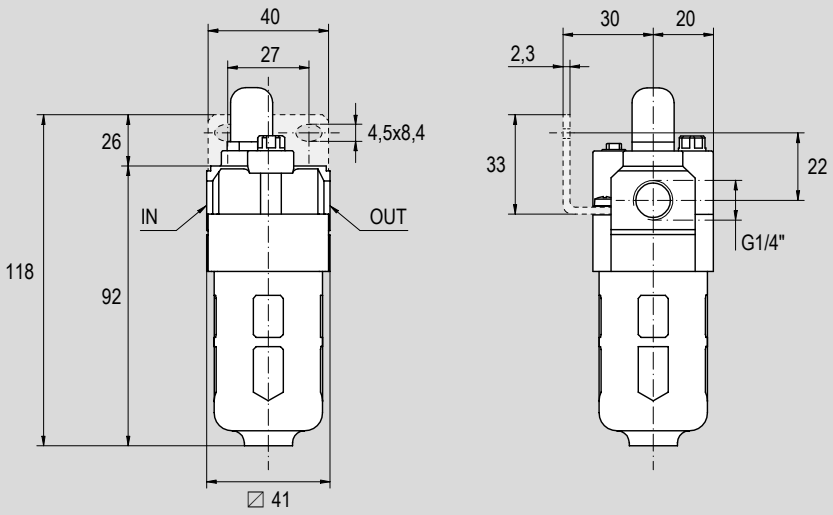

Size	Function	Symbol	Code	Item
1/4"	Lubricator		090104	A14L

Standard dimensions

Type: **A38L**

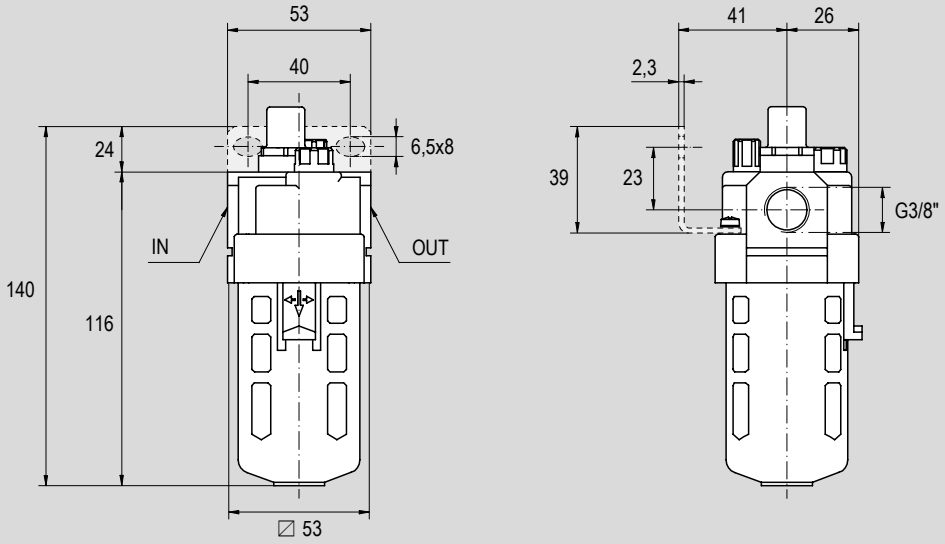

Size	Function	Symbol	Code	Item
3/8"	Lubricator		090109	A38L

Standard dimensions

Type: **A12L**

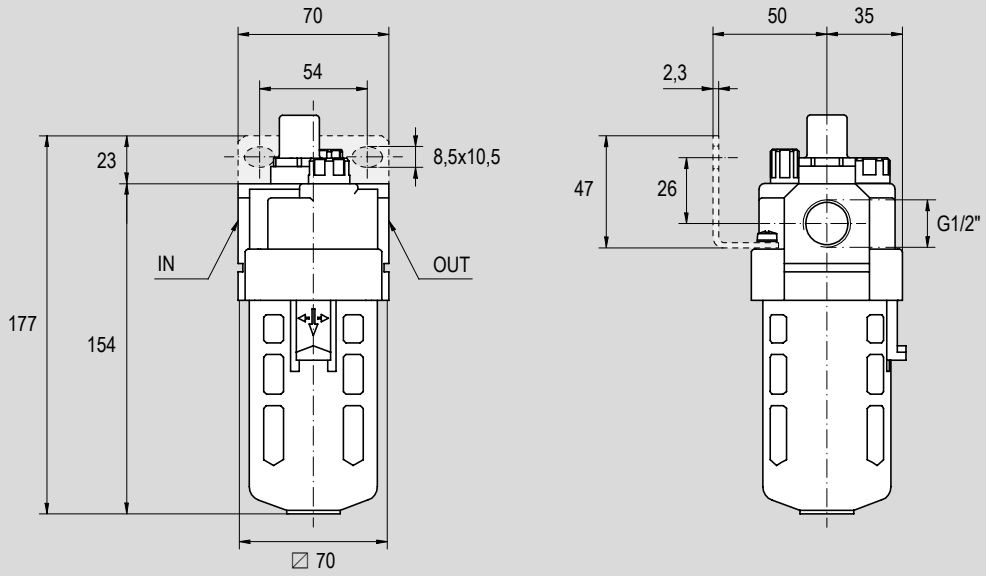

Size	Function	Symbol	Code	Item
1/2"	Lubricator		090114	A12L

Standard dimensions

Type: **A01L**

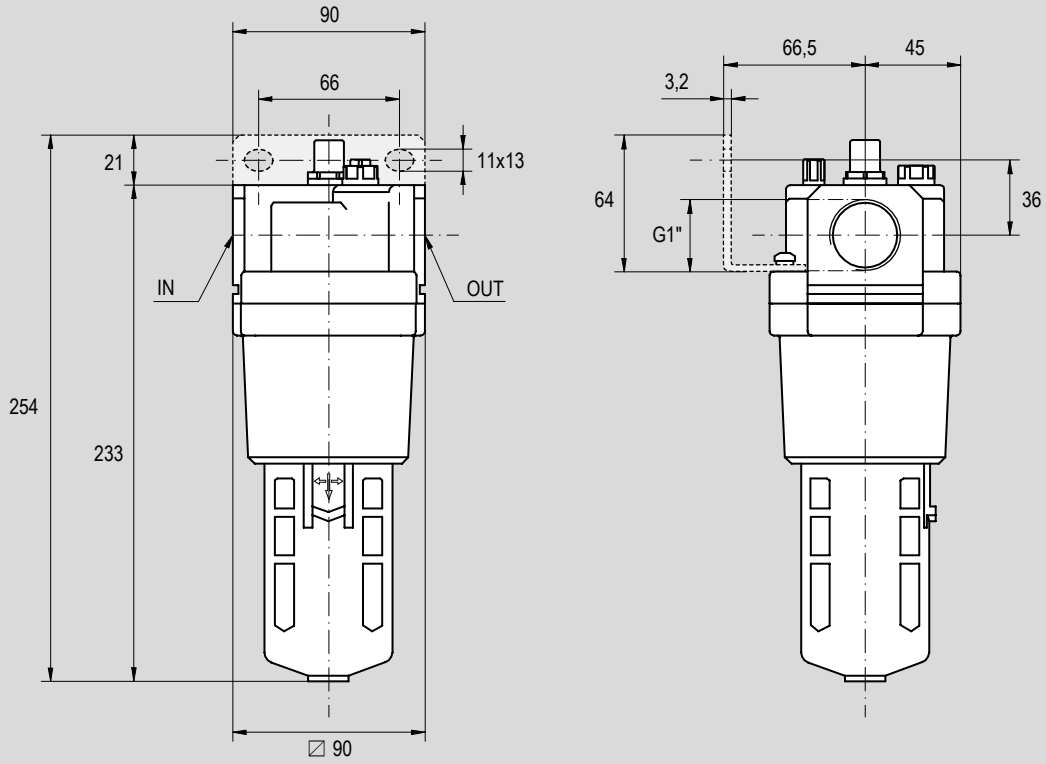

Size	Function	Symbol	Code	Item
1"	Lubricator		090119	A01L

Main features

Code	Item	Size	Function	Symbol
090280	A14LG	1/4"	Lubricators with large capacity cup	



Technical data

Type	A14LG
Size	1/4"
Fluid	Compressed air
Maximum inlet pressure	10 bar
Temperature range	0°C ÷ +60°C
Flow (at 6 bar)	800 Nl/min.
Cup capacity	85 cm^3
Suggested lubricant	With viscosity ISO VG 32 compliant to ISO 3448 standards

Notes

Spacers and mounting brackets to be ordered separately, see page 3.2.300

Standard dimensions

Type: **A14LG**

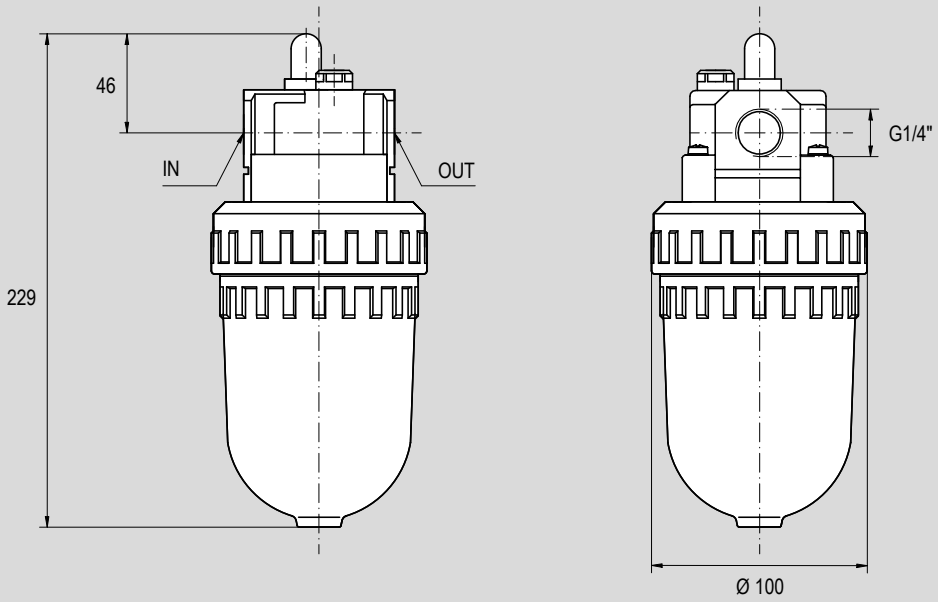

Size	Function	Symbol	Code	Item
1/4"	Lubricator with large capacity cup		090280	A14LG

Main features

Code	Item	Size	Function	Symbol
090101	A14FRR	1/4"	Filter-regulator	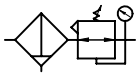
090106	A38FRR	3/8"		
090111	A12FRR	1/2"		
090116	A01FRR	1"		



Technical data

Type	A14FRR	A38FRR	A12FRR	A01FRR
Size	1/4"	3/8"	1/2"	1"
Fluid	Compressed air			
Maximum inlet pressure	10 bar			
Pressure regulation range	0,5 ÷ 8,5 (standard)	0,5 ÷ 4 (04)		
Temperature range	0°C ÷ +60°C			
Flow (at 6 bar)	750 Nl/min.	2000 Nl/min.	4000 Nl/min.	5500 Nl/min.
Filtering element	25 µm (standard)	5 µm (5)		
Cup capacity	15 cm^3	20 cm^3	45 cm^3	130 cm^3
Condense drain	Semi-automatic	Semi-automatic (standard)	Automatic (SA)	
Pressure regulator	Piston			
Overpressure relief	Relieving M5			
Gauges port	1/8"		1/4"	
Weight	300 g	530 g	1150 g	1780 g

Notes

Spacers and mounting brackets to be ordered separately, see page 3.2.300
Pressure-gauges to be ordered separately, see from page 3.30.1
For spare parts see from page 3.2.400

Standard dimensions

Type: **A14FRR**

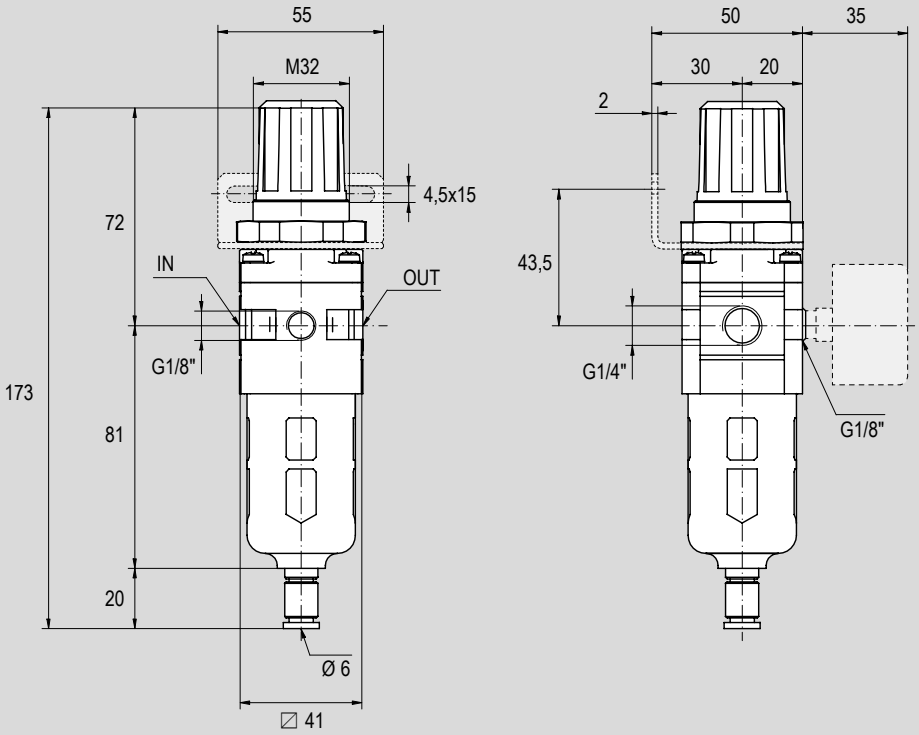

Size	Function	Symbol	Code	Item
1/4"	Filter-regulator	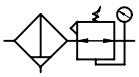	090101	A14FRR

Standard dimensions

Type: **A38FRR**

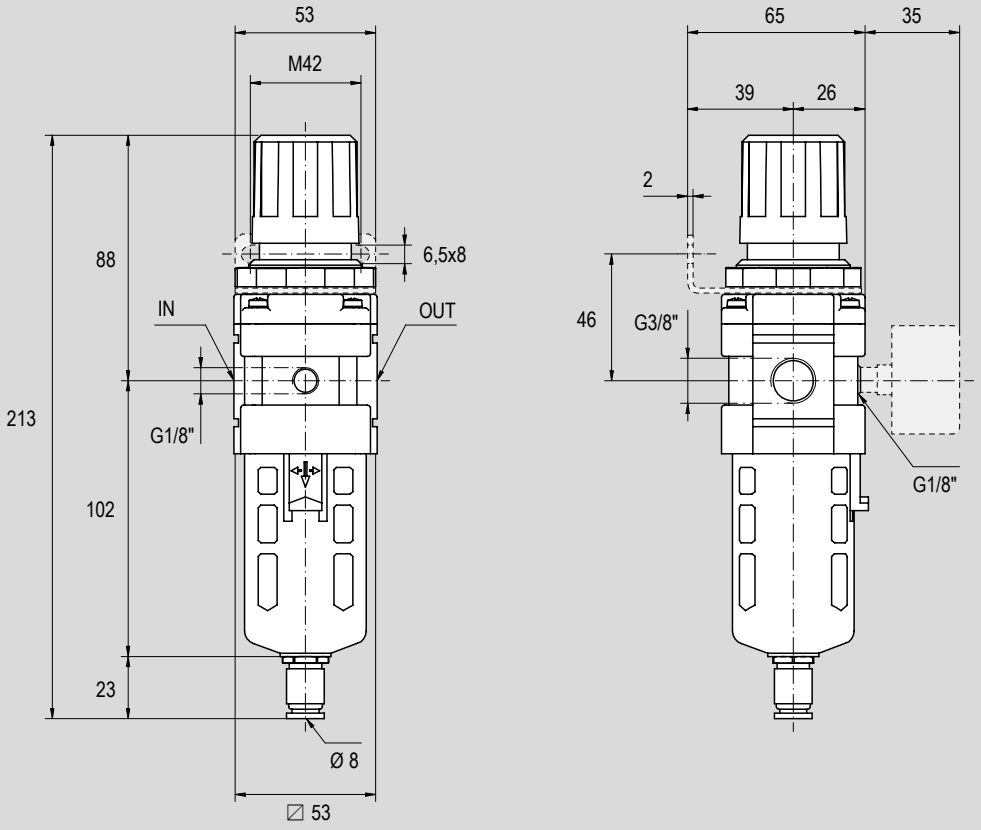

Size	Function	Symbol	Code	Item
3/8"	Filter-regulator	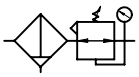	090106	A38FRR

Standard dimensions

Type: **A12FRR**

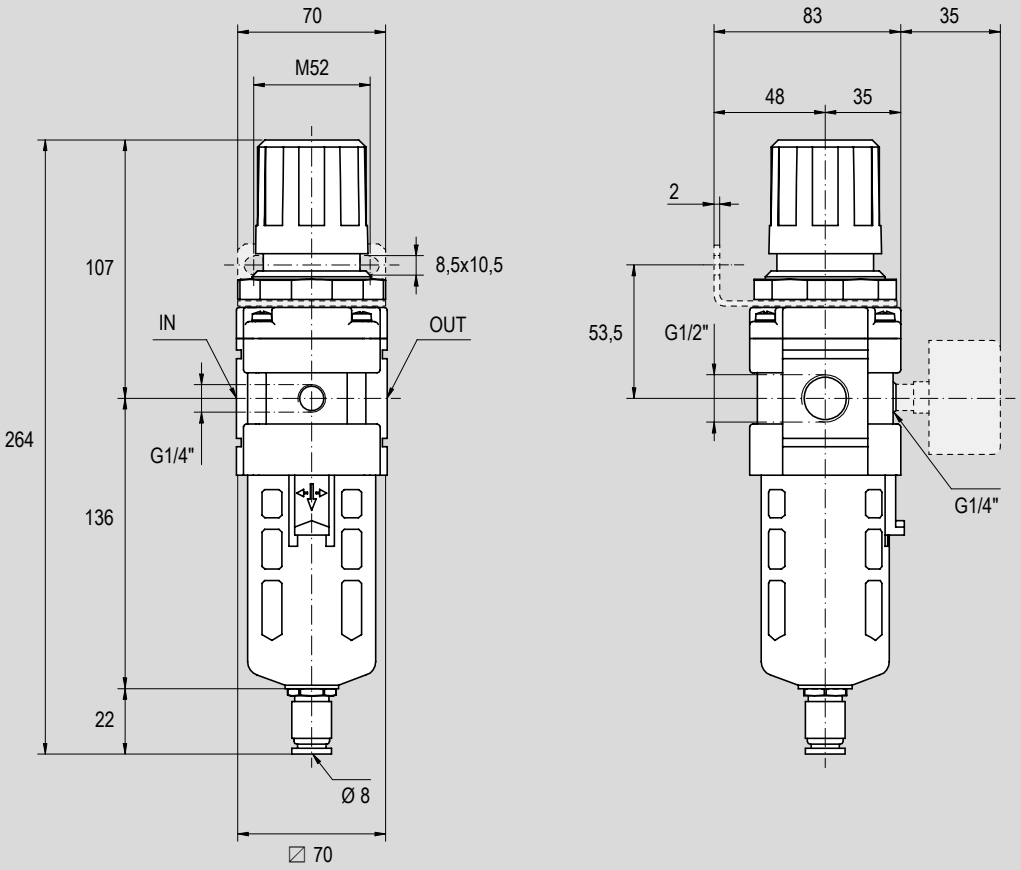

Size	Function	Symbol	Code	Item
1/2"	Filter-regulator	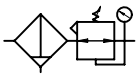	090111	A12FRR

Standard dimensions

Type: **A01FRR**

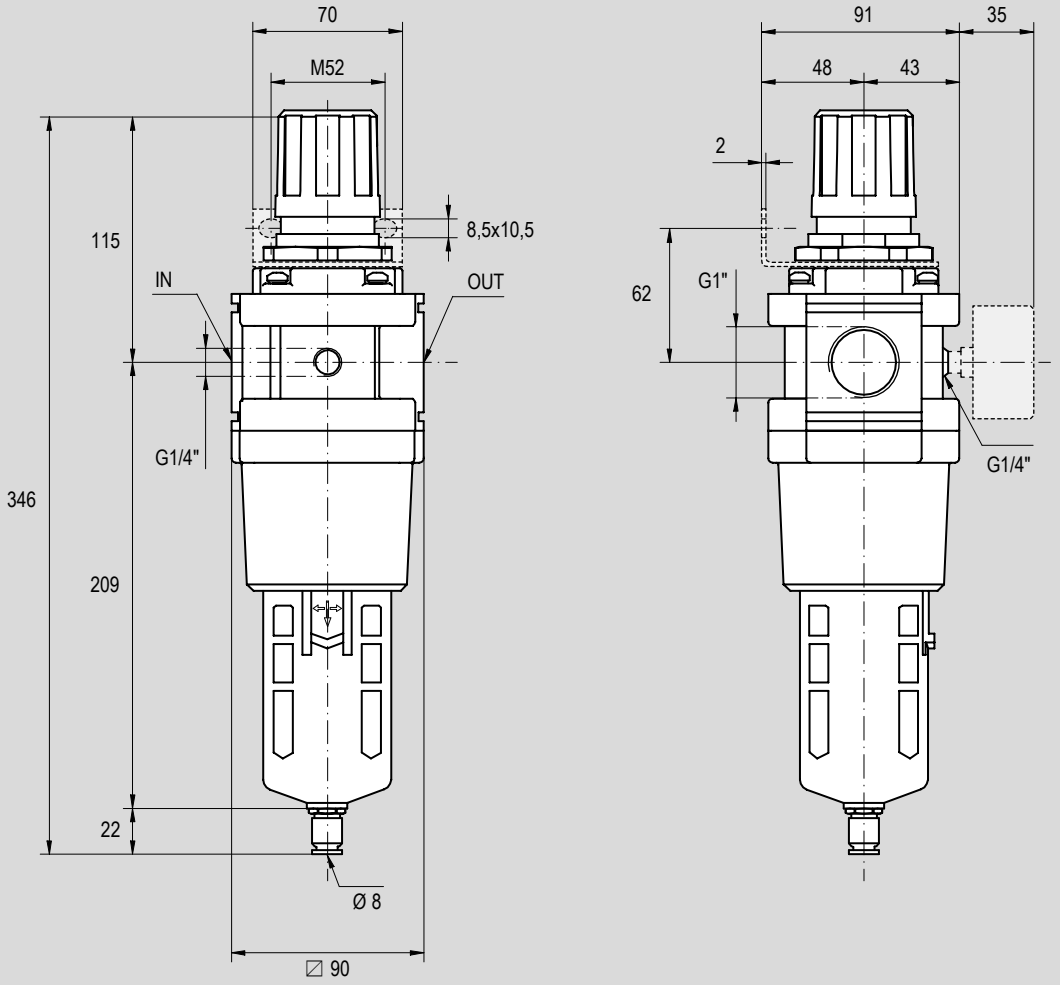

Size	Function	Symbol	Code	Item
1"	Filter-regulator	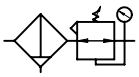	090116	A01FRR

Main features

Code	Item	Size	Function	Symbol
090100	A14FRRL	1/4"	Filter-regulator + lubricator	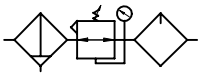
090105	A38FRRL	3/8"		
090110	A12FRRL	1/2"		
090115	A01FRRL	1"		



Technical data

Type		A14FRRL	A38FRRL	A12FRRL	A01FRRL
Size		1/4"	3/8"	1/2"	1"
Fluid		Compressed air			
Maximum inlet pressure		0 ÷ 10 bar			
Pressure regulation range		0,5 ÷ 8,5 (standard)	0,5 ÷ 4 (04)		
Temperature range		0°C ÷ +60°C			
Flow (at 6 bar)		500 Nl/min.	1700 Nl/min.	3000 Nl/min.	4000 Nl/min.
Filtering element		25 µm (standard)	5 µm (5)		
Cup capacity	filter	15 cm^3	20 cm^3	45 cm^3	130 cm^3
	lubricator	25 cm^3	50 cm^3	130 cm^3	
Condense drain		Semi-automatic	Semi-automatic	Automatic (SA)	
Pressure regulator		Piston			
Overpressure relief		Relieving M5			
Gauges port		1/8"		1/4"	
Suggested lubricant		With viscosity ISO VG 32 compliant to ISO 3448 standards			
Weight		500 g	950 g	1980 g	3280 g

Notes

Spacer with "T" type bracket supplied as standard. Other spacers and mounting brackets can be ordered separately, see page 3.2.300
Pressure-gauges to be ordered separately, see from page 3.30.1
For spare parts see from page 3.2.400

Standard dimensions

Type: **A14FRRL**

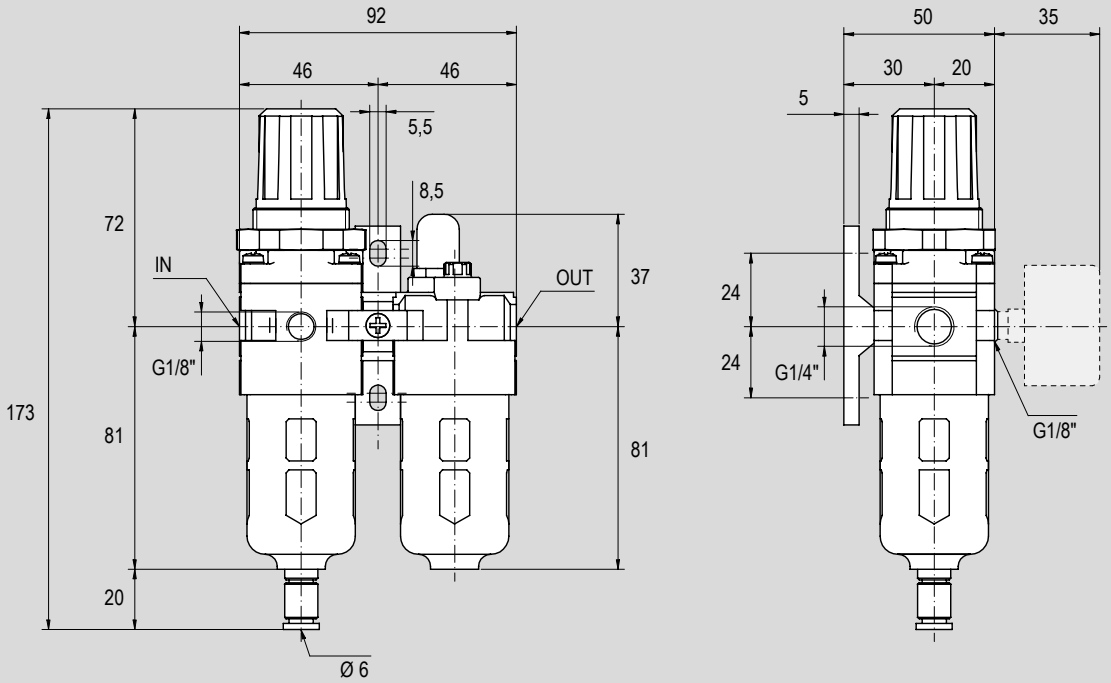

Size	Function	Symbol	Code	Item
1/4"	Filter-regulator + lubricator	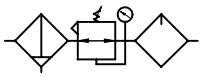	090100	A14FRRL

Standard dimensions

Type: **A38FRRL**

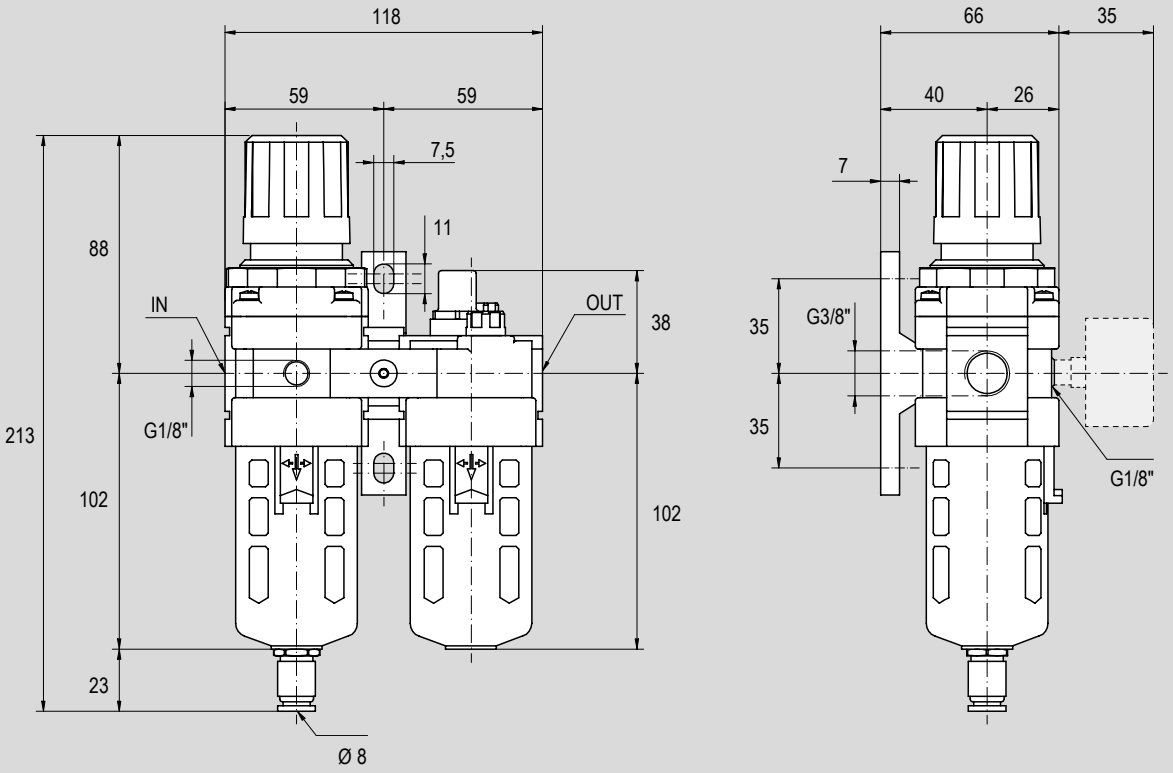

Size	Function	Symbol	Code	Item
3/8"	Filter-regulator + lubricator	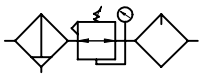	090105	A38FRRL

Standard dimensions

Type: **A12FRRL**

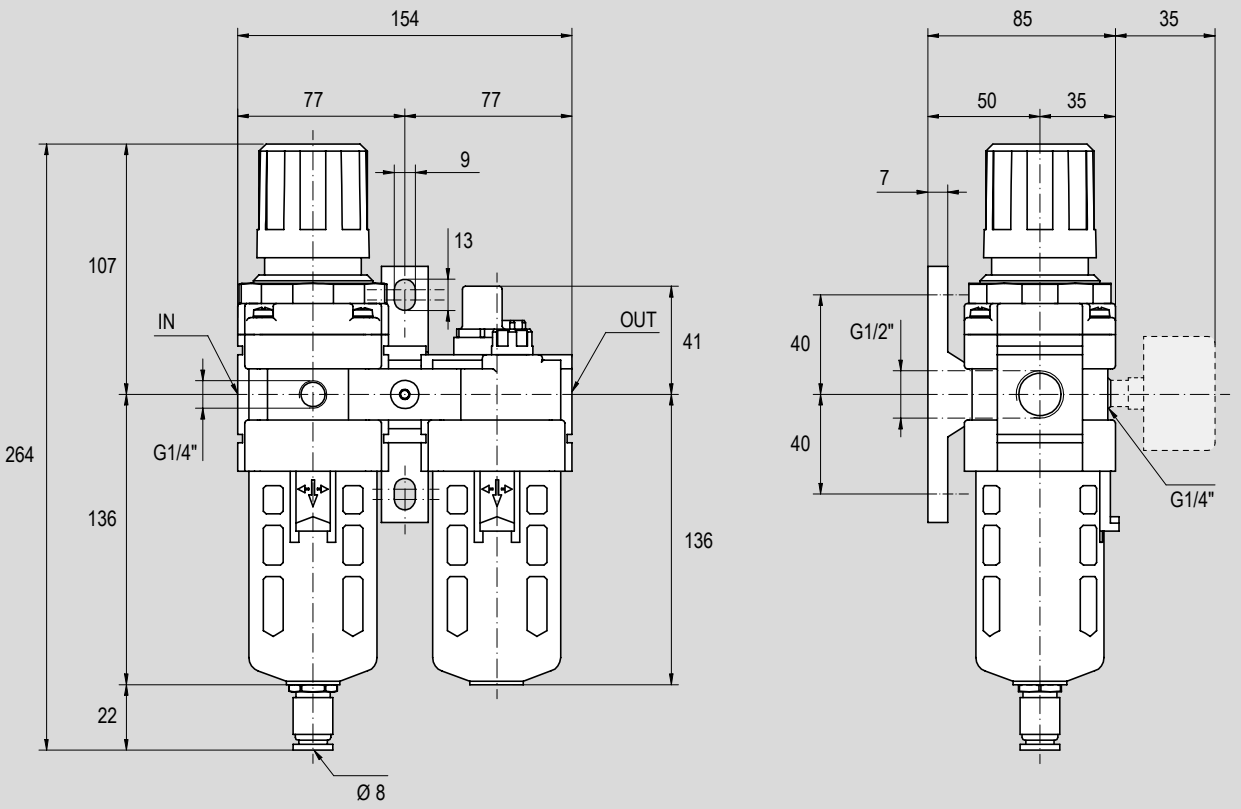

Size	Function	Symbol	Code	Item
1/2"	Filter-regulator + lubricator	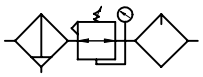	090110	A12FRRL

Standard dimensions

Type: **A01FRRL**

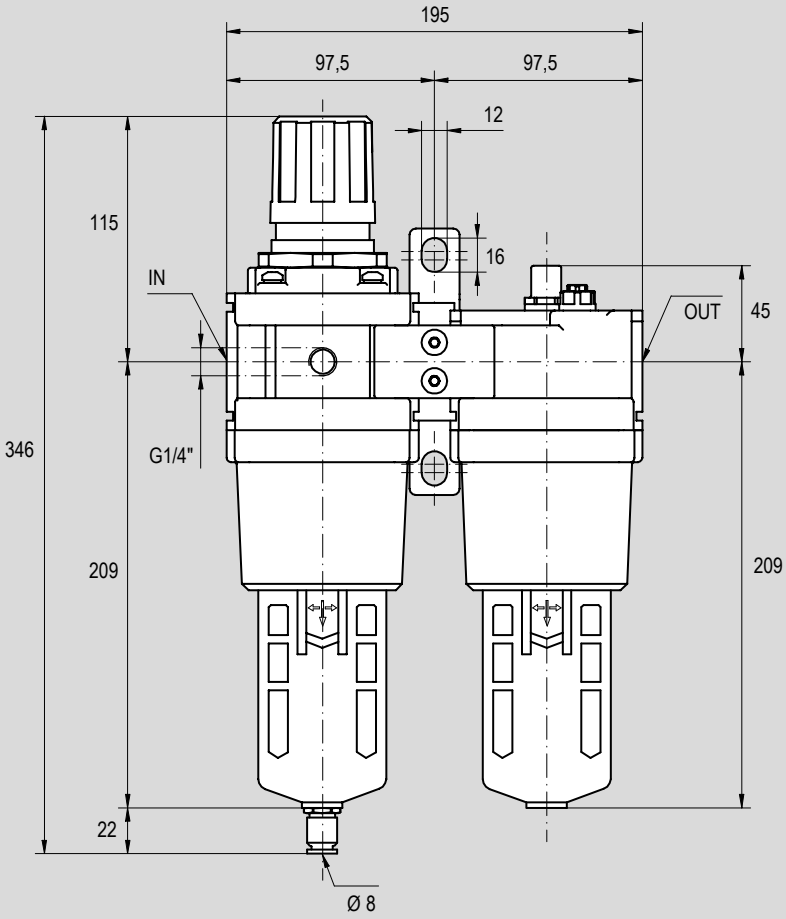

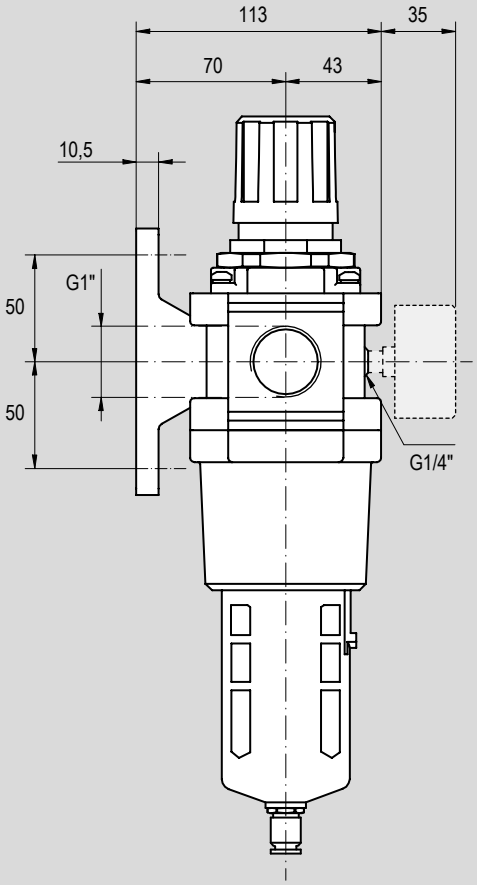

Size	Function	Symbol	Code	Item
1"	Filter-regulator + lubricator	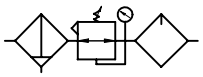	090115	A01FRRL

Main features

Code	Item	Size	Function	Symbol
090231	AVP14E	1/4"	Soft-start solenoid operated valves	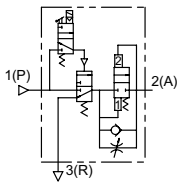
090232	AVP38E	3/8"		
090233	AVP12E	1/2"		



Technical data

Type		AVP14E	AVP38E	AVP12E
Size		1/4"	3/8"	1/2"
Fluid		Compressed air		
Maximum inlet pressure		15 bar		
Minumum piloting pressure		0,2 bar		
Pressure range		0,3 ÷ 10 bar		
Temperature range		0°C ÷ +60°C		
Section	1 (P) → 2 (A)	20 mm^2	37 mm^2	61 mm^2
	2 (A) → 3 (R)	24 mm^2	49 mm^2	76 mm^2
Gauges port		1/8"		
Plunger		9 mm		
Manual override		Spring return		

Notes

Spacers and mounting brackets to be ordered separately, see page 3.2.300
Pressure-gauges to be ordered separately, see from page 3.30.1
Coils and connectors to be ordered separately, see page 2.315.1

Operating conditions

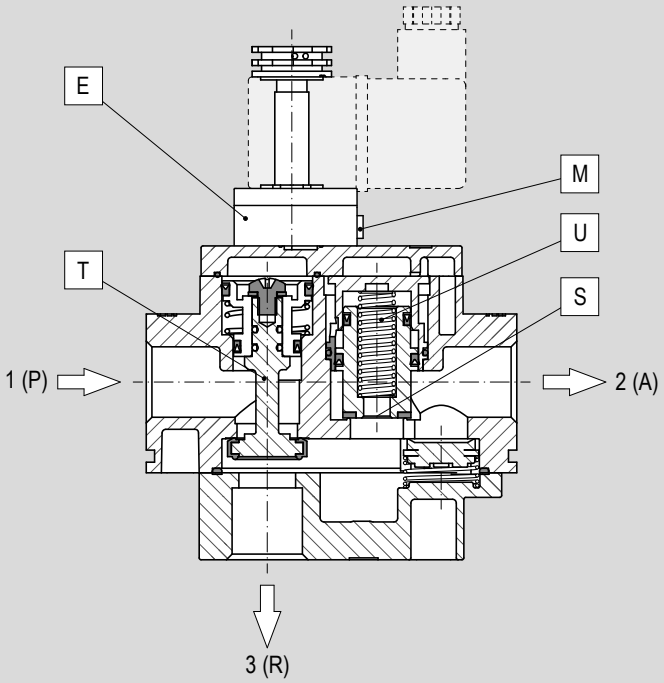

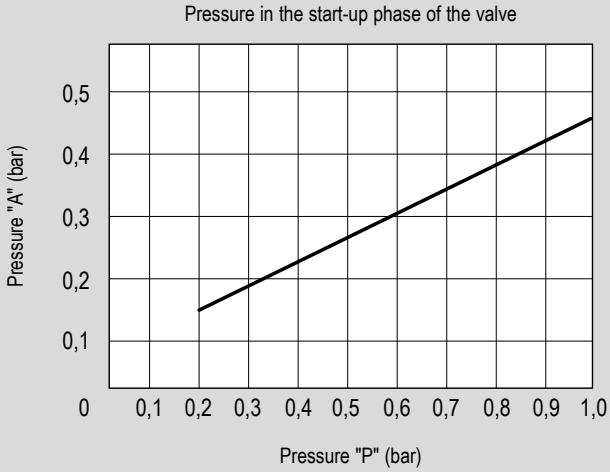

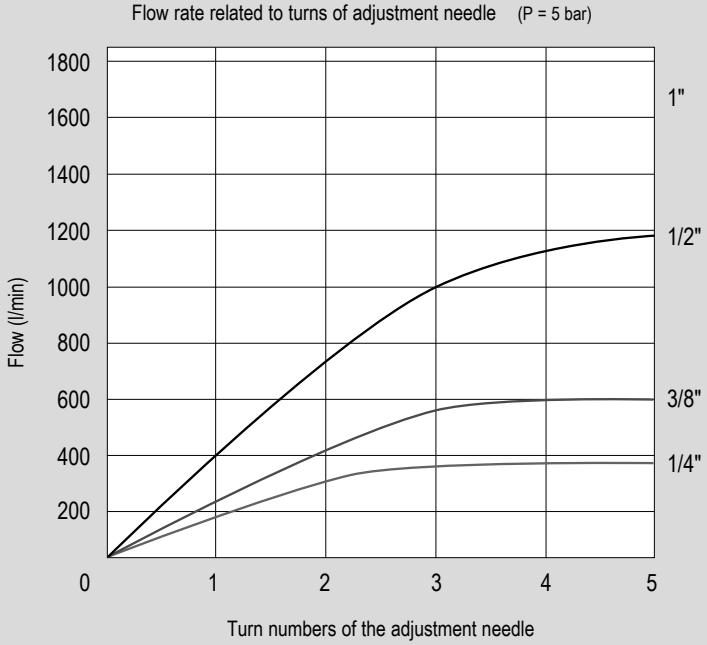

Start-up phase
By actuating the electro-pilot E, or pushing the manual override M, air will push the poppet T down opening this way the main power valve and at the same time, closing the exhaust (R). Air from inlet (P) will go through the regulation needle S and then to the outlet (A).
Opening speed can be adjustable by the side screw.

Switching and working phase
In the moment the pressure difference between (A) and (P) is (A) ≥ ½ (P), the poppet U fully open and outlet pressure (A) rapidly increase until equalize inlet pressure in (P). Soft-start valve will not represent any obstacle for the air-flow going through it.

Closing and exhausting phase
By deactivating electro-pilot E, or releasing the manual override M, the poppet T will reposition stopping the air from inlet (P) and contemporary exhaust the downstream air in the circuit from the exhaust (R).

Standard dimensions

Type: **AVP..E**

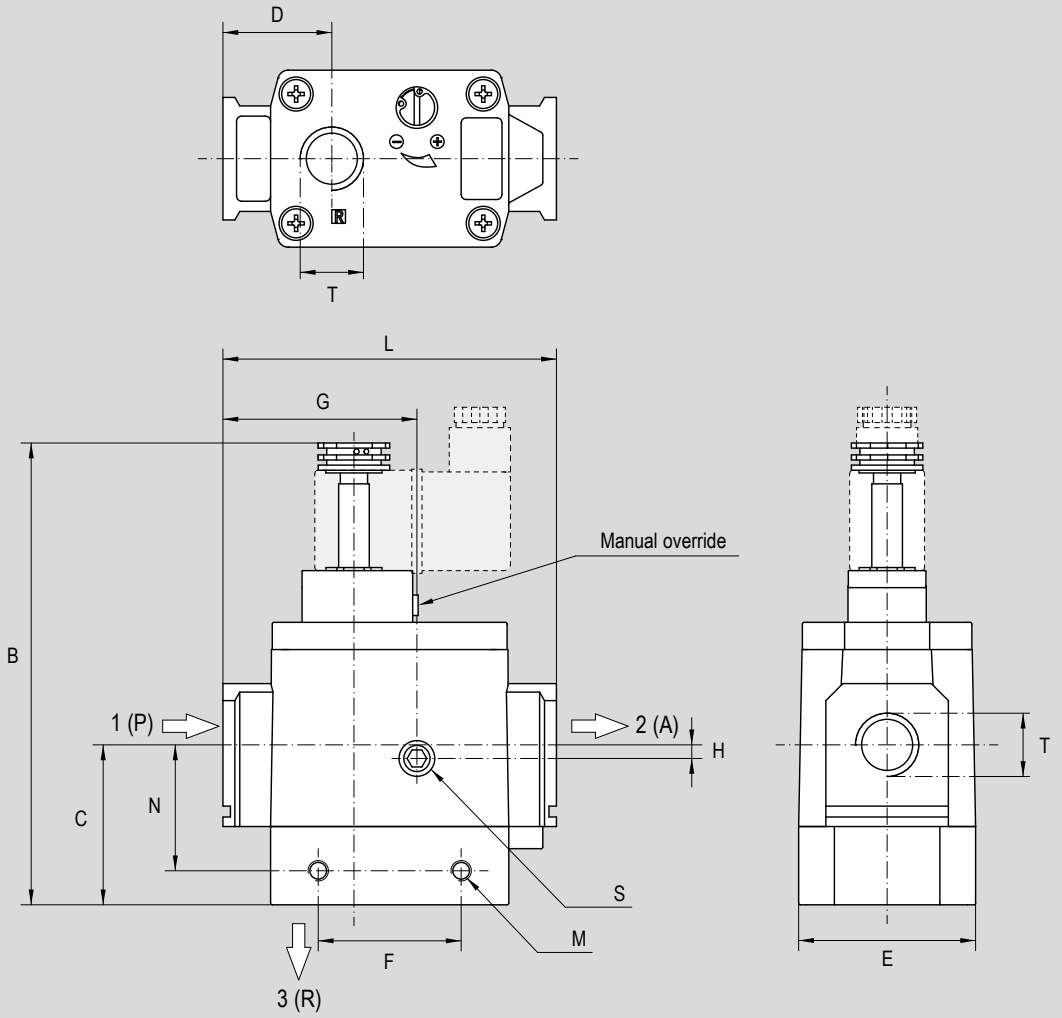

Item	Code	Size	B	C	D	E	F	G	H	L	M	N	S	T
AVP14E	090231	1/4"	114	31	22	40	29	38	0	66	M4	23,5	G1/8"	G1/4"
AVP38E	090232	3/8"	131	36	24	48	28	43	2	76	M5	27,5	G1/8"	G3/8"
AVP12E	090233	1/2"	146	47	32	52	42	57	3	98	M6	42	G1/8"	G1/2"

Modular units
Soft-start air operated valves, 1/4" ÷ 1/2"

Main features

Code	Item	Size	Function	Symbol
090247	AVP14P	1/4"	Soft-start air operated valves	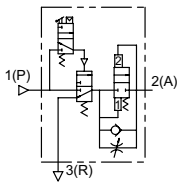
090248	AVP38P	3/8"		
090249	AVP12P	1/2"		



Technical data

Type		AVP14P	AVP38P	AVP12P
Size		1/4"	3/8"	1/2"
Fluid		Compressed air		
Maximum inlet pressure		15 bar		
Minumum piloting pressure		0,2 bar		
Pressure range		0,3 ÷ 10 bar		
Temperature range		0°C ÷ +60°C		
Section	1 (P) → 2 (A)	20 mm^2	37 mm^2	61 mm^2
	2 (A) → 3 (R)	24 mm^2	49 mm^2	76 mm^2
Gauges port		1/8"		

Notes

Spacers and mounting brackets to be ordered separately, see page 3.2.300

Operating conditions

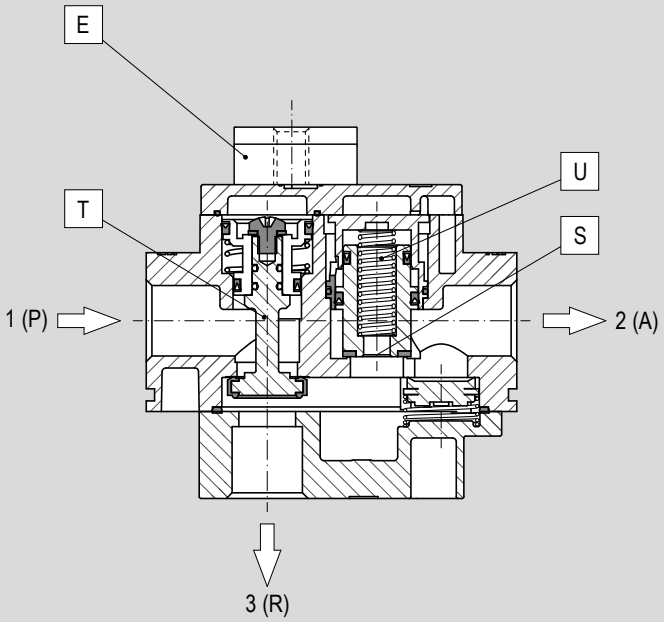

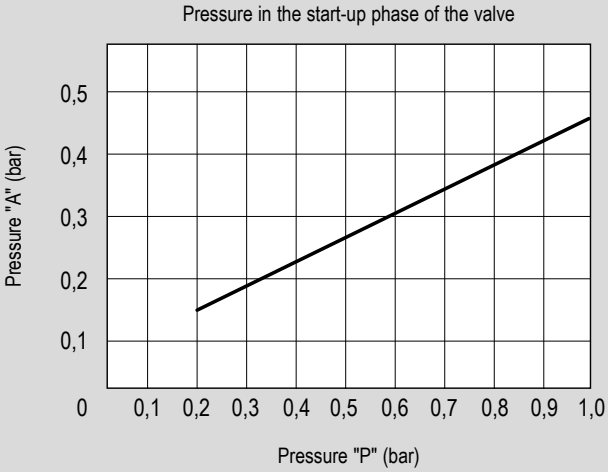

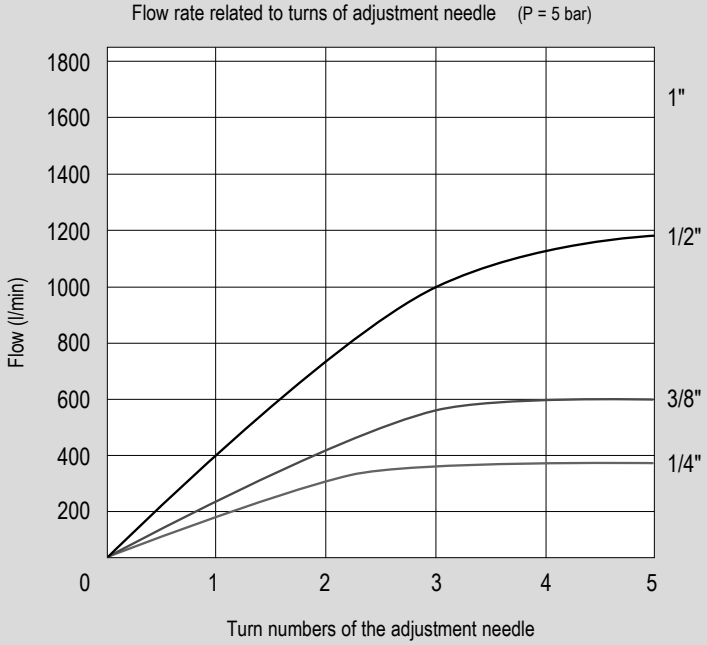

Start-up phase
By actuating the pneumatic-pilot E air will push the poppet T down opening this way the main power valve and at the same time, closing the exhaust (R). Air from inlet (P) will go through the regulation needle S and then to the outlet (A).
Opening speed can be adjustable by the side screw.

Switching and working phase
In the moment the pressure difference between (A) and (P) is (A) ≥ ½ (P), the poppet U fully open and outlet pressure (A) rapidly increase until equalize inlet pressure in (P). Soft-start valve will not represent any obstacle for the air-flow going through it.

Closing and exhausting phase
By deactivating pneumatic-pilot E the poppet T will reposition stopping the air from inlet (P) and contemporary exhaust the downstream air in the circuit from the exhaust (R).

Standard dimensions

Type: **AVP..P**

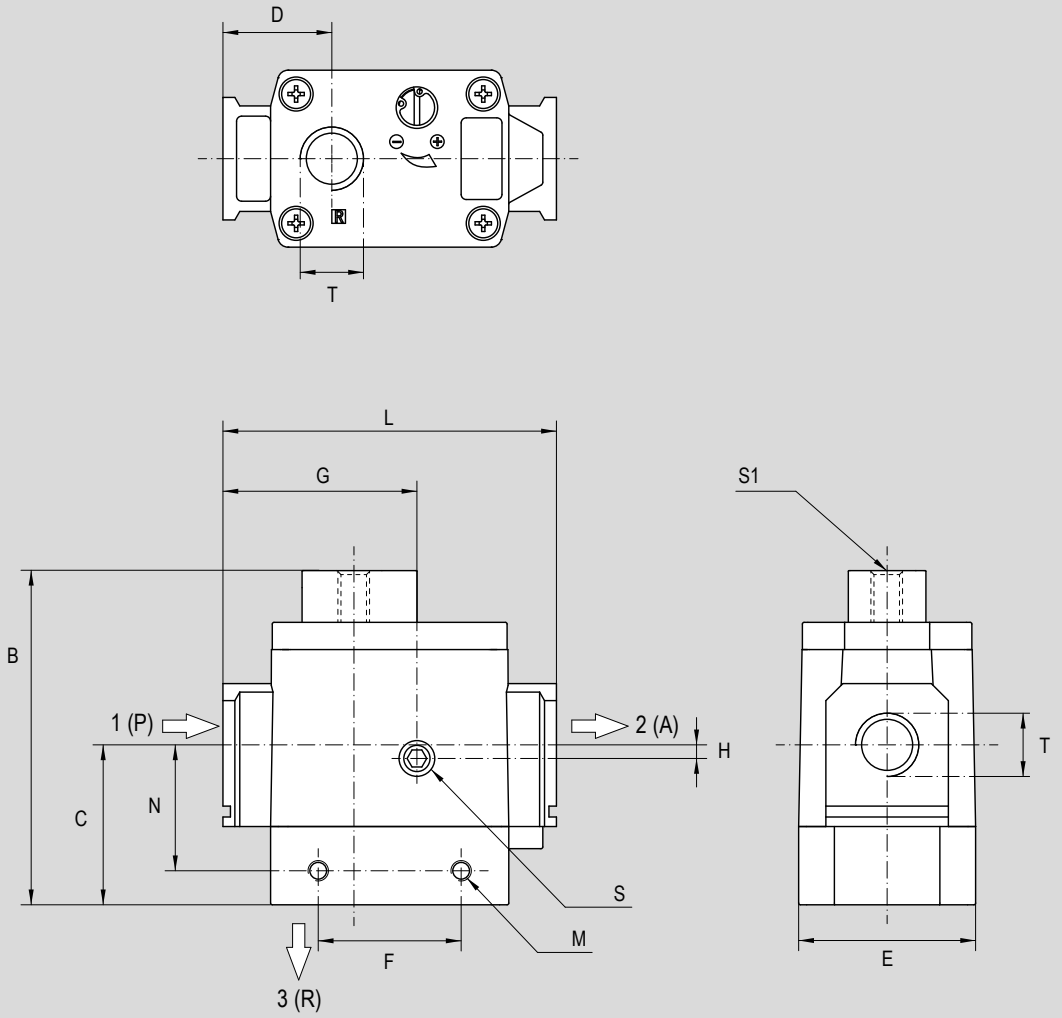

Item	Code	Size	B	C	D	E	F	G	H	L	M	N	S	S_1	T
AVP14P	090247	1/4"	75	31	22	40	29	38	0	66	M4	23,5	G1/8"	G1/8"	G1/4"
AVP38P	090248	3/8"	82	36	24	48	28	43	2	76	M5	27,5	G1/8"	G1/8"	G3/8"
AVP12P	090249	1/2"	97	47	32	52	42	57	3	98	M6	42	G1/8"	G1/8"	G1/2"

Main features

Code	Item	Size	Function	Symbol
090152	VMS14	1/4"	Exhaust manual operated valve	
090153	VMS38	3/8"		
090154	VMS12	1/2"		
090265	VMS01	1"		



Technical data

Type	VMS14	VMS38	VMS12	VMS01
Size	1/4"	3/8"	1/2"	1"
Fluid	Compressed air			
Pressure range	0 ÷ 10 bar			
Temperature range	-5°C ÷ +60°C			
Connections	1/4"	3/8"	1/2"	1"
Exhaust	1/8"	1/4"	3/8"	1/2"
Safety	Lockable			

Notes

Spacers and mounting brackets to be ordered separately, see page 3.2.300

Standard dimensions

Type: **VMS**

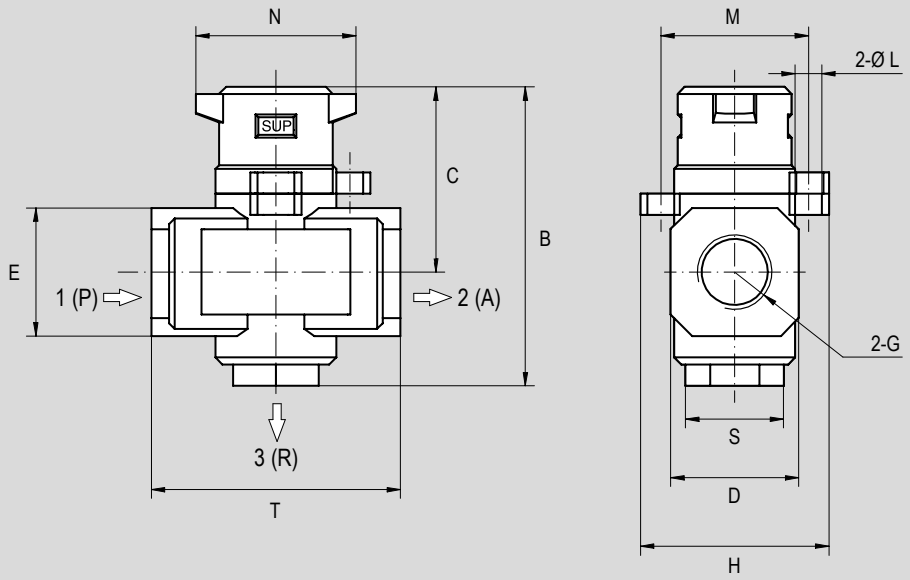

Item	Code	Size	G	S	T	B	C	D	E	H	ØL	M	N
VSM14	090152	1/4”	G1/4"	G1/8"	40	59	39	28	22	41	6	32	40
VSM38	090153	3/8”	G3/8"	G1/4"	53	78	49	30	28	53	7,5	41,5	45
VSM12	090154	1/2”	G1/2"	G3/8"	70	84	52	36	36	53	7,5	41,5	45
VSM01	090265	1”	G1"	G1/2"	90	136	72	54	48	90	8,5	77	68

Spacer, D..



Size	Code	Item	Matching
1/4"	090148	D14	A..FRRL A..FRR A..F.. A..R.. A..L.. AVP.. VMS..
3/8"	090149	D38	
1/2"	090150	D12	
1"	090151	D01	

Spacer with "T" type porting block, DT..



Size	Code	Item	Matching
1/4"	090129	DT14	A..FRRL* A..F.. A..R.. A..L..* AVP.. VMS..
3/8"	090130	DT38	
1/2"	090131	DT12	
1"	090132	DT01	

*To be applied exclusively on the "out" port

Spacer with "L" type bracket, DSL..



Size	Code	Item	Matching
1/4"	090133	DSL14	A..FRRL A..FRR A..F.. A..R.. A..L.. AVP.. VMS..
3/8"	090134	DSL38	
1/2"	090135	DSL12	
1"	090136	DSL01	

Spacer with "T" type bracket, DST..



Size	Code	Item	Matching
1/4"	090137	DST14	A..FRRL* A..FRR A..F.. A..R.. A..L.. AVP.. VMS..
3/8"	090138	DST38	
1/2"	090139	DST12	
1"	090140	DST01	

*Supplied as standard

Mounting bracket for regulator and filter-regulator, SR..



Size	Code	Item	Matching
1/4"	090141	SR14	A..FRRL A..FRR A..R
3/8"	090142	SR38	
1/2"	090143	SR1201	
1"			

Mounting bracket for filter and lubricator, SFL..



Size	Code	Item	Matching
1/4"	090144	SFL14	A..F A..L
3/8"	090145	SFL38	
1/2"	090146	SFL12	
1"	090147	SFL01	

Mounting bracket for precision regulator, SRP..



Size	Code	Item	Matching
1/8"	090315	SRP18	A..RP
1/4"	090316	SRP14	
1/2"	090317	SRP12	

Slide valves V26..



Size	Code	Item	Matching
1/4"	030703	V260014	A..FRRL A..FRR A..F.. A..R.. A..L..
3/8"	030704	V260038	
1/2"	030705	V260012	

Coils ASA12..



Voltage	Code	Item	Matching
12V DC	032100	ASA1201200	AVP..E
12V AC	032101	ASA1201250	
24V DC	032102	ASA1202400	
24V AC	032103	ASA1202450	
48V AC	032104	ASA1204850	
110V AC	032105	ASA1211050	
230V AC	032106	ASA1223050	

Connectors A122..*



Code	Item	Type
032118	A12209N	Black standard
033521	A12209NK	Black standard cabled
032204	A12209T1	LED+VDR transparent 24VAC-DC
032205	A12209T2	LED+VDR transparent 115VAC-DC
032206	A12209T3	LED+VDR transparent 230VAC-DC
033522	A12209N1K	LED+VDR black cabled 24VAC-DC
033523	A12209N2K	LED+VDR black cabled 115VAC-DC
033524	A12209N3K	LED+VDR black cabled 230VAC-DC

* For coils type ASA12

Main features

Type	Description
TP..F	Polycarbonate cup with metal protection, for filter. Compatible with types FRRL, FRR, F and FD.



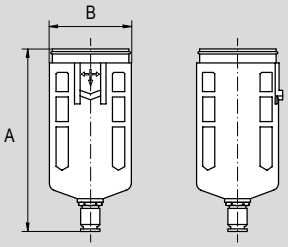

Dimensions

Size	Code	Item	A	B
1/4”	090155	TP14F	92	36
3/8”	090156	TP38F	114	44
1/2”	090157	TP12/01/112/200F	140	60
1”				

Main features

Type	Description
TM..F	Metal cup for filter. Compatible with types FRRL, FRR, F and FD.



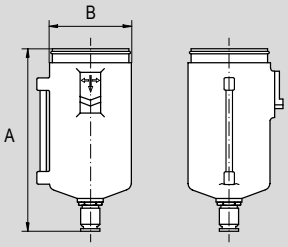

Dimensions

Size	Code	Item	A	B
1/4”	090121	TM14F	92	36
3/8”	090122	TM38F	114	44
1/2”	090123	TM12/01/112/200F	140	60
1”				

Main features

Type	Description
TP..L	Polycarbonate cup with metal protection, for lubricator. Compatible with types FRRL and L.



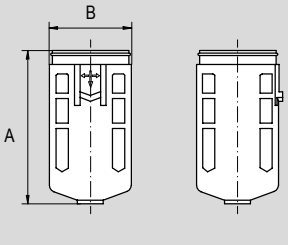

Dimensions

Size	Code	Item	A	B
1/4”	090159	TP14L	72	36
3/8”	090160	TP38L	90	44
1/2”	090161	TP12/01/112/200L	118	60
1”				

Main features

Type	Description
TM..L	Metal cup for lubricator. Compatible with types FRRL and L.



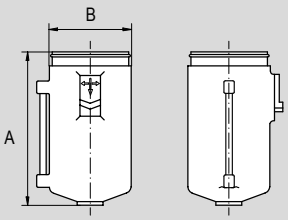

Dimensions

Size	Code	Item	A	B
1/4”	090125	TM14L	72	36
3/8”	090126	TM38L	90	44
1/2”	090127	TM12/01/112/200L	118	60
1”				

Sintered bronze standard filter cartridge 25 µm, CA../25



Size	Code	Item	Matching
1/4”	090171	CA14/25	FRRL FRR F
3/8”	090172	CA38/25	
1/2”	090173	CA12/25	
1”	090174	CA01/25	

Plastic filter cartridge 5 µm, CA../5



Size	Code	Item	Matching
1/4”	090175	CA14/5	FRRL FRR F
3/8”	090176	CA38/5	
1/2”	090177	CA12/5	
1”	090178	CA01/5	

Plastic filter cartridge 0,3 µm, CA../03



Size	Code	Item	Matching
3/8”	090281	CA38/03	FD
1/2”	090282	CA12/03	
1”	090283	CA01/03	

Diaphragm for regulators, DF



Size	Code	Item	Matching
1/4”	090179	DF14	FRRL FRR R
3/8”	090180	DF38	
1/2”	090181	DF12	
1”	090182	DF01	

Cup seals kit, ORT..



Size	Code	Item	Matching
1/4”	090187	ORT14	FRRL FRR F FD L
3/8”	090188	ORT38	
1/2”	090189	ORT12/01/112/200	
1”			

Oil regulation kit, OL..



Size	Code	Item	Matching
1/4”	090183	OL14	FRRL L
3/8”	090184	OL38/12/01	
1/2”			
1”			

F-R-L UNITS

1-1/2" and 2"



Find out our
key products

- **Solution for most applications**
- **Easy and intuitive choice**
- **Excellent value for money**
- **Wide availability**
- **Fast delivery**

Main features and certifications

Aluminium air treatment units: filters (F), regulators (R) and lubricators (L) available in sizes 1-1/2" and 2". The regulators are equipped with relieving valve. Polycarbonate cups with metal protection.
Supplied as standard in compliance to Reach and RoHS directives, and SIL certified.
Pressure-gauges to be ordered separately.

Filters series A..F, 1-1/2" and 2"

from page 3.6.20



Aluminium filters available in sizes 1-1/2" and 2". Equipped with 25µm filtering element and semi-automatic condense drain. The polycarbonate cup is with metal protection.
Spare parts available for filter, cup and cup seals.



Regulators series A..R, 1-1/2" and 2"

from page 3.6.50



Aluminium regulators available in sizes 1-1/2" and 2". Equipped with relieving valve and practical plastic regulation knob.
Pressure-gauges to be ordered separately.



Lubricators series A..L, 1-1/2" and 2"

from page 3.6.80



Aluminium lubricators available in sizes 1-1/2" and 2". Equipped with oil regulation cup, and polycarbonate cup with metal protection. The lubricant can be added without stopping the air supply.
Spare parts available for oil regulation cup, cup and cup seals.



Options

Description	Symbol	Suffix
Filter cartridge 5 µm		**5**
Automatic condense drain		**SA**
Metal cup		**TM**
NPT thread		**NPT**

The options, when this is possible, can be combined with each other. For options matching see the table below; For code key see from page 3.6.4

Options matching

Type	Size	Model	Standard options matching			
			5	**SA**	**TM**	**NPT**
A..F	1 1/2" - 2"	Standard	●	●	●	●
		Filter cartridge 5 µm (5)		●	●	●
		Automatic condense drain (SA)	●		●	●
		Metal cup (TM)	●	●		●
A..R	1 1/2" - 2"	Standard	-	-	-	●
A..L	1 1/2" - 2"	Standard	-	-	●	●
		Metal cup (TM)	-	-		●

Key
● allowed matching; - not allowed matching

Code key

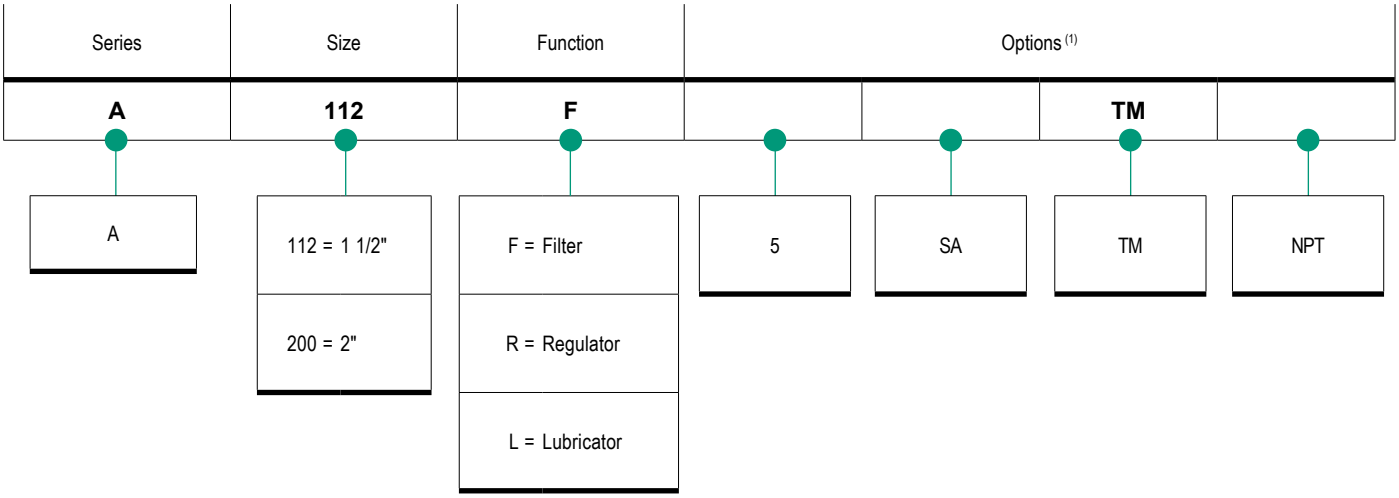

How to order

Series	Size	Function	Options
A	112	F	TM

Notes

For standard materials see table at page 3.6.5

Options in the same grid are alternative to each others.

(1) For further information on options and their matching see page 3.6.3

Standard materials for filters, regulators and lubricators

Type: **A..F**

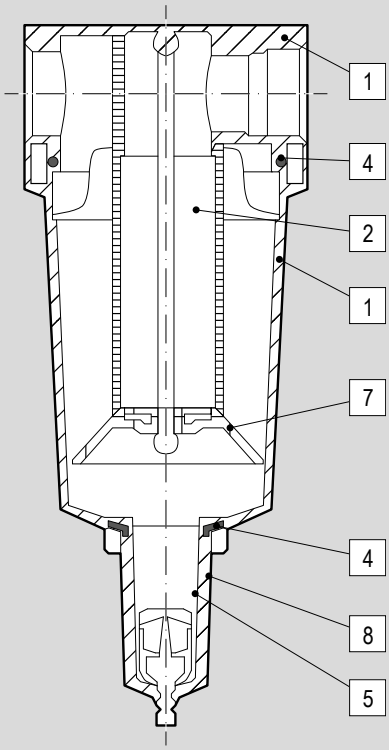

Type: **A..R**

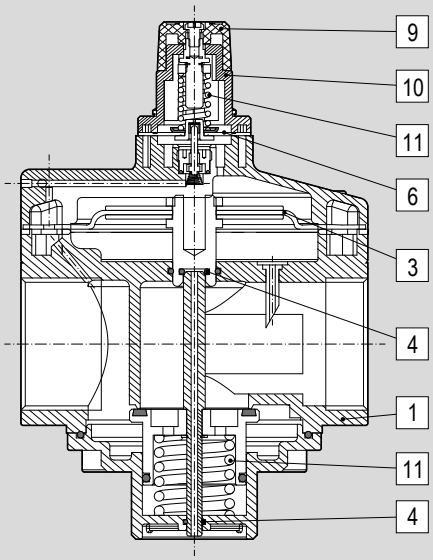

Type: **A..L**

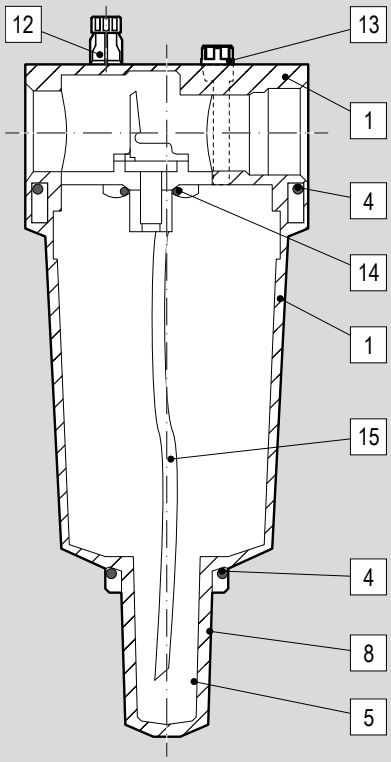

Position	Description	Material		
		A..F	A..R	A..L
1	Body	Die-cast aluminium		
2	Filtering element	Sintered bronze	-	
3	Main valve diaphragm	-	NBR	-
4	Seal	NBR		
5	Cup	Polycarbonate	-	Polycarbonate
6	Diaphragm	-	NBR	-
7	Diaphragm holder	Carbon steel	-	
8	Cup protection	Painted aluminium	-	Painted aluminium
9	Knob	-	Renforced nylon	-
10	Cover	-	Die-cast aluminium	-
11	Spring	-	Spring steel	-
12	Sight-glass	-	-	Polycarbonate
13	Needle valve assembly	-	-	Steel / Polymer
14	Nut seal	-	-	NBR
15	Syphon pipe	-	-	Polymer

Accessories

Type: **A..F**
A..L

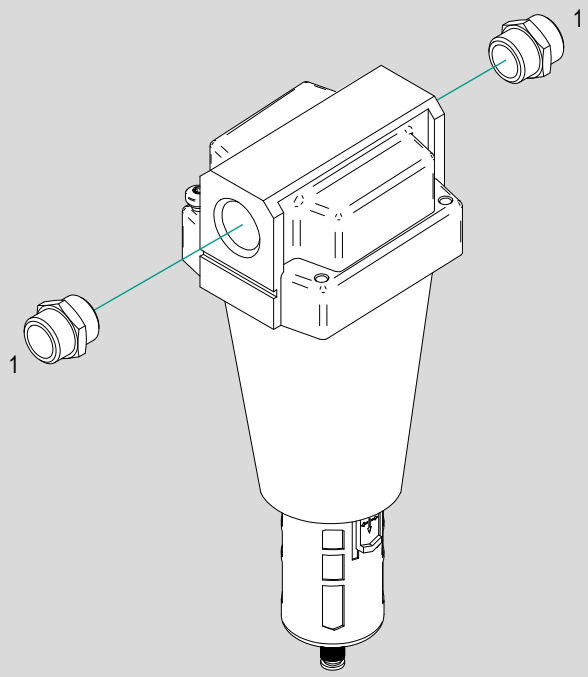

Type: **A..R**

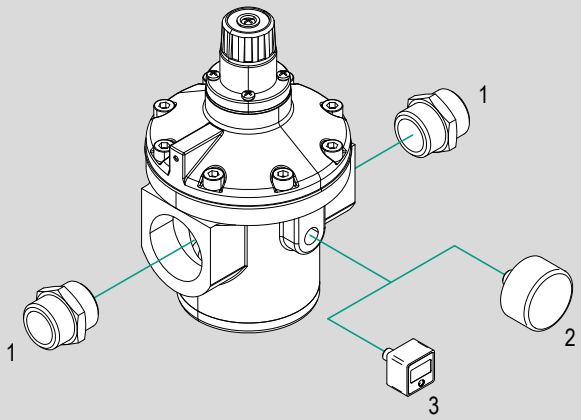

N.	Size	Item	Description	Matching			Code key and data sheet page
				A..F	A..R	A..L	
1	1 1/2" ÷ 2"	A..	BSP nipple male/male	●	●	●	4.35.1
2	1 1/2" ÷ 2"	M..	Analogic pressure-gauges	-	●	-	3.30.20
3	1 1/2" ÷ 2"	AKP60P..	Digital pressure-gauges	-	●	-	3.30.40

Key
● matching accessory; - not matching accessory

Main features

Code	Item	Size	Function	Symbol
090284	A112F	1 1/2"	Filter	
090287	A200F	2"		



Technical data

Type	A112F	A200F
Size	1 1/2"	2"
Fluid	Compressed air	
Maximum inlet pressure	10 bar	
Temperature range	+5°C ÷ +60°C	
Flow (at 6 bar)	11500 Nl/min.	18500 Nl/min.
Filtering element	25 µm (standard) 5 µm (5)	
Cup capacity	1800 cm^3	
Condense drain	Semi-automatic (standard) Automatic (SA)	
Weight	3080 g	5160 g

Notes

For nipples and connection elements with other components, see from page 4.35.1
For spare parts see from page 3.6.200

Standard dimensions

Type: **A..F**

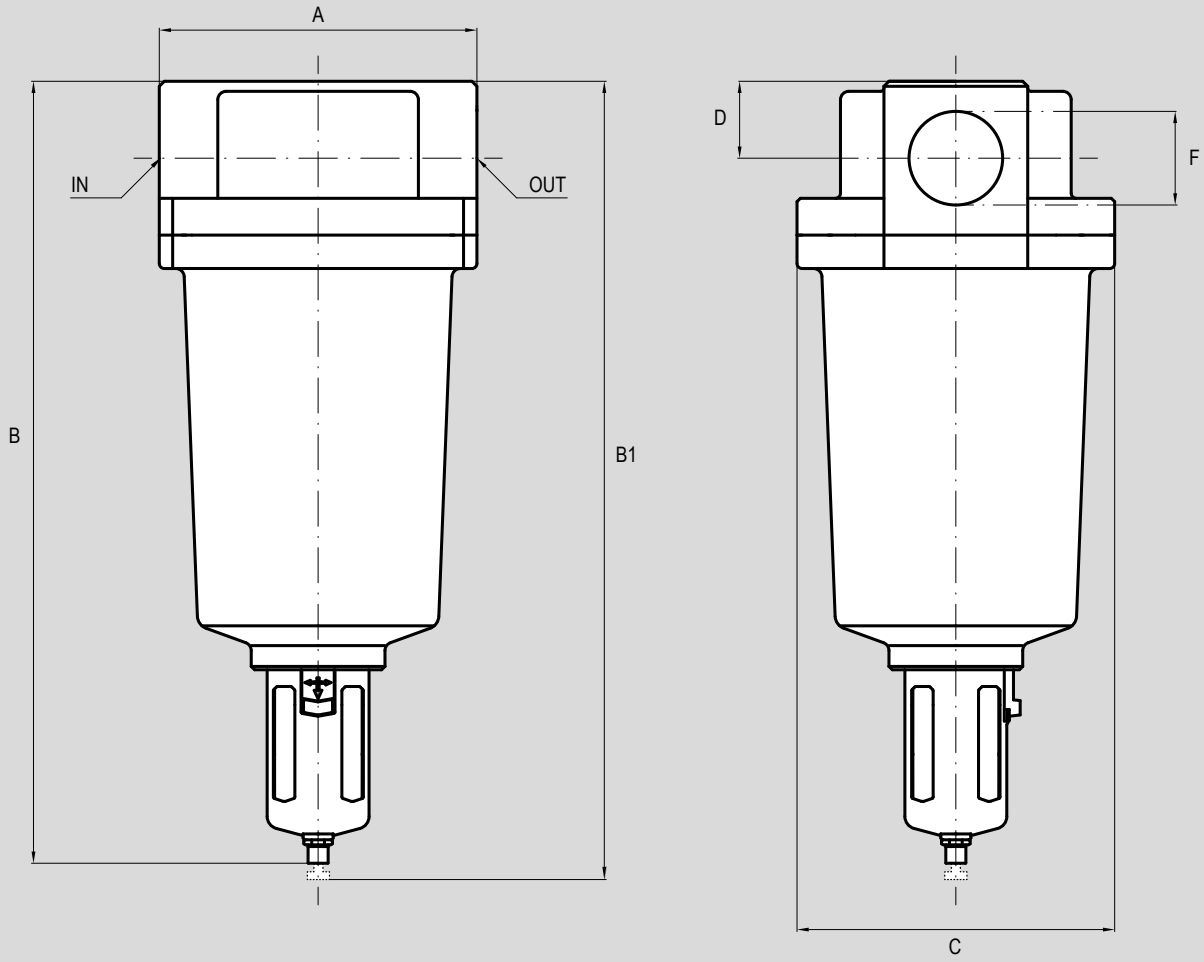

Item	Code	Size	Function	Symbol	A	B	B1*	C	D	F
A112F	090284	1 1/2"	Filter		150	390	394,5	140	33	G1 1/2"
A200F	090287	2"			190	470	474,5	190	46	G2"

* = With automatic codense drain option (SA)

Main features

Code	Item	Size	Function	Symbol
090285	A112R	1 1/2"	Regulator	
090288	A200R	2"		



Technical data

Type	A112R	A200R
Size	1 1/2"	2"
Fluid	Compressed air	
Maximum inlet pressure	10 bar	
Pressure regulation range	0,5 ÷ 8,5	
Temperature range	+5°C ÷ +60°C	
Flow (at 6 bar)	18000 Nl/min.	22000 Nl/min.
Pressure regulator	Diaphragm	
Overpressure relief	Relieving	
Gauges port	1/4"	
Weight	2500 g	3100 g

Notes

For nipples and connection elements with other components, see from page 4.35.1
Pressure-gauges to be ordered separately, see from page 3.30.1

Standard dimensions

Type: **A..R**

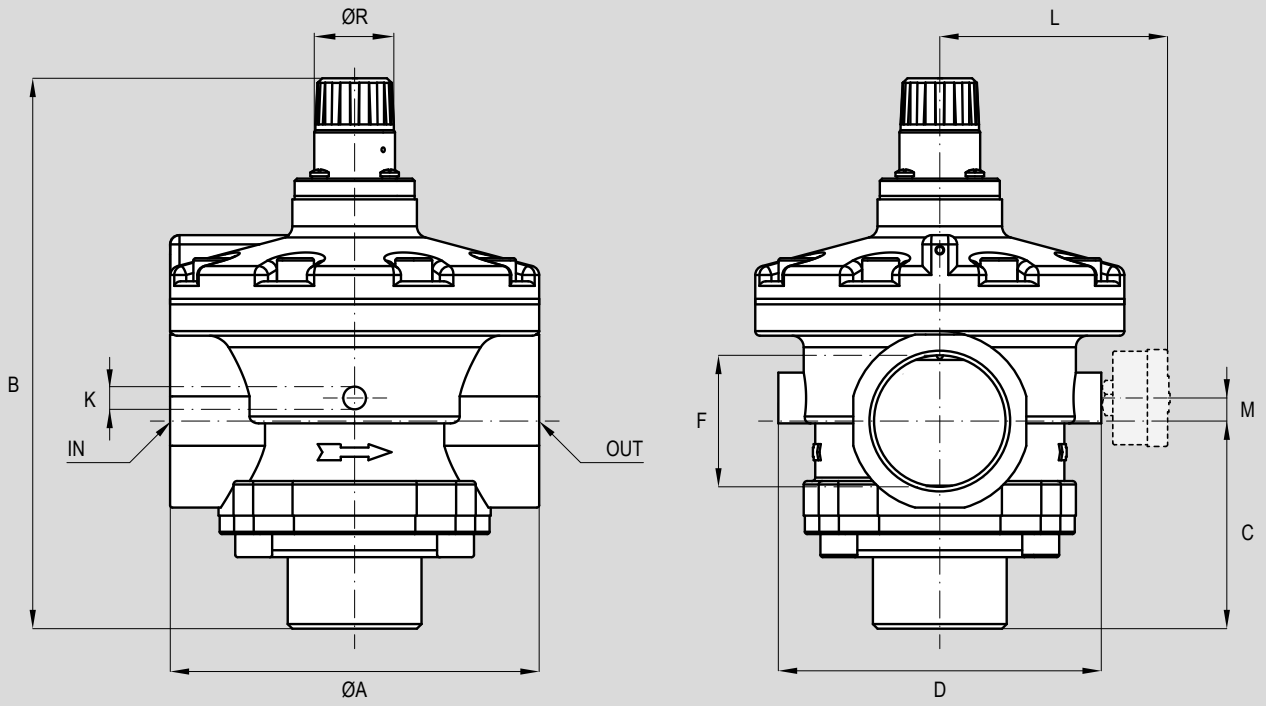

Item	Code	Size	Function	Symbol	ØA	B	C	D	F	K	L	M	ØR
A112R	090285	1 1/2"	Regulator		126	216	75	110	G1 1/2"	G1/4"	90,5	5	34
A200R	090288	2"			160	242	90	140	G2"	G1/4"	105,5	10	34

F-R-L units, 1-1/2" and 2"
Lubricators

Main features

Code	Item	Size	Function	Symbol
090286	A112L	1 1/2"	Lubricator	
090289	A200L	2"		



Technical data

Type	A112L	A200L
Size	1 1/2"	2"
Fluid	Compressed air	
Maximum inlet pressure	10 bar	
Temperature range	+5°C ÷ +60°C	
Minimum flow for lubrication (at 5 bar)	1000 l/min.	
Cup capacity	1600 cm^3	
Suggested lubricant	With viscosity ISO VG 32 compliant to ISO 3448 standards	
Weight	3140 g	3330 g

Notes

For nipples and connection elements with other components, see from page 4.35.1

For spare parts see from page 3.6.200

Standard dimensions

Type: **A..L**

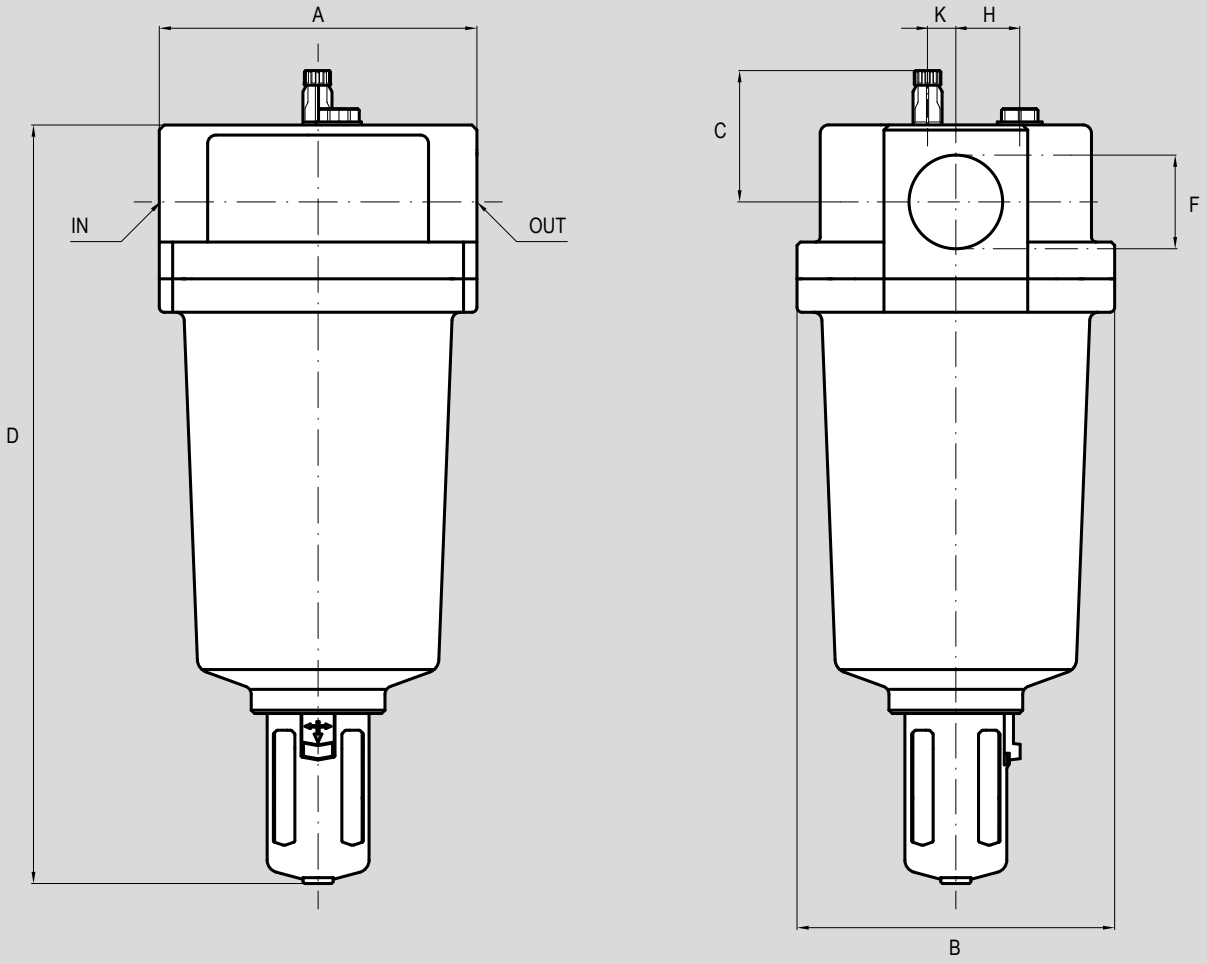

Item	Code	Size	Function	Symbol	A	B	C	D	F	H	K
A112L	090286	1 1/2"	Lubricator		150	140	71	410	G1 1/2"	40	15,5
A200L	090289	2"							G2"		

Main features

Type	Description
TP..F	Polycarbonate cup with metal protection, for filter. Compatible with filters types F.



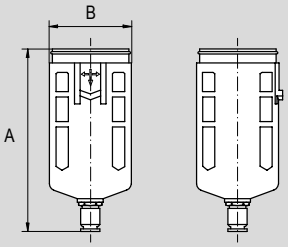

Dimensions

Size	Code	Item	A	B
1 1/2” 2”	090157	TP12/01/112/200F	140	60

Main features

Type	Description
TM..F	Metal cup for filters. Compatible with filters types F.



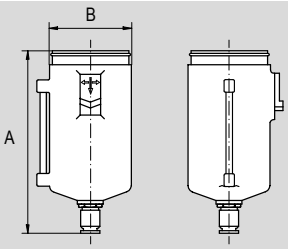

Dimensions

Size	Code	Item	A	B
1 1/2” 2”	090123	TM12/01/112/200F	140	60

Main features

Type	Description
TP..L	Polycarbonate cup with metal protection, for lubricator. Compatible with lubricators types L.



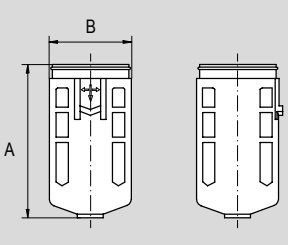

Dimensions

Size	Code	Item	A	B
1 1/2” 2”	090161	TP12/01/112/200L	118	60

Main features

Type	Description
TM..L	Metal cup for lubricator. Compatible with lubricators types L.



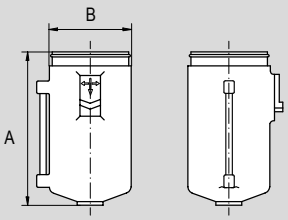

Dimensions

Size	Code	Item	A	B
1 1/2”	090127	TM12/01/112/200L	118	60
2”				

Sintered bronze standard filter cartridge 25 µm, CA../25



Size	Code	Item	Matching
1 1/2”	090290	CA112/25	F
2”	090291	CA200/25	

Plastic filter cartridge 5 µm, CA../5



Size	Code	Item	Matching
1 1/2”	090292	CA112/5	F
2”	090293	CA200/5	

Cup seals kit, ORT..



Size	Code	Item	Matching
1 1/2”	090189	ORT12/01/112/200	F L
2”			

Oil regulation kit, OL..



Size	Code	Item	Matching
1 1/2”	090294	OL112/200	L
2”			

MICROREGULATORS



Find out our
key products

- **Solution for most applications**
- **Easy and intuitive choice**
- **Excellent value for money**
- **Wide availability**
- **Fast delivery**

Main features and certifications

Components to reduce, regulate and maintain constant pressure in an industrial plant.
Supplied as standard in compliance to Reach and RoHS directives.
Pressure-gauges and mounting brackets to be ordered separately.

Microregulators series AC700, 1/8" ÷ 1/4"

from page 3.10.10



Series of microregulators with compact design.
Standard relieving with safety knob position lock.
Mounting brackets and pressure-gauges to be ordered separately.



Code key

Series	Type		Size
AC	**700**	**-**	**14RR**
AC	700		18RR = 1/8" 14RR = 1/4"

How to order

Series	Type		Size
AC	**700**	**-**	**14RR**

Notes

For standard materials see table below.

Options in the same grid are alternative to each others.

For pressure-gauges and mounting brackets, to be ordered separately, see from page 3.10.4

Standard materials

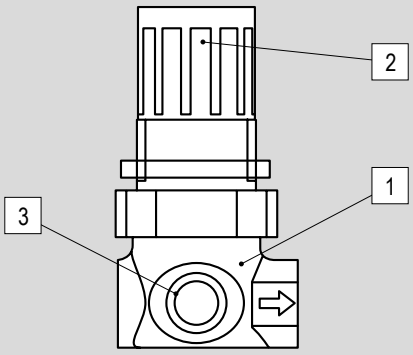

Position	Description	Material
1	Body	Black painted zinc
2	Knob	Acetalic resin
3	Seals	NBR

Accessories

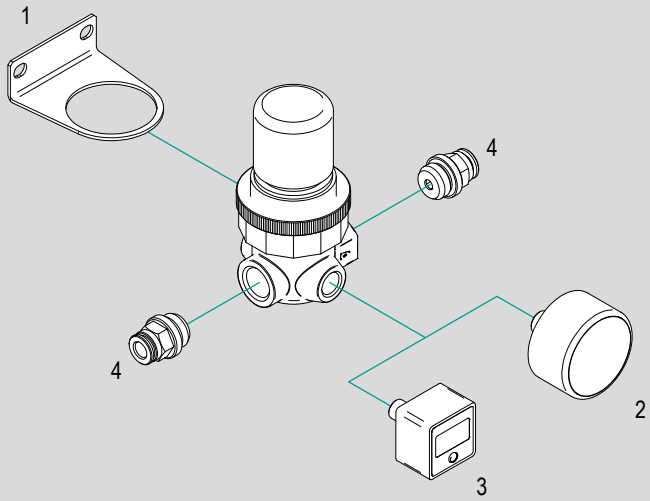

N.	Size	Item	Description	Matching	Code key page	Data sheet page
				AC700		
1	1/8" ÷ 1/4"	SR..	Mounting brackets	●	3.10.11	3.94.1
2	1/8" ÷ 1/4"	M..	Analogic pressure-gauges	●	3.30.20	
3	1/8" ÷ 1/4"	AKP60P..	Digital pressure-gauges	●	3.30.40	
4	1/8" ÷ 1/4"	R..	Push-in fittings	●	4.2.1	

Key
● matching accessory; – not matching accessory

Microregulators
Series AC700, 1/8" ÷ 1/4"

Main features

Code	Item	Size	Function	Symbol
090307	AC700-1/8RR	1/8"	Microregulator	
090306	AC700-1/4RR	1/4"		



Technical data

Type	AC700-1/8RR	AC700-1/4RR
Size	1/8"	1/4"
Fluid	Compressed air	
Maximum inlet pressure	15 bar	
Temperature range	+5°C ÷ +60°C	
Flow (at 6 bar)	390 Nl/min.	420 Nl/min.
Regulation range	0,5 ÷ 8,5 bar	

Notes

Mounting brackets to be ordered separately, see page 3.10.90

Standard dimensions

Type: **AC700**

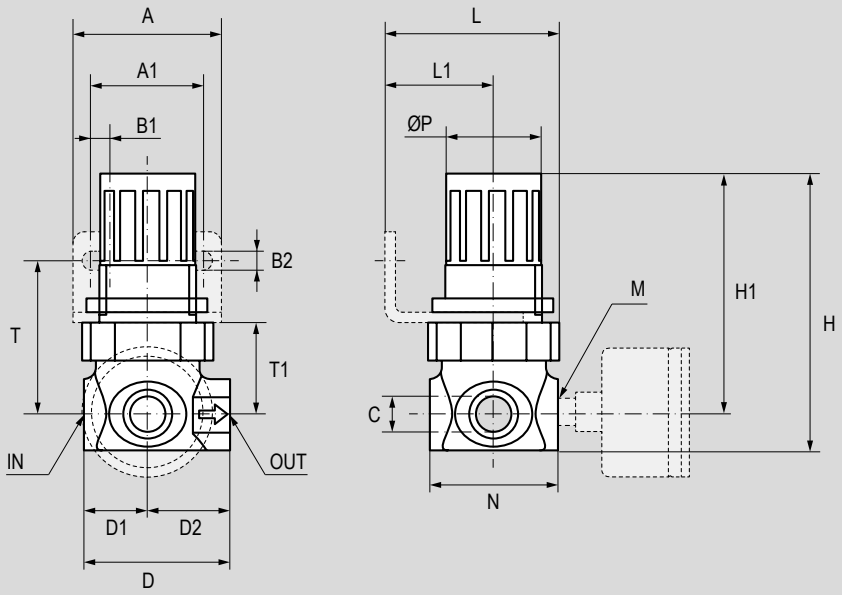

Item	Code	Size	A	A1	B1	B2	C	D	D1	D2	H	H1	L	L1	M	N	ØP	T	T1
AC700-1/8RR	090307	1/8"	36	30	6	6	G1/8"	41	19	23	75	64	54,5	35,5	G1/8"	38	28	36	24
AC700-1/4RR	090306	1/4"	36	30	6	6	G1/4"	41	19	23	75	64	54,5	35,5	G1/8"	38	28	36	24

Accessories for microregulators

Mounting brackets for microregulator, SR..

	Size	Code	Item	Matching
	1/8"	090308	SR700	AC700
	1/4"			

PRESSURE-GAUGES

vacuum-gauges and pressure switches



Find out our **key products**

- **Solution for most applications**
- **Easy and intuitive choice**
- **Excellent value for money**
- **Wide availability**
- **Fast delivery**

Main features and certifications

Analogic or digital pressure gauges, digital vacuum-gauges and pressure switches.
Supplied as standard in compliance to Reach and RoHS directives.
Mounting brackets to be ordered separately.

Analogic pressure-gauges, series M

from page 3.30.20



"Dry" analogic pressure-gauges for pressure sensing in pneumatic systems, with rear connection. Available in three dial sizes (Ø 40, 50 and 63), 1/8" or 1/4" connections, in different scale (from -1÷0 bar up to 0÷12 bar).



Analogic pressure-gauges, series MR

from page 3.30.20



"Dry" analogic pressure-gauges for pressure sensing in pneumatic systems, with in-line connection. Available in three dial sizes (Ø 40, 50 and 63), 1/8" or 1/4" connections, in different scale (from -1÷0 bar up to 0÷12 bar).



Analogic pressure-gauges, series MF

from page 3.30.20



"Dry" analogic pressure-gauges for pressure sensing in pneumatic systems, with rear connection and flange. Available in three dial sizes (Ø 40, 50 and 63), 1/8" or 1/4" connections, in different scale (from -1÷0 bar up to 0÷12 bar).



Analogic pressure-gauges, series MP

from page 3.30.20



"Dry" analogic pressure-gauges for pressure sensing in pneumatic systems, with rear connection and panel bracket. Available in three dial sizes (Ø 40, 50 and 63), 1/8" or 1/4" connections, in different scale (from -1÷0 bar up to 0÷12 bar).



Digital pressure-gauges, series AKP60P

from page 3.30.40



Digital pressure-gauges for pressure sensing in pneumatic systems, with rear 1/8" or 1/4" connections, with these features: backlight; easy and fast reading; lithium battery power supply; quick and easy installation; 4 programmable pressure units (MPa, kgf/cm^2, bar, psi) shown on display; power-saving mode; protection class IP65.



Digital vacuum-gauges, series AKP60V

from page 3.30.40



Digital vacuum-gauges for vacuum sensing in pneumatic systems, with rear 1/8" or 1/4" connections, with these features: backlight; easy and fast reading; lithium battery power supply; quick and easy installation; 4 programmable pressure units (kPa, bar, psi, mmHG) shown on display; power-saving mode; protection class IP65.



Digital pressure switches, series AKP43

from page 3.30.60



Digital pressure switches for instantaneous pressure display and also transmission of electrical signals, in positive pressure, vacuum and combined pressure versions. Available with 1/8" connection, PNP or NPN circuit, and these features: three color LCD display; backlight, easy and fast reading; 12÷24 VDC (±10%) power supply; 7 programmable pressure units (kPa, MPa, kgf/cm^2, bar, psi, mmHG, inHg) shown on display.

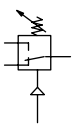

Analogic pressure-gauges code key

Series*	Dial Ø*	Connection*	Scale*
M	**50**	**B**	**0÷4**
M	40 = Ø 40 mm	A = 1/8"	-1÷0 = -1 ÷ 0 bar
MR	50 = Ø 50 mm	B = 1/4"	0÷2,5 = 0 ÷ 2,5 bar
MF	63 = Ø 63 mm		0÷4 = 0 ÷ 4 bar
MP			0÷6 = 0 ÷ 6 bar
			0÷10 = 0 ÷ 10 bar
			0÷12 = 0 ÷ 12 bar

How to order

Series	Dial Ø	Connection	Scale
M	**50**	**B**	**0÷4**

Notes

Options in the same grid are alternative to each others. For standard materials page 3.30.1

*For matching between dial connection and scale, see the table below.

More versions available on request

Matching standard analogic pressure-gauges

Series	Dial size	Connection	Scale						See from page
			-1÷0 bar	0÷2,5 bar	0÷4 bar	0÷6 bar	0÷10 bar	0÷12 bar	
M..	Ø 40 mm	1/8"	●	●	●	●	●	●	3.30.23
		1/4"	-	-	-	-	-	-	
	Ø 50 mm	1/8"	●	●	●	●	●	●	
		1/4"	●	●	●	●	●	●	
	Ø 63 mm	1/8"	-	-	-	-	-	-	
		1/4"	●	●	●	●	●	●	
MR..	Ø 40 mm	1/8"	●	-	-	●	-	●	3.30.24
		1/4"	-	-	-	-	-	-	
	Ø 50 mm	1/8"	-	-	-	-	-	-	
		1/4"	●	-	-	●	-	●	
	Ø 63 mm	1/8"	-	-	-	-	-	-	
		1/4"	●	-	-	●	-	●	
MF..	Ø 40 mm	1/8"	●	-	-	●	-	●	3.30.25
		1/4"	-	-	-	-	-	-	
	Ø 50 mm	1/8"	●	-	-	●	-	●	
		1/4"	●	-	-	●	-	●	
	Ø 63 mm	1/8"	-	-	-	-	-	-	
		1/4"	●	-	-	●	-	●	
MP..	Ø 40 mm	1/8"	●	-	-	●	-	●	3.30.26
		1/4"	-	-	-	-	-	-	
	Ø 50 mm	1/8"	-	-	-	-	-	-	
		1/4"	●	-	-	●	-	●	
	Ø 63 mm	1/8"	-	-	-	-	-	-	
		1/4"	●	-	-	●	-	●	

Key
● allowed matching; - not allowed matching

Analogic pressure-gauges standard materials

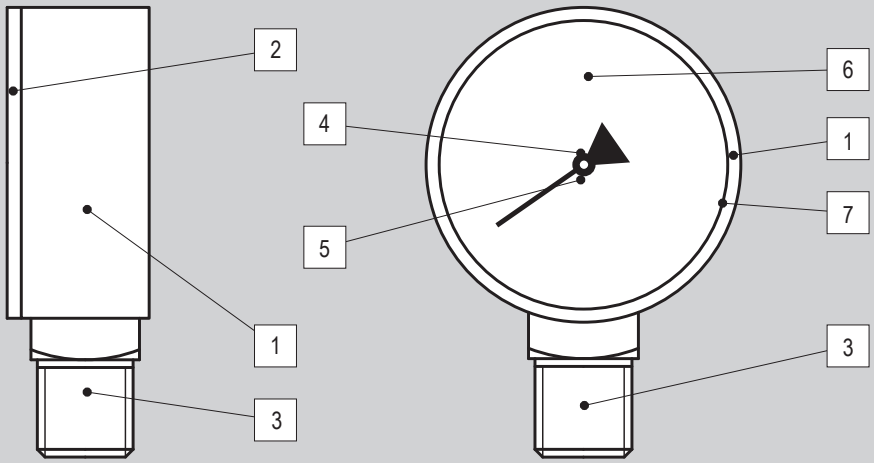

Position	Description	Material			
		M	MR	MF	MP
1	Housing	Black ABS		Chrome-plated or black painted steel	Chrome-plated steel
2	Screen	Kostil			
3	Connection	Brass OT58			
4	Elastic element	Tubolar spring in copper alloy			
5	Movement	Brass			
6	Dial	Wihite ABS with double scale (black = bar, red = psi)			
7	Welding	Sn-Pb alloy			

Notes

More versions available on request

Main features

Series	Description	Symbol
M..	Analogic pressure-gauges with rear connection	
MR..	Analogic pressure-gauges with in-line connection	
MF..	Analogic pressure-gauges with rear connection and flange	
MP..	Analogic pressure-gauges with rear connection and panel bracket	






Technical data

Series	M	MR	MF	MP
Fluid	Compressed air			
Connections*	1/8"; 1/4"			
Dial dimensions*	Ø 40 mm; Ø 50 mm; Ø 63 mm			
Scale*	-1÷0 bar; 0÷2,5 bar; 0÷4 bar; 0÷6 bar; 0÷10 bar; 0÷12 bar	-1÷0 bar; 0÷6 bar; 0÷12 bar		
Static pressure	Up to 3/4 of scale end			
Fluctuating pressure	Within 2/3 of scale end			
Maximum pressure (for short periods)	Up to the value of scale end			
Temperature range	-20°C ÷ +60°C			
Class protection	IP41			
Precision	Classe CI 1.6			
Threads	UNI-ISO 7/1 (BSPT)			

Notes

* For available combinations see page 3.30.3 and technical data of each series.
More type, dial dimensions, connections and scale available on request.

Standard dimensions

Type: **M**

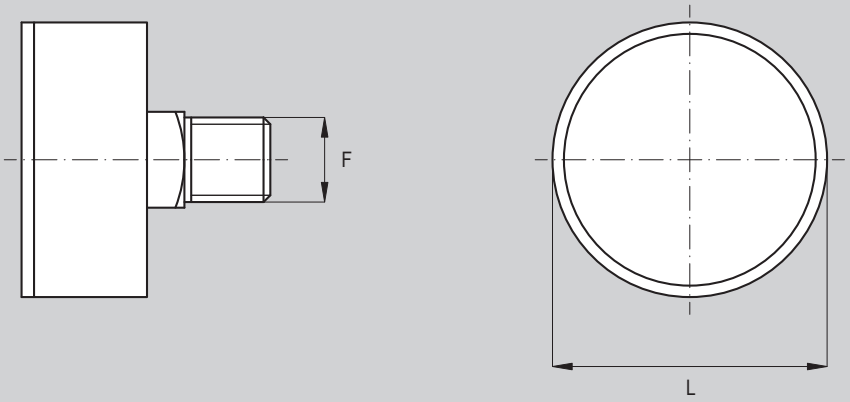

Item	Code	Connections	Dial Ø	Scale bar	F	L	Weight g
M40A-1÷0	028501	1/8"	Ø40	-1÷0	1/8"	40	38
M40A0÷2,5	028651			0÷2,5	1/8"	40	38
M40A0÷4	028701			0÷4	1/8"	40	38
M40A0÷6	028801			0÷6	1/8"	40	38
M40A0÷10	028851			0÷10	1/8"	40	38
M40A0÷12	028901			0÷12	1/8"	40	38
M50A-1÷0	028502		Ø50	-1÷0	1/8"	50	40
M50A0÷2,5	028900			0÷2,5	1/8"	50	40
M50A0÷4	028702			0÷4	1/8"	50	40
M50A0÷6	028802			0÷6	1/8"	50	40
M50A0÷10	028915			0÷10	1/8"	50	40
M50A0÷12	028902			0÷12	1/8"	50	40
M50B-1÷0	028925	1/4"		-1÷0	1/4"	50	40
M50B0÷2,5	028994			0÷2,5	1/4"	50	40
M50B0÷4	028917			0÷4	1/4"	50	40
M50B0÷6	028992			0÷6	1/4"	50	40
M50B0÷10	028993			0÷10	1/4"	50	40
M50B0÷12	028913			0÷12	1/4"	50	40
M63B-1÷0	028503		Ø63	-1÷0	1/4"	63	75
M63B0÷2,5	028995			0÷2,5	1/4"	63	75
M63B0÷4	028703			0÷4	1/4"	63	75
M63B0÷6	028803			0÷6	1/4"	63	75
M63B0÷10	028996			0÷10	1/4"	63	75
M63B0÷12	028903			0÷12	1/4"	63	75

Notes

More versions available on request

Standard dimensions

Type: **MR**

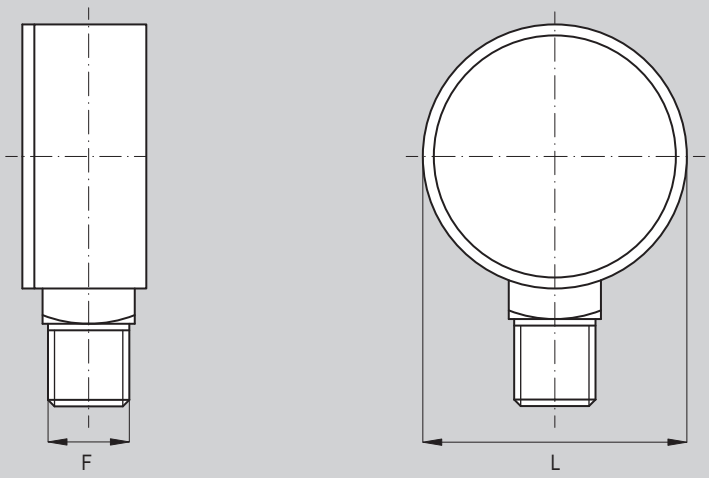

Item	Code	Connections	Dial Ø	Scale bar	F	L	Weight g
MR40A-1÷0	028504	1/8"	Ø40	-1÷0	1/8"	40	38
MR40A0÷6	028804			0÷6	1/8"	40	38
MR40A0÷12	028904			0÷12	1/8"	40	38
MR50B-1÷0	029000	1/4"	Ø50	-1÷0	1/4"	50	40
MR50B0÷6	028977			0÷6	1/4"	50	40
MR50B0÷12	028905			0÷12	1/4"	50	40
MR63B-1÷0	028506		Ø63	-1÷0	1/4"	63	75
MR63B0÷6	028806			0÷6	1/4"	63	75
MR63B0÷12	028906			0÷12	1/4"	63	75

Notes

More versions available on request

Standard dimensions

Type: **MF**

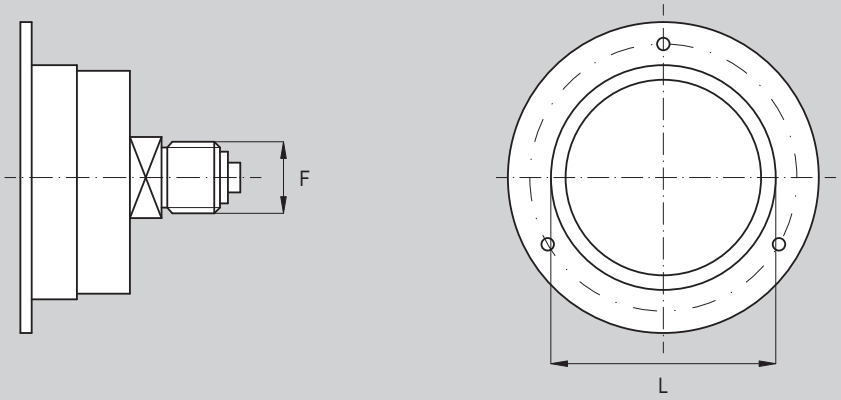

Item	Code	Connections	Dial Ø	Scale (bar)	F	L	Weight g
MF40A-1÷0	028510	1/8”	Ø40	-1÷0	1/8”	43	74
MF40A0÷6	028810			0÷6	1/8”	43	74
MF40A0÷12	028910			0÷12	1/8”	43	74
MF50A-1÷0	029013		Ø50	-1÷0	1/8”	53	102
MF50A0÷6	028811			0÷6	1/8”	53	102
MF50A0÷12	029072			0÷12	1/8”	53	102
MF50B-1÷0	028511	1/4”		-1÷0	1/4”	53	102
MF50B0÷6	028714			0÷6	1/4”	53	102
MF50B0÷12	028911			0÷12	1/4”	53	102
MF63B-1÷0	028512		Ø63	-1÷0	1/4”	63,5	145
MF63B0÷6	028812			0÷6	1/4”	63,5	145
MF63B0÷12	028912			0÷12	1/4”	63,5	145

Notes

More versions available on request

Standard dimensions

Type: **MP**

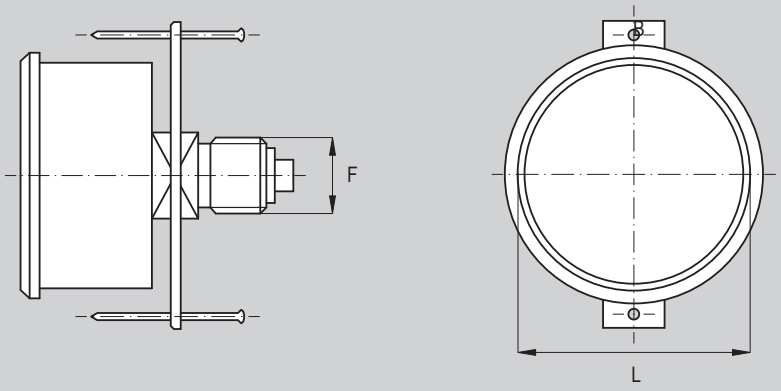

Item	Code	Connections	Dial Ø	Scale (bar)	F	L	Weight g
MP40A-1÷0	028507	1/8"	Ø40	-1÷0	1/8"	39	99
MP40A0÷6	028807			0÷6	1/8"	39	99
MP40A0÷12	028907			0÷12	1/8"	39	99
MP50B-1÷0	028508	1/4"	Ø50	-1÷0	1/4"	52	145
MP50B0÷6	028808			0÷6	1/4"	52	145
MP50B0÷12	028908			0÷12	1/4"	52	145
MP63B-1÷0	028509		Ø63	-1÷0	1/4"	62	174
MP63B0÷6	028809			0÷6	1/4"	62	174
MP63B0÷12	028909			0÷12	1/4"	62	174

Notes

More versions available on request

Digital pressure-gauges and vacuum-gauges code key

Series	Function	Connection
AKP60	**P**	**14**
AKP60	P = pressure-gauges V = vacuum-gauges	18 = 1/8" 14 = 1/4"

How to order

Series	Function	Connection
AKP60	**P**	**14**

Notes

Options in the same grid are alternative to each others.

Accessories for digital pressure-gauges, vacuum-gauges and pressure switches

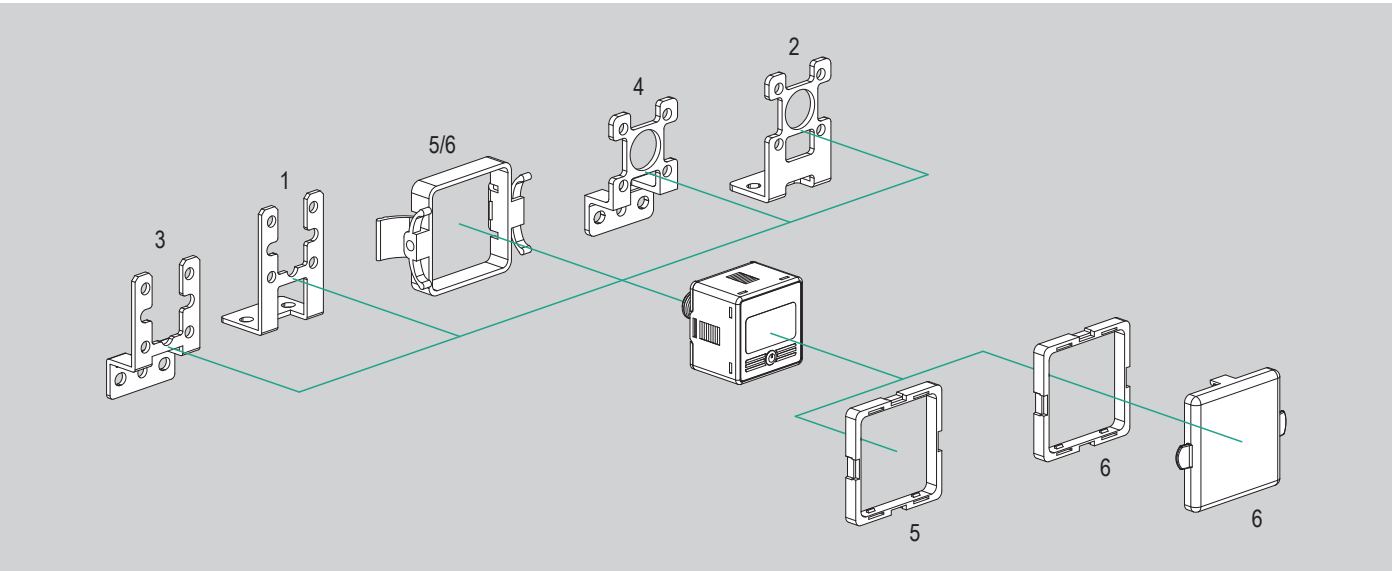

N.	Size	Item	Description	Matching			Code key page	Data sheet page
				M..	AKP60	AKP43		
1	1/8" ÷ 1/4"	ABT5	Straight mounting brackets	-	●	-	3.30.90	3.96.1
2	1/8"	AKP12	Straight mounting brackets	-	-	●		3.96.2
3	1/8" ÷ 1/4"	ABT6	Type "L" mounting brackets	-	●	-		3.96.1
4	1/8"	AKP13	Type "L" mounting brackets	-	-	●		3.96.2
5	1/8" ÷ 1/4"	APAC	Panel adapter	-	●	●		3.96.10
6	1/8" ÷ 1/4"	APAD	Panel adapter with front potective lid	-	●	●		3.96.10

Key
● matching accessory; - not matching accessory

Main features

Series	Description	Symbol
AKP60P..	Digital pressure-gauges	
AKP60V..	Digital vacuum-gauges	



Technical data

Item	AKP60P18	AKP60P14	AKP60V18	AKP60V14
Code	024805	024806	024803	024804
Size	1/8"	1/4"	1/8"	1/4"
Connection	M5			
Fluid	Compressed filtered air, incombustible and non-corrosive gases			
Function	Pressure-gauge		Vacuum-gauge	
Rated pressure range(1)	0 ÷ 10 bar		-1,01 ÷ 0 bar	
Display pressure range(2)	0,1 ÷ 10 bar		-1,01 ÷ + 0,1 bar	
Maximum pressure	15 bar		3 bar	
Pressure units	MPa, kgf/cm2, bar, psi (user selectable)		kPa, bar, psi, mmHg (user selectable)	
Pressure resolution	- 0.001 MPa 0.01 kgf/cm2 0.01 bar 0.1 psi -		1 kPa - - 0.01 bar 0.1 psi 1 mmHg	
Repeatibility	≤ ±0.2% F.S. ±1 digit		≤ ±1% F.S. ±1 digit	
LCD display	3½ digit, 7 segment			
Class protection	IP65			
Temperature range	0°C ÷ +50°C			
Lithium battery	CR 2032 (battery life 1 year, 5 times/day) low battery indicator on display			
Display turn off	60 sec.			

Notes

(1) Pressure range within technical features of components are granted.

(2) Pressure range possible to display on component. Pressure values displayed can also be off the nominal pressure range and in this case technical features are not granted.

Function

AKP60P

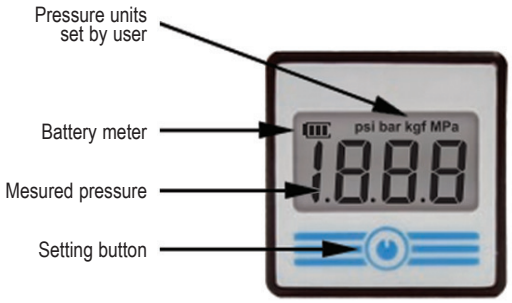

AKP60V

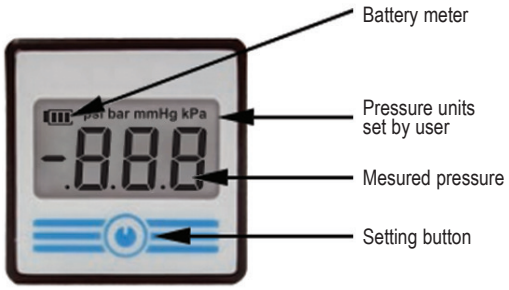

Panel mounting*

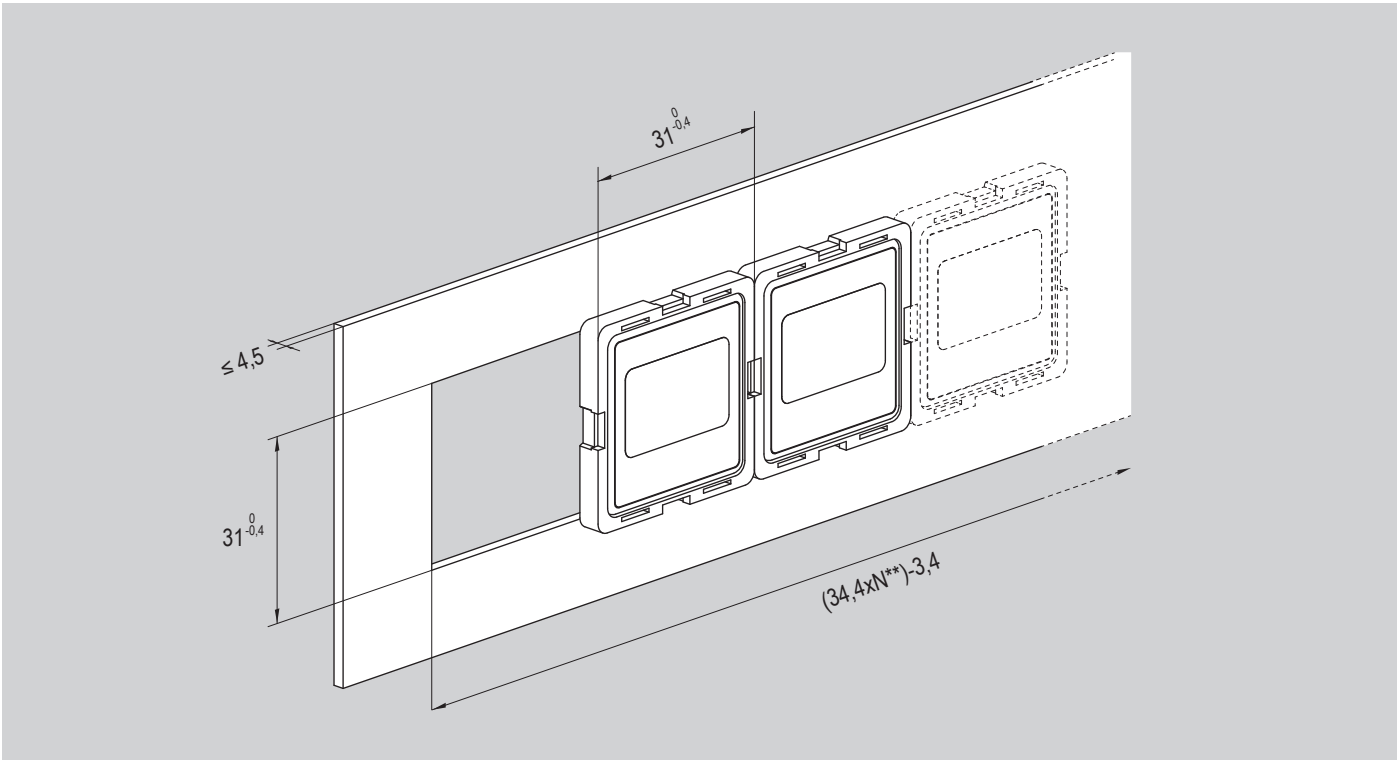

*Possible only with APAD or APAC , see page 3.30.90
**N = number of components to install

Standard dimensions

Type: **AKP60**

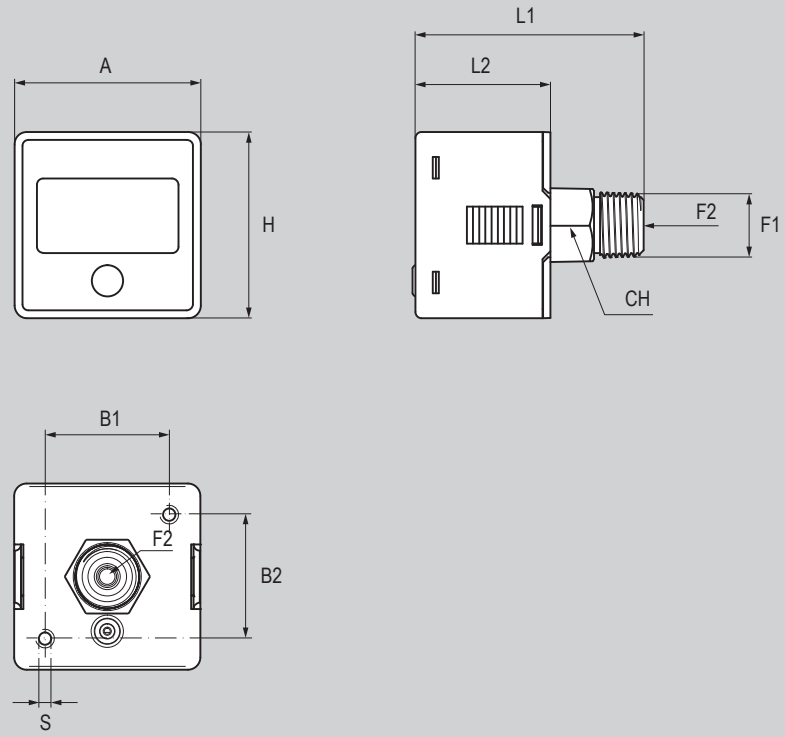

Item	Code	Connections	Function	A	B1	B2	CH	F1	F2	H	L1	L2	S	Weight g
AKP60P18	024805	1/8”-M5	Pressure-gauge	30	20	20	12	G1/8"	M5	30	37	21,8	M3	40
AKP60P14	024806	1/4”-M5		30	20	20	14	G1/4"	M5	30	37	21,8	M3	40
AKP60V18	024803	1/8”-M5	Vacuum-gauge	30	20	20	12	G1/8"	M5	30	37	21,8	M3	40
AKP60V14	024804	1/4”-M5		30	20	20	14	G1/4"	M5	30	37	21,8	M3	40

Digital pressure switches code key

Series	Function	Circuit
AKP43	**P**	**030F3**
AKP43	P = Positive Pressures	010F3 = NPN
	V = Vacuum	030F3 = PNP
	C = Combined Pressures	

How to order

Series	Function	Circuit
AKP43	**P**	**030F3**

Notes

Options in the same grid are alternative to each others.

Accessories for digital pressure-gauges, vacuum-gauges and pressure switches

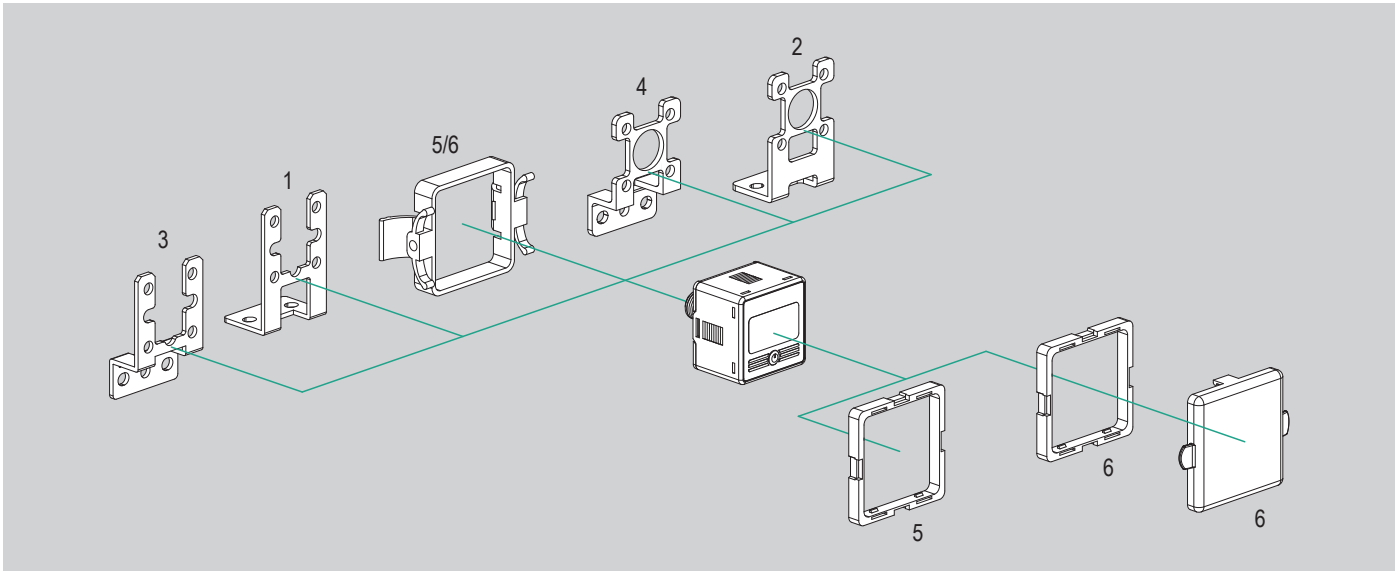

N.	Size	Item	Description	Matching			Code key page	Data sheet page
				M..	AKP60	AKP43		
1	1/8" ÷ 1/4"	ABT5	Straight mounting brackets	-	●	-	3.30.90	3.96.1
2	1/8"	AKP12	Straight mounting brackets	-	-	●		3.96.2
3	1/8" ÷ 1/4"	ABT6	Type "L" mounting brackets	-	●	-		3.96.1
4	1/8"	AKP13	Type "L" mounting brackets	-	-	●		3.96.2
5	1/8" ÷ 1/4"	APAC	Panel adapter	-	●	●		3.96.10
6	1/8" ÷ 1/4"	APAD	Panel adapter with front potective lid	-	●	●		3.96.10

Key
● matching accessory; - not matching accessory

Main features

Series	Description	Symbol
AKP43P..	Positive pressures digital switch	
AKP43V..	Vacuum digital switch	
AKP43C..	Combined pressures digital switch	



Technical data

Item	AKP43P010F	AKP43P030F	AKP43V010F	AKP43V030F	AKP43C010F	AKP43C030F
Code	024810	024811	024812	024813	024814	024815
Size - Connection	1/8" - M5					
Function	Positive pressures digital switch		Vacuum digital switch		Combined pressures digital switch	
Circuit	NPN	PNP	NPN	PNP	NPN	PNP
Fluid	Compressed filtered air, incombustible and non-corrosive gases					
Rated pressure range[1]	0 ÷ 10 bar		-1,01 ÷ 0 bar		-1 ÷ 1 bar	
Display pressure range[2]	0,1 ÷ 10 bar		-1,01 ÷ + 0,1 bar		-1,01 ÷ + 1,01 bar	
Maximum pressure	15 bar		3 bar			
Pressure units	MPa, kgf/cm2, bar, psi		kPa, kgf/cm2, bar, psi, inHg, mmHg			
Pressure resolution	- 0.001 MPa 0.01 kgf/cm2 0.01 bar 0.1 psi - -		1 kPa - 0.001 kgf/cm2 0.001 bar 0.01 psi 0.01 inHg 1 mmHg			
Repeatibility	≤ ±0.2% F.S. ±1 digit					
LCD display	Red / Green main&unit display - Orange sub-display (7 segment)					
Protection class	IP40					
Temperature range	0 ÷ +50°C					
Ambient humidity range	35 ÷ 85 %RH (without condense)					
Voltage	12 ÷ 24 V DC (±10%)					
Current consumption	≤ 40 mA (without load)					
Switch output (protected from over-run)	Open collector NPN (two outlets)		Open collector PNP (two outlets)			
	Max. load current: 125 mA		Max. load current: 125 mA			
	Max. supply voltage: 30V DC		Max. supply voltage: 24V DC			
	Residual voltage: ≤ 1.5V		Residual voltage: ≤ 1.5V			
	Response time: ≤ 2,5 ms (chattering-proof function 25, 100, 250, 500, 1000, 1500 ms)					
Hysteresis[3]	Adjustable					
Analog output	Output current: 1 ÷ 5V ± 2,5% F.S.					
	Linearity ± 1% F.S.					
	Output impedance ≈ 1kΩ					
Main cable (included)	Oil resistant cable (0,15mm2) - Lenght 200 mm					

Notes

(1) Pressure range within technical features of components are granted.

(2) Pressure range possible to display on component. Pressure values displayed can also be off the nominal pressure range and in this case technical features are not granted.

(3) Hysteresis value adjustable from 1 to 8 digits.

Electric sheme

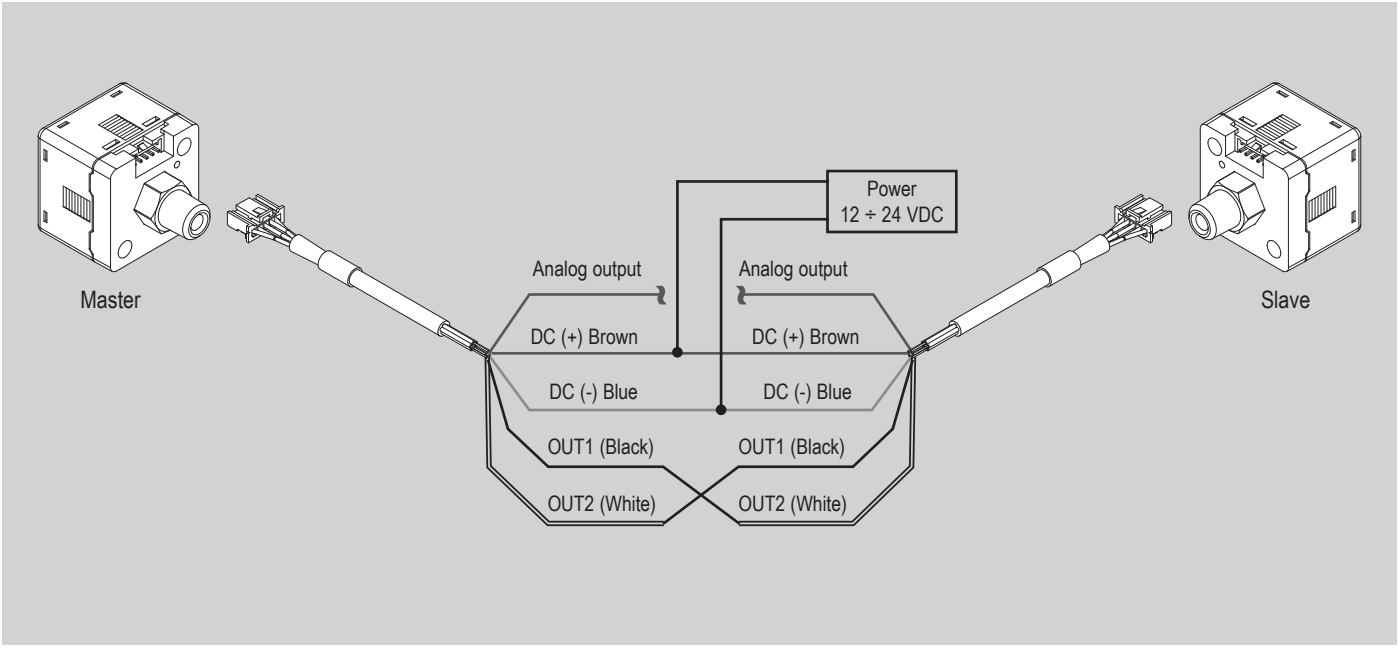

Circuit diagram

Type: **010F3**

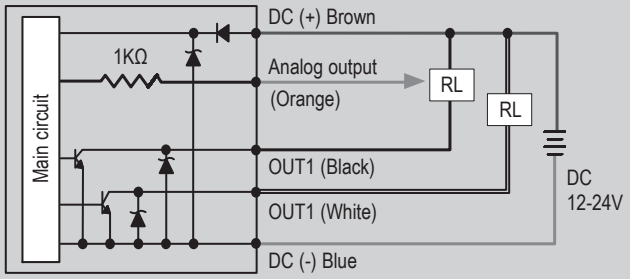

Circuit NPN

Type: **030F3**

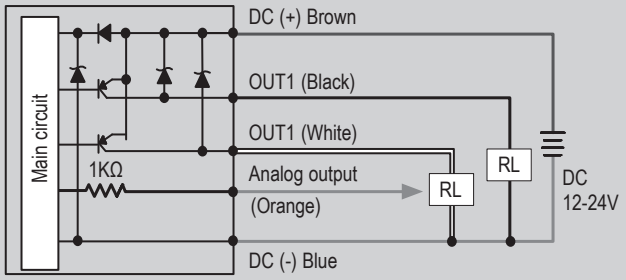

Circuit PNP

Analog output

Type: **AKP43P**

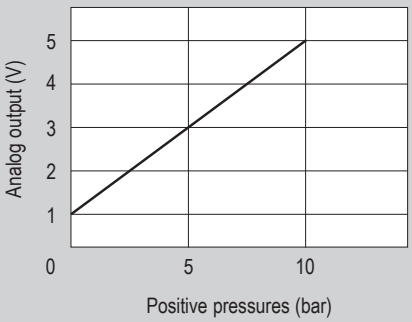

Type: **AKP43V**

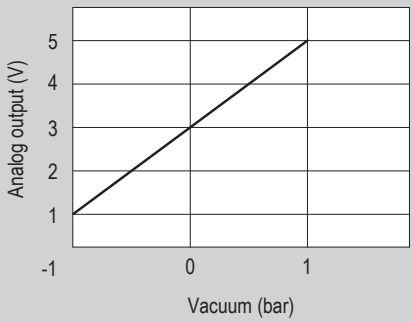

Type: **AKP43C**

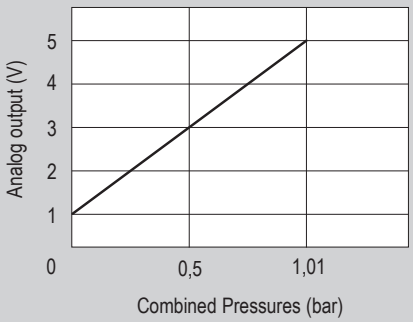

Function

AKP43..

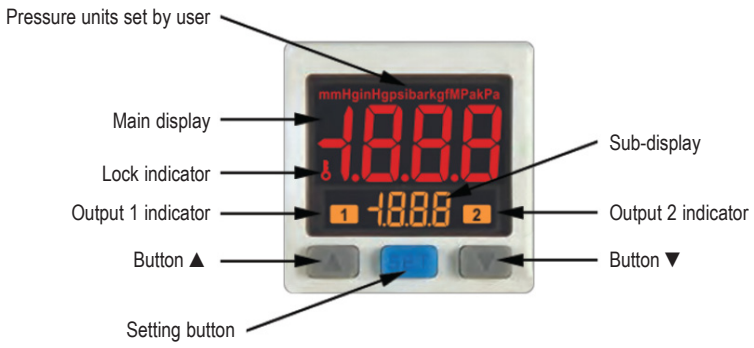

Panel mounting*

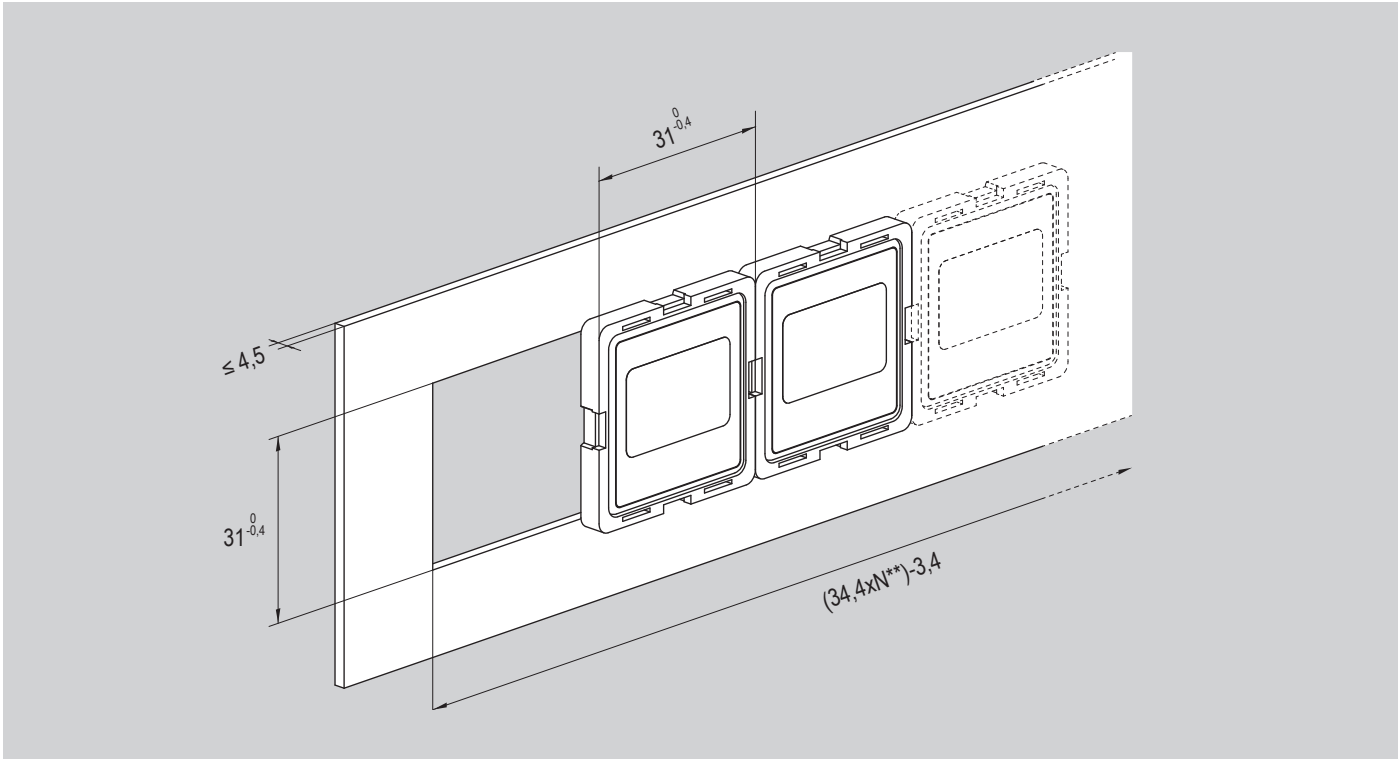

*Possible only with APAD or APAC , see page 3.30.90
**N = number of components to install

Standard dimensions

Type: **AKP43**

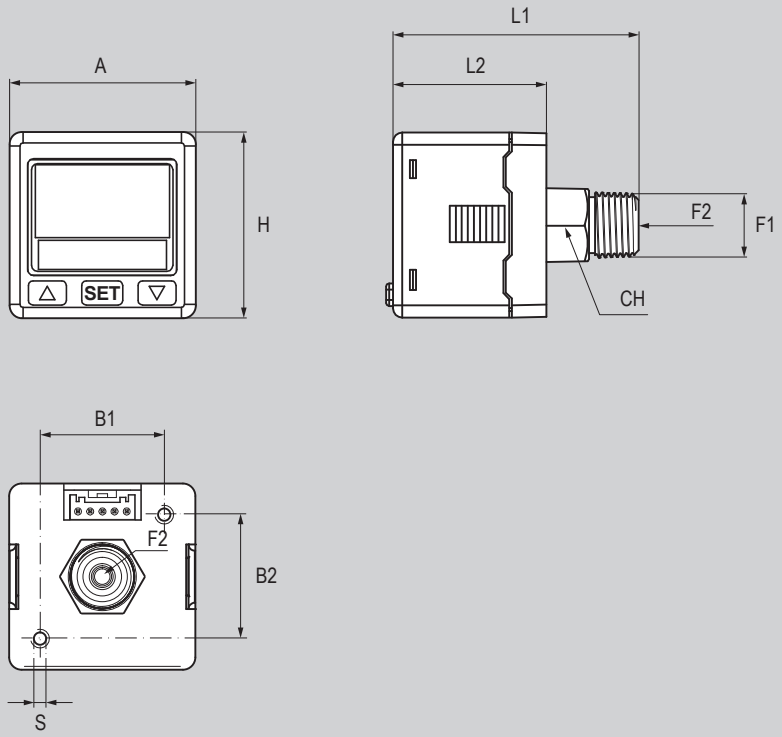

Item	Code	Connections	Function	Circuit	A	B1	B2	CH	F1	F2	H	L1	L2	S	Weight g
AKP43P010F	024810	1/8"-M5	Positive pressures digital switch	NPN	30	20	20	12	G1/8"	M5	30	40,3	25,2	M3	80
AKP43P030F	024811	1/8"-M5		PNP	30	20	20	12	G1/8"	M5	30	40,3	25,2	M3	80
AKP43V010F	024812	1/8"-M5	Vacuum digital switch	NPN	30	20	20	12	G1/8"	M5	30	40,3	25,2	M3	80
AKP43V030F	024813	1/8"-M5		PNP	30	20	20	12	G1/8"	M5	30	40,3	25,2	M3	80
AKP43C010F	024814	1/8"-M5	Combined pressures digital switch	NPN	30	20	20	12	G1/8"	M5	30	40,3	25,2	M3	80
AKP43C030F	024815	1/8"-M5		PNP	30	20	20	14	G1/8"	M5	30	40,3	25,2	M3	80

Straight mounting brackets



Size	Code	Item	Matching
1/8" - 1/4"	024807	ABT5	AKP60..
1/8"	024816	AKP12	AKP43..

Type "L" mounting brackets



Size	Code	Item	Matching
1/8" - 1/4"	024808	ABT6	AKP60..
1/8"	024817	AKP13	AKP43..

Panel adapter



Size	Code	Item	Matching
1/8" - 1/4"	024809	APAC	AKP60.. AKP43..

Panel adapter with front protective liv



Size	Code	Item	Matching
1/8" - 1/4"	024802	APAD	AKP60.. AKP43..

Notes

END-OF-LINE
components



Find out our
key products

- **Solution for most applications**
- **Easy and intuitive choice**
- **Excellent value for money**
- **Wide availability**
- **Fast delivery**

Main features and certifications

End-of-line components. Accessories with different functions to meet a variety of needs in an industrial plant.
Supplied as standard in compliance to Reach and RoHS directives.

Automatic condense drains series A..FLSA, 1/4" ÷ 1/2"

from page 3.40.10



Automatic condense drains, available in size 1/4", 3/8" and 1/2". For installation at the end of the line to grant the drain of the condense accumulating in the system.
With metal cup protection and air interception as standard, and with automatic or manual exhaust option.



Silenced exhaust filters series A..FLFS, 1/4" ÷ 1/2"

from page 3.40.30



Silenced exhaust filters, available in size 1/4", 3/8" and 1/2". For installation at the end of the line to reduce the noise of the system exhaust, recover residual oil and water, and keep the whole system clean.
Supplied complete of mounting bracket



Code key

Series	Size	Type
A	**12**	**FLSA**
A	14 = 1/4"	FLSA = Automatic condense drains
	38 = 3/8"	FLFS = Silenced exhaust filters
	12 = 1/2"	

How to order

Series	Size	Size
A	**12**	**FLSA**

Notes

For standard materials see table below.

Options in the same grid are alternative to each others.

Standard materials

Type: **A..FLSA**

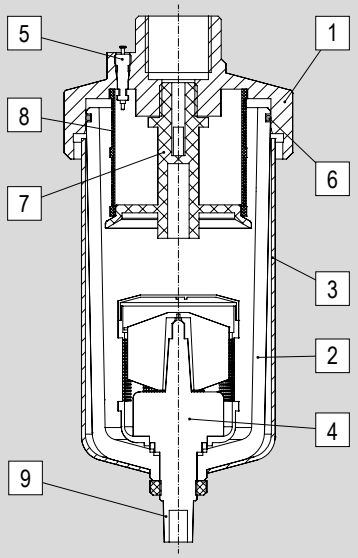

Type: **A..FLFS**

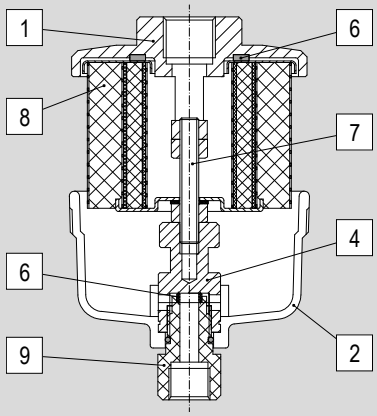

Position	Description	Material	
		A..FLSA	A..FLFS
1	Body	Aluminium	
2	Cup	Polycarbonate	
3	Cup protection	Aluminium	-
4	Drain system	Acetalic resin - NBR	Aluminium alloy (LY12)
5	Air release valve	Acetalic resin - NBR	-
6	Seals	NBR	
7	Support screw	POM	Stainless Steel
8	Filtering element	POM	Noise-absorbing fiber with metal protection
9	Drain valve	POM	Nylon (PA6)

Accessories

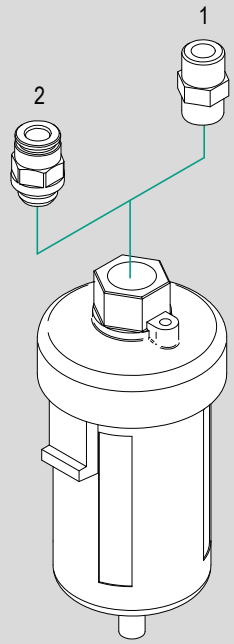

N.	Size	Item	Description	Matching		Code key and data sheet page
				A..FLSA	A..FLFS	
1	1/4" ÷ 1/2"	A..	BSP nipple male/male	●	●	4.35.1
2	1/4" ÷ 1/2"	R..	Push-in fittings	●	●	4.2.1

Key
● matching accessory; – not matching accessory

Main features

Code	Item	Size	Function	Symbol
090295	A14FLSA	1/4"	Automatic condense drain	
090296	A38FLSA	3/8"		
090257	A12FLSA	1/2"		



Technical data

Type	A14FLSA	A38FLSA	A12FLSA
Size	1/4"	3/8"	1/2"
Fluid	Compressed air		
Maximum inlet pressure	15 bar		
Pressione d'esercizio	1,5 ÷ 10 bar		
Temperature range	+5°C ÷ +60°C		
Drain type	Normally open		
Drain operation	Automatic		
Mounting	Vertical		

Operation notes

When any pressure is applied, the float drops and the valve closes the chamber bore. The piston is pushed down by the spring and drainage passes through the elongated chamber bore to enter the housing and be discharged.
When a pressure greater than 1.5 bar is applied in the chamber, it overcomes the spring force, allowing the piston to rise and, adhering to the o-ring, insulates the inside of the chamber from the outside.
When the condense is accumulated the float rises and opens the chamber bore, allowing drainage through its guide.

Standard dimensions

Type: **A..FLSA**

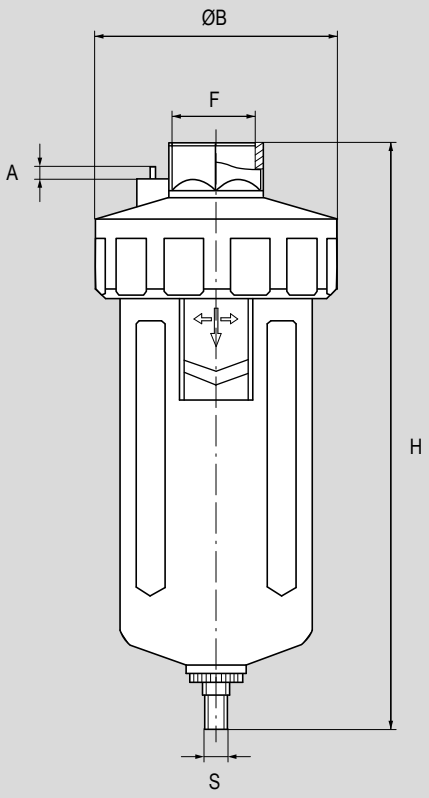

Item	Code	Size	A	ØB	H	F	S	Weight g
A14FLSA	090295	1/4”	2,5	72	175	G1/4"	R1/8"	-
A38FLSA	090296	3/8”	2,5	72	175	G3/8"	R1/8"	-
A12FLSA	090257	1/2”	2,5	72	175	G1/2"	R1/8"	-

Main features

Code	Item	Size	Function	Symbol
090297	A14FLFS	1/4"	Silenced exhaust filters	
090298	A38FLFS	3/8"		
090299	A12FLFS	1/2"		



Technical data

Type	A14FLFS	A38FLFS	A12FLFS
Size	1/4"	3/8"	1/2"
Fluid	Compressed air		
Pressure range	1,5 ÷ 10 bar		
Temperature range	+5°C ÷ +60°C		
Maximum flow rate	200 l/min.	300 l/min.	1000 l/min.
Section	12 mm^2	16 mm^2	55 mm^2
Drain operation	Automatic		
Noise reduce level	35 db		
Oil recovery	99,9%		
Mounting	Vertical		

Operation notes

The component must be installed in vertical position.
The component must not come into contact with, or otherwise be exposed to, aggressive substances or solvents.
For spare parts, please contact the sales department.

Standard dimensions

Type: **A..FLFS**

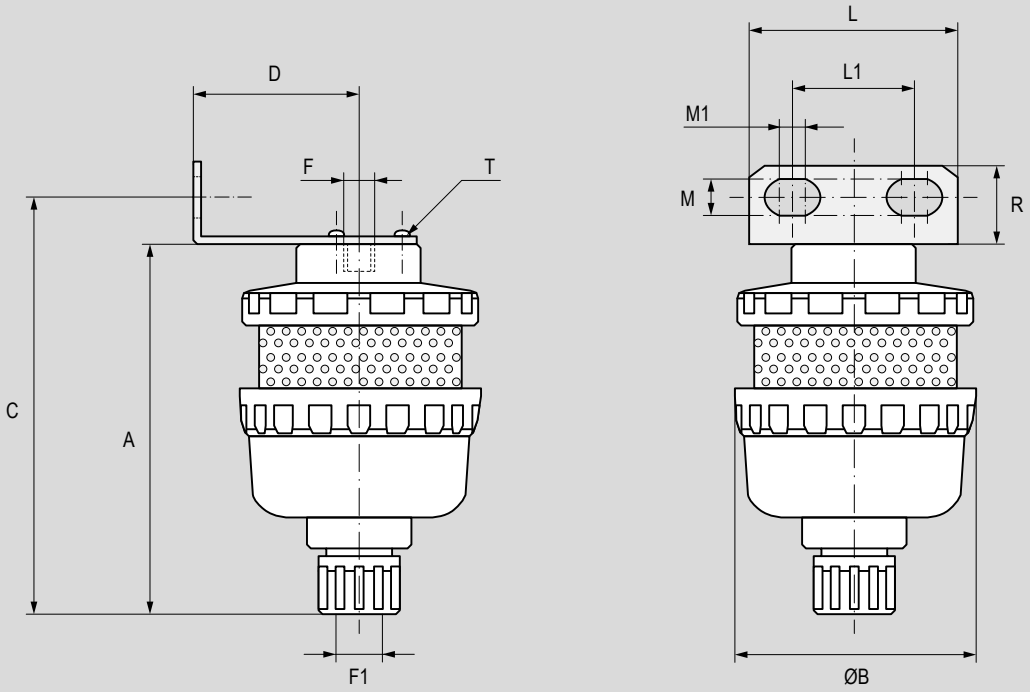

Item	Code	Size	A	ØB	C	D	F	F1	L	L1	M	M1	R	T	Weight g
A14FLFS	090297	1/4”	88	57,5	100	40	G1/4”	G1/4"	50	30	7	5	20	M3x8	120
A38FLFS	090298	3/8”	120,5	76,5	140,5	55	G3/8”	G1/4"	50	30	7	5	30	M3x8	250
A12FLFS	090299	1/2”	173,5	102,5	193,5	70	G1/2”	G1/4"	70	40	7	5	30	M3x8	550

Notes

Mounting bracket included.

MOUNTING
accessories



Find out our
key products

- **Solution for most applications**
- **Easy and intuitive choice**
- **Excellent value for money**
- **Wide availability**
- **Fast delivery**

Main features and certifications

Mounting accessories for modular components, for microregulators and for digital pressure-gauges, vacuum-gauges and pressure switches.
Available in different types and sizes.
Supplied as standard in compliance to Reach and RoHS directives.

Spacers series D, 1/4" ÷ 1"

from page 3.92.1



Spacers for modular components, available in sizes from 1/4" to 1". Equipped with O-ring, allow the mounting of two modular components through the "in"/"out" port. Compatible with all modular components.

Spacers with "T" type porting block series DT, 1/4" ÷ 1"

from page 3.92.1



Spacers with "T" type porting block for modular components, available in sizes from 1/4" to 1". Equipped with O-ring, allow the mounting of two modular components through the "in"/"out" port. Thanks to the threaded "T" connection on the component, it is possible to obtain an air flow detour or apply pressure switches. It can be used for connection between filters type A..F and regulators type A..R, mounted with knob facing the opposite side from the "T" type port.

Spacers with "L" type bracket series DSL, 1/4" ÷ 1"

from page 3.92.2



Spacers with "L" type bracket for modular components, available in sizes from 1/4" to 1". Equipped with O-ring, allow the mounting of two modular components through the "in"/"out" port, and allow also the fastening of the assembly, thanks to the "L" bracket.
Spare brackets to be ordered separately.

Spacers with "T" type bracket series DST, 1/4" ÷ 1"

from page 3.92.3



Spacers with "T" type bracket for modular components, available in sizes from 1/4" to 1". Equipped with O-ring, allow the mounting of two modular components through the "in"/"out" port, and allow also the fastening of the assembly, thanks to the "T" bracket.
Spare brackets to be ordered separately.

Brackets series SR, 1/4" ÷ 1"

from page 3.94.1



Mounting brackets for regulators, filter-regulators and microregulators, available in sizes from 1/4" to 1". Allow the single component panel mounting.

Brackets series SRP, 1/8" ÷ 1/2"

from page 3.94.2



Mounting brackets for precision regulators available in sizes from 1/8" to 1/2". Allow the single component panel mounting.

Brackets series SFL, 1/4" ÷ 1"

from page 3.94.2



Mounting brackets for filters, mist separators and lubricators, available in sizes from 1/4" to 1". Allow the single component panel mounting.

Mounting brackets series ABT and AKP, 1/8" ÷ 1/4"

from page 3.96.1



Mounting brackets for digital pressure-gauges, vacuum-gauges and pressure switches. Compatible with size 1/8" and 1/4". Available in versions straight and type "L". Allow the component panel mounting.

Panel adapters series APAC and APAD, 1/8" ÷ 1/4"

from page 3.96.10



Panel adapters for digital pressure-gauges, vacuum-gauges and pressure switches. Compatible with 1/8" and 1/4". Available in version with or without front protective liv. Allow the component panel mounting.

Brackets matching

Series	Description	Matching								
		A..F (1/4" - 1")	A..FD (1/4" - 1")	A..R (1/4" - 1")	A..RP (1/8" - 1/2")	A..L (1/4" - 1")	A..LG (1/4" - 1")	A..FRR (1/4" - 1")	A..FRRL (1/4" - 1")	VMS.. (1/4" - 1")
D..	Spacers	●	●	●	●	●	●	●	●	●
DT..	Spacers with "T" type porting block	●(1)	-	●(1)	-	-	-	-	-	-
DSL..	Spacers with "L" type bracket	●	●	●	●	●	●	●	●	●
DST..	Spacers with "T" type bracket	●	●	●	●	●	●	●	●	●
SR..	Brackets for regulators, filter-regulators and microregulators	-	-	●	-	-	-	●	●	-
SRP..	Brackets for precision regulators	-	-	-	●	-	-	-	-	-
SFL..	Brackets for filters, mist separators and lubricators	●	●	-	-	●	-	-	-	-
ABT5	Straight brackets for digital pressure-gauges and vacuum-gauges	-	-	-	-	-	-	-	-	-
ABT6	Type "L" brackets for digital pressure-gauges and vacuum-gauges	-	-	-	-	-	-	-	-	-
AKP12	Straight brackets for digital pressure switches	-	-	-	-	-	-	-	-	-
AKP13	Type "L" brackets for digital pressure switches	-	-	-	-	-	-	-	-	-
APAC	Panel adapters for digital pressure-gauges, vacuum-gauges and pressure switches	-	-	-	-	-	-	-	-	-
APAD	Panel adapters with front protective liv for digital pressure-gauges, vacuum-gauges and pressure switches	-	-	-	-	-	-	-	-	-

Key

● allowed matching; - not allowed matching

(1) Between filter and regulator only, the regulator with knob facing the opposite side from the "T" type port.

Matching														See page
AVP..E (1/4" - 1/2")	AVP..P (1/4" - 1/2")	A..F (1 1/2" - 2")	A..R (1 1/2" - 2")	A..L (1 1/2" - 2")	AC700 (1/8" - 1/4")	M	MR	MF	MP	AKP60	AKP43	A..FLSA	A..FLFS	
●	●	-	-	-	-	-	-	-	-	-	-	-	-	3.92.1
-	-	-	-	-	-	-	-	-	-	-	-	-	-	3.92.1
●	●	-	-	-	-	-	-	-	-	-	-	-	-	3.92.2
●	●	-	-	-	-	-	-	-	-	-	-	-	-	3.92.3
-	-	-	-	-	●	-	-	-	-	-	-	-	-	3.94.1
-	-	-	-	-	-	-	-	-	-	-	-	-	-	3.94.2
-	-	-	-	-	-	-	-	-	-	-	-	-	-	3.94.2
-	-	-	-	-	-	-	-	-	-	●	-	-	-	3.96.1
-	-	-	-	-	-	-	-	-	-	●	-	-	-	3.96.1
-	-	-	-	-	-	-	-	-	-	-	●	-	-	3.96.2
-	-	-	-	-	-	-	-	-	-	-	●	-	-	3.96.2
-	-	-	-	-	-	-	-	-	-	●	●	-	-	3.96.10
-	-	-	-	-	-	-	-	-	-	●	●	-	-	3.96.10

Notes

Main features

1/4" ÷ 1" — Sizes

D.. — Type



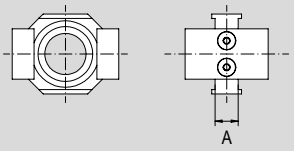

Technical data

Type	Description	Material	Seal
D..	Spacer for modular components, with O-ring. Compatible with all modular components.	Painted aluminium	NBR

Dimensions

Size	Code	Item	A	Weight (g)
1/4”	090148	D14	10	-
3/8”	090149	D38	11	-
1/2”	090150	D12	14	-
1”	090151	D01	15	-

Main features

1/4" ÷ 1" — Sizes

DT.. — Type



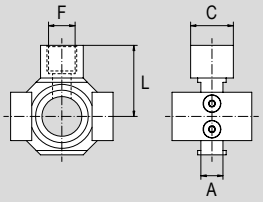

Technical data

Type	Description	Material	Seal
DT..	Spacer with "T" type porting block for modular components, with O-ring. The "T" connection allows the airflow detour or to apply pressure switches. For mounting on the lubricator type A..L, the spacer is to be applied on the "out" port only. Not compatible with filter-regulators type A..FRR.	Painted aluminium	NBR

Dimensions

Size	Code	Item	A	C	F	L	Weight (g)
1/4”	090129	DT14	10	19	G1/4”	29	-
3/8”	090130	DT38	11	19	G1/4”	33	-
1/2”	090131	DT12	14	24	G3/8”	39	-
1”	090132	DT01	15	30	G1/2”	50,5	-

Main features

1/4" ÷ 1" — Sizes

DSL.. — Type



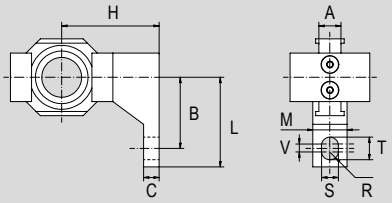

Technical data

Type	Description	Material	Seal
DSL..	Spacer with "L" type bracket for modular components, with O-ring. Compatible with all modular components.	Painted aluminium	NBR

Dimensions

Size	Code	Item	A	B	C	H	L	M	R	S	T	V	Weight (g)
1/4"	090133	DSL14	10	24	5	30	33	15	2,75	5,5	8,5	3	-
3/8"	090134	DSL38	11	35	7	41	45	16	3,5	7	11	4	-
1/2"	090135	DSL12	14	40	7	50	50	22	4,5	9	13	4	-
1"	090136	DSL01	15	50	10,5	69,8	63	23	6	12	16	4	-

Main features

1/4" ÷ 1" — Sizes

SL.. — Type



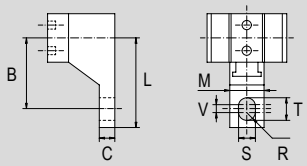

Technical data

Type	Description	Material
SL..	"L" type bracket. Spare part for spacer with "L" type bracket type DSL..	Painted aluminium

Dimensions

Size	Code	Item	B	C	L	M	R	S	T	V	Weight (g)
1/4"	090163	SL14	24	5	33	15	2,75	5,5	8,5	3	-
3/8"	090164	SL38	35	7	45	16	3,5	7	11	4	-
1/2"	090165	SL12	40	7	50	22	4,5	9	13	4	-
1"	090166	SL01	50	10,5	63	23	6	12	16	4	-

Main features

1/4" ÷ 1" — Sizes

DST.. — Type



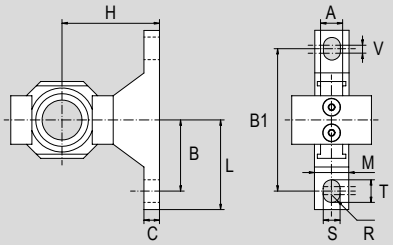

Technical data

Type	Description	Material	Seal
DST..	Spacer with "T" type bracket for modular components, with O-ring. Compatible with all modular components.	Painted aluminium	NBR

Dimensions

Size	Code	Item	A	B	B1	C	H	L	M	R	S	T	V	Weight (g)
1/4"	090137	DST14	10	24	48	5	30	33	15	2,75	5,5	8,5	3	-
3/8"	090138	DST38	11	35	70	7	41	45	16	3,5	7	11	4	-
1/2"	090139	DST12	14	40	80	7	50	50	22	4,5	9	13	4	-
1"	090140	DST01	15	50	100	10,5	69,8	63	23	6	12	16	4	-

Main features

1/4" ÷ 1" — Sizes

ST.. — Type



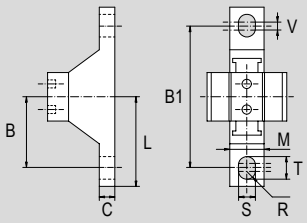

Technical data

Type	Description	Material
ST..	"T" type bracket. Spare part for spacer with "T" type bracket type DST..	Painted aluminium

Dimensions

Size	Code	Item	B	B1	C	L	M	R	S	T	V	Weight (g)
1/4"	090167	ST14	24	48	5	33	15	2,75	5,5	8,5	3	-
3/8"	090168	ST38	35	70	7	45	16	3,5	7	11	4	-
1/2"	090169	ST12	40	80	7	50	22	4,5	9	13	4	-
1"	090170	ST01	50	100	10,5	63	23	6	12	16	4	-

Notes

Main features

1/4" ÷ 1" — Sizes

SR.. — Type



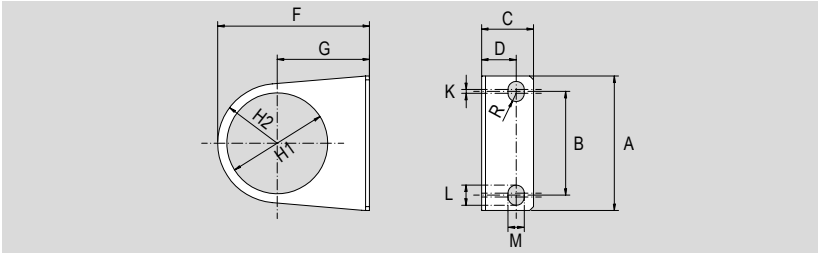

Technical data

Type	Description	Material
SR..	Brackets for regulators and filter-regulators. Allow the panel mounting of the single component. Compatible with type A..R and A..FRR.	Zinc-plated steel

Dimensions

Size	Code	Item	A	B	C	D	F	G	H1	H2	K	L	M	R	Weight (g)
1/4"	090141	SR14	55	34	25	19	50	30	33,5	20	1	15	5,4	2,7	-
3/8"	090142	SR38	53	40	21,5	14	64	39	42,5	25	1,5	8	6,5	3,25	-
1/2"	090143	SR1201	70	54	27	18	79,2	49,2	52,5	30	2	10,5	8,5	4,25	-
1"															

Main features

1/8" ÷ 1/4" — Sizes

SR700 — Type



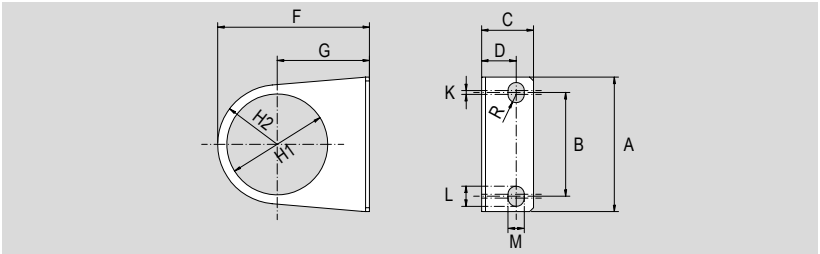

Technical data

Type	Description	Material
SR700	Brackets for microregulators. Allow the panel mounting of the single component. Compatible with type AC700	Zinc-plated steel

Dimensions

Size	Code	Item	A	B	C	D	F	G	H1	H2	K	L	M	R	Weight (g)
1/8"	090308	SR700	44,5	24	20	12	55,5	35,5	30	20	6	12	6	3	-
1/4"															

Main features

1/8" ÷ 1/2" **SRP..**

Sizes Type



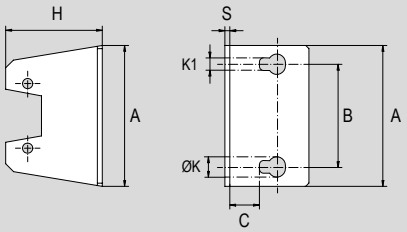

Technical data

Type	Description	Material
SRP..	Brackets for precision regulators. Allow the panel mounting of the single component. Compatible with type A..RP	Zinc-plated steel

Dimensions

Size	Code	Item	A	B	C	H	ØK	K1	S	Weight (g)
1/8"	090315	SRP18	42	28	7	25	8,5	4,5	2	20
1/4"	090316	SRP14	50	36	8	30	9,5	5,5	2	30
1/2"	090317	SRP12	82	60	5	23	15,5	9	2,3	50

Main features

1/4" ÷ 1" **SFL..**

Sizes Type



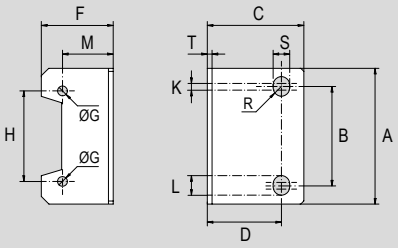

Technical data

Type	Description	Material
SFL..	Brackets for filters, mist separators and lubricators. Allow the panel mounting of the single component. Compatible with type A..F, type A..FD and type A..L.	Zinc-plated steel

Dimensions

Size	Code	Item	A	B	C	D	F	ØG	H	K	L	M	R	S	T	Weight (g)
1/4"	090144	SFL14	40	27	33	27	18	4,5	26	3	8,4	14	2,7	5,4	2,3	-
3/8"	090145	SFL38	53	40	39	32	22,5	4,5	35	1,5	8	19	3,25	6,5	2,3	-
1/2"	090146	SFL12	70	54	47	38	31,5	5,5	47	2	10,5	20	4,25	8,5	2,3	-
1"	090147	SFL01	90	66	64	52	43	6,5	60	2	13	29	5,5	11	3,2	-

Main features

1/8" ÷ 1/4" **ABT5**

Sizes Type



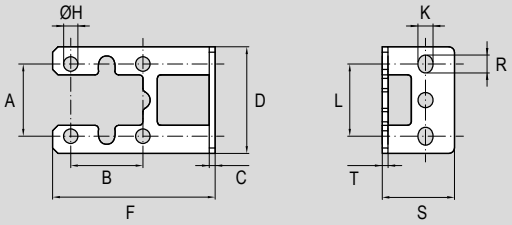

Technical data

Type	Description	Material
ABT5	Straight mounting brackets for digital pressure-gauges and vacuum-gauges. Allow the panel mounting of the single component. Compatible with all series AKP60. The kit include two mounting screws for fixing the component to the bracket.	Zinc-plated steel

Dimensions

Size	Code	Item	A	B	C	D	F	ØH	K	L	R	S	T	Weight (g)
1/8"	024807	ABT5	20	20	1,6	29,5	45	4	4,2	20	5	20	1,6	-
1/4"														

Main features

1/8" ÷ 1/4" **ABT6**

Sizes Type



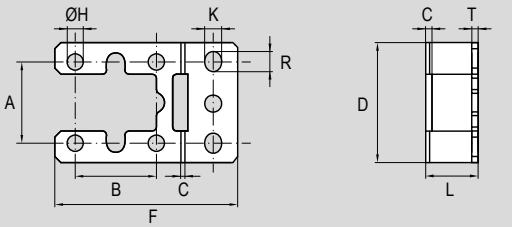

Technical data

Type	Description	Material
ABT6	Type "L" mounting brackets for digital pressure-gauges and vacuum-gauges. Allow the panel mounting of the single component. Compatible with all series AKP60. The kit include two mounting screws for fixing the component to the bracket.	Zinc-plated steel

Dimensions

Size	Code	Item	A	B	C	D	F	ØH	K	L	R	T	Weight (g)
1/8"	024808	ABT6	20	20	1,6	29,5	45	4	4,2	13	5	1,6	-
1/4"													

Main features

1/8" — Sizes

AKP12 — Type



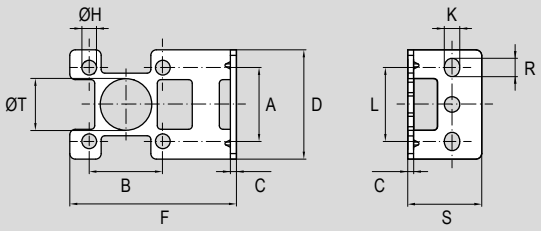

Technical data

Type	Description	Material
AKP12	Straight mounting brackets pressure switches. Allow the panel mounting of the single component. Compatible with all series AKP43. The kit include two mounting screws for fixing the component to the bracket.	Zinc-plated steel

Dimensions

Size	Code	Item	A	B	C	D	F	ØH	K	L	R	S	ØT	Weight (g)
1/8"	024816	AKP12	20	20	2	29,5	45	4	4,2	20	5	20	14	-

Main features

1/8" — Sizes

AKP13 — Type



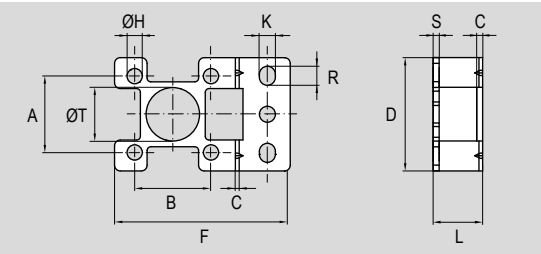

Technical data

Type	Description	Material
AKP13	Type "L" mounting brackets pressure switches. Allow the panel mounting of the single component. Compatible with all series AKP43. The kit include two mounting screws for fixing the component to the bracket.	Zinc-plated steel

Dimensions

Size	Code	Item	A	B	C	D	F	ØH	K	L	R	S	ØT	Weight (g)
1/8"	024817	AKP13	20	20	2	29,5	45	4	4,2	13	5	2	14	-

Main features

1/8" ÷ 1/4" **APAC**

Sizes Type



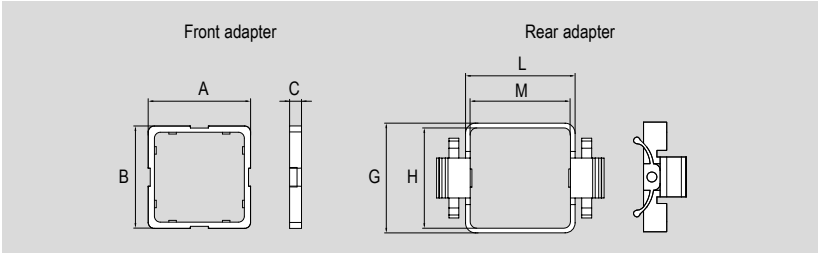

Technical data

Type	Description	Material
APAC	Panel adapter for digital pressure-gauges, vacuum-gauges and pressure switches. Compatible with all series AKP60 and AKP43. Allow the panel mounting of the component, both single and multiple. For information about mounting, see page 3.30.41 (for series AKP60) and page 3.30.62 (for series AKP43).	Polymer

Dimensions

Size	Code	Item	A	B	C	G	H	L	M	Weight (g)
1/8"	024809	APAC	34,4	34,4	4	33	30,2	33	30,2	-
1/4"										

Main features

1/8" ÷ 1/4" **APAD**

Sizes Type



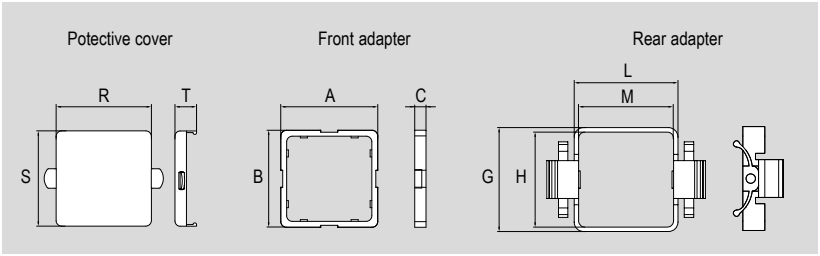

Technical data

Type	Description	Material
APAD	Panel adapter with front protective liv for digital pressure-gauges, vacuum-gauges and pressure switches. Compatible with all series AKP60 and AKP43. Allow the panel mounting of the component, both single and multiple, also offering a screen protection. For information about mounting, see page 3.30.41 (for series AKP60) and page 3.30.62 (for series AKP43).	Polymer

Dimensions

Size	Code	Item	A	B	C	G	H	L	M	R	S	T	Weight (g)
1/8"	024802	APAD	34,4	34,4	4	33	30,2	33	30,2	34,4	34,4	8,5	-
1/4"													

Notes

ACCESSORIES

CHAPTER 4



Fittings and couplings

Series		Type	Page
Push-in fittings		R, RHP, RT	4.2.1
Rapid fittings		C	4.20.1
Compression fittings		O	4.25.1
Standard fittings		A	4.35.1
Quick-lock couplings		KA, SF	4.40.1

System accessories

Series		Type	Page
Pressure boosters		MLTR, MLTP	4.50.1
Multiple connectors		A013P, A113P, A213P	4.55.1
Collectors		RX, RY, RZ, RR	4.60.1
Tubes		TR, TPU, TP, TN, SR, SPU, FS, FW	4.65.1
Tube cutters		PTP, PTM, TSC	4.65.1
Blow guns		AH, AN, AM, AR, AT	4.65.1
Washers		RA, RN, RR, RF, RB	4.65.1

Air-reservoirs

Series		Type	Page
Steel air-reservoirs		SBCV	4.70.1
Accessories for air-reservoirs		STSB, PRSB, VCSB	4.70.100

Flow and exhaust regulators

Page 4.90.1

Series		Type	Page
In-line flow regulators		V52, V53, V54	4.92.1
Flow regulators for cylinders		V14, V15, V18, V19, V28, V36, V37, V38, V39, V41	4.94.1
Silenced exhaust restrictors		AVE, AVS, AVL, AVT, AVC, AR07	4.97.1
Exhaust restrictors		ASN, ASE, AR	4.99.1

Accessories with integrated function

Pag. 4.120.1

Series		Type	Page
Fittings with non return valve		V56	4.121.10
Stop fittings		V59	4.121.20
Pressure regulators		V47	4.122.10
Unidirectional pressure regulators		V57, V58	4.122.20
Pneumatic switches		V46	4.123.10
In-line pneumatic switches		V48	4.123.20
Circuit selectors		V60	4.124.10
In-line pressure-gauges		V51	4.125.10
Adjustable pressure switches		PR	4.126.10
Stop valves		V45	4.127.10
Throttle fittings		V44	4.128.10
Slow starters		V61	4.129.10
Threshold sensors		V62	4.130.10

Silencers

Page 4.150.1

Series		Type	Page
Plastic silencers		SPD, SPF, SPS, AS19, AS22	4.151.10
Sintered silencers		AC, ACQ, AE, AEA, AEB, ACT, ACI, AEP, AFE, AP, AT, ATT	4.153.10
Metal silencers		MI, M, MR, MD	4.155.10

Exhaust conveyors

Series		Type	Page
Exhaust conveyors		CSC1	4.170.1

Notes

PUSH-IN
fittings



Find out our
key products

- **Solution for most applications**
- **Easy and intuitive choice**
- **Excellent value for money**
- **Wide availability**
- **Fast delivery**

Main features and certifications

Push-in fittings in nickel-plated brass, for high pressures, and main body in acetalic resin (POM).
Available in many versions, threads and tube diameters.
Supplied as standard in compliance to Reach and RoHS directives.

Series R

from page 4.3.1



Series of push-in fittings in nickel-plated brass, with reduced dimensions, for connecting Nylon and Polyurethane tubes, with new collet and release collet design. Available in different configurations, with taper BSPT threads and BSP with O-ring, in various sizes. Stud threaded versions are supplied as standard with internal and external hexagonal wrench (for narrow places mounting).

Series RHP

from page 4.5.1



Series of push-in fittings in nickel-plated brass for high pressures, suitable for use in the lubrication field. They can be used up to 250 bar.Available in different configurations, with taper BSPT threads, in various sizes.

Series RT

from page 4.7.1



Series of push-in fittings in acetalic resin (POM), with reduced dimensions, for connecting Nylon and Polyurethane tubes, with new collet and release collet design. Available in different configurations, with taper BSPT threads and BSP with O-ring, in various sizes. Stud threaded versions are supplied as standard with internal and external hexagonal wrench (for narrow places mounting).







Code key

Series	Type*	Ø Tube*	Thread (or Ø Tube 2)*	Seals option
R	**11**	**08**	**18**	**V**
R	11, 12, 13, 14, 15, 17, 18, 19, 21, 22, 23, 25, 26, 27, 27F, 29, 31, 32, 35, 36, 38, 39, 40, 41, 42, 43, 44, 51, 52, 53, 57, 59, 60, 61, 62, 63, 64, 65	03 = Ø 3 mm 04 = Ø 4 mm 06 = Ø 6 mm 08 = Ø 8 mm 10 = Ø 10 mm 12 = Ø 12 mm 14 = Ø 14 mm 16 = Ø 16 mm	M3 = M3x0,5 M5 = M5x0,8 M6 = M6x1 M7 = M7x1 12x1,25 = M12x1,25 12x1,5 = M12x1,5 18 = 1/8" 14 = 1/4" 38 = 3/8" 12 = 1/2" 34 = 3/4"	V = FKM (-10°C ÷ +150°C)

Notes

For standard materials see the table below.

* For matching between fitting type, tube diameter and thread, see from page 4.3.2; for the specific type, see the following pages.

How to order

Series	Type	Ø Tube	Thread	Option
R	**11**	**08**	**18**	**V**

Technical data

Version		Series R
Fluid		Compressed air
Maximum pressure		20 bar
Vacuum		-99 KPa
Temperature range		-20°C ÷ +80°C (standard) -10°C ÷ +150°C (V)
Parallel threads		UNI - ISO 228 / 1 (BSP)
Taper threads		UNI EN 10226-1 (BSPT)
Metric threads		UNI EN ISO 965-1
Tubes		Calibrated Nylon (PA6), PU and Rilsan (PA11)
Tubes tolerance	Ø 3 mm ÷ Ø 10 mm	±0,07 mm
	Ø 12 mm ÷ Ø 16 mm	±0,1 mm

Standard materials

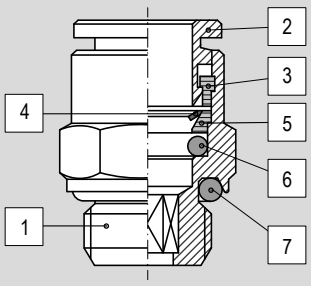

Position	Description	Material
1	Body	Nickel-plated brass
2	Release collar	Nickel-plated brass
3	Sealing ring	Acetalic resin (POM)
4	Collet	Stainless Steel AISI 301
5	Protection ring	Acetalic resin (POM)
6, 7	Seals	NBR

Fittings series R

Type			Taper threads (BSPT)	Parallel threads (BSP)	Metric threads	For tube Ø mm	Stem Ø mm	Data sheet and code page
R11	BSPT stud		1/8", 1/4", 3/8", 1/2"	-	-	4, 6, 8, 10, 12, 14	-	4.3.4
R12	BSP stud		-	1/8", 1/4", 3/8", 1/2", 3/4"	M3x0,5, M5x0,8, M6x1, M7x1, M12x1,25, M12x1,5	3, 4, 6, 8, 10, 12, 14, 16	-	4.3.5
R13	Female BSP stud		-	1/8", 1/4", 3/8", 1/2"	-	4, 6, 8, 10, 12	-	4.3.4
R25	Reducer		-	-	-	3, 4, 6, 8, 10, 12, 14	4, 6, 8, 10, 12, 14, 16	4.3.6
R38	BSP stem adapter		-	1/8", 1/4", 3/8", 1/2"	M5x0,8	-	4, 6, 8, 10, 12	4.3.6
R27	Bulkhead		-	-	-	3, 4, 6, 8, 10, 12	-	4.3.7
R27F	Female bulkhead		-	1/8", 1/4", 3/8"	-	6, 8, 10	-	4.3.7
R26	Union		-	-	-	3, 4, 6, 8, 10, 12, 14, 16	-	4.3.8
R39	Stem		-	-	-	-	4, 6, 8, 10, 12, 14	4.3.8
R29	Plug		-	-	-	-	3, 4, 6, 8, 10, 12, 14, 16	4.3.9
R14	BSPT elbow		1/8", 1/4", 3/8"	-	-	4, 6, 8, 10	-	4.3.9
R15	BSPT swivel elbow		1/8", 1/4", 3/8", 1/2"	-	-	4, 6, 8, 10, 12, 14	-	4.3.10
R41	BSP swivel elbow		-	1/8", 1/4", 3/8", 1/2", 3/4"	M5x0,8, M6x1, M12x1,25, M12x1,5	3, 4, 6, 8, 10, 12, 14, 16	-	4.3.11
R17	Female BSP elbow		-	1/8", 1/4", 3/8"	-	4, 6, 8, 10	-	4.3.10
R40	45° BSP swivel elbow		-	1/8", 1/4", 3/8", 1/2"	-	6, 8, 10, 12	-	4.3.12
R52	Extended BSP swivel elbow		-	1/8", 1/4"	-	4, 6, 8	-	4.3.12
R19	BSP swivel elbow with hexagonal wrench		-	1/8", 1/4", 3/8", 1/2"	M3x0,5, M5x0,8	3, 4, 6, 8, 10, 12	-	4.3.13
R53	Double BSP swivel elbow with hexagonal wrench		-	1/8", 1/4"	M5x0,8	4, 6, 8	-	4.3.13
R61	Stem elbow		-	-	-	4, 6, 8, 10	4, 6, 8, 10	4.3.14
R18	Equal elbow		-	-	-	3, 4, 6, 8, 10, 12, 14, 16	-	4.3.14
R42	BSPT swivel tee		1/8", 1/4", 3/8", 1/2"	-	-	4, 6, 8, 10, 12	-	4.3.15
R43	BSP swivel tee		-	1/8", 1/4", 3/8", 1/2"	-	4, 6, 8, 10, 12	-	4.3.15
R21	BSP swivel tee with hexagonal wrench		-	1/8", 1/4", 3/8", 1/2"	M5x0,8	4, 6, 8, 10, 12	-	4.3.16

Fittings series R

Type			Taper threads (BSPT)	Parallel threads (BSP)	Metric threads	For tube Ø mm	Stem Ø mm	Data sheet and code page
R57	Double BSP swivel tee with hexagonal wrench		-	1/8", 1/4"	M5x0,8	4, 6, 8	-	4.3.16
R62	Stem tee		-	-	-	4, 6, 8, 10	4, 6, 8, 10	4.3.17
R22	BSPT swivel side tee		1/8", 1/4", 3/8", 1/2"	-	-	4, 6, 8, 10, 12	-	4.3.17
R44	BSP swivel side tee		-	1/8", 1/4", 3/8", 1/2"	-	4, 6, 8, 10, 12	-	4.3.18
R63	Stem side tee		-	-	-	4, 6, 8, 10	4, 6, 8, 10	4.3.18
R23	Equal tee		-	-	-	3, 4, 6, 8, 10, 12, 14, 16	-	4.3.19
R51	Y piece		-	-	-	3, 4, 6, 8, 10, 12	-	4.3.19
R64	Equal H swivel union		-	-	-	4, 6, 8	-	4.3.20
R65	Y swivel piece		-	-	-	4, 6, 8	-	4.3.20
R31	Single hollow bolt		-	1/8", 1/4", 3/8", 1/2"	M5x0,8	-	-	4.3.21
R32	Double hollow bolt		-	1/8", 1/4", 3/8", 1/2"	-	-	-	4.3.21
R59	Single M/F banjo bolt		-	1/8", 1/4", 3/8"	-	-	-	4.3.22
R60	Double M/F banjo bolt		-	1/8", 1/4", 3/8"	-	-	-	4.3.22
R35	Single banjo		-	-	-	4, 6, 8, 10, 12	-	4.3.23
R36	Double banjo		-	-	-	4, 6, 8, 10, 12	-	4.3.23

Thread/Tube matching

External Tube Ø	Thread														
	M3x05	M5x0,8	M6x1	M7x1	M12x1,25	M12x1,5	G1/8"	G1/4"	G3/8"	G1/2"	G3/4"	R1/8"	R1/4"	R3/8"	R1/2"
Ø 3 mm	●	●	-	-	-	-	-	-	-	-	-	-	-	-	-
Ø 4 mm	-	●	●	●	-	-	●	●	-	-	-	●	●	-	-
Ø 6 mm	-	●	●	●	●	●	●	●	●	●	-	●	●	●	-
Ø 8 mm	-	-	-	-	-	-	●	●	●	●	-	●	●	●	●
Ø 10 mm	-	-	-	-	-	-	●	●	●	●	-	●	●	●	●
Ø 12 mm	-	-	-	-	-	-	-	-	●	●	-	-	●	●	●
Ø 14 mm	-	-	-	-	-	-	-	-	●	●	-	-	-	●	●
Ø 16 mm	-	-	-	-	-	-	-	-	-	●	●	-	-	-	-

Key
● available matching; - not available matching

Main features

Type	Description
R11	BSPT stud. In nickel-plated brass.





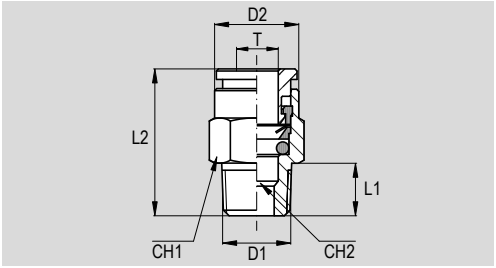

Dimensions

Code	Item	T (ØTube)	D1	D2	L1	L2	CH1	CH2	Weight (g)
020001	R 11 04 18	4	R1/8”	9	7,5	16	10	3	5,5
020002	R 11 04 14	4	R1/4”	9	11	20,5	14	3	16,1
020005	R 11 06 18	6	R1/8”	12	7,5	21	12	4	8,7
020006	R 11 06 14	6	R1/4”	12	11	20,5	14	4	15,8
020573	R 11 06 38	6	R3/8”	12	11,5	21	17	4	-
020007	R 11 08 18	8	R1/8”	14	7,5	25	14	6	13,2
020008	R 11 08 14	8	R1/4”	14	11	23,5	14	6	13,9
020009	R 11 08 38	8	R3/8”	14	11,5	22,5	17	6	23,6
020574	R 11 08 12	8	R1/2”	13,9	14	25	22	6	-
020575	R 11 10 18	10	R1/8”	15,9	7,5	28	16	6	-
020010	R 11 10 14	10	R1/4”	16	11	30,5	16	8	20,2
020011	R 11 10 38	10	R3/8”	16	11,5	24	17	8	20
020016	R 11 10 12	10	R1/2”	16	14	27	22	8	47,5
020017	R 11 12 14	12	R1/4”	19	11	32	19	8	28,5
020012	R 11 12 38	12	R3/8”	19	11,5	27,5	19	10	24,1
020013	R 11 12 12	12	R1/2”	19	14	27,5	22	10	42,3
020014	R 11 14 38	14	R3/8”	22	11,5	35,5	22	10	40,1
020015	R 11 14 12	14	R1/2”	22	14	32,5	22	12	39,5

Main features

Type	Description
R13	Female BSP stud. In nickel-plated brass.



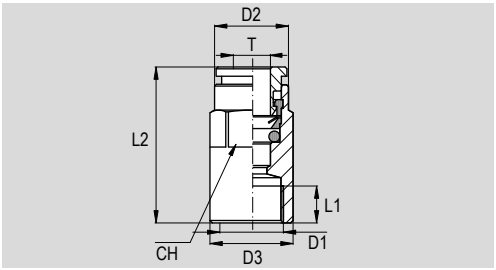

Dimensions

Code	Item	T (ØTube)	D1	D2	D3	L1	L2	CH	Weight (g)
020061	R 13 04 18	4	G1/8”	9	13	7	23,5	9	10
020064	R 13 06 18	6	G1/8”	12	14	7	26	12	15,1
020065	R 13 06 14	6	G1/4”	12	16	10	30	12	18,5
020066	R 13 08 18	8	G1/8”	13,7	16	7	26	14	17,5
020067	R 13 08 14	8	G1/4”	14	16	10	30	14	20,2
020250	R 13 08 38	8	G3/8”	14	20	11	31	14	25,9
020068	R 13 10 14	10	G1/4”	16	18,5	10	32	16	24,4
020069	R 13 10 38	10	G3/8”	16	20	11	33,5	16	30,3
020260	R 13 10 12	10	G1/2”	16	25	11	36,5	16	45
020576	R 13 12 38	12	G3/8”	19	23,1	11	34	20	38,3
020577	R 13 12 12	12	G1/2”	18,8	25	11	37	19	50,9

Main features

Type	Description
R12	BSP stud. In nickel-plated brass.



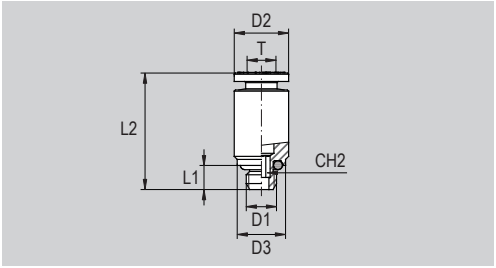

Dimensions

Code	Item	T (ØTube)	D1	D2	D3	L1	L2	CH2	Weight (g)
020029	R 12 03 M3	3	M3x0,5	6,5	5,5	3	15,5	1,5	1,4
020030	R 12 03 M5	3	M5x0,8	6,5	7	4	15,8	2	2,3
020031	R 12 04 M5	4	M5x0,8	9	8	4	19	2,5	4,4
020032	R 12 04 M6	4	M6x1	9	9	4,5	20	3	4,3
020188	R 12 04 M7	4	M7x1	9	9	5	20	3	5
020051	R 12 06 M5	6	M5x0,8	12	8	4	22,2	2,5	8,6
020052	R 12 06 M6	6	M6x1	12	9	4,5	22,8	3	8,9
020189	R 12 06 M7	6	M7x1	12	9	5	23	3	9,5

Main features

Type	Description
R12	BSP stud. In nickel-plated brass.



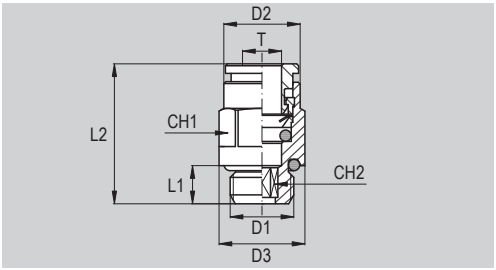

Dimensions

Code	Item	T (ØTube)	D1	D2	D3	L1	L2	CH1	CH2	Weight (g)
020033	R 12 04 18	4	G1/8"	9	13	5	16,5	9	3	6,1
020034	R 12 04 14	4	G1/4"	9	16	6,5	18,5	9	3	12
020049	R 12 06 12x1,25	6	M12x1,25	12	15	6,5	21	12	4	11,8
020050	R 12 06 12x1,5	6	M12x1,5	12	15	6,5	21	12	4	12,9
020037	R 12 06 18	6	G1/8"	12	13,5	5	19,5	12	4	9,1
020038	R 12 06 14	6	G1/4"	12	16	6,5	19,5	12	4	12,7
020578	R 12 06 38	6	G3/8"	11,9	20	7	20,5	12	4	-
020579	R 12 06 12	6	G1/2"	11,9	25	8,5	22,5	12	4	-
020039	R 12 08 18	8	G1/8"	14	14,5	5	23,5	13	6	11,5
020040	R 12 08 14	8	G1/4"	14	16	6,5	21,5	14	6	13,9
020041	R 12 08 38	8	G3/8"	14	20	7	21	14	6	20,1
020247	R 12 08 12	8	G1/2"	14	25	8,5	23	14	6	34,3
020587	R 12 10 18	10	G1/8"	15,9	13	5	26,5	15	8	-
020042	R 12 10 14	10	G1/4"	16	16,5	6,5	27,5	15	8	17,5
020043	R 12 10 38	10	G3/8"	16	20	7	25	16	8	22,6
020053	R 12 10 12	10	G1/2"	16	25	8,5	25,5	16	8	34,5
020054	R 12 12 14	12	G1/4"	19	21	6,5	28,5	19	8	26,2
020044	R 12 12 38	12	G3/8"	19	21	7	28,5	19	10	29
020045	R 12 12 12	12	G1/2"	19	25	8,5	26,5	19	10	36,1
020046	R 12 14 38	14	G3/8"	22	25	7	32	22	10	37,5
020047	R 12 14 12	14	G1/2"	22	25	8,5	32	22	12	42,4
020248	R 12 16 12	16	G1/2"	24	28	8,5	34,5	25	13	53,6
020249	R 12 16 34	16	G3/4"	24	32	9,5	32	24	13	68,2

Main features

Type	Description
R25	Reducer. In nickel-plated brass.



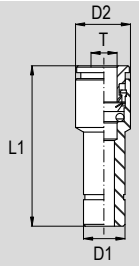

Dimensions

Code	Item	T (ØTube)	D1	D2	L1	Weight (g)
020529	R 25 03 04	3	4	6,5	27,5	2,5
020531	R 25 04 06	4	6	9	33,5	7
020532	R 25 04 08	4	8	9	33,5	10
020533	R 25 04 10	4	10	10	31,5	15
020534	R 25 04 12	4	12	12	32,5	24,5
020548	R 25 06 04	6	4	12	35,5	10
020538	R 25 06 08	6	8	12	35	11,5
020539	R 25 06 10	6	10	12	36,5	16,5
020540	R 25 06 12	6	12	12	35,5	22,2
020545	R 25 06 14	6	14	14	37,5	25
020549	R 25 08 06	8	6	14	39,5	13,5
020541	R 25 08 10	8	10	14	37	15
020542	R 25 08 12	8	12	14	37	15
020546	R 25 08 14	8	14	14	38,5	31,5
020543	R 25 10 12	10	12	16	42	20
020544	R 25 10 14	10	14	16	42	29,5
020547	R 25 12 14	12	14	19	43	24
020597	R 25 14 16	14	16	22	49,5	91,8

Main features

Type	Description
R38	BSP stem adapter. In nickel-plated brass.



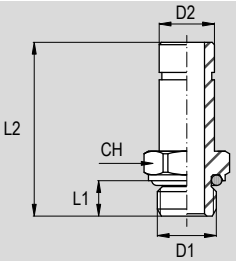

Dimensions

Code	Item	D1	D2	L1	L2	CH	Weight (g)
020791	R 38 04 M5	M5x0,8	4	4	26	9	3,2
020792	R 38 04 18	G1/8”	4	5	28	13	7,3
020793	R 38 04 14	G1/4”	4	6,5	29,5	16	12,4
020805	R 38 06 M5	M5x0,8	6	4	28	9	5,9
020796	R 38 06 18	G1/8”	6	5	30	13	8,5
020797	R 38 06 14	G1/4”	6	6,5	32,5	16	13,7
020798	R 38 08 18	G1/8”	8	5	31	13	9,4
020799	R 38 08 14	G1/4”	8	6,5	33,5	16	14,5
020800	R 38 10 14	G1/4”	10	6,5	34,5	16	15,5
020801	R 38 10 38	G3/8”	10	7	35	20	22
020802	R 38 12 38	G3/8”	12	7	38	20	23,6
020803	R 38 12 12	G1/2”	12	8,5	39,5	25	38

Main features

Type	Description
R27	Bulkhead. In nickel-plated brass.



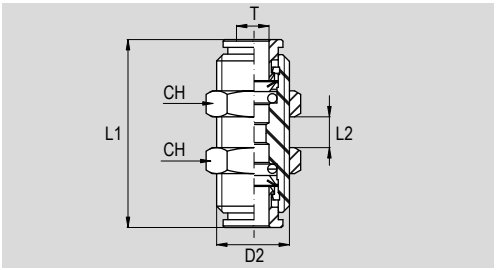

Dimensions

Code	Item	T (ØTube)	D2	L1	L2 (max)	CH	Weight (g)
020580	R 27 03 03	3	M8x0,75	22,5	9,5	12	14,5
020581	R 27 04 04	4	M12x1	28	11	16	23,5
020583	R 27 06 06	6	M14x1	34	16	18	33
020584	R 27 08 08	8	M16x1	34	16	20	39,5
020585	R 27 10 10	10	M18x1	39	19	22	51,5
020586	R 27 12 12	12	M20x1	41	20	24	60

Main features

Type	Description
R27F	Female bulkhead. In nickel-plated brass.



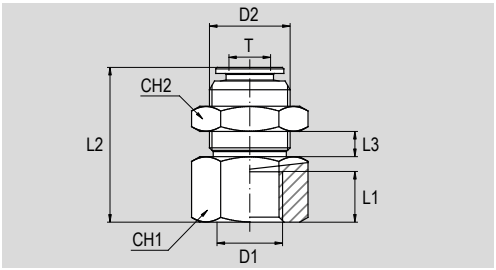

Dimensions

Code	Item	T (ØTube)	D1	D2	L1	L2	L2	CH1	CH1	Weight (g)
020619	R 27F 06 18	6	G1/8"	M14x1	7	26.5	9	18	18	-
020620	R 27F 06 14	6	G1/4"	M14x1	10	30.5	9	18	18	-
020621	R 27F 08 18	8	G1/8"	M16x1	7	26.5	9	20	20	-
020622	R 27F 08 14	8	G1/4"	M16x1	10	30.5	9	20	20	-
020623	R 27F 10 38	10	G3/8"	M18x1	11	33	10	22	22	-

Main features

Type	Description
R26	Union. In nickel-plated brass.



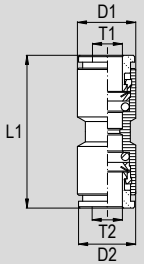

Dimensions

Code	Item	T1 (ØTube)	T2 (ØTube)	D1	D2	L1	Weight (g)
020560	R 26 03 03	3	3	6,5	6,5	21,5	2,7
020561	R 26 04 04	4	4	9	9	28	6,8
020563	R 26 06 06	6	6	12	12	33,6	15
020568	R 26 06 04	6	4	12	12	31	14,7
020564	R 26 08 08	8	8	14	14	34	18
020569	R 26 08 06	8	6	14	14	34	21
020565	R 26 10 10	10	10	16	16	38,6	22,5
020570	R 26 10 08	10	8	16	16	36,5	25,2
020566	R 26 12 12	12	12	19	19	41	37
020598	R 26 12 08	12	8	19	14	39	-
020599	R 26 12 10	12	10	19	16	40,5	-
020567	R 26 14 14	14	14	22	22	47	47,4
020600	R 26 14 12	14	12	22	19	44,5	-
020601	R 26 16 16	16	16	24	24	47	63,2
020602	R 26 16 12	16	12	24	19	44,5	-
020603	R 26 16 14	16	14	24	22	47	-

Main features

Type	Description
R39	Stem. In nickel-plated brass.



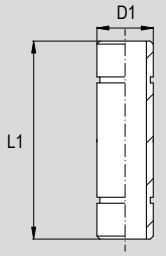

Dimensions

Code	Item	D1	L1	Weight (g)
020831	R 39 00 04	4	35	2,7
020833	R 39 00 06	6	40	5,1
020834	R 39 00 08	8	42	8
020835	R 39 00 10	10	50	11,8
020836	R 39 00 12	12	53	15,3
020837	R 39 00 14	14	54	18,8

Main features

Type	Description
R29	Plug. In nickel-plated brass.



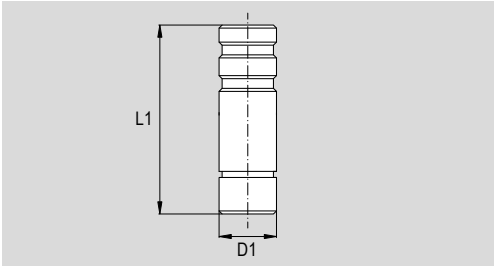

Dimensions

Code	Item	D1	L1	Weight (g)
020630	R 29 00 03	3	20	1
020631	R 29 00 04	4	25	2,3
020633	R 29 00 06	6	25	3,7
020634	R 29 00 08	8	30	7,2
020635	R 29 00 10	10	35	11,8
020636	R 29 00 12	12	40	18,2
020637	R 29 00 14	14	40	26,2
020638	R 29 00 16	16	40	32,5

Main features

Type	Description
R14	BSPT elbow. In nickel-plated brass.

PTFE



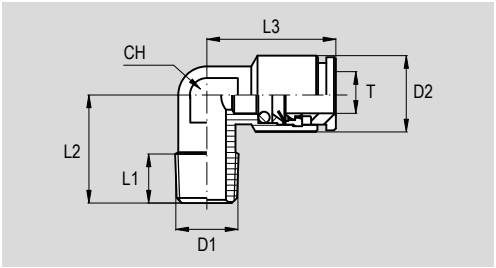

Dimensions

Code	Item	T (ØTube)	D1	D2	L1	L2	L3	CH	Weight (g)
020091	R 14 04 18	4	R1/8”	9	7,8	15	17,5	8	8,1
020101	R 14 04 14	4	R1/4”	9	10	19	17,5	10	13,9
020094	R 14 06 18	6	R1/8”	12	8,2	15,5	20,5	10	13,2
020095	R 14 06 14	6	R1/4”	12	10	19	20,5	10	16,7
020096	R 14 08 18	8	R1/8”	14	7,5	19	22,5	12	19,6
020097	R 14 08 14	8	R1/4”	14	10,5	20	22,5	12	22,6
020098	R 14 10 14	10	R1/4”	16	9,5	22	25	14	27,1
020099	R 14 10 38	10	R3/8”	16	10,8	22,5	25	14	32,1

Main features

Type	Description
R15	BSPT swivel elbow. In nickel-plated brass.





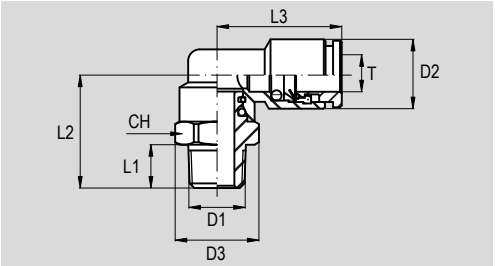

Dimensions

Code	Item	T (ØTube)	D1	D2	D3	L1	L2	L3	CH	Weight (g)
020131	R 15 04 18	4	R1/8”	9	11,2	7,5	17,85	19,5	10	10,8
020132	R 15 04 14	4	R1/4”	9	15,5	11	24,2	19,5	14	20,9
020135	R 15 06 18	6	R1/8”	12	14,5	7,5	20,2	22	13	19,4
020136	R 15 06 14	6	R1/4”	12	15,5	11	24,2	22	14	23,9
020588	R 15 06 38	6	R3/8”	12	20	11,5	25,2	22	18	-
020137	R 15 08 18	8	R1/8”	14	14,5	7,5	20	22,5	13	23
020138	R 15 08 14	8	R1/4”	14	15,5	11	24	22,5	14	26,4
020139	R 15 08 38	8	R3/8”	14	20	11,5	27	23	18	39,2
020589	R 15 08 12	8	R1/2”	14	24,5	14	31	23	22	-
020590	R 15 10 18	10	R1/8”	16	20	7,5	26,5	23	18	-
020140	R 15 10 14	10	R1/4”	16	20	11	26,5	26	18	38,6
020141	R 15 10 38	10	R3/8”	16	20	11,5	27	26	18	41
020591	R 15 10 12	10	R1/2”	16	24,5	14	31	26	22	-
020592	R 15 12 14	12	R1/4”	19	22,5	11	30	28,5	20	-
020142	R 15 12 38	12	R3/8”	19	22,5	11,5	30,5	28,5	20	61,8
020143	R 15 12 12	12	R1/2”	19	24,5	14	33,5	28,5	22	71,5
020144	R 15 14 38	14	R3/8”	22	22,5	11,5	30,5	32	20	66,2
020145	R 15 14 12	14	R1/2”	22	24,5	14	33,5	32	22	74,6

Main features

Type	Description
R17	Female BSP elbow. In nickel-plated brass.



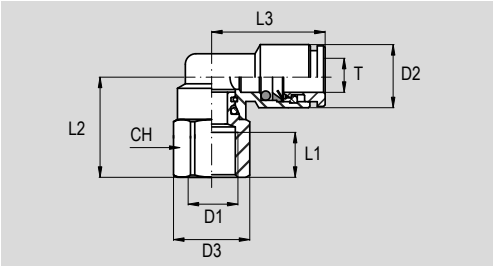

Dimensions

Code	Item	T (ØTube)	D1	D2	D3	L1	L2	L3	CH	Weight (g)
020251	R 17 04 18	4	G1/8”	9	14,5	6,5	17,9	19,5	13	17,3
020254	R 17 06 18	6	G1/8”	12	14,5	6,5	17,9	22	13	19,7
020255	R 17 06 14	6	G1/4”	12	18	10	22,2	22	16	25,4
020256	R 17 08 18	8	G1/8”	14	14,5	6,5	17,7	22,5	13	23,1
020257	R 17 08 14	8	G1/4”	14	18	10	22	22,5	16	29,1
020258	R 17 10 14	10	G1/4”	16	18	10	23	26	16	35,6
020259	R 17 10 38	10	G3/8”	16	22,5	10,5	25	26	20	43,5

Main features

Type	Description
R41	BSP swivel elbow. In nickel-plated brass.



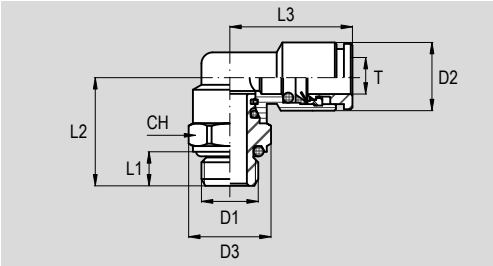

Dimensions

Code	Item	T (ØTube)	D1	D2	D3	L1	L2	L3	CH	Weight (g)
020190	R 41 03 M5	3	M5x0,8	7	7,9	4	13,7	14	7	7,1
020191	R 41 04 M5	4	M5x0,8	9,1	10	4	14	17,5	9	8,8
020210	R 41 04 M6	4	M6x1	9,1	10	4,5	14,5	17,5	9	8,7
020192	R 41 04 18	4	G1/8"	9,1	14,5	5	18,2	19,5	13	15,7
020193	R 41 04 14	4	G1/4"	9,1	16	6,5	21,7	19,5	13	19
020211	R 41 06 M5	6	M5x0,8	12	10	4	14	20,5	9	11,9
020212	R 41 06 M6	6	M6x1	12	10	4,5	14,5	20,5	9	12
020208	R 41 06 12x1,25	6	M12x1,25	12	15	6,5	21,7	22	13	22
020209	R 41 06 12x1,5	6	M12x1,5	12	15	6,5	21,7	22	13	21,5
020196	R 41 06 18	6	G1/8"	12	14,5	5	18,2	22	13	18,5
020197	R 41 06 14	6	G1/4"	12	16	6,5	21,7	22	13	22
020607	R 41 06 38	6	G3/8"	12	20	7	22,2	22	13	-
020608	R 41 06 12	6	G1/2"	12	25	8,5	24,2	22	13	-
020198	R 41 08 18	8	G1/8"	14	14,5	5	18	22,5	13	22
020199	R 41 08 14	8	G1/4"	14	16	6,5	21,5	22,5	13	26
020200	R 41 08 38	8	G3/8"	14	20	7	25,5	23	16	36,8
020220	R 41 08 12	8	G1/2"	14	25	8,5	27,5	23	16	41
020609	R 41 10 18	10	G1/8"	16	18	5	20,5	26	16	-
020201	R 41 10 14	10	G1/4"	16	18	6,5	22	26	16	32,5
020202	R 41 10 38	10	G3/8"	16	20	7	25,5	26	16	39,5
020213	R 41 10 12	10	G1/2"	16	25	8,5	27,5	26	16	43,2
020214	R 41 12 14	12	G1/4"	19	22,5	6,5	25,5	28,5	20	58,5
020203	R 41 12 38	12	G3/8"	19	22,5	7	26	28,5	20	57
020204	R 41 12 12	12	G1/2"	19	25	8,5	30,5	28,5	20	65,1
020205	R 41 14 38	14	G3/8"	22	22,5	7	26	32	20	61,6
020206	R 41 14 12	14	G1/2"	22	25	8,5	30,5	32	20	68,5
020261	R 41 16 12	16	G1/2"	24	27	8,5	33	36,5	25	105,2
020262	R 41 16 34	16	G3/4"	24	32	9,5	35	36,5	25	113,8

Main features

Type	Description
R40	45° BSP swivel elbow. In nickel-plated brass.



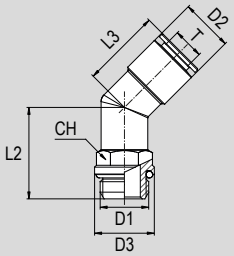

Dimensions

Code	Item	T (ØTube)	D1	D2	D3	L1	L2	L3	CH	Weight (g)
020611	R 40 06 18	6	G1/8"	12	12,8	5	21	21	13	-
020612	R 40 06 14	6	G1/4"	12	16	6,5	24,5	21	13	-
020613	R 40 08 18	8	G1/8"	14	12,8	5	21	21	13	-
020614	R 40 08 14	8	G1/4"	14	16	6,5	24,5	21	13	-
020615	R 40 10 14	10	G1/4"	16	16	6,5	23	25	13	-
020616	R 40 10 38	10	G3/8"	16	20	7	26,5	25	16	-
020617	R 40 12 38	12	G3/8"	20	20	7	26	25	16	-
020618	R 40 12 12	12	G1/2"	20	25	8,5	30,5	25	20	-

Main features

Type	Description
R52	Extended BSP swivel elbow. In nickel-plated brass.



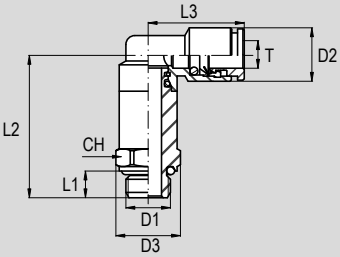

Dimensions

Code	Item	T (ØTube)	D1	D2	D3	L1	L2	L3	CH	Weight (g)
020271	R 52 04 18	4	G1/8"	9,1	14,5	5	29,2	19,5	13	25,6
020274	R 52 06 18	6	G1/8"	12	14,5	5	32,2	22	13	30,5
020275	R 52 06 14	6	G1/4"	12	16	6,5	35,7	22	13	30,9
020276	R 52 08 18	8	G1/8"	14	14,5	5	34	22,5	13	35,7
020277	R 52 08 14	8	G1/4"	14	16	6,5	37,5	22,5	13	36

Main features

Type	Description
R19	BSP swivel elbow with hexagonal wrench. In nickel-plated brass.



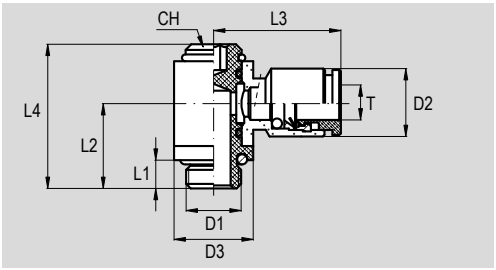

Dimensions

Code	Item	T (ØTube)	D1	D2	D3	L1	L2	L3	L4	CH	Weight (g)
020159	R 19 03 M3	3	M3x0,5	6,8	7	3	8,5	14	14	2	4,6
020160	R 19 03 M5	3	M5x0,8	6,8	7	4	9,5	14	15	2	8,1
020161	R 19 04 M5	4	M5x0,8	9	10	4	11	18,5	19	3	10,1
020162	R 19 04 18	4	G1/8”	9	14	5	15	20,5	25,5	4	22,2
020176	R 19 06 M5	6	M5x0,8	12	10	4	11	21,5	19	3	13,3
020166	R 19 06 18	6	G1/8”	12	14	5	15	22,5	25,5	4	24,4
020167	R 19 06 14	6	G1/4”	12	18	6,5	17,5	24	29	5	39,3
020168	R 19 08 18	8	G1/8”	14	14	5	15	23,5	25,5	4	25,7
020169	R 19 08 14	8	G1/4”	14	18	6,5	17,5	24,5	29	5	39,1
020170	R 19 10 14	10	G1/4”	16	18	6,5	17,5	27	29	5	43,6
020171	R 19 10 38	10	G3/8”	16	22	7	20	29	32,5	6	62,2
020172	R 19 12 38	12	G3/8”	19	22	7	20	29,5	32,5	6	67,1
020173	R 19 12 12	12	G1/2”	19	26	8,5	24	31,5	39,5	8	114,8

Main features

Type	Description
R53	Double BSP swivel elbow with hexagonal wrench. In nickel-plated brass.



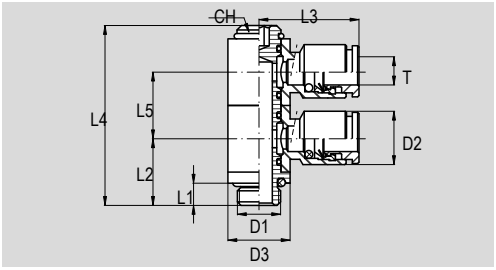

Dimensions

Code	Item	T (ØTube)	D1	D2	D3	L1	L2	L3	L4	L5	CH	Weight (g)
020181	R 53 04 M5	4	M5x0,8	9	10	4	11	18,5	29,2	10	3	18,5
020182	R 53 04 18	4	G1/8”	9,1	14	5	15	20,5	40,5	15	4	40
020184	R 53 06 18	6	G1/8”	12	14	5	15	22,5	40,5	15	4	46
020185	R 53 06 14	6	G1/4”	12	18	6,5	17,5	24	46,1	17	5	69,5
020186	R 53 08 18	8	G1/8”	14	14	5	15	23,5	40,5	15	4	50
020187	R 53 08 14	8	G1/4”	14	18	6,5	17,5	24,5	46,1	17	5	69,5

Main features

Type	Description
R61	Stem elbow. In nickel-plated brass.



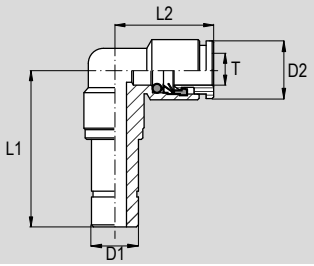

Dimensions

Code	Item	T (ØTube)	D1	D2	L1	L2	Weight (g)
020121	R 61 04 04	4	4	9,1	25,5	19,5	14
020122	R 61 04 06	4	6	9,1	29,5	19,5	15
020123	R 61 06 04	6	4	12	25,5	22	17
020124	R 61 06 06	6	6	12	29,5	22	17
020125	R 61 06 08	6	8	12	29,5	22	17,5
020126	R 61 08 06	8	6	14	29,5	22,5	20,5
020127	R 61 08 08	8	8	14	29,5	22,5	20,5
020128	R 61 10 10	10	10	16	33,5	26	30

Main features

Type	Description
R18	Equal elbow. In nickel-plated brass.



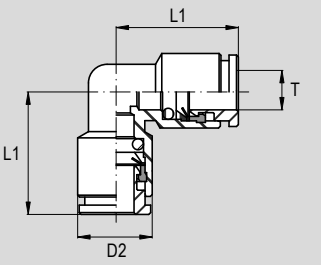

Dimensions

Code	Item	T (ØTube)	D2	L1	Weight (g)
020280	R 18 03 03	3	7	13	4,5
020281	R 18 04 04	4	9	17,5	9
020283	R 18 06 06	6	12	20,5	16,5
020284	R 18 08 08	8	14	22,5	22
020285	R 18 10 10	10	16	25	29,5
020286	R 18 12 12	12	19	26,5	48,5
020287	R 18 14 14	14	22	31,5	58
020292	R 18 16 16	16	24	36,5	90,6

Main features

Type	Description
R42	BSPT swivel tee. In nickel-plated brass.



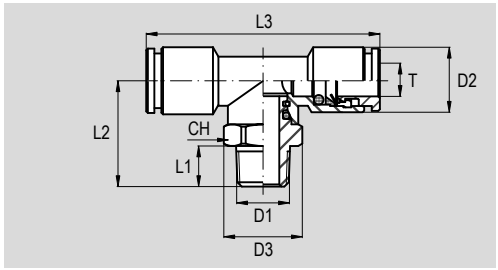

Dimensions

Code	Item	T (ØTube)	D1	D2	D3	L1	L2	L3	CH	Weight (g)
020341	R 42 04 18	4	R1/8"	9,1	14,5	7,5	20,2	39	13	21,5
020353	R 42 04 14	4	R1/4"	9,1	15,5	11	24,2	39	14	25,6
020344	R 42 06 18	6	R1/8"	12	14,5	7,5	20	44	13	26,3
020345	R 42 06 14	6	R1/4"	12	15,5	11	24	44	14	30,4
020346	R 42 08 18	8	R1/8"	14	14,5	7,5	20	45	13	31,3
020347	R 42 08 14	8	R1/4"	14	15,5	11	24	45	14	35,3
020352	R 42 08 38	8	R3/8"	14	20	11,5	27	46	18	49,1
020348	R 42 10 14	10	R1/4"	16	20	11	26,5	52	18	50
020349	R 42 10 38	10	R3/8"	16	20	11,5	27	52	18	51,6
020350	R 42 12 38	12	R3/8"	19	22,5	11,5	30,5	57	20	80
020351	R 42 12 12	12	R1/2"	19	24,5	14	33,5	57	22	83,5

Main features

Type	Description
R43	BSP swivel tee. In nickel-plated brass.



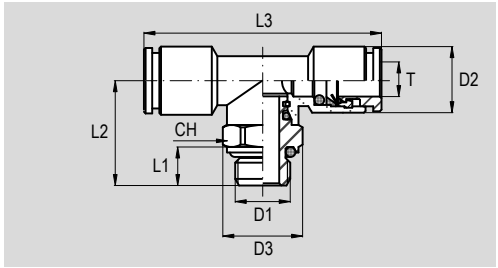

Dimensions

Code	Item	T (ØTube)	D1	D2	D3	L1	L2	L3	CH	Weight (g)
020371	R 43 04 18	4	G1/8"	9,1	14,5	5	18,2	39	13	20,2
020372	R 43 04 14	4	G1/4"	9,1	16	6,5	21,7	39	13	23,9
020375	R 43 06 18	6	G1/8"	12	14,5	5	18	44	13	25,2
020376	R 43 06 14	6	G1/4"	12	16	6,5	21,5	44	13	29,1
020377	R 43 08 18	8	G1/8"	14	14,5	5	18	45	13	30,7
020378	R 43 08 14	8	G1/4"	14	16	6,5	21,5	45	13	34,1
020379	R 43 08 38	8	G3/8"	14	20	7	25,5	46	16	46,4
020380	R 43 10 14	10	G1/4"	16	18	6,5	22	52	16	44,4
020381	R 43 10 38	10	G3/8"	16	20	7	25,5	52	16	49,7
020382	R 43 12 38	12	G3/8"	19	22,5	7	26	57	20	75,3
020383	R 43 12 12	12	G1/2"	19	25	8,5	30,5	57	20	82

Main features

Type	Description
R21	BSP swivel tee with hexagonal wrench. In nickel-plated brass.



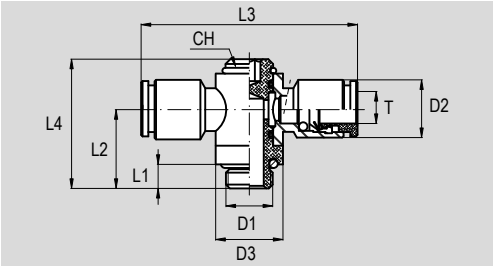

Dimensions

Code	Item	T (ØTube)	D1	D2	D3	L1	L2	L3	L4	CH	Weight (g)
020401	R 21 04 M5	4	M5x0,8	9	10	4	11	38	19	3	13,8
020402	R 21 04 18	4	G1/8”	9	14	5	15	41	25,5	4	27,4
020416	R 21 06 M5	6	M5x0,8	12	10	4	11	43	19	3	19,9
020406	R 21 06 18	6	G1/8”	12	14	5	15	45	25,5	4	32,1
020407	R 21 06 14	6	G1/4”	12	18	6,5	17,5	48	29	5	45,8
020408	R 21 08 18	8	G1/8”	14	14	5	15	47	25,5	4	34,1
020409	R 21 08 14	8	G1/4”	14	18	6,5	17,5	49	29	5	46,5
020410	R 21 10 14	10	G1/4”	16	18	6,5	17,5	54	29	5	55,2
020411	R 21 10 38	10	G3/8”	16	22	7	20	58	33	6	72,4
020412	R 21 12 38	12	G3/8”	19	22	7	20	59	33	6	79
020413	R 21 12 12	12	G1/2”	19	27	8,5	24	63	39,5	8	124,7

Main features

Type	Description
R57	Double BSP swivel tee with hexagonal wrench. In nickel-plated brass.



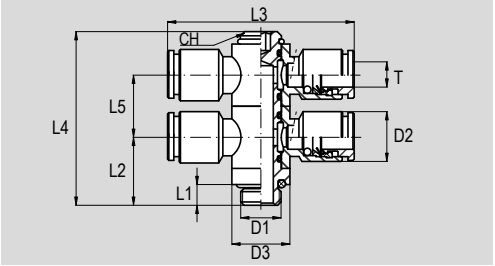

Dimensions

Code	Item	T (ØTube)	D1	D2	D3	L1	L2	L3	L4	L5	CH	Weight (g)
020451	R 57 04 M5	4	M5x0,8	9	10	4	11	38	29,2	10	3	25
020452	R 57 04 18	4	1/8”	9	14	5	15	41	40,5	15	4	50
020454	R 57 06 18	6	1/8”	12	14	5	15	45	40,5	15	4	59
020455	R 57 06 14	6	1/4”	12	18	6,5	17,5	48	46,1	17	5	82
020456	R 57 08 18	8	1/8”	14	14	5	15	47	40,5	15	4	61
020457	R 57 08 14	8	1/4”	14	18	6,5	17,5	49	46,1	17	5	83,5

Main features

Type	Description
R62	Stem tee. In nickel-plated brass.



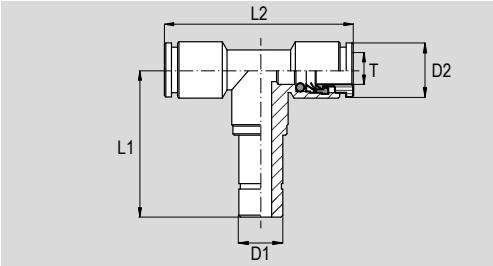

Dimensions

Code	Item	T (ØTube)	D1	D2	L1	L2	Weight (g)
020146	R 62 04 04	4	4	9,1	25,7	39	18,5
020147	R 62 04 06	4	6	9,1	29,7	39	19,5
020148	R 62 06 06	6	6	12	29,5	44	24,5
020149	R 62 06 08	6	8	12	29,5	44	24,5
020150	R 62 08 08	8	8	14	29,5	45	29
020151	R 62 08 10	8	10	14	33,5	46	38,5
020152	R 62 10 10	10	10	16	33,5	52	41

Main features

Type	Description
R22	BSPT swivel side tee. In nickel-plated brass.

PTFE



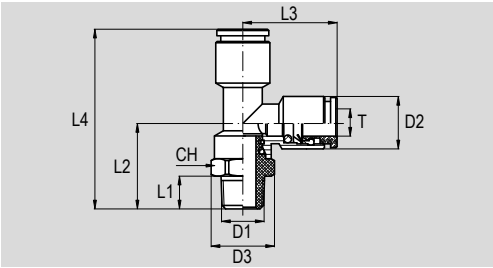

Dimensions

Code	Item	T (ØTube)	D1	D2	D3	L1	L2	L3	L4	CH	Weight (g)
020431	R 22 04 18	4	R1/8”	9	14,5	7,5	20,2	19,5	39,7	13	22
020430	R 22 04 14	4	R1/4”	9	15,5	11	24,2	19,5	43,7	14	25,5
020434	R 22 06 18	6	R1/8”	12	14,5	7,5	20,2	22	42,2	13	27,5
020435	R 22 06 14	6	R1/4”	12	15,5	11	24,2	22	46,2	14	31
020436	R 22 08 18	8	R1/8”	14	14,5	7,5	20	22,5	42,5	13	31
020437	R 22 08 14	8	R1/4”	14	15,5	11	24	22,5	46,5	14	35
020438	R 22 10 14	10	R1/4”	16	20	11	26,5	26	52,5	18	50
020439	R 22 10 38	10	R3/8”	16	20	11,5	27	26	53	18	51
020440	R 22 12 38	12	R3/8”	19	22,5	11,5	30,5	28,5	59	20	75
020441	R 22 12 12	12	R1/2”	19	24,5	14	33,5	28,5	62	22	83,5

Main features

Type	Description
R44	BSP swivel side tee. In nickel-plated brass.



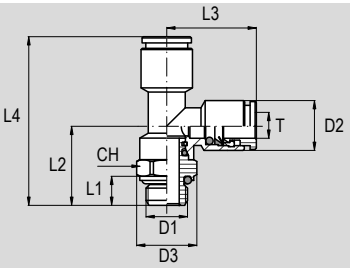

Dimensions

Code	Item	T (ØTube)	D1	D2	D3	L1	L2	L3	L4	CH	Weight (g)
020461	R 44 04 18	4	G1/8”	9,1	14,5	5	18,2	19,5	37,7	13	20,5
020462	R 44 04 14	4	G1/4”	9,1	16	6,5	21,7	19,5	41,2	13	24
020465	R 44 06 18	6	G1/8”	12	14,5	5	18,2	22	40,2	13	26
020466	R 44 06 14	6	G1/4”	12	16	6,5	21,7	22	43,7	13	29,5
020467	R 44 08 18	8	G1/8”	14	14,5	5	18	22,5	40,5	13	30
020468	R 44 08 14	8	G1/4”	14	16	6,5	21,5	22,5	44	13	33,5
020470	R 44 10 14	10	G1/4”	16	18	6,5	22	26	48	16	44
020471	R 44 10 38	10	G3/8”	16	20	7	25,5	26	51,5	16	49
020472	R 44 12 38	12	G3/8”	19	22,5	7	26	28,5	54,5	20	73
020473	R 44 12 12	12	G1/2”	19	25	8,5	30,5	28,5	59	20	77

Main features

Type	Description
R63	Stem side tee. In nickel-plated brass.



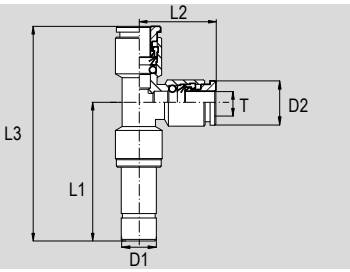

Dimensions

Code	Item	T (ØTube)	D1	D2	L1	L2	L3	Weight (g)
020153	R 63 04 04	4	4	9,1	25,7	19,5	45,2	18,5
020154	R 63 04 06	4	6	9,1	29,7	19,5	49,2	20
020155	R 63 06 06	6	6	12	29,7	22	51,7	25
020156	R 63 06 08	6	8	12	29,7	22	51,7	25,5
020157	R 63 08 08	8	8	14	29,5	22,5	52	30
020158	R 63 10 10	10	10	16	33,5	26	59,5	41

Main features

Type	Description
R23	Equal tee. In nickel-plated brass.



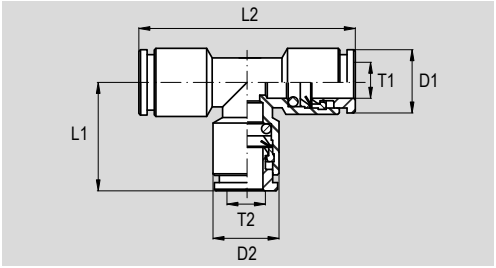

Dimensions

Code	Item	T1 (ØTube)	T2 (ØTube)	D1	D2	L1	L2	Weight (g)
020490	R 23 03 03	3	3	7	7	13	26	5,6
020491	R 23 04 04	4	4	9	9	17,5	35	12,5
020493	R 23 06 06	6	6	12	12	20	40	22,5
020593	R 23 06 04	6	4	12	9	18	40	-
020494	R 23 08 08	8	8	14	14	21	42	28
020594	R 23 08 06	8	6	14	12	20,5	42	-
020495	R 23 10 10	10	10	16	16	24,5	49	39,2
020595	R 23 10 08	10	8	16	14	23	49	-
020496	R 23 12 12	12	12	19	19	26	52	61,3
020596	R 23 12 10	12	10	19	16	26	52	-
020497	R 23 14 14	14	14	22	22	30,5	61	77,1
020498	R 23 16 16	16	16	24	24	34,5	69	124

Main features

Type	Description
R51	Y piece. In nickel-plated brass.



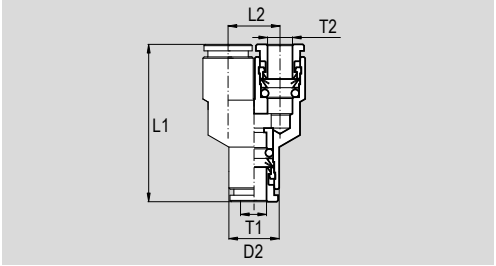

Dimensions

Code	Item	T1 (ØTube)	T2 (ØTube)	D2	L1	L2	Weight (g)
020610	R 51 03 03	3	3	6,8	25	7,5	8,2
020888	R 51 04 04	4	4	9	29,5	9,5	14,3
020889	R 51 06 06	6	6	12	36,5	12,5	32,7
020891	R 51 06 04	6	4	12	34,1	11	36,1
020890	R 51 08 08	8	8	14	37,5	14,5	44,1
020892	R 51 08 06	8	6	14	37,5	14,5	51,1
020894	R 51 10 10	10	10	16	44,5	16,5	62,7
020893	R 51 10 08	10	8	18	44	16,5	74,9
020895	R 51 12 12	12	12	19	49	19,5	95,8

Main features

Type	Description
R64	Equal H swivel union. In nickel-plated brass.



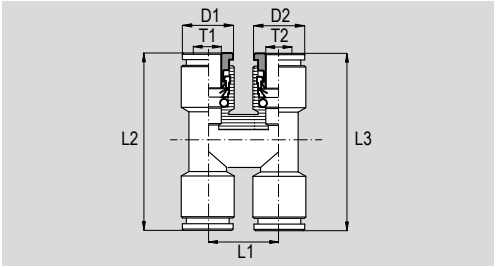

Dimensions

Code	Item	T1 (ØTube)	T2 (ØTube)	D1	D2	L1	L2	L3	Weight (g)
020228	R 64 04 04	4	4	9,1	9,1	18,4	39	39	31
020229	R 64 04 06	4	6	9,1	12	18,4	39	44	36
020230	R 64 06 06	6	6	12	12	18	44	44	41
020231	R 64 06 08	6	8	12	14	18	44	45	46,5
020232	R 64 08 08	8	8	14	14	18	45	45	50

Main features

Type	Description
R65	Y swivel piece. In nickel-plated brass.



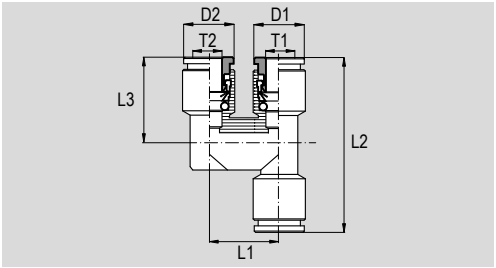

Dimensions

Code	Item	T1 (ØTube)	T2 (ØTube)	D1	D2	L1	L2	L3	Weight (g)
020263	R 65 04 04	4	4	9,1	9,1	18,4	39	19,5	27
020264	R 65 04 06	4	6	9,1	12	18,4	39	22	29,5
020265	R 65 06 06	6	6	12	12	18,2	44	22	34,5
020266	R 65 06 08	6	8	12	14	18	44	22,5	37,5
020267	R 65 08 08	8	8	14	14	18	45	22,5	42

Main features

Type	Description
R31	Single hollow bolt. In nickel-plated brass. Compatible with banjo types R35, R36, RT28, C23, C24, O25 and A042.



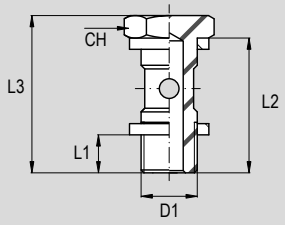

Dimensions

Code	Item	D1	L1	L2	L3	CH	Weight (g)
020671	R 31 00 M5	M5x0,8	1	14,3	18,5	8	2,5
020672	R 31 00 18	G1/8”	4,4	21,2	27	14	13,4
020673	R 31 00 14	G1/4”	5,9	24,7	31,5	17	27,8
020674	R 31 00 38	G3/8”	6,4	28,2	36	20	43
020675	R 31 00 12	G1/2”	7,5	33,5	41,5	26	80,5

Main features

Type	Description
R32	Double hollow bolt. In nickel-plated brass. Compatible with banjo types R35, R36, RT28, C23, C24, O25 and A042.



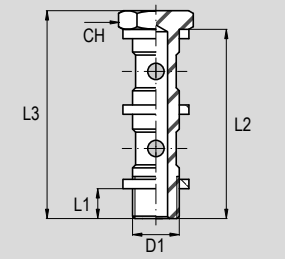

Dimensions

Code	Item	D1	L1	L2	L3	CH	Weight (g)
020691	R 32 00 18	G1/8”	4,1	37,7	43,5	14	18,5
020692	R 32 00 14	G1/4”	5,6	43,2	50	17	38,5
020693	R 32 00 38	G3/8”	6,1	49,7	57,5	20	63,5
020694	R 32 00 12	G1/2”	7	59	67	26	117

Main features

Type	Description
R59	Single M/F banjo bolt. In nickel-plated brass. Compatible with banjo types R35, R36, RT28, C23, C24, O25 and A042



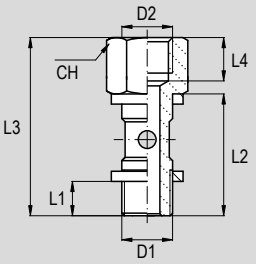

Dimensions

Code	Item	D1	D2	L1	L2	L3	L4	CH	Weight (g)
020701	R 59 00 18	G1/8”	G1/8”	4,4	21,2	35	6,2	14	19,5
020702	R 59 00 14	G1/4”	G1/4”	5,9	24,7	40,5	10	17	32,5
020703	R 59 00 38	G3/8”	G3/8”	6,4	28,2	45	10	20	47

Main features

Type	Description
R60	Double M/F banjo bolt. In nickel-plated brass. Compatible with banjo types R35, R36, RT28, C23, C24, O25 and A042



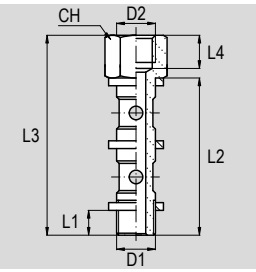

Dimensions

Code	Item	D1	D2	L1	L2	L3	L4	CH	Weight (g)
020705	R 60 00 18	G1/8”	G1/8”	4,1	37,7	51,5	6,2	14	26
020706	R 60 00 14	G1/4”	G1/4”	5,6	43,2	59	10	17	44
020707	R 60 00 38	G3/8”	G3/8”	6,1	49,7	66,5	10	20	66

Main features

Type	Description
R35	Single banjo. In nickel-plated brass. Compatible with bolt types R31, R32, R59 and R60. Compatible with flow regulators types V14 and V15 (for size M5 with coding M5R only). Compatible with accessories with integrated function types V45, V46 and V47.



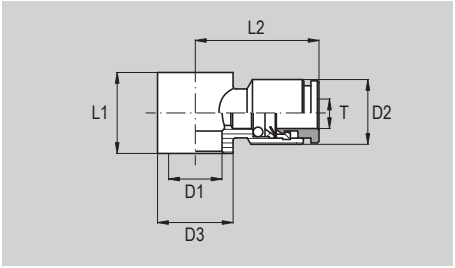

Dimensions

Code	Item	T (ØTube)	D1	D2	D3	L1	L2	Weight (g)
020732	R 35 04 M5	4	M5	9,1	10	9	18,5	7,7
020731	R 35 04 M5R	4	7	9,1	10	10	18,5	6,6
020733	R 35 04 18	4	1/8”	9,1	14	15	20,5	13,5
020745	R 35 06 M5R	6	7	12	10	10	21,5	10,1
020736	R 35 06 18	6	1/8”	12	14	15	22,5	15,5
020737	R 35 06 14	6	1/4”	12	18	17	24	21,6
020738	R 35 08 18	8	1/8”	14	14	15	23,5	16,7
020739	R 35 08 14	8	1/4”	14	18	17	24,5	22,8
020740	R 35 08 38	8	3/8”	14	22	20	26,5	32,7
020741	R 35 10 14	10	1/4”	16	18	17	27	27,2
020742	R 35 10 38	10	3/8”	16	22	20	29	34,5
020743	R 35 12 38	12	3/8	19	22	20	29,5	38,8
020744	R 35 12 12	12	1/2”	19	26	24	31,5	56,9

Main features

Type	Description
R36	Double banjo. In nickel-plated brass. Compatible with bolt types R31, R32, R59 and R60. Compatible with flow regulators types V14 and V15. Compatible with accessories with integrated function types V45, V46 and V47.



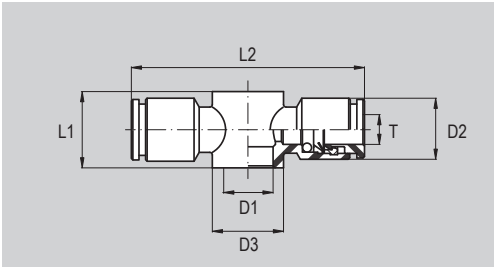

Dimensions

Code	Item	T (ØTube)	D1	D2	D3	L1	L2	Weight (g)
020761	R 36 04 M5	4	M5	9	10	9	37	10,9
020762	R 36 04 18	4	1/8”	9	14	15	41	18
020765	R 36 06 18	6	1/8”	12	14	15	45	23
020766	R 36 06 14	6	1/4”	12	18	17	48	28,7
020767	R 36 08 18	8	1/8”	14	14	15	47	25,3
020768	R 36 08 14	8	1/4”	14	18	17	49	29,7
020773	R 36 08 38	8	3/8”	14	22	20	53	42,5
020769	R 36 10 14	10	1/4”	16	18	17	54	37,9
020770	R 36 10 38	10	3/8”	16	22	20	58	44,5
020771	R 36 12 38	12	3/8"	19	22	20	59	51,3
020772	R 36 12 12	12	1/2”	19	27	24	63	67,2

Notes





Code key

Series	Type*	Ø Tube*	Thread*
RHP	**11**	**06**	**18**
RHP	11, 14, 15	04 = Ø 4 mm 06 = Ø 6 mm	M6x1 = M6x1 M8x1 = M8x1 M10x1 = M10x1 18 = R1/8" 14 = R1/4"

Notes

For standard materials see the table below

* For matching between fitting type, tube diameter and thread, see page 4.5.2; for the specific type, see the following pages.

How to order

Series	Type	Ø Tube	Thread
RHP	**11**	**06**	**18**

Technical data

Version		Series RHP
Fluid		Compressed air
Maximum pressure		250 bar
Vacuum		-
Temperature range		-20°C ÷ +80°C
Parallel threads		-
Taper threads		UNI EN 10226-1 (BSPT)
Metric threads		UNI EN ISO 965-1
Tubes	Ø 4 mm	Nylon (PA6) 6-6 (4x1,5)
	Ø 6 mm	Nylon (PA6) 6-6 (6x3)
Tubes tolerance		±0,07 mm

Standard materials

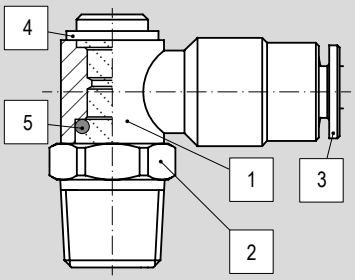

Position	Description	Material
1	Body	Nickel-plated brass
2	Metal thread	Nickel-plated brass
3	Collet	Brass
4	Seeger*	Zinc-plated steel C75
5	Seals	NBR

*Only for type RHP15

Fittings series RHP

Type			Taper threads (BSPT)	Parallel threads (BSP)	Metric threads	For tube Ø mm	Data sheet and code page
RHP11	BSPT stud		1/8", 1/4"	-	M6x1, M8x1, M10x1	4, 6	4.5.3
RHP14	BSPT elbow		1/8"	-	M6x1, M8x1, M10x1	4, 6	4.5.3
RHP15	BSPT swivel elbow		1/8", 1/4"	-	M6x1, M8x1, M10x1	4, 6	4.5.4

Thread/Tube matching

Tube Ø (external)	Thread				
	M6x1	M8x1	M10x1	R1/8"	R1/4"
Ø 4 mm	●	●	●	●	-
Ø 6 mm	●	●	●	●	●

Key
● available matching; - not available matching

Main features

Type	Description
RHP11	BSPT stud. For high pressure, in nickel-plated brass.



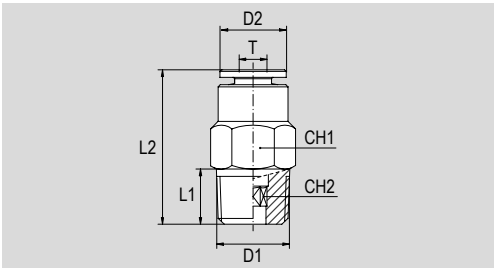

Dimensions

Code	Item	T (ØTube)	D1	D2	L1	L2	CH1	CH2	Weight (g)
020021	RHP 11 04 18	4	R1/8"	9,5	7,5	21	10	3	8,5
020019	RHP 11 04 M6x1	4	M6x1	9,5	8	25	10	2,5	8,4
020024	RHP 11 04 M8x1	4	M8x1	9,5	8	22,5	10	3	7,9
020025	RHP 11 04 M10x1	4	M10x1	9,5	8	21	11	3	9,5
020026	RHP 11 06 18	6	R1/8"	11,5	7,5	24	12	4	11,5
020119	RHP 11 06 14	6	R1/4"	11,5	11	26	14	4	19
020028	RHP 11 06 M6x1	6	M6x1	11,5	8	28	12	2,5	12,8
020018	RHP 11 06 M8x1	6	M8x1	11,5	8	28	12	4	13,3
020080	RHP 11 06 M10x1	6	M10x1	11,5	8	24,5	12	4	11,8

Main features

Type	Description
RHP14	BSPT elbow. For high pressure, in nickel-plated brass..



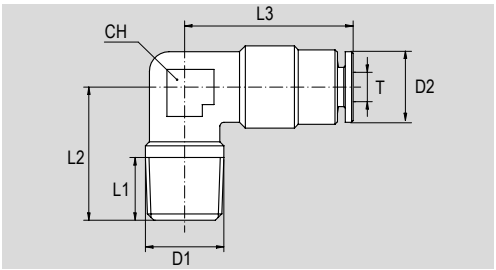

Dimensions

Code	Item	T (ØTube)	D1	D2	L1	L2	CH1	CH2	Weight (g)
020020	RHP 14 04 18	4	R1/8"	9,5	8	17	21,5	10	16
020022	RHP 14 04 M6x1	4	M6x1	9,5	7	17	21,5	10	13,9
020055	RHP 14 04 M8x1	4	M8x1	9,5	7	17	21,5	10	14,2
020056	RHP 14 04 M10x1	4	M10x1	9,5	7	18	21,5	10	16,9
020057	RHP 14 06 18	6	R1/8"	11,5	7,5	20	24	11	21
020058	RHP 14 06 M6x1	6	M6x1	11,5	7	20	24	11	19,8
020059	RHP 14 06 M8x1	6	M8x1	11,5	7	20	24	11	19,8
020060	RHP 14 06 M10x1	6	M10x1	11,5	7	21	24	11	22,7

Main features

Type	Description
RHP15	BSPT swivel elbow. For high pressure, in nickel-plated brass..



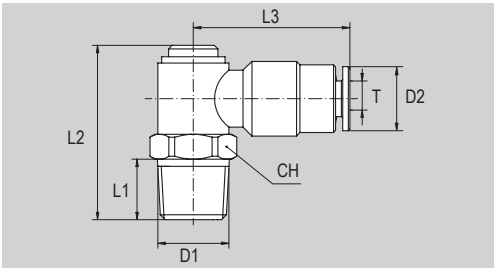

Dimensions

Code	Item	T (ØTube)	D1	D2	L1	L2	CH1	CH2	Weight (g)
020070	RHP 15 04 18	4	R1/8"	9,5	8,5	24,5	22	11	18,5
020072	RHP 15 04 M6x1	4	M6x1	9,5	8	24	22	11	16,9
020089	RHP 15 04 M8x1	4	M8x1	9,5	8	24	22	11	17,4
020074	RHP 15 04 M10x1	4	M10x1	9,5	8	25	22	11	18,9
020075	RHP 15 06 18	6	R1/8"	11,5	8,5	24,5	24	11	20,2
020120	RHP 15 06 14	6	R1/4"	11,5	11	28	24	14	25,5
020077	RHP 15 06 M6x1	6	M6x1	11,5	8	24	24	11	18,6
020078	RHP 15 06 M8x1	6	M8x1	11,5	8	24	24	11	19,5
020079	RHP 15 06 M10x1	6	M10x1	11,5	8	25	24	11	21

Push-in fittings
Series RT



Code key

Series	Type*	Ø Tube*	Thread (or Ø Tube 2)*
RT	**12**	**08**	**18**
RT	12M, 12, 13, 14, 15, 16, 17, 18, 19, 20, 21, 22, 23, 24, 25, 26, 27, 28, 29, 30, 31, 32, 33, 34, 36, 43, 44, 46, 48, 49	04 = Ø 4 mm 06 = Ø 6 mm 08 = Ø 8 mm 10 = Ø 10 mm 12 = Ø 12 mm 14 = Ø 14 mm	M5 = M5x0,8 M7 = M7x1 18 = 1/8" 14 = 1/4" 38 = 3/8" 12 = 1/2"

How to order

Series	Type	Ø Tube	Thread
RT	**12**	**08**	**18**

Notes

For standard materials see the table below.

* For matching between fitting type, tube diameter and thread, see from page 4.7.2; for the specific type, see the following pages.

Technical data

Version		Series RT
Fluid		Compressed air
Maximum pressure		18 bar
Vacuum		-99 KPa
Temperature range		-20°C ÷ +70°C
Parallel threads		UNI - ISO 228 / 1 (BSP)
Taper threads		UNI EN 10226-1 (BSPT)
Metric threads		UNI EN ISO 965-1
Tubes		Calibrated Nylon (PA6), PU and Rilsan (PA11)
Tubes tolerance	Ø 4 mm ÷ Ø 10 mm	±0,07 mm
	Ø 12 mm ÷ Ø 14 mm	±0,1 mm

Standard materials

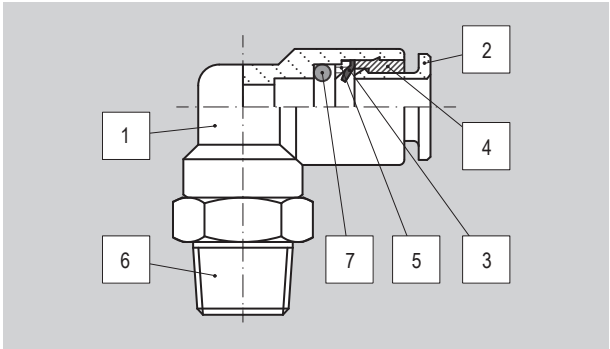

Position	Description	Material
1	Body	Acetalic resin (POM)*
2	Release collar	Acetalic resin (POM)
3	Collet	Stainless Steel AISI 301
4	Sealing ring	Acetalic resin (POM)
5	Protection ring	Acetalic resin (POM)
6	Metal thread	Nickel-plated brass**
7	Seals	NBR

*In nickel-plated brass for type RT12M
**In acetalic resin (POM) for types RT12 and RT13

Fittings series RT

Type			Taper threads (BSPT)	Parallel threads (BSP)	Metric threads	For tube Ø mm	Stem Ø mm	Data sheet and code page
RT12	BSP stud		-	1/8", 1/4", 3/8"	M7x1	4, 6, 8, 10	-	4.7.4
RT13	BSP stem adapter		-	1/8", 1/4", 3/8"	-	-	4, 6, 8, 10	4.7.5
RT26	Reducer		-	-	-	4, 6, 8, 10, 12	6, 8, 10, 12, 14	4.7.5
RT27	Stem increaser		-	-	-	6, 8	4, 6	4.7.6
RT32	Stem		-	-	-	-	4, 6, 8, 10, 12, 14	4.7.6
RT33	Plug		-	-	-	-	4, 6, 8, 10, 12, 14	4.7.7
RT25	Union		-	-	-	4, 6, 8, 10, 12, 14	-	4.7.7
RT14	Equal elbow		-	-	-	4, 6, 8, 10, 12, 14	-	4.7.8
RT16	BSPT swivel elbow		1/8", 1/4", 3/8", 1/2"	-	-	4, 6, 8, 10, 12, 14	-	4.7.8
RT17	Extended BSPT swivel elbow		1/8", 1/4", 3/8"	-	-	4, 6, 8, 10	-	4.7.9
RT18	BSP swivel elbow		-	1/8", 1/4", 3/8", 1/2"	M5x0,8	4, 6, 8, 10, 12, 14	-	4.7.9
RT19	Extended BSP swivel elbow		-	1/8", 1/4", 3/8"	M5x0,8	4, 6, 8, 10	-	4.7.10
RT20	BSP swivel elbow with hexagonal wrench		-	1/8", 1/4", 3/8"	M5x0,8	4, 6, 8, 10	-	4.7.10
RT48	Bulkhead elbow		-		-	4, 6, 8, 10, 12	-	4.7.11
RT49	Stem elbow		-	-	-	4, 6, 8, 10, 12, 14	-	4.7.11
RT15	Equal tee		-	-	-	4, 6, 8, 10, 12, 14	-	4.7.12
RT21	BSPT swivel tee		1/8", 1/4", 3/8", 1/2"	-	-	4, 6, 8, 10, 12	-	4.7.12
RT22	BSP swivel tee		-	1/8", 1/4", 3/8", 1/2"	M5x0,8	4, 6, 8, 10, 12	-	4.7.13
RT23	BSPT swivel side tee		1/8", 1/4", 3/8"	-	-	4, 6, 8, 10	-	4.7.13
RT24	BSP swivel side tee		-	1/8", 1/4", 3/8"	M5x0,8	4, 6, 8, 10	-	4.7.14
RT29	Y piece		-	-	-	4, 6, 8, 10, 12	-	4.7.14

Fittings series RT

Type			Taper threads (BSPT)	Parallel threads (BSP)	Metric threads	For tube Ø mm	Stem Ø mm	Data sheet and code page
RT30	Stem Y		-	-	-	4, 6, 8	4, 6, 8	4.7.15
RT31	BSP swivel Y		-	1/8", 1/4", 3/8"	M5x0,8	4, 6, 8	-	4.7.15
RT46	Equal H swivel union		-	-	-	4, 6, 8, 10	-	4.7.16
RT36	Manifold		-	-	-	4, 6, 8	-	4.7.16
RT43	Double Y union		-	-	-	4, 6, 8	-	4.7.17
RT44	Double Y BSP union		-	1/8", 1/4"	-	4	-	4.7.17
RT28	Single banjo		-	-	-	4, 6, 8, 10	-	4.7.18
RT34	Stem cartridge		-	-	-	4, 6, 8, 10	-	4.7.19

Thread/Tube matching

External Tube Ø	Thread								
	M5x0,8	G1/8	G1/4	G3/8	G1/2	R1/8	R1/4	R3/8	R1/2
Ø 4 mm	●	●	●	-	-	●	●	-	-
Ø 6 mm	●	●	●	-	-	●	●	-	-
Ø 8 mm	-	●	●	●	-	●	●	●	-
Ø 10 mm	-	-	●	●	-	-	●	●	-
Ø 12 mm	-	-	-	●	●	-	-	●	●
Ø 14 mm	-	-	-	●	●	-	-	●	●

Key
● available matching; - not available matching

Main features

Type	Description
RT12	BSP stud. Body in nickel-plated brass, ring in acetalic resin (POM).



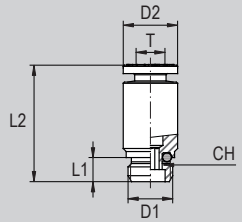

Dimensions

Code	Item	T (ØTube)	D1	D2	L1	L2	CH	Weight (g)
029109	RT 12 04 M7	4	M7x1	7,8	5,5	20	3	-
029110	RT 12 06 M7	6	M7x1	10	4,5	19,5	4	-

Main features

Type	Description
RT12	BSP stud. Fully made of acetalic resin (POM).



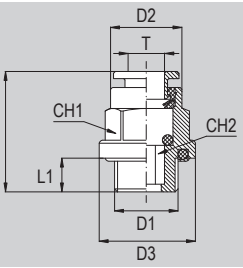

Dimensions

Code	Item	T (ØTube)	D1	D2	D3	L1	L2	CH1	CH2	Weight (g)
029101	RT 12 04 18	4	G1/8”	9,5	15	6	21	10	3	2,3
029102	RT 12 06 18	6	G1/8”	11,5	15	6	24	12	4	2,7
029103	RT 12 06 14	6	G1/4”	11,5	18	7	24	12	4	4,1
029104	RT 12 08 18	8	G1/8”	14	15	6	25,5	14	6	2,9
029105	RT 12 08 14	8	G1/4”	14	18	7	24	14	6	3,8
029106	RT 12 08 38	8	G3/8”	14	22	7	24	14	6	5,9
029107	RT 12 10 14	10	G1/4”	16	18	7	27	16	8	4
029108	RT 12 10 38	10	G3/8”	16	22	7	25	16	8	6,2

Main features

Type	Description
RT13	BSP stem adapter. Fully made of acetalic resin (POM).



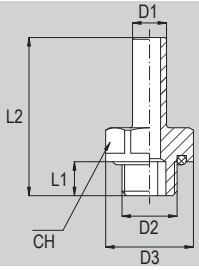

Dimensions

Code	Item	D1	D2	D3	L1	L2	CH	Weight (g)
029121	RT 13 04 18	4	G1/8"	15,5	6	27	14	1,9
029122	RT 13 06 18	6	G1/8"	15,5	6	30	14	2
029123	RT 13 06 14	6	G1/4"	18,5	8	33,5	17	3,2
029124	RT 13 08 18	8	G1/8"	15,5	6	32	14	2,1
029125	RT 13 08 14	8	G1/4"	18,5	8	35,5	17	3,5
029126	RT 13 08 38	8	G3/8"	23,5	9	37	21	5,4
029127	RT 13 10 14	10	G1/4"	18,5	8	37,5	17	3,5
029128	RT 13 10 38	10	G3/8"	23,5	9	39	21	5,5

Main features

Type	Description
RT26	Reducer. Fully made of acetalic resin (POM).



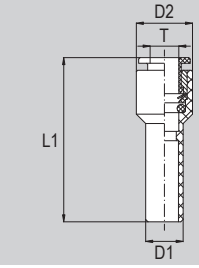

Dimensions

Code	Item	T (ØTube)	D1	D2	L1	Weight (g)
029351	RT 26 04 06	4	6	10	31,5	1,7
029352	RT 26 04 08	4	8	10	32,5	2
029353	RT 26 04 10	4	10	10	34,5	3
029354	RT 26 06 08	6	8	12	37	2,6
029355	RT 26 06 10	6	10	12	37	3,1
029356	RT 26 06 12	6	12	12	39	3,9
029357	RT 26 08 10	8	10	14	39,5	3,7
029358	RT 26 08 12	8	12	14	41,5	4,4
029359	RT 26 10 12	10	12	16	45	5,3
029361	RT 26 10 14	10	14	16	45	6,2
029362	RT 26 12 14	12	14	16	47	7,1

Main features

Type	Description
RT27	Stem increaser. Fully made of acetalic resin (POM).



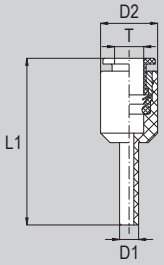

Dimensions

Code	Item	T (ØTube)	D1	D2	L1	Weight (g)
029371	RT 27 06 04	6	4	12	34	2,1
029372	RT 27 08 06	8	6	14	36,5	2,9

Main features

Type	Description
RT32	Stem. Fully made of acetalic resin (POM).



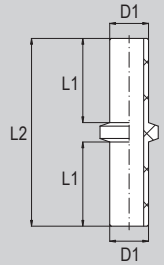

Dimensions

Code	Item	D1	L1	L2	Weight (g)
029431	RT 32 04 04	4	15	33	0,6
029432	RT 32 06 06	6	18	40	1,3
029433	RT 32 08 08	8	20	44	1,8
029434	RT 32 10 10	10	22	48	3,1
029435	RT 32 12 12	12	25	54	4,2
029436	RT 32 14 14	14	25	54	4,8

Main features

Type	Description
RT33	Plug. Fully made of acetalic resin (POM).



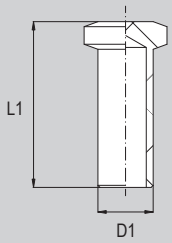

Dimensions

Code	Item	D1	L1	Weight (g)
029441	RT 33 04 04	4	18	0,3
029442	RT 33 06 06	6	22	0,9
029443	RT 33 08 08	8	24	1,3
029444	RT 33 10 10	10	26	2
029445	RT 33 12 12	12	40	3,3
029446	RT 33 14 14	14	40	4,2

Main features

Type	Description
RT25	Union. Fully made of acetalic resin (POM).



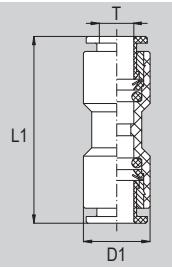

Dimensions

Code	Item	T (ØTube)	D1	L1	Weight (g)
029341	RT 25 04 04	4	10	26,5	2,2
029342	RT 25 06 06	6	12	34	3,4
029345	RT 25 06 04	6-4	12	31	2,8
029343	RT 25 08 08	8	14	35,5	4,3
029346	RT 25 08 06	8-6	14	35	4,4
029344	RT 25 10 10	10	16	37,5	5,5
029347	RT 25 10 08	10-8	16	36,5	7
029348	RT 25 12 12	12	19	42	7,6
029349	RT 25 12 08	12-8	19	41,5	9,5
029350	RT 25 12 10	12-10	19	41,5	8,6
029360	RT 25 14 14	14	22,5	48	13

Main features

Type	Description
RT14	Equal elbow. Fully made of acetalic resin (POM).



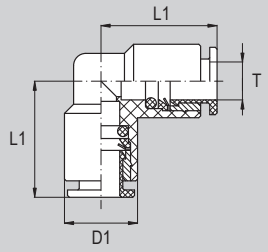

Dimensions

Code	Item	T (ØTube)	D1	L1	Weight (g)
029141	RT 14 04 04	4	10	15,5	2,2
029142	RT 14 06 06	6	12	19,7	3,8
029143	RT 14 08 08	8	14	21,5	4,9
029144	RT 14 10 10	10	16	23,5	6,3
029145	RT 14 12 12	12	19	27	9,6
029146	RT 14 14 14	14	22,5	30,5	15,5

Main features

Type	Description
RT16	BSPT swivel elbow. Body in acetalic resin (POM), nickel-plated brass screw with taper thread.





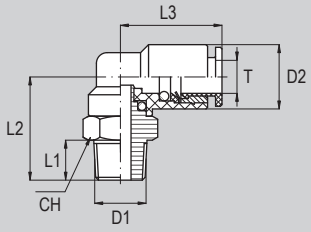

Dimensions

Code	Item	T (ØTube)	D1	D2	L1	L2	L3	CH	Weight (g)
029161	RT 16 04 18	4	R1/8”	10	7,5	17	15,5	10	6,4
029162	RT 16 04 14	4	R1/4”	10	11	20,5	15,5	14	11,5
029163	RT 16 06 18	6	R1/8”	12	7,5	18,8	20	12	8,4
029164	RT 16 06 14	6	R1/4”	12	11	23,3	20	14	13,6
029165	RT 16 08 18	8	R1/8”	14	7,5	19,5	21,5	12	9
029166	RT 16 08 14	8	R1/4”	14	11	24	21,5	14	14,1
029167	RT 16 08 38	8	R3/8”	14	11,5	24,5	21,5	17	19
029168	RT 16 10 14	10	R1/4”	16	11	25,5	24	16	17,3
029169	RT 16 10 38	10	R3/8”	16	11,5	26,5	24	17	21,7
029170	RT 16 12 38	12	R3/8”	19	11,5	28,5	28,5	20	32,8
029171	RT 16 12 12	12	R1/2”	19	14	31,5	28,5	22	41,4
029172	RT 16 14 38	14	R3/8”	22,5	11,5	29,5	32,3	20	34,6
029173	RT 16 14 12	14	R1/2”	22,5	14	32,5	32,3	22	43,2

Main features

Type	Description
RT17	Extended BSPT swivel elbow. Body in acetalic resin (POM), nickel-plated brass screw with taper thread.





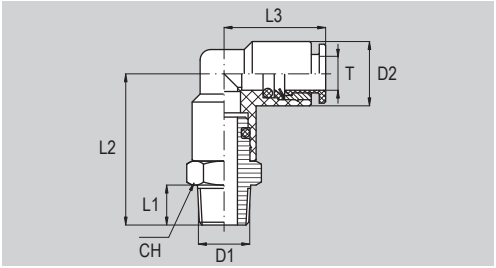

Dimensions

Code	Item	T (ØTube)	D1	D2	L1	L2	L3	CH	Weight (g)
029181	RT 17 04 18	4	R1/8”	10	7,5	26	15,5	10	10
029182	RT 17 04 14	4	R1/4”	10	11	30	15,5	14	16,1
029183	RT 17 06 18	6	R1/8”	12	7,5	33,3	20	12	17,6
029184	RT 17 06 14	6	R1/4”	12	11	37,8	20	14	20,5
029185	RT 17 08 18	8	R1/8”	14	7,5	34	21,5	12	18
029186	RT 17 08 14	8	R1/4”	14	11	38,5	21,5	14	20,8
029187	RT 17 08 38	8	R3/8”	14	11,5	39	21,5	17	27,4
029188	RT 17 10 14	10	R1/4”	16	11	41,9	24	16	36,4
029189	RT 17 10 38	10	R3/8”	16	11,5	42,9	24	17	35,1

Main features

Type	Description
RT18	BSP swivel elbow. Body in acetalic resin (POM), nickel-plated brass screw with sealing O-ring.



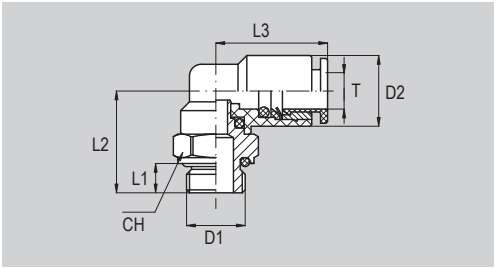

Dimensions

Code	Item	T (ØTube)	D1	D2	L1	L2	L3	CH	Weight (g)
029201	RT 18 04 M5	4	M5x0,8	10	4	14,8	15,5	9	4,6
029202	RT 18 04 18	4	G1/8”	10	5	15	15,5	13	7,1
029203	RT 18 04 14	4	G1/4”	10	6,5	17	15,5	16	11,1
029204	RT 18 06 M5	6	M5x0,8	12	4	15,3	20	12	7,9
029205	RT 18 06 18	6	G1/8”	12	5	17,3	20	12	8,4
029206	RT 18 06 14	6	G1/4”	12	6,5	19,3	20	15	12,5
029207	RT 18 08 18	8	G1/8”	14	5	18	21,5	12	8,8
029208	RT 18 08 14	8	G1/4”	14	6,5	20	21,5	15	13
029209	RT 18 08 38	8	G3/8”	14	7	21,5	21,5	20	21,4
029210	RT 18 10 14	10	G1/4”	16	6,5	21,5	24	16	15,6
029211	RT 18 10 38	10	G3/8”	16	6,5	23,5	24	20	22,8
029212	RT 18 12 38	12	G3/8”	19	7	24	28,5	20	27,2
029213	RT 18 12 12	12	G1/2”	19	8,5	28,5	28,5	20	34,9
029214	RT 18 14 38	14	G3/8”	22,5	7	25	32,3	20	28,8
029215	RT 18 14 12	14	G1/2”	22,5	8,5	29,5	32,3	20	36,5

Main features

Type	Description
RT19	Extended BSP swivel elbow. Body in acetalic resin (POM), nickel-plated brass screw with sealing O-ring.



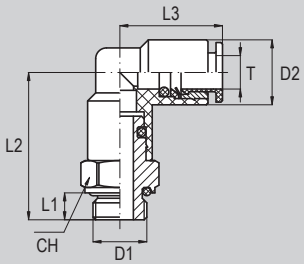

Dimensions

Code	Item	T (ØTube)	D1	D2	L1	L2	L3	CH	Weight (g)
029221	RT 19 04 M5	4	M5x0,8	10	4	23,8	15,5	9	9,1
029222	RT 19 04 18	4	G1/8”	10	5	24	15,5	13	10,2
029223	RT 19 04 14	4	G1/4”	10	6,5	26	15,5	16	13,7
029224	RT 19 06 M5	6	M5x0,8	12	4	29,8	20	12	20,8
029225	RT 19 06 18	6	G1/8”	12	5	31,8	20	13	19,6
029226	RT 19 06 14	6	G1/4”	12	6,5	33,8	20	16	20,5
029227	RT 19 08 18	8	G1/8”	14	5	32,5	21,5	13	20
029228	RT 19 08 14	8	G1/4”	14	6,5	34,5	21,5	16	20,9
029229	RT 19 08 38	8	G3/8”	14	7	36	21,5	20	29,4
029230	RT 19 10 14	10	G1/4”	16	6,5	36,9	24	16	32,3
029231	RT 19 10 38	10	G3/8”	16	7	38,9	24	20	36,8

Main features

Type	Description
RT20	BSP swivel elbow with hexagonal wrench. Body in acetalic resin (POM), nickel-plated brass screw with sealing O-ring.



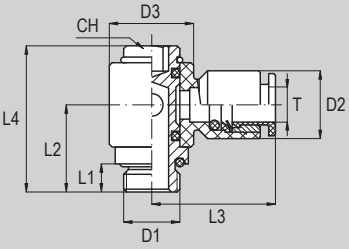

Dimensions

Code	Item	T (ØTube)	D1	D2	D3	L1	L2	L3	L4	CH	Weight (g)
029241	RT 20 04 M5	4	M5x0,8	10	9	4	12	17,6	19,1	3	5,4
029242	RT 20 04 18	4	G1/8”	10	13	5	15	19,1	25,5	4	12,2
029250	RT 20 06 M5	6	M5x0,8	12	9	4	12	19	21,5	3	5,9
029243	RT 20 06 18	6	G1/8”	12	13	5	15	22,7	25,5	4	12,8
029244	RT 20 06 14	6	G1/4”	12	16	6,5	17,5	24,3	29	5	21,8
029245	RT 20 08 18	8	G1/8”	14	13	5	15	23	25,5	4	13
029246	RT 20 08 14	8	G1/4”	14	16	6,5	17,5	29	24,6	5	22,2
029247	RT 20 08 38	8	G3/8”	14	20	7	19,5	26,5	32,5	6	34,9
029248	RT 20 10 14	10	G1/4”	16	16	6,5	17,5	29	27	5	22,5
029249	RT 20 10 38	10	G3/8”	16	20	7	19,5	28,5	32,5	6	35,5

Main features

Type	Description
RT48	Bulkhead elbow. Body in acetalic resin (POM), nickel-plated brass screw.



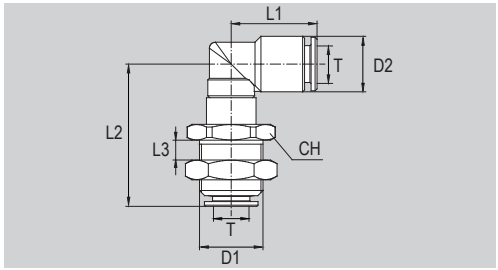

Dimensions

Code	Item	T (ØTube)	D1	D2	L1	L2	L3 (max)	CH	Weight (g)
029500	RT 48 04 04	4	M12x0,75	10	15,5	27,1	5,5	15	18
029501	RT 48 06 06	6	M14x1	12	20	33	5,7	18	32,8
029502	RT 48 08 08	8	M16x1	14	21,5	35,7	7,7	20	39,6
029503	RT 48 10 10	10	M18x1	16	24	40,3	9,2	22	52,8
029504	RT 48 12 12	12	M20x1	19	28,5	44,5	9,8	24	71,5

Main features

Type	Description
RT49	Stem elbow Fully made of acetalic resin (POM).



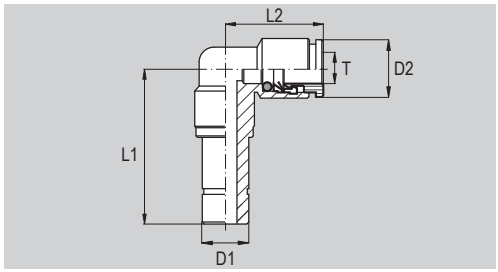

Dimensions

Code	Item	T (ØTube)	D1	D2	L1	L2	Weight (g)
029514	RT 49 04 04	4	4	10	21	15,5	1,8
029515	RT 49 06 06	6	6	12	25,5	20	3,2
029516	RT 49 08 08	8	8	14	28,8	21,5	3,8
029517	RT 49 10 10	10	10	16	32,4	24	6,7
029518	RT 49 12 12	12	12	19	36	28,5	9,5
029519	RT 49 14 14	14	14	22,5	36,9	32,3	11,5

Main features

Type	Description
RT15	Equal tee. Fully made of acetalic resin (POM).



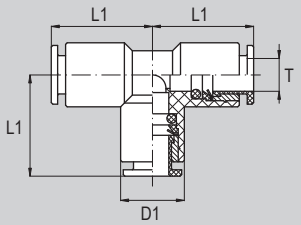

Dimensions

Code	Item	T (ØTube)	D1	L1	Weight (g)
029151	RT 15 04 04	4	10	15,2	3,3
029152	RT 15 06 06	6	12	19,7	5,4
029153	RT 15 08 08	8	14	21,5	7,1
029154	RT 15 10 10	10	16	23,5	8,8
029155	RT 15 12 12	12	19	27	13,8
029156	RT 15 14 14	14	22,5	30,5	21,7

Main features

Type	Description
RT21	BSPT swivel tee. Body in acetalic resin (POM), nickel-plated brass screw with taper thread.





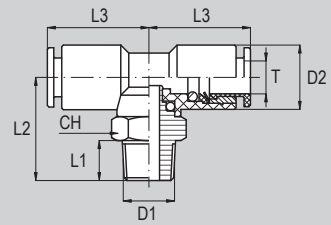

Dimensions

Code	Item	T (ØTube)	D1	D2	L1	L2	L3	CH	Weight (g)
029261	RT 21 04 18	4	R1/8”	10	7,5	17	15,7	10	7,4
029262	RT 21 04 14	4	R1/4”	10	11	20,5	15,7	14	13,8
029263	RT 21 06 18	6	R1/8”	12	7,5	18,8	20,2	12	10
029264	RT 21 06 14	6	R1/4”	12	11	23,3	20,2	14	15,5
029265	RT 21 08 18	8	R1/8”	14	7,5	19,5	21,7	12	11,2
029266	RT 21 08 14	8	R1/4”	14	11	24	21,7	14	16,3
029267	RT 21 08 38	8	R3/8”	14	11,5	24,5	21,7	17	21,3
029268	RT 21 10 14	10	R1/4”	16	11	25,5	24	16	19,9
029269	RT 21 10 38	10	R3/8”	16	11,5	26,5	24	17	27
029270	RT 21 12 38	12	R3/8”	19	11,5	28,5	28,5	20	36,3
029271	RT 21 12 12	12	R1/2”	19	14	31,5	28,5	22	44,8

Main features

Type	Description
RT22	BSP swivel tee. Body in acetalic resin (POM), nickel-plated brass screw with sealing O-ring.



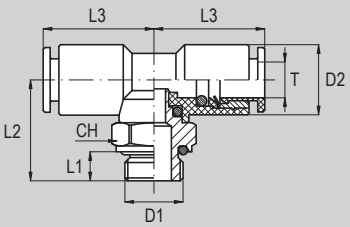

Dimensions

Code	Item	T (ØTube)	D1	D2	L1	L2	L3	CH	Weight (g)
029281	RT 22 04 M5	4	M5x0,8	10	4	14,8	15,7	9	5,6
029282	RT 22 04 18	4	G1/8”	10	5	15	15,7	13	8,1
029283	RT 22 04 14	4	G1/4”	10	6,5	17	15,7	16	12
029284	RT 22 06 M5	6	M5x0,8	12	4	15,3	20,2	12	9,2
029285	RT 22 06 18	6	G1/8”	12	5	17,3	20,2	12	9,8
029286	RT 22 06 14	6	G1/4”	12	6,5	19,3	20,2	15	13,6
029287	RT 22 08 18	8	G1/8”	14	5	18	21,7	12	11,1
029288	RT 22 08 14	8	G1/4”	14	6,5	20	21,7	15	15,1
029289	RT 22 08 38	8	G3/8”	14	7	21,5	21,7	20	23,7
029290	RT 22 10 14	10	G1/4”	16	6,5	21,5	24	16	18
029291	RT 22 10 38	10	G3/8”	16	7	23,5	24	20	25,2
029292	RT 22 12 38	12	G3/8”	19	7	24	28,5	20	30,5
029293	RT 22 12 12	12	G1/2”	19	8,5	28,5	28,5	20	38,1

Main features

Type	Description
RT23	BSPT swivel side tee. Body in acetalic resin (POM), nickel-plated brass screw with taper thread.

PTFE



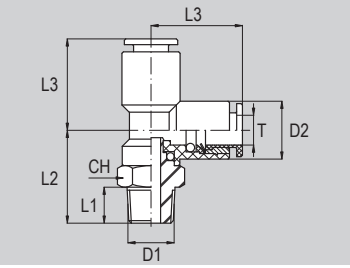

Dimensions

Code	Item	T (ØTube)	D1	D2	L1	L2	L3	CH	Weight (g)
029301	RT 23 04 18	4	R1/8”	10	7,5	17	15,5	10	7,4
029302	RT 23 04 14	4	R1/4”	10	11	20,5	15,5	14	12,6
029303	RT 23 06 18	6	R1/8”	12	7,5	18,8	20	12	10,1
029304	RT 23 06 14	6	R1/4”	12	11	23,3	20	14	15,2
029305	RT 23 08 18	8	R1/8”	14	7,5	19,5	21,5	12	10,9
029306	RT 23 08 14	8	R1/4”	14	11	24	21,5	14	16,2
029307	RT 23 08 38	8	R3/8”	14	11,5	24,5	21,5	17	23,7
029308	RT 23 10 14	10	R1/4”	16	11	25,5	24	16	22,5
029309	RT 23 10 38	10	R3/8”	16	11,5	26,5	24	17	26,7

Main features

Type	Description
RT24	BSP swivel side tee. Body in acetalic resin (POM), nickel-plated brass screw with sealing O-ring.



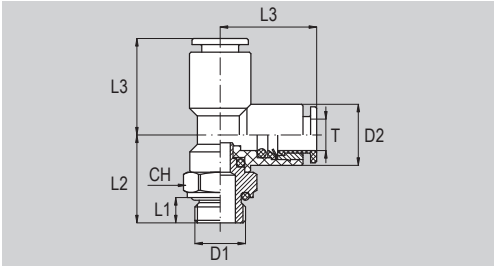

Dimensions

Code	Item	T (ØTube)	D1	D2	L1	L2	L3	CH	Weight (g)
029321	RT 24 04 M5	4	M5x0,8	10	4	14,8	15,5	9	5,6
029322	RT 24 04 18	4	G1/8”	10	5	15	15,5	13	8,1
029323	RT 24 04 14	4	G1/4”	10	6,5	17	15,5	16	13
029324	RT 24 06 M5	6	M5x0,8	12	4	15,3	20	12	10,3
029325	RT 24 06 18	6	G1/8”	12	5	17,3	20	12	9,9
029326	RT 24 06 14	6	G1/4”	12	6,5	19,3	20	15	13,9
029327	RT 24 08 18	8	G1/8”	14	5	18	21,5	12	10,7
029328	RT 24 08 14	8	G1/4”	14	6,5	20	21,5	15	14,7
029329	RT 24 08 38	8	G3/8”	14	7	21,5	21,5	20	27,4
029330	RT 24 10 14	10	G1/4”	16	6,5	21,5	24	16	20
029331	RT 24 10 38	10	G3/8”	16	7	23,5	24	20	25,1

Main features

Type	Description
RT29	Y piece. Fully made of acetalic resin (POM).



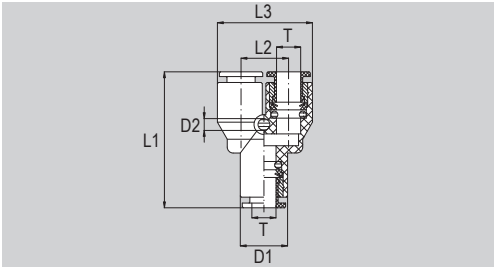

Dimensions

Code	Item	T (ØTube)	D1	D2	L1	L2	L3	Weight (g)
029401	RT 29 04 04	4	10	2,7	28,3	10,7	20,7	3,5
029402	RT 29 06 06	6	12	3,2	35,9	13,2	25,2	5,7
029403	RT 29 08 08	8	14	3,2	38,5	15,2	29,2	7,9
029404	RT 29 10 10	10	16	3,2	40,6	18,5	34,5	9,7
029405	RT 29 12 12	12	19	3,2	45	21	40	15,5

Main features

Type	Description
RT30	Stem Y. Fully made of acetalic resin (POM).



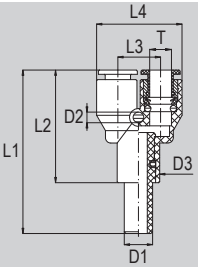

Dimensions

Code	Item	T (ØTube)	D1	D2	D3	L1	L2	L3	L4	Weight (g)
029411	RT 30 04 04	4	4	2,7	10	42,3	25,8	10,7	20,7	3,8
029412	RT 30 04 06	4	6	2,7	10	44,6	25,8	10,7	20,7	4,2
029413	RT 30 04 08	4	8	2,7	10	46,3	25,8	10,7	20,7	4,5
029414	RT 30 06 06	6	6	3,2	12	51,9	32,9	13,2	25,2	6,3
029415	RT 30 08 08	8	8	3,2	14	54,5	35,5	15,2	29,2	8,7

Main features

Type	Description
RT31	BSP swivel Y. Body in acetalic resin (POM), nickel-plated brass screw with sealing O-ring.



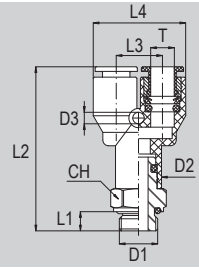

Dimensions

Code	Item	T (ØTube)	D1	D2	D3	L1	L2	L3	L4	CH	Weight (g)
029421	RT 31 04 M5	4	M5x0,8	10	2,7	4	33,8	10,7	20,5	9	6,5
029422	RT 31 04 18	4	G1/8”	10	2,7	5	34,8	10,7	20,5	13	9
029423	RT 31 04 14	4	G1/4”	10	2,7	6,5	36,8	10,7	20,5	16	13,4
029424	RT 31 06 18	6	G1/8”	12	3,2	5	41,9	13,2	25,2	13	11,5
029425	RT 31 06 14	6	G1/4”	12	3,2	6,5	43,9	13,2	25,2	16	16,2
029426	RT 31 08 18	8	G1/8”	14	3,2	5	43	15,2	29,2	14	15,9
029427	RT 31 08 14	8	G1/4”	14	3,2	6,5	46,5	15,2	29,2	16	18,8
029428	RT 31 08 38	8	G3/8”	14	3,2	7	48,5	15,2	29,2	20	27,7

Main features

Type	Description
RT46	Equal H swivel union. Fully made of acetalic resin (POM).



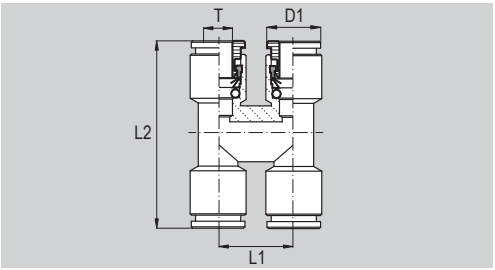

Dimensions

Code	Item	T (ØTube)	D1	L1	L2	Weight (g)
029507	RT 46 04 04	4	10	14	31,4	9,2
029508	RT 46 06 06	6	12	17,6	40,4	11,9
029509	RT 46 08 08	8	14	19	43,4	14,1
029510	RT 46 10 10	10	16	23	48	25,8

Main features

Type	Description
RT36	Manifold. Fully made of acetalic resin (POM).



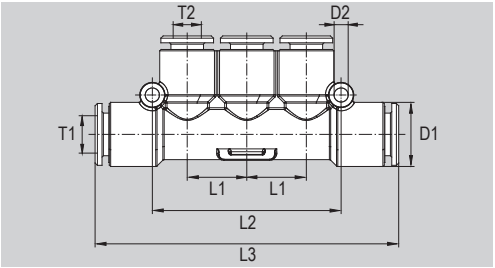

Dimensions

Code	Item	T1 (ØTube)	T2 (ØTube)	L1	L2	L3	D1	D2	Weight (g)
029462	RT 36 06 04	6	4	11	35,2	59	12	3,2	8
029463	RT 36 08 06	8	6	13	41,2	66	14	3,2	11,2

Main features

Type	Description
RT43	Double Y union. Body in acetalic resin (POM), bottom connection in nickel-plated brass.



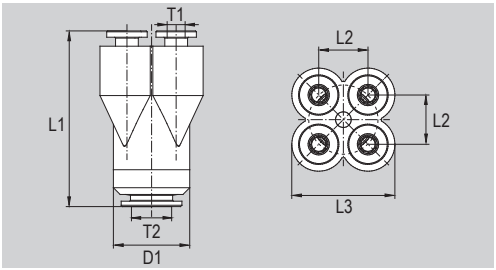

Dimensions

Code	Item	T1 (ØTube)	T2 (ØTube)	D1	L1	L2	L3	Weight (g)
029406	RT 43 04 06	4	6	17	38,5	11	23	27,8
029408	RT 43 04 08	4	8	17	38,5	11	23	25

Main features

Type	Description
RT44	Double Y BSP union. Body in acetalic resin (POM), nickel-plated brass screw with sealing O-ring.



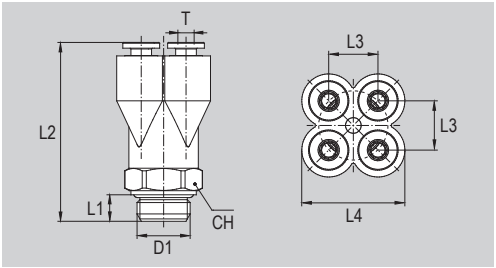

Dimensions

Code	Item	T (ØTube)	D1	L1	L2	L3	L4	CH	Weight (g)
029409	RT 44 04 18	4	G1/8"	5	41	11	23	17	32,8
029410	RT 44 04 14	4	G1/4"	6,5	43	11	23	17	32

Main features

Type	Description
RT28	Single banjo. Fully made of acetalic resin (POM). Compatible with bolt types R31, R32, R59 and R60. Compatible with flow regulators types V14 and V15 (for M5 with coding M5R only). Compatible with accessories with integrated function types V45, V46 and V47.



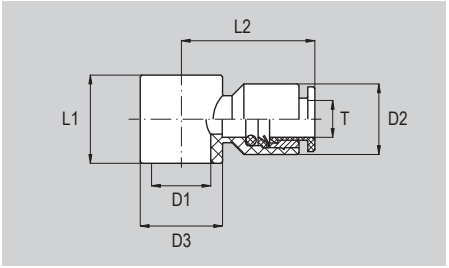

Dimensions

Code	Item	T (ØTube)	D1	D2	D3	L1	L2	Weight (g)
029391	RT 28 04 M5	4	M5	10	9,7	10	17,6	1,9
029400	RT 28 04 M5R	4	7	10	9,7	10	17,6	2,3
029392	RT 28 04 18	4	1/8”	10	15	15	19,1	2,9
029407	RT 28 06 M5R	6	7	12	9,7	10	21,5	3,1
029393	RT 28 06 18	6	1/8”	12	15	15	22,7	3,5
029394	RT 28 06 14	6	1/4”	12	18	17	24,3	4,2
029395	RT 28 08 18	8	1/8”	14	15	15	23	3,7
029396	RT 28 08 14	8	1/4”	14	18	17	24,6	4,6
029397	RT 28 08 38	8	3/8”	14	23	20	26,5	6,4
029398	RT 28 10 14	10	1/4"	16	18	17	27	5,2
029399	RT 28 10 38	10	3/8”	16	23	20	28,5	8,4

Main features

Type	Description
RT34	Stem cartridge. Body in acetalic resin (POM) with brass reinforcement.



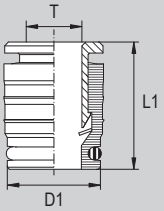

Dimensions

Code	Item	T (ØTube)	D1	L1	Weight (g)
029451	RT 34 04 04	4	9,3	14,5	2,8
029452	RT 34 06 06	6	11,5	17	4,6
029453	RT 34 08 08	8	13,7	17,5	6,4
029454	RT 34 10 10	10	15,8	19	8,3

Cartridge seat drilling plan

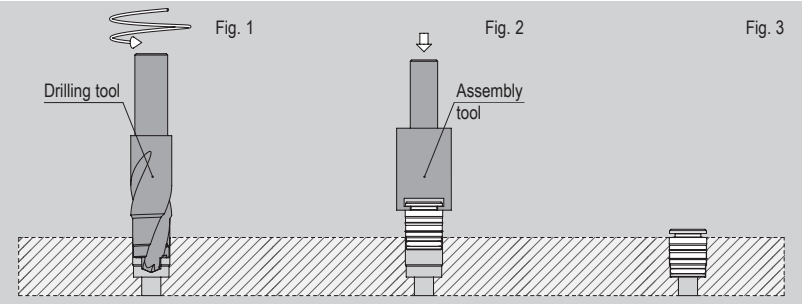

Drill the cartridge seat with the drilling tool (fig. 1) following the instructions (fig. 4);

Then manually press the cartridge inside the seat, until it rests on the seat plane, with the Assembly Tool (fig.2);

Doing this way will ensure that the insertion has been made (fig. 3).

Drilling tool and Assembly tool available on request. For further informations, please contact the sales department.

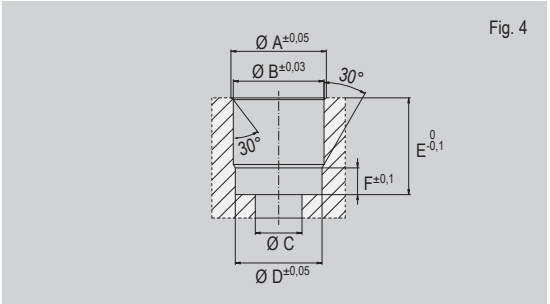

T (ØTube)	Ø A	ØB	ØC	ØD	E	F
4	9,5	9,2	3	8,6	12	3,2
6	11,7	11,4	5	10,8	14	4
8	13,9	13,6	7	13	14,5	4
10	16	15,7	9	15,1	16	4

Notes

RAPID
fittings



Find out our
key products

- **Solution for most applications**
- **Easy and intuitive choice**
- **Excellent value for money**
- **Wide availability**
- **Fast delivery**

Main features and certifications

Rapid fittings in nickel-plated brass. Available in many versions, threads and tube diameters.
Supplied as standard in compliance to Reach and RoHS directives.

Series C

from page 4.20.10



Series of rapid fittings, for connecting Nylon and Polyurethane tubes, to use in all those applications needing a safer tube-fitting connection. Available in different configurations, with taper BSPT threads and BSP threads, in various sizes. Some types are equipped with washer and O-ring.



Code key

Series	Type*	Tube*	Thread (or Ø Tube 2)*
C	**11**	**06**	**18**
C	11, 12, 13, 14, 15, 16, 17, 18, 19, 20, 21, 22, 23, 24, 25, 26, 27, 29, 30, 31, 32, 34, 36, 37, 38, 40	04 = Ø 4 - 2,5 05 = Ø 5 - 3 06 = Ø 6 - 4 08 = Ø 8 - 6 10 = Ø 10 - 8 12 = Ø 12 - 10 15 = Ø 15 - 12,5	M5 = M5x0,8 12x1,25 = M12x1,25 12x1,5 = M12x1,5 18 = 1/8" 14 = 1/4" 38 = 3/8" 12 = 1/2"

How to order

Series	Type	Ø Tube	Thread
C	**11**	**06**	**18**

Notes

For standard materials see the table below.

* For matching between fitting type, tube diameter and thread, see from page 4.20.11; for the specific type, see the following pages.

Technical data

Version		Series C
Fluid		Compressed air
Maximum pressure		Always higher than the tube
Vacuum		-99 KPa
Temperature range		-20°C ÷ +90°C
Parallel threads		UNI - ISO 228 / 1 (BSP)
Taper threads		UNI EN 10226-1 (BSPT)
Metric threads		UNI EN ISO 965-1
Tubes		Calibrated Nylon (PA6), PU and Rilsan (PA11)
Tubes tolerance	Ø 4 mm ÷ Ø 10 mm	±0,07 mm
	Ø 12 mm ÷ Ø 15 mm	±0,1 mm

Standard materials

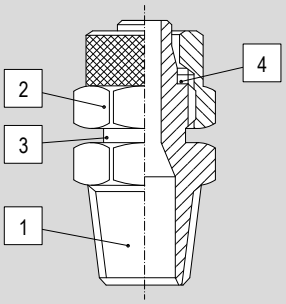

Position	Description	Material
1	Body	Nickel-plated brass
2	Nut	Nickel-plated brass
3	Washer*	Acetalic resin (POM)
4	Seal*	NBR

*Where present

Fittings series C

Type			Taper threads (BSPT)	Parallel threads (BSP)	Metric threads	For tube Ø mm	Data sheet and code page
C11	BSPT stud		1/8", 1/4", 3/8", 1/2"	-	-	4-2,5, 5-3, 6-4, 8-6, 10-12, 12-10, 15-12,5	4.20.13
C12	BSP stud		-	1/8", 1/4", 3/8", 1/2"	M5x0,8, M12x1,25, M12x1,5	4-2,5, 5-3, 6-4, 8-6, 10-12, 12-10, 15-12,5	4.20.14
C29	BSPT swivel stud		1/8", 1/4"	-	-	6-4, 8-6, 10-12	4.20.13
C13	Female BSP stud		-	1/8", 1/4", 3/8"	-	5-3, 6-4, 8-6, 10-12, 12-10	4.20.15
C14	Union		-	-	-	5-3, 6-4, 8-6, 10-12, 12-10, 15-12,5	4.20.14
C15	Bulkhead		-	-	-	5-3, 6-4, 8-6, 10-12, 12-10, 15-12,5	4.20.15
C16	BSPT elbow		1/8", 1/4", 3/8", 1/2"	-	M5x0,8, M12x1,25, M12x1,5	4-2,5, 5-3, 6-4, 8-6, 10-12, 12-10, 15-12,5	4.20.16
C17	Female BSP elbow		-	1/8", 1/4", 3/8"	-	5-3, 6-4, 8-6, 10-12, 12-10	4.20.16
C18	Equal elbow		-	-	-	5-3, 6-4, 8-6, 10-12, 12-10, 15-12,5	4.20.17
C40	BSP swivel elbow		-	1/8", 1/4"	M5x0,8	6-4, 8-6, 10-12	4.20.17
C30	Single banjo elbow with hexagonal wrench		-	1/8", 1/4", 3/8"	-	6-4, 8-6, 10-12	4.20.18
C34	Single banjo elbow		-	1/8", 1/4", 3/8"	M5x0,8	4-2,5, 5-3, 6-4, 8-6, 10-12	4.20.18
C20	BSPT tee		1/8", 1/4", 3/8", 1/2"	-	-	5-3, 6-4, 8-6, 10-12, 12-10, 15-12,5	4.20.19
C31	BSP swivel tee with hexagonal wrench		-	1/8", 1/4", 3/8"	-	6-4, 8-6, 10-12	4.20.19
C36	Single banjo tee		-	1/8", 1/4", 3/8"	M5x0,8	5-3, 6-4, 8-6, 10-12	4.20.20
C19	Equal tee		-	-	-	5-3, 6-4, 8-6, 10-12, 12-10, 15-12,5	4.20.20
C21	BSPT side tee		1/8", 1/4", 3/8", 1/2"	-	-	5-3, 6-4, 8-6, 10-12, 12-10, 15-12,5	4.20.21
C22	Equal +		-	-	-	5-3, 6-4, 8-6, 10-12, 12-10, 15-12,5	4.20.21
C23	Single banjo		-	-	-	4-2,5, 5-3, 6-4, 8-6, 10-12	4.20.22
C24	Double banjo		-	-	-	5-3, 6-4, 8-6, 10-12	4.20.22
C37	Reduced single banjo		-	-	-	5-3, 6-4, 8-6, 10-12	4.20.23
C38	Reduced double banjo		-	-	-	5-3, 6-4, 8-6, 10-12	4.20.23
C25	Reduced hollow bolt		-	1/8", 1/4"	M5x0,8	-	4.20.24

Fittings series C

Type			Taper threads (BSPT)	Parallel threads (BSP)	Metric threads	For tube Ø mm	Data sheet and code page
C26	Reduced double hollow bolt		-	1/8", 1/4"	-	-	4.20.24
C27	Nut		-	-	-	4, 5, 6, 8, 10, 12, 15	4.20.25
C32	Nut with spring		-	-	-	6, 8, 10	4.20.25

Thread/Tube matching

Tube Ø	Thread										
	M5x0,8	M12x1,25	M12x1,5	G1/8"	G1/4"	G3/8"	G1/2"	R1/8"	R1/4"	R3/8"	R1/2"
Ø 4-2,5	●	-	-	●	-	-	-	●	-	-	-
Ø 5-3	●	-	-	●	-	-	-	●	-	-	-
Ø 6-4	●	●	●	●	●	●	-	●	●	●	-
Ø 8-6	-	-	-	●	●	●	-	●	●	●	-
Ø 10-8	-	-	-	●	●	●	●	●	●	●	●
Ø 12-10	-	-	-	-	-	●	●	-	-	●	●
Ø 15-12,5	-	-	-	-	-	-	●	-	-	-	●

Key
● available matching; - not available matching

Main features

Type	Description
C11	BSPT stud. In nickel-plated brass.



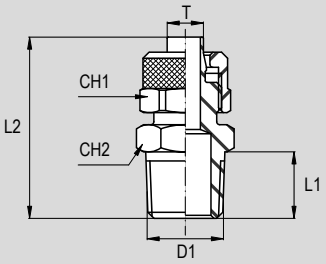

Dimensions

Code	Item	T (ØTube)	D1	L1	L2	CH1	CH2	Weight (g)
021001	C 11 04 18	4-2,5	R1/8”	7,5	23	7	11	-
021003	C 11 05 18	5-3	R1/8”	7,5	25,5	12	11	-
021004	C 11 06 18	6-4	R1/8”	7,5	25,5	12	11	-
021005	C 11 06 14	6-4	R1/4”	11	29	12	14	-
021006	C 11 06 38	6-4	R3/8”	11,5	31	12	17	-
021007	C 11 08 18	8-6	R1/8”	7,5	26,5	14	13	-
021008	C 11 08 14	8-6	R1/4”	11	30	14	14	-
021009	C 11 08 38	8-6	R3/8”	11,5	31	14	17	-
021016	C 11 10 18	10-8	R1/8”	7,5	29	16	14	-
021010	C 11 10 14	10-8	R1/4”	11	32,5	16	14	-
021011	C 11 10 38	10-8	R3/8”	11,5	33	16	17	-
021012	C 11 10 12	10-8	R1/2”	14	36,5	16	22	-
021013	C 11 12 38	12-10	R3/8”	11,5	34,5	19	17	-
021014	C 11 12 12	12-10	R1/2”	14	38	19	22	-
021015	C 11 15 12	15-12,5	R1/2”	14	40,5	22	22	-

Main features

Type	Description
C29	BSPT swivel stud. In nickel-plated brass.



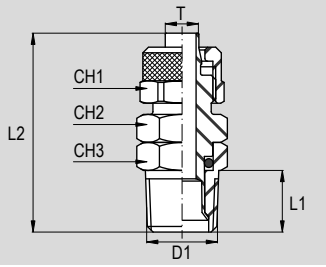

Dimensions

Code	Item	T (ØTube)	D1	L1	L2	CH1	CH2	CH3	Weight (g)
021421	C 29 06 18	6-4	R1/8”	8	37	12	12	12	16,3
021422	C 29 06 14	6-4	R1/4”	11	40	12	14	14	27,2
021423	C 29 08 18	8-6	R1/8”	8	37	14	12	12	20,4
021424	C 29 08 14	8-6	R1/4”	11	40	14	14	14	30,6
021425	C 29 10 14	10-8	R1/4”	11	42	16	14	14	32,1

Main features

Type	Description
C12	BSP stud. In nickel-plated brass.



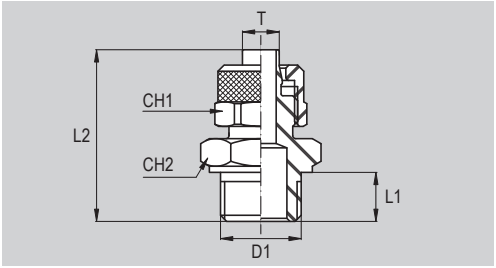

Dimensions

Code	Item	T (ØTube)	D1	L1	L2	CH1	CH2	Weight (g)
021030	C 12 04 M5	4-2,5	M5x0,8	5	19	7	7	-
021031	C 12 04 18	4-2,5	G1/8"	6	22	7	14	-
021032	C 12 05 M5	5-3	M5x0,8	5	21	8	8	-
021033	C 12 05 18	5-3	G1/8"	6	24,5	12	14	-
021034	C 12 06 M5	6-4	M5x0,8	5	21	9	8	-
021049	C 12 06 12x1,25	6-4	M12x1,25	15	34	12	14	-
021050	C 12 06 12x1,5	6-4	M12x1,5	15	34	12	14	-
021035	C 12 06 18	6-4	G1/8"	6	24,5	12	14	-
021036	C 12 06 14	6-4	G1/4"	8	27	12	17	-
021046	C 12 06 38	6-4	G3/8"	9	29	12	20	-
021037	C 12 08 18	8-6	G1/8"	6	25,5	14	14	-
021038	C 12 08 14	8-6	G1/4"	6	28	14	17	-
021039	C 12 08 38	8-6	G3/8"	9	29	14	20	-
021047	C 12 10 18	10-8	G1/8"	6	29	16	14	-
021040	C 12 10 14	10-8	G1/4"	8	30	16	17	-
021041	C 12 10 38	10-8	G3/8"	9	31	16	20	-
021042	C 12 10 12	10-8	G1/2"	10	33	16	24	-
021043	C 12 12 38	12-10	G3/8"	9	32,5	19	20	-
021044	C 12 12 12	12-10	G1/2"	10	34,5	19	24	-
021045	C 12 15 12	15-12,5	G1/2"	10	36,5	22	24	-

Main features

Type	Description
C14	Union. In nickel-plated brass.



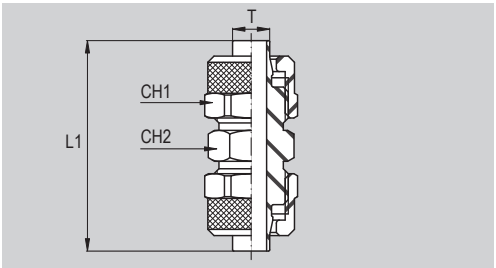

Dimensions

Code	Item	T (ØTube)	L1	CH1	CH2	Weight (g)
021092	C 14 05 05	5-3	33	12	11	-
021093	C 14 06 06	6-4	33	12	11	-
021094	C 14 08 08	8-6	35	14	12	-
021095	C 14 10 10	10-8	39	16	14	-
021096	C 14 12 12	12-10	42	19	16	-
021097	C 14 15 15	15-12,5	47	22	22	-

Main features

Type	Description
C13	Female BSP stud. In nickel-plated brass.



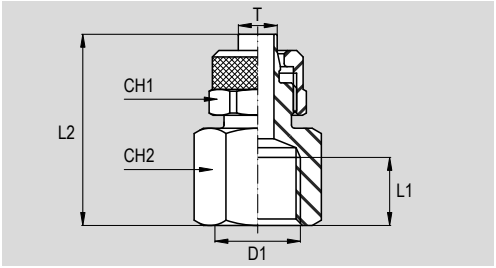

Dimensions

Code	Item	T (ØTube)	D1	L1	L2	CH1	CH2	Weight (g)
021062	C 13 05 18	5-3	G1/8"	7,5	26	12	14	-
021063	C 13 06 18	6-4	G1/8"	7,5	26	12	14	-
021064	C 13 06 14	6-4	G1/4"	11	28,5	12	17	-
021065	C 13 08 18	8-6	G1/8"	7,5	27	14	14	-
021066	C 13 08 14	8-6	G1/4"	11	29,5	14	17	-
021067	C 13 08 38	8-6	G3/8	11,5	30,5	14	20	-
021071	C 13 10 18	10-8	G1/8"	7,5	29,5	16	14	-
021068	C 13 10 14	10-8	G1/4"	11	31,5	16	17	-
021069	C 13 10 38	10-8	G3/8"	11,5	32,5	16	20	-
021070	C 13 12 38	12-10	G3/8"	11,5	34	19	20	-

Main features

Type	Description
C15	Bulkhead. In nickel-plated brass.



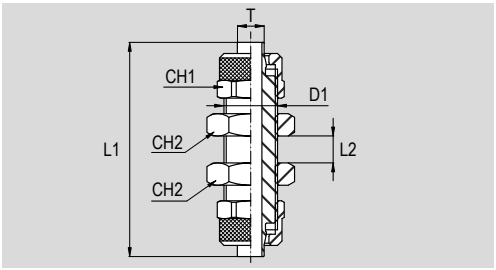

Dimensions

Code	Item	T (ØTube)	D1	L1	L2 max	CH1	CH2	Weight (g)
021112	C 15 05 05	5-3	10x1	45	8	12	14	-
021113	C 15 06 06	6-4	10x1	45	8	12	14	-
021114	C 15 08 08	8-6	12x1	48	8	14	17	-
021115	C 15 10 10	10-8	14x1	50	7	16	17	-
021116	C 15 12 12	12-10	16x1	55	7	19	20	-
021117	C 15 15 15	15-12,5	20x1	58	5	22	24	-

Main features

Type	Description
C16	BSPT elbow. In nickel-plated brass.



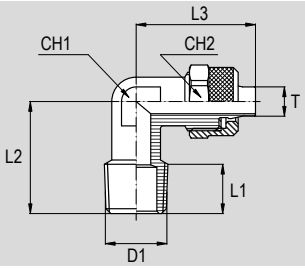

Dimensions

Code	Item	T (ØTube)	D1	L1	L2	L3	CH1	CH2	Weight (g)
021146	C 16 04 M5	4-2,5	M5x0,8	5	15,5	20	9	7	-
021131	C 16 04 18	4-2,5	R1/8”	7,5	17,5	20	9	7	-
021133	C 16 05 18	5-3	R1/8”	7,5	17,5	22	9	12	-
021148	C 16 06 12x1,25	6-4	M12x1,25	13	21	22	9	12	-
021149	C 16 06 12x1,5	6-4	M12x1,5	13	21	22	9	12	-
021134	C 16 06 18	6-4	R1/8”	7,5	17,5	22	9	12	-
021135	C 16 06 14	6-4	R1/4”	11	21	22	9	12	-
021136	C 16 06 38	6-4	R3/8”	11,5	24,5	24	12	12	-
021137	C 16 08 18	8-6	R1/8”	7,5	20,5	24,5	12	14	-
021138	C 16 08 14	8-6	R1/4”	11	24	24,5	12	14	-
021139	C 16 08 38	8-6	R3/8”	11,5	24,5	24,5	12	14	-
021140	C 16 10 18	10-8	R1/8”	7,5	21	27	12	16	-
021141	C 16 10 14	10-8	R1/4”	11	24	27	12	16	-
021142	C 16 10 38	10-8	R3/8”	11,5	24,5	27	12	16	-
021143	C 16 12 38	12-10	R3/8”	11,5	26,5	30,5	14	19	-
021144	C 16 12 12	12-10	R1/2”	14	30	34	17	19	-
021145	C 16 15 12	15-12,5	R1/2”	14	30	35	17	22	-

Main features

Type	Description
C17	Female BSP elbow. In nickel-plated brass.



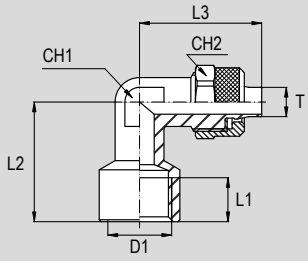

Dimensions

Code	Item	T (ØTube)	D1	L1	L2	L3	CH1	CH2	Weight (g)
021161	C 17 05 18	5-3	G1/8”	7,5	21	22	9	12	-
021162	C 17 06 18	6-4	G1/8”	7,5	21	22	9	12	-
021163	C 17 06 14	6-4	G1/4”	11	24,5	24	14	12	-
021164	C 17 08 18	8-6	G1/8”	7,5	24	24,5	12	14	-
021165	C 17 08 14	8-6	G1/4”	11	24,5	25	12	14	-
021166	C 17 10 14	10-8	G1/4”	11	24,5	27	12	16	-
021167	C 17 12 38	12-10	G3/8”	11,5	30	34	17	19	-

Main features

Type	Description
C18	Equal elbow. In nickel-plated brass.



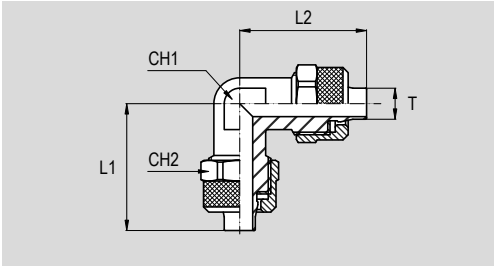

Dimensions

Code	Item	T (ØTube)	L1	L2	CH1	CH2	Weight (g)
021182	C 18 05 05	5-3	22	22	9	12	-
021183	C 18 06 06	6-4	22	22	9	12	-
021184	C 18 08 08	8-6	24,5	24,5	12	14	-
021185	C 18 10 10	10-8	27	27	12	16	-
021186	C 18 12 12	12-10	30,5	30,5	14	19	-
021187	C 18 15 15	15-12,5	35	35	17	22	-

Main features

Type	Description
C40	BSP swivel elbow. In nickel-plated brass.



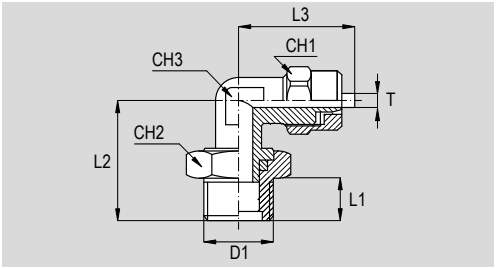

Dimensions

Code	Item	T (ØTube)	D1	L1	L2	L3	CH1	CH2	CH3	Weight (g)
021176	C 40 06 M5	6-4	M5x0,8	5	22	22,5	12	8	8	-
021171	C 40 06 18	6-4	G1/8”	6	22,5	22,5	12	14	8	-
021172	C 40 06 14	6-4	G1/4”	8	25	23,5	12	17	10	-
021173	C 40 08 18	8-6	G1/8”	6	22,5	23,5	14	14	10	-
021174	C 40 08 14	8-6	G1/4”	8	25	23,5	14	17	10	-
021175	C 40 10 14	10-8	G1/4”	8	25,5	25,5	16	17	11	-

Main features

Type	Description
C30	Single banjo elbow with hexagonal wrench. In nickel-plated brass.



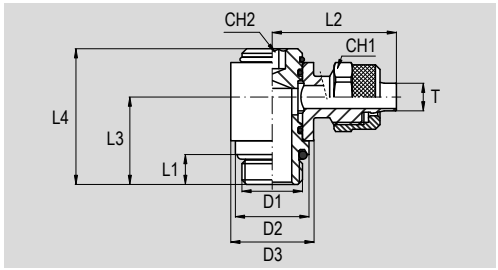

Dimensions

Code	Item	T (ØTube)	D1	D2	D3	L1	L2	L3	L4	CH1	CH2	Weight (g)
021441	C 30 06 18	6-4	G1/8"	13	14	5	25	16,5	25,5	12	4	28,2
021442	C 30 06 14	6-4	G1/4"	16	18	6,5	26,5	18,5	29	12	5	41,9
021443	C 30 08 18	8-6	G1/8"	13	14	5	25	16,5	25,5	14	4	28,7
021444	C 30 08 14	8-6	G1/4"	16	18	6,5	27,5	18,5	29	14	5	44,1
021445	C 30 10 14	10-8	G1/4"	16	18	6,5	28,5	18,5	29	16	5	46,7
021446	C 30 10 38	10-8	G3/8"	20	22	7	30,5	22	32,5	16	6	68,7

Main features

Type	Description
C34	Single banjo elbow. In nickel-plated brass.



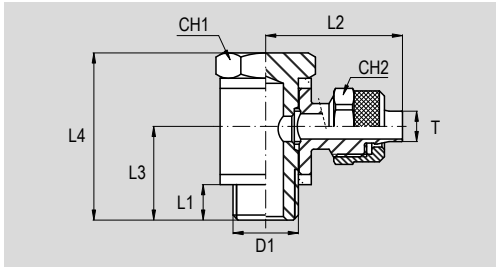

Dimensions

Code	Item	T (ØTube)	D1	L1	L2	L3	L4	CH1	CH2	Weight (g)
021501	C 34 04 M5	4-2,5	M5x0,8	4,1	19	9,8	18,5	8	7	10,4
021502	C 34 04 18	4-2,5	G1/8”	4,4	21,5	15,2	27	14	7	27,5
021503	C 34 05 M5	5-3	M5x0,8	4,1	20	9,8	18,5	8	8	10
021504	C 34 05 18	5-3	G1/8”	4,4	23	15,2	27	14	8	27
021505	C 34 06 M5	6-4	M5x0,8	4,1	20	9,8	18,5	8	9	10,8
021506	C 34 06 18	6-4	G1/8”	4,4	25	15,2	27	14	12	32,5
021507	C 34 06 14	6-4	G1/4”	5,9	26,5	17,2	31,5	17	12	52,4
021508	C 34 08 18	8-6	G1/8”	4,4	25	15,2	27	14	14	33,6
021509	C 34 08 14	8-6	G1/4”	5,9	27,5	17,2	31,5	17	14	54,6
021510	C 34 08 38	8-6	G3/8”	6,4	29,5	20,7	36	20	14	83,4
021511	C 34 10 14	10-8	G1/4”	5,9	28,5	17,2	31,5	17	16	56,7
021512	C 34 10 38	10-8	G3/8”	6,4	30,5	20,7	36	20	16	86,2

Main features

Type	Description
C20	BSPT tee. In nickel-plated brass.



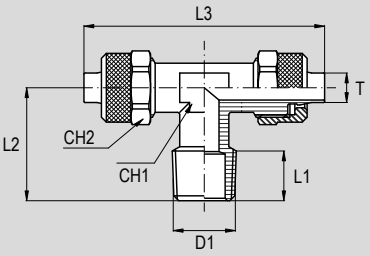

Dimensions

Code	Item	T (ØTube)	D1	L1	L2	L3	CH1	CH2	Weight (g)
021222	C 20 05 18	5-3	R1/8”	7,5	17,5	44	9	12	-
021223	C 20 06 18	6-4	R1/8”	7,5	17,5	44	9	12	-
021224	C 20 06 14	6-4	R1/4”	11	21	44	9	12	-
021225	C 20 08 18	8-6	R1/8”	7,5	20,5	49	12	14	-
021226	C 20 08 14	8-6	R1/4”	11	24	49	12	14	-
021227	C 20 10 14	10-8	R1/4”	11	24	54	12	16	-
021228	C 20 10 38	10-8	R3/8”	11,5	24,5	54	12	16	-
021229	C 20 12 38	12-10	R3/8”	11,5	26,5	61	14	19	-
021230	C 20 12 12	12-10	R1/2”	14	30	68	17	19	-
021231	C 20 15 12	15-12,5	R1/2”	14	30	70	17	22	-

Main features

Type	Description
C31	BSP swivel tee with hexagonal wrench. In nickel-plated brass.



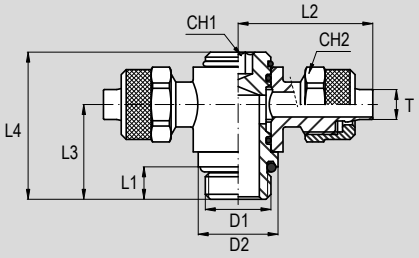

Dimensions

Code	Item	T (ØTube)	D1	D2	L1	L2	L3	L4	CH1	CH2	Weight (g)
021461	C 31 06 18	6-4	G1/8”	13	5	25	16,5	25,5	4	12	39,2
021462	C 31 06 14	6-4	G1/4”	16	6,5	26,5	18,5	25	5	12	52,9
021463	C 31 08 18	8-6	G1/8”	14	5	25	16,5	25,5	4	14	41,2
021464	C 31 08 14	8-6	G1/4”	16	6,5	27,5	18,5	29	5	14	56
021465	C 31 10 14	10-8	G1/4”	16	6,5	28,5	18,5	29	5	16	64

Main features

Type	Description
C36	Single banjo tee. In nickel-plated brass.



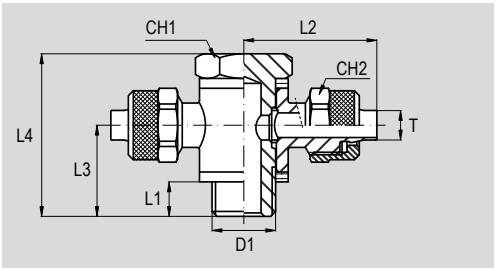

Dimensions

Code	Item	T (ØTube)	D1	L1	L2	L3	L4	CH1	CH2	Weight (g)
021546	C 36 05 M5	5-3	M5x0,8	4,1	20	9,8	18,5	8	8	14,3
021547	C 36 05 18	5-3	G1/8"	4,4	23	15,2	27	14	8	44,5
021548	C 36 06 M5	6-4	M5x0,8	4,1	20	9,8	18,5	8	9	15,3
021549	C 36 06 18	6-4	G1/8"	4,4	25	15,2	27	14	12	44,1
021550	C 36 06 14	6-4	G1/4"	5,9	26,5	17,2	31,5	17	12	63,2
021551	C 36 08 18	8-6	G1/8"	4,4	25	15,2	27	14	14	46,3
021552	C 36 08 14	8-6	G1/4"	5,9	27,5	17,2	31,5	17	14	66,5
021554	C 36 10 14	10-8	G1/4"	5,9	28,5	17,2	31,5	17	16	72,4

Main features

Type	Description
C19	Equal tee. In nickel-plated brass.



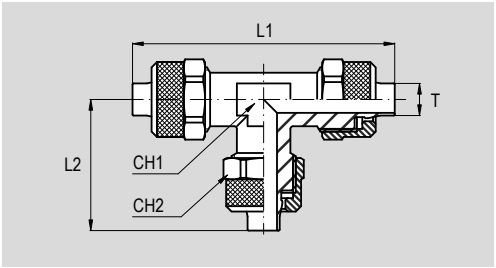

Dimensions

Code	Item	T (ØTube)	L1	L2	CH1	CH2	Weight (g)
021202	C 19 05 05	5-3	44	22	9	12	-
021203	C 19 06 06	6-4	44	22	9	12	-
021204	C 19 08 08	8-6	49	24,5	12	14	-
021205	C 19 10 10	10-8	54	27	12	16	-
021206	C 19 12 12	12-10	61	30,5	14	19	-
021207	C 19 15 15	15-12,5	70	35	17	22	-

Main features

Type	Description
C21	BSPT side tee. In nickel-plated brass.



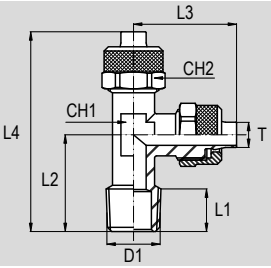

Dimensions

Code	Item	T (ØTube)	D1	L1	L2	L3	L4	CH1	CH2	Weight (g)
021252	C 21 05 18	5-3	R1/8”	7,5	17,5	22	39,5	9	12	-
021253	C 21 06 18	6-4	R1/8”	7,5	17,5	22	39,5	9	12	-
021254	C 21 06 14	6-4	R1/4”	11	21	22	43	9	12	-
021255	C 21 08 18	8-6	R1/8”	7,5	20,5	24,5	43	12	14	-
021256	C 21 08 14	8-6	R1/4”	11	24	24,5	48,5	12	14	-
021257	C 21 10 14	10-8	R1/4”	11	24	27	51	12	16	-
021258	C 21 10 38	10-8	R3/8”	11,5	24,5	27	51,5	12	16	-
021259	C 21 12 38	12-10	R3/8”	11,5	26,5	30,5	57	14	16	-
021260	C 21 12 12	12-10	R1/2”	14	30	34	64	17	19	-
021261	C 21 15 12	15-12,5	R1/2”	14	30	35	65	17	22	-

Main features

Type	Description
C22	Equal +. In nickel-plated brass.



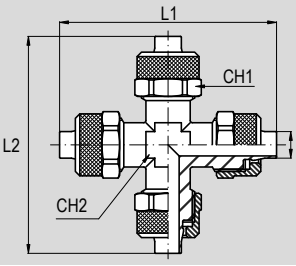

Dimensions

Code	Item	T (ØTube)	L1	L2	CH1	CH2	Weight (g)
021281	C 22 05 05	5-3	44	44	12	10	-
021282	C 22 06 06	6-4	44	44	12	10	-
021283	C 22 08 08	8-6	49	49	14	10	-
021284	C 22 10 10	10-8	54	54	16	12	-
021285	C 22 12 12	12-10	61	61	19	14	-
021286	C 22 15 15	15-12,5	70	70	22	17	-

Main features

Type	Description
C23	Single banjo. In nickel-plated brass. Compatible with bolt types R31, R32, R59 and R60. Compatible with flow regulators types V14 and V15 ((for size M5 with coding M5R only). Compatible with accessories with integrated function types V45, V46 and V47.



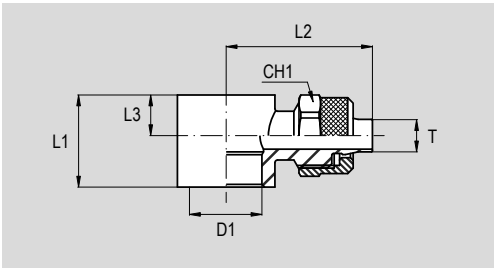

Dimensions

Code	Item	T (ØTube)	D1		L1	L2	L3	CH1	Weight (g)
021317	C 23 04 M5	4-2,5	5,1	M5	9	19	4,5	7	7,6
021319	C 23 04 M5R	4-2,5	7	-	10	19	3,5	7	5,5
021318	C 23 04 18	4-2,5	10	1/8"	15	21.5	6	7	12,7
021301	C 23 05 M5	5-3	5,1	M5	9	20	4,5	8	7,3
021302	C 23 05 M5R	5-3	7	-	10	20	3,5	8	6,5
021303	C 23 05 18	5-3	10	1/8"	15	23	6	8	20,5
021304	C 23 06 M5	6-4	5,1	M5	9	20	4,5	9	7,9
021305	C 23 06 M5R	6-4	7	-	10	20	3,5	9	6,8
021306	C 23 06 18	6-4	10	1/8"	15	25	6	12	19,2
021307	C 23 06 14	6-4	13,2	1/4"	17	26,5	7,5	12	25,6
021308	C 23 08 18	8-6	10	1/8"	15	25	6	14	19,5
021309	C 23 08 14	8-6	13,2	1/4"	17	27,5	7,5	14	27,4
021310	C 23 08 38	8-6	17	3/8"	20	29,5	7,5	14	39
021311	C 23 10 14	10-8	13,2	1/4"	17	28,5	7,5	16	29,2
021312	C 23 10 38	10-8	17	3/8"	20	30,5	7,5	16	41,5

Main features

Type	Description
C24	Double banjo. In nickel-plated brass. Compatible with bolt types R31, R32, R59 and R60. Compatible with flow regulators types V14 and V15. Compatible with accessories with integrated function types V45, V46 and V47.



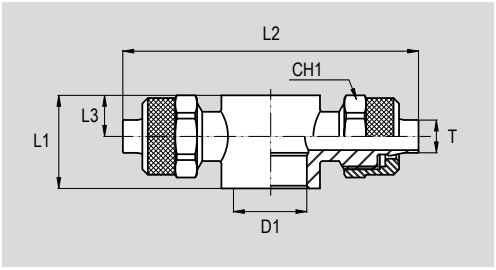

Dimensions

Code	Item	T (ØTube)	D1		L1	L2	L3	CH1	Weight (g)
021331	C 24 05 M5	5-3	5,1	M5	9	40	4,5	8	12
021332	C 24 05 18	5-3	10	1/8"	15	50	6	12	30,6
021333	C 24 06 M5	6-4	5,1	M5	9	40	4,5	9	12,7
021334	C 24 06 18	6-4	10	1/8"	15	50	6	12	30,1
021335	C 24 06 14	6-4	13,2	1/4"	17	53	7,5	12	35,5
021336	C 24 08 18	8-6	10	1/8"	15	50	6	14	31,9
021337	C 24 08 14	8-6	13,2	1/4"	17	55	7,5	14	38,9
021339	C 24 10 14	10-8	13,2	1/4"	17	57	7,5	16	44,5

Main features

Type	Description
C37	Reduced single banjo. In nickel-plated brass. Compatible with hollow bolt types C25 and C26.



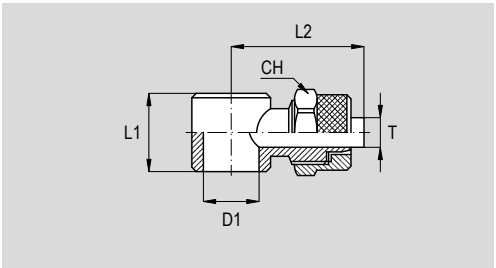

Dimensions

Code	Item	T (ØTube)	D1	L1	L2	CH	Weight (g)
021321	C 37 05 M5	5-3	5,1	9	17	8	-
021322	C 37 05 18	5-3	9,8	14,5	22,5	8	-
021323	C 37 06 M5	6-4	5,1	9	18	9	-
021324	C 37 06 18	6-4	9,8	14,5	24	12	-
021325	C 37 06 14	6-4	13,2	14,5	26	12	-
021326	C 37 08 18	8-6	9,8	14,5	24	14	-
021327	C 37 08 14	8-6	13,2	14,5	26	14	-
021328	C 37 10 14	10-8	13,2	14,5	27,5	16	-

Main features

Type	Description
C38	Reduced double banjo. In nickel-plated brass. Compatible with hollow bolt types C25 and C26.



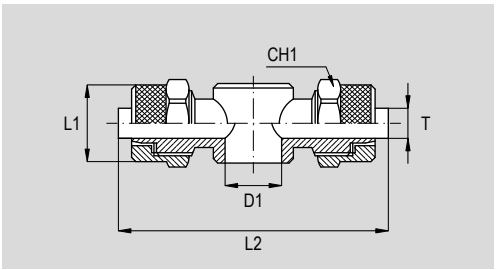

Dimensions

Code	Item	T (ØTube)	D1	L1	L2	CH1	Weight (g)
021351	C 38 05 18	5-3	9,8	14,5	45	8	-
021352	C 38 06 18	6-4	9,8	14,5	48	12	-
021353	C 38 06 14	6-4	13,2	14,5	52	12	-
021354	C 38 08 18	8-6	9,8	14,5	48	14	-
021355	C 38 08 14	8-6	13,2	14,5	53	14	-
021356	C 38 10 14	10-8	13,2	14,5	55	16	-

Main features

Type	Description
C25	Reduced hollow bolt. In nickel-plated brass. Compatible with reduced banjo types C37 and C38.



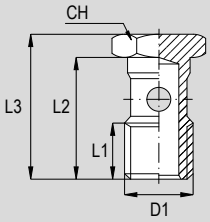

Dimensions

Code	Item	D1	L1	L2	L3	CH	Weight (g)
020681	C 25 00 M5	M5x0,8	4	14,5	18	8	-
020682	C 25 00 18	1/8”	8	23	27	14	-
020683	C 25 00 14	1/4”	11	25	29,5	17	-

Main features

Type	Description
C26	Reduced double hollow bolt. In nickel-plated brass. Compatible with reduced banjo types C37 and C38.



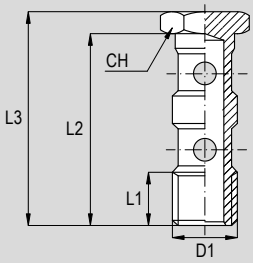

Dimensions

Code	Item	D1	L1	L2	L3	CH	Weight (g)
020696	C 26 00 18	1/8”	8	39	43	14	-
020697	C 26 00 14	1/4”	11	41	45,5	17	-

Main features

Type	Description
C27	Nut. In nickel-plated brass.



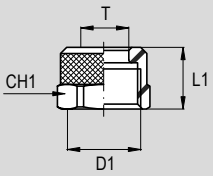

Dimensions

Code	Item	T (ØTube)	D1	L1	CH1	Weight (g)
021409	C 27 04 07	4,10	M6x0,75	8	7	-
021401	C 27 05 08	5,10	M7x0,75	9	8	-
021402	C 27 06 08	6,10	M8x0,75	9	9	-
021404	C 27 06 10	6,10	M10x1	10	12	-
021405	C 27 08 12	8,15	M12x1	10	14	-
021406	C 27 10 14	10,25	M14x1	11	16	-
021407	C 27 12 16	12,30	M16x1	12	19	-
021408	C 27 15 20	15,30	M20x1	13	22	-

Main features

Type	Description
C32	Nut with spring. In nickel-plated brass.



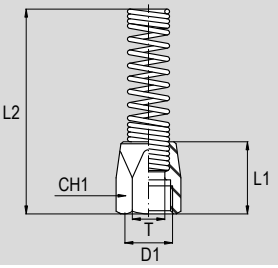

Dimensions

Code	Item	T (ØTube)	D1	L1	L2	CH1	Weight (g)
021481	C 32 06 04	6-4	M10x1	17	87	12	-
021482	C 32 08 06	8-6	M12x1	18	98	14	-
021483	C 32 10 08	10-8	M14x1	21	110	16	-

COMPRESSION
fittings



Find out our
key products

- **Solution for most applications**
- **Easy and intuitive choice**
- **Excellent value for money**
- **Wide availability**
- **Fast delivery**

Main features and certifications

Compression fittings in nickel-plated brass. Available in many versions, threads and tube diameters.
Supplied as standard in compliance to Reach and RoHS directives.

ISO 8434 DIN 2353 RoHS REACH compliant

Series O

from page 4.25.10



Series of compression fittings for brass tubes. The ogive crushing onto the tube, by screwing down the external nut, allows to get a safe connection even at high pressures. The ogive is single cone.
The fitting seats, the ogives and the nuts are conforming to DIN 3870-3861 standards. The series of compression fittings is also suitable for connecting "soft" tubes (Rilsan, Polyurethane, Nylon etc.), by applying a tube insert inside the tube. Available in different configurations, with taper BSPT threads and BSP threads, in various sizes.







Code key

Series	Type*	Ø Tube*	Thread (or Ø Tube 2)*
O	**11**	**06**	**18**
O	11, 12, 13, 14, 15, 16, 17, 18, 19, 20, 21, 22, 23, 25, 26, 27	04 = Ø 4 mm 06 = Ø 6 mm 08 = Ø 8 mm 10 = Ø 10 mm 12 = Ø 12 mm 15 = Ø 15 mm	M5 = M5x0,8 18 = 1/8" 14 = 1/4" 38 = 3/8" 12 = 1/2"

How to order

Series	Type	Ø Tube	Thread
O	**11**	**06**	**18**

Notes

For standard materials see the table below.

* For matching between fitting type, tube diameter and thread, see page 4.25.11; for the specific type, see the following pages.

Technical data

Version	Series O
Fluid	Compressed air
Maximum pressure	According to the used tube. Maximum 60 bar.
Temperature range	According to the used tube.
Parallel threads	UNI - ISO 228 / 1 (BSP)
Taper threads	UNI EN 10226-1 (BSPT)
Metric threads	UNI EN ISO 965-1
Tubes	Metal Calibrated Nylon (PA6), PU and Rilsan (PA11) (with tube insert)

Standard materials

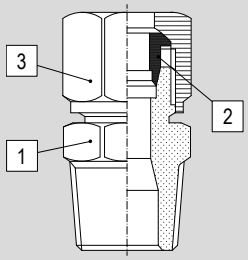

Position	Description	Material
1	Body	Nickel-plated brass
2	Ogive	Brass
3	Nut	Nickel-plated brass

Fittings series O

Type			Taper threads (BSPT)	Parallel threads (BSP)	Metric threads	For tube Ø mm	Stem Ø mm	Data sheet and code page
O11	BSPT stud		1/8", 1/4", 3/8", 1/2"	-	-	4, 5, 6, 8, 10, 12, 15	-	4.25.12
O12	BSP stud		-	1/8", 1/4", 3/8", 1/2"	M5x0,8	4, 5, 6, 8, 10, 12, 15	-	4.25.12
O13	Female BSP stud		-	1/8", 1/4", 3/8"	-	4, 5, 6, 8, 10	-	4.25.13
O14	Union		-	-	-	4, 5, 6, 8, 10, 12, 15	-	4.25.13
O15	Bulkhead		-	-	-	4, 5, 6, 8, 10, 12, 15	-	4.25.14
O26	Reducer		-	-	-	6, 8	8, 10, 12	4.25.14
O16	BSPT elbow		1/8", 1/4", 3/8", 1/2"	-	-	4, 5, 6, 8, 10, 12, 15	-	4.25.15
O17	Equal elbow		-	-	-	4, 5, 6, 8, 10, 12, 15	-	4.25.15
O27	Female BSP elbow		-	1/8", 1/4"	-	4, 6, 8	-	4.25.16
O18	Equal tee		-	-	-	4, 5, 6, 8, 10, 12, 15	-	4.25.16
O19	BSPT tee		1/8", 1/4", 3/8", 1/2"	-	-	4, 5, 6, 8, 10, 12, 15	-	4.25.17
O20	BSPT side tee		1/8", 1/4", 3/8", 1/2"	-	-	4, 5, 6, 8, 10, 12, 15	-	4.25.17
O25	Single banjo		-	-	-	6, 8	-	4.25.18
O21	Nut		-	-	-	4, 5, 6, 8, 10, 12, 15	-	4.25.18
O22	Ogive		-	-	-	4, 5, 6, 8, 10, 12, 15	-	4.25.19
O23	Tube insert		-	-	-	4, 6, 8, 10, 12, 15	-	4.25.19

Thread/Tube matching

External Tube Ø	Thread								
	M5x0,8	G1/8"	G1/4"	G3/8"	G1/2"	R1/8"	R1/4"	R3/8"	R1/2"
Ø 4 mm	●	●	-	-	-	●	-	-	-
Ø 6 mm	-	●	●	-	-	●	●	-	-
Ø 8 mm	-	●	●	-	-	●	●	●	-
Ø 10 mm	-	-	●	●	-	-	●	●	-
Ø 12 mm	-	-	-	●	●	-	-	●	●
Ø 15 mm	-	-	-	-	●	-	-	-	●

Key
● available matching; - not available matching

Main features

Type	Description
O11	BSPT stud. In nickel-plated brass.



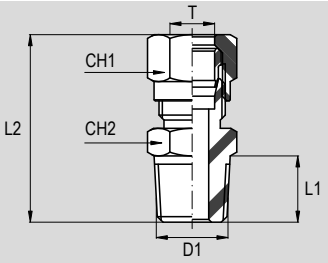

Dimensions

Code	Item	T (ØTube)	D1	L1	L2	CH1	CH2	Weight (g)
021701	O 11 04 18	4	R1/8”	8	27	10	10	-
021703	O 11 06 18	6	R1/8”	8	28	12	12	-
021704	O 11 06 14	6	R1/4”	11	33	12	14	-
021705	O 11 08 18	8	R1/8”	8	30	14	12	-
021706	O 11 08 14	8	R1/4”	11	33	14	14	-
021712	O 11 08 38	8	R3/8”	12	33	14	17	-
021707	O 11 10 14	10	R1/4”	11	37,5	19	17	-
021708	O 11 10 38	10	R3/8”	11,5	38	19	17	-
021709	O 11 12 38	12	R3/8”	11,5	39	22	19	-
021710	O 11 12 12	12	R1/2”	14	41	22	22	-
021711	O 11 15 12	15	R1/2”	14	44,5	27	22	-

Main features

Type	Description
O12	BSP stud. In nickel-plated brass. For sealing washers see from page 4.65.1



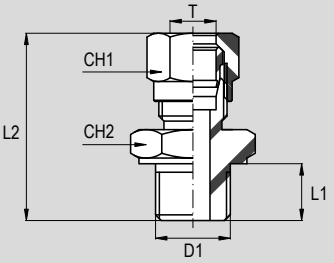

Dimensions

Code	Item	T (ØTube)	D1	L1	L2	CH1	CH2	Weight (g)
021742	O 12 04 M5	4	M5x0,8	5	26	10	9	-
021731	O 12 04 18	4	G1/8”	6	25	10	14	-
021733	O 12 06 18	6	G1/8”	6	26	12	14	-
021734	O 12 06 14	6	G1/4”	8	29,5	12	17	-
021735	O 12 08 18	8	G1/8”	6	26,5	14	14	-
021736	O 12 08 14	8	G1/4”	8	30	14	17	-
021737	O 12 10 14	10	G1/4”	8	34,5	19	17	-
021738	O 12 10 38	10	G3/8”	9	36	19	19	-
021739	O 12 12 38	12	G3/8”	10	39	22	22	-
021740	O 12 12 12	12	G1/2”	12	42	22	27	-
021741	O 12 15 12	15	G1/2”	12	43	27	27	-

Main features

Type	Description
O13	Female BSP stud. In nickel-plated brass.



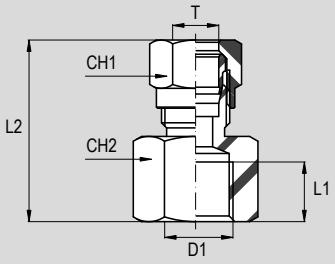

Dimensions

Code	Item	T (ØTube)	D1	L1	L2	CH1	CH2	Weight (g)
021761	O 13 04 18	4	G1/8"	10	29	10	14	-
021763	O 13 06 18	6	G1/8"	10	29	12	14	-
021764	O 13 06 14	6	G1/4"	12	31	12	19	-
021765	O 13 08 18	8	G1/8"	10	30	14	14	-
021766	O 13 08 14	8	G1/4"	12	32	14	19	-
021767	O 13 10 14	10	G1/4"	12	36	19	19	-
021768	O 13 10 38	10	G3/8"	12	38	19	22	-

Main features

Type	Description
O14	Union. In nickel-plated brass.



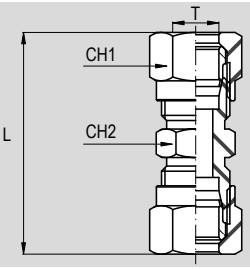

Dimensions

Code	Item	T (ØTube)	L	CH1	CH2	Weight (g)
021791	O 14 04 04	4	36	10	9	-
021793	O 14 06 06	6	36	12	11	-
021794	O 14 08 08	8	38	14	12	-
021795	O 14 10 10	10	48	19	17	-
021796	O 14 12 12	12	50	22	19	-
021797	O 14 15 15	15	53	27	24	-

Main features

Type	Description
O15	Bulkhead. In nickel-plated brass.



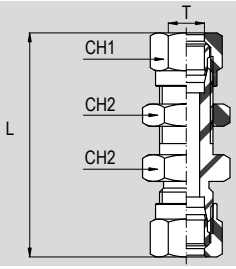

Dimensions

Code	Item	T (ØTube)	L	CH1	CH2	Weight (g)
021811	O 15 04 04	4	57	10	12	-
021813	O 15 06 06	6	60	12	14	-
021814	O 15 08 08	8	62	14	17	-
021815	O 15 10 10	10	72	19	19	-
021816	O 15 12 12	12	75	22	22	-
021817	O 15 15 15	15	79	27	27	-

Main features

Type	Description
O26	Reducer. In nickel-plated brass.



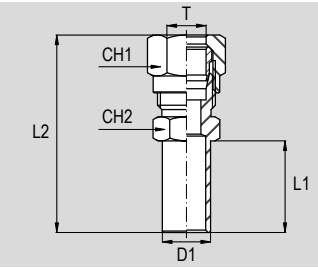

Dimensions

Code	Item	T (ØTube)	D1	L1	L2	CH1	CH2	Weight (g)
022061	O 26 06 08	6	8	18	38	12	12	-
022062	O 26 06 10	6	10	19	39	12	12	-
022063	O 26 08 10	8	10	19	41	14	12	-
022064	O 26 08 12	8	12	19	41	14	14	-

Main features

Type	Description
O16	BSPT elbow. In nickel-plated brass.



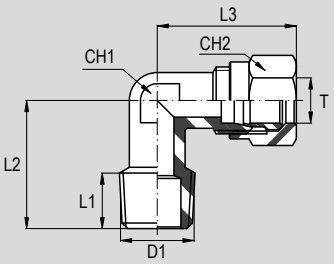

Dimensions

Code	Item	T (ØTube)	D1	L1	L2	L3	CH1	CH2	Weight (g)
021831	O 16 04 18	4	R1/8”	8	17	22	7	10	-
021833	O 16 06 18	6	R1/8”	8	17	23	9	12	-
021834	O 16 06 14	6	R1/4”	12	21	23	9	12	-
021835	O 16 08 18	8	R1/8”	8	20	25	12	14	-
021836	O 16 08 14	8	R1/4”	12	23	25	12	14	-
021837	O 16 10 14	10	R1/4”	12	25	33	14	19	-
021838	O 16 10 38	10	R3/8”	12	27	33	14	19	-
021839	O 16 12 38	12	R3/8”	12	28	35	17	22	-
021840	O 16 12 12	12	R1/2”	14	30	35	17	22	-
021841	O 16 15 12	15	R1/2”	14	31	39	19	27	-

Main features

Type	Description
O17	Equal elbow. In nickel-plated brass.



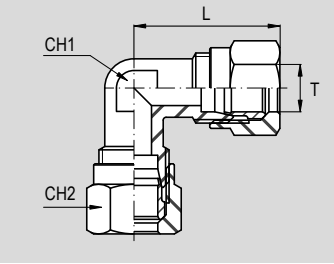

Dimensions

Code	Item	T (ØTube)	L	CH1	CH2	Weight (g)
021861	O 17 04 04	4	22	7	10	-
021863	O 17 06 06	6	23	9	12	-
021864	O 17 08 08	8	25	12	14	-
021865	O 17 10 10	10	33	14	19	-
021866	O 17 12 12	12	35	17	22	-
021867	O 17 15 15	15	39	19	27	-

Main features

Type	Description
O27	Female BSP elbow. In nickel-plated brass.



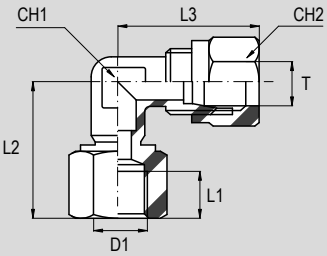

Dimensions

Code	Item	T (ØTube)	D1	L1	L2	L3	CH1	CH2	Weight (g)
022071	O 27 04 18	4	G1/8"	8	20	22	9	10	-
022072	O 27 06 18	6	G1/8"	8	20	24,5	9	12	-
022073	O 27 06 14	6	G1/4"	11	25,5	27	13	12	-
022074	O 27 08 18	8	G1/8"	8	20	24	11	14	-
022075	O 27 08 14	8	G1/4"	11	25,5	27,5	13	14	-

Main features

Type	Description
O18	Equal tee. In nickel-plated brass.



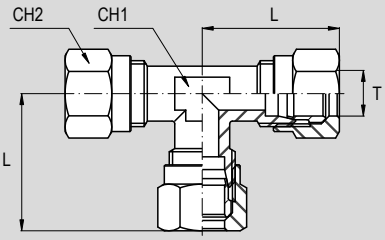

Dimensions

Code	Item	T (ØTube)	L	CH1	CH2	Weight (g)
021881	O 18 04 04	4	22	7	10	-
021883	O 18 06 06	6	23	9	12	-
021884	O 18 08 08	8	25	12	14	-
021885	O 18 10 10	10	33	14	19	-
021886	O 18 12 12	12	35	17	22	-
021887	O 18 15 15	15	39	19	27	-

Main features

Type	Description
O19	BSPT tee. In nickel-plated brass.



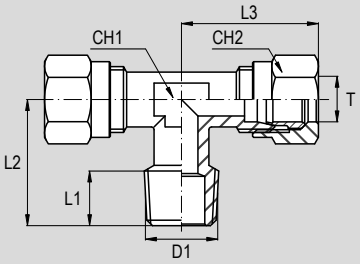

Dimensions

Code	Item	T (ØTube)	D1	L1	L2	L3	CH1	CH2	Weight (g)
021911	O 19 04 18	4	R1/8"	8	17	22	7	10	-
021913	O 19 06 18	6	R1/8"	8	17	23	9	12	-
021914	O 19 06 14	6	R1/4"	12	21	23	9	12	-
021915	O 19 08 18	8	R1/8"	8	20	25	12	14	-
021916	O 19 08 14	8	R1/4"	12	23	25	12	14	-
021917	O 19 10 14	10	R1/4"	12	25	33	14	19	-
021918	O 19 10 38	10	R3/8"	12	27	33	14	19	-
021919	O 19 12 38	12	R3/8"	12	28	35	17	22	-
021920	O 19 12 12	12	R1/2"	14	30	35	17	22	-
021921	O 19 15 12	15	R1/2"	14	31	39	19	27	-

Main features

Type	Description
O20	BSPT side tee. In nickel-plated brass.



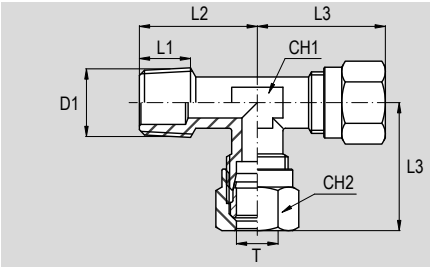

Dimensions

Code	Item	T (ØTube)	D1	L1	L2	L3	CH1	CH2	Weight (g)
021941	O 20 04 18	4	R1/8"	8	17	22	7	10	-
021943	O 20 06 18	6	R1/8"	8	17	23	9	12	-
021944	O 20 06 14	6	R1/4"	12	21	23	9	12	-
021945	O 20 08 18	8	R1/8"	8	20	25	12	14	-
021946	O 20 08 14	8	R1/4"	12	23	25	12	14	-
021947	O 20 10 14	10	R1/4"	12	25	33	14	19	-
021948	O 20 10 38	10	R3/8"	12	27	33	14	19	-
021949	O 20 12 38	12	R3/8"	12	28	35	17	22	-
021950	O 20 12 12	12	R1/2"	14	30	35	17	22	-
021951	O 20 15 12	15	R1/2"	14	31	39	19	27	-

Main features

Type	Description
O25	Single banjo. In nickel-plated brass. Compatible with bolt types R31, R32, R59 and R60. Compatible with flow regulators types V14 and V15. Compatible with accessories with integrated function types V45, V46 and V47.



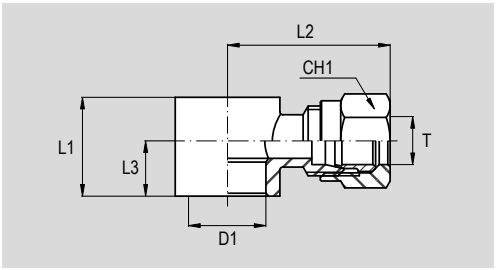

Dimensions

Code	Item	T (ØTube)	D1	L1	L2	L3	CH1	Weight (g)
022056	O 25 06 18	6	10	15	26	9	12	19
022057	O 25 06 14	6	13,2	17	28	9,5	12	26
022058	O 25 08 18	8	10	15	27	8,5	14	21
022059	O 25 08 14	8	13,2	17	29	9,5	14	28

Main features

Type	Description
O21	Nut. In nickel-plated brass.



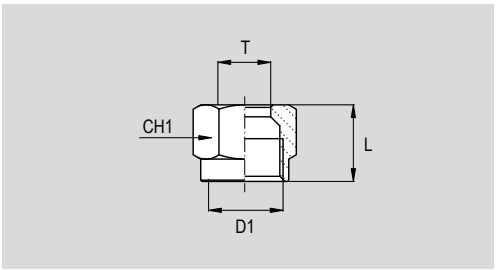

Dimensions

Code	Item	T (ØTube)	D1	L	CH1	Weight (g)
021971	O 21 04 08	4	8x1	11	10	-
021973	O 21 06 10	6	10x1	11,5	12	-
021974	O 21 08 12	8	12x1	12	14	-
021975	O 21 10 16	10	16x1,5	15,5	19	-
021976	O 21 12 18	12	18x1,5	15,5	22	-
021977	O 21 15 22	15	22x1,5	17	27	-

Main features

Type	Description
O22	Ogive. In brass.



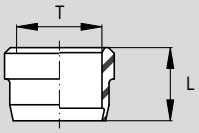

Dimensions

Code	Item	T (ØTube)	L	Weight (g)
021991	O 22 04 65	4	6,5	-
021993	O 22 06 75	6	7,5	-
021994	O 22 08 75	8	7,5	-
021995	O 22 10 95	10	9,5	-
021996	O 22 12 95	12	9,5	-
021997	O 22 15 10	15	10	-

Main features

Type	Description
O23	Tube insert. In brass. Required if using tubes in Nylon (PA6), Polyurethane or Rilsan (PA11). For tubes see from page 4.65.1



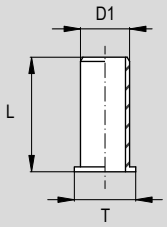

Dimensions

Code	Item	T (External Øtube)	D1	L	Weight (g)
022016	O 23 04 10	4	2,5	10	-
022011	O 23 06 12	6	4	12	-
022012	O 23 08 14	8	6	14	-
022013	O 23 10 16	10	8	16	-
022014	O 23 12 18	12	10	18	-
022015	O 23 15 20	15	12	20	-

STANDARD
fittings

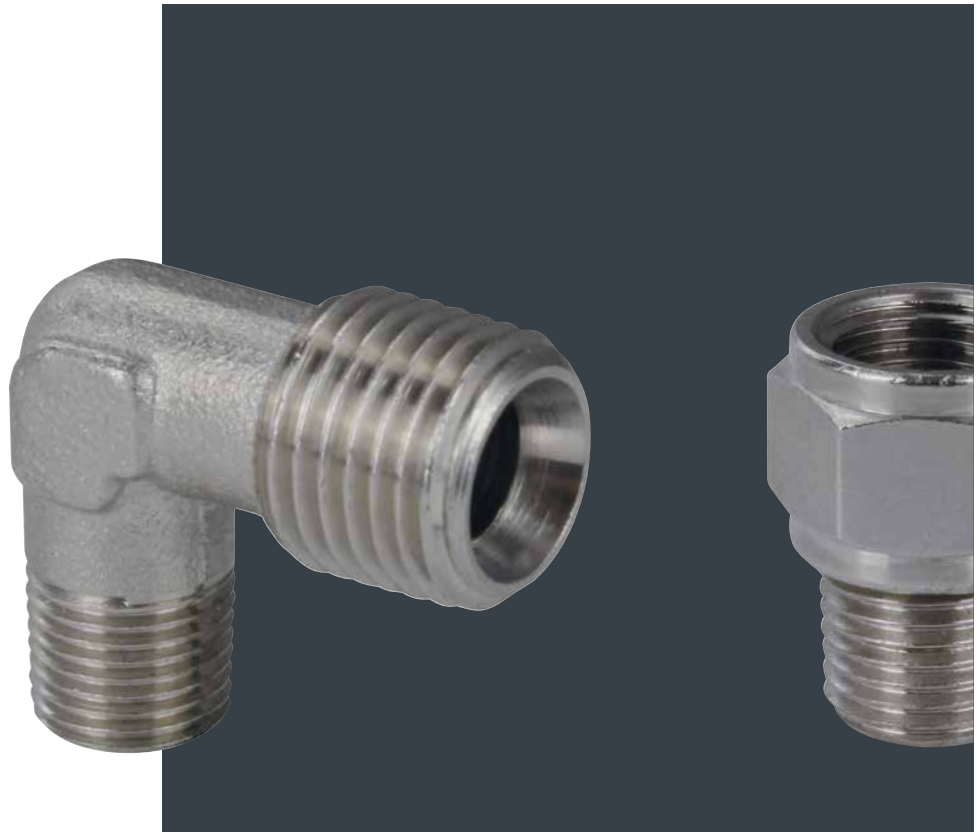

Find out our
key products

- **Solution for most applications**
- **Easy and intuitive choice**
- **Excellent value for money**
- **Wide availability**
- **Fast delivery**

Main features and certifications

Standard fittings in nickel-plated brass. Available in many versions and threads.
Supplied as standard in compliance to Reach and RoHS directives.

Series A

from page 4.35.10



Series of standard fittings available in many configurations, to adapt the connections of every installation. Available with taper BSPT threads and BSP threads, in various sizes.

Standard fittings
Series A



Code key

Series	Type*	Thread 1*	Thread 2*
A	**002**	**12**	**14**

Series	Type*	Thread 1* / Thread 2*
A	001, 002, 003, 004, 005, 006, 007, 008, 009, 010, 011, 012, 013, 014, 015, 016, 021, 022, 023, 024, 025, 026, 027, 035, 036, 039, 040, 041, 042, 044, 045, 046, 047	M5 = M5x0,8 18 = 1/8" 14 = 1/4" 38 = 3/8" 12 = 1/2" 34 = 3/4" 01 = 1"

Notes

For standard materials see the table below.

For special versions (**/S**), contact the sales department.

* For matching between fitting types and thread, seefrom page 4.35.12; for the specific type, see the following pages.

How to order

Series	Type	Thread 1	Thread 2
A	**002**	**12**	**14**

Technical data

Version	Series A
Fluid	Compressed air
Maximum pressure	60 bar
Temperature range*	-40°C ÷ +150°C
Parallel threads	UNI - ISO 228 / 1 (BSP)
Taper threads	UNI EN 10226-1 (BSPT)
Metric threads	UNI EN ISO 965-1

* For fittings with NBR seal is -20°C ÷ +80°C

Standard materials

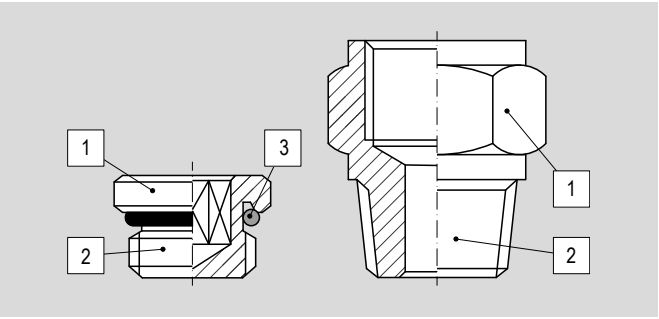

Position	Description	Material
1	Body	Nickel-plated brass
2	Thread	Nickel-plated brass
3	Seal*	NBR

*Where present

Fittings series A

Type			Taper threads (BSPT)	Parallel threads (BSP)	Metric threads	Stem Ø mm	Data sheet and code page
A001	M/F BSP reducer		-	1/8", 1/4", 3/8", 1/2", 3/4", 1"	M5x0,8	-	4.35.13
A002	M/F BSPT reducer		1/8", 1/4", 3/8", 1/2", 3/4", 1"	-	-	-	4.35.13
A003	M/F BSP increaser		-	1/8", 1/4", 3/8", 1/2", 3/4", 1"	M5x0,8	-	4.35.14
A004	M/F BSPT increaser		1/8", 1/4", 3/8", 1/2", 3/4", 1"	-	-	-	4.35.14
A039	M/F BSP extension		-	1/8", 1/4", 3/8", 1/2", 3/4", 1"	-	-	4.35.15
A007	Female socket		-	1/8", 1/4", 3/8", 1/2", 3/4", 1"	M5x0,8	-	4.35.15
A005	BSP nipple		-	1/8", 1/4", 3/8", 1/2", 3/4", 1"	M5x0,8	-	4.35.16
A006	BSPT nipple		1/8", 1/4", 3/8", 1/2", 3/4", 1"	-	-	-	4.35.16
A047	BSPT nipple union		1/8", 1/4", 3/8", 1/2", 3/4", 1"	-	-	-	4.35.17
A015	BSP hose adapter		-	1/8", 1/4", 3/8", 1/2"	-	7, 8, 9, 12, 17	4.35.17
A044	Female bulkhead		-	1/8", 1/4", 3/8", 1/2"	M5x0,8	-	4.35.18
A013	Nut		-	1/8", 1/4", 3/8", 1/2", 3/4", 1"	-	-	4.35.18
A008	Male BSP plug		-	1/8", 1/4", 3/8", 1/2", 3/4", 1"	M5x0,8	-	4.35.19
A016	Male BSPT plug		1/8", 1/4", 3/8", 1/2", 3/4", 1"	-	-	-	4.35.19
A009	Male BSP plug with O-ring		-	1/8", 1/4", 3/8", 1/2"	M5x0,8	-	4.35.20
A010	Female plug		-	1/8", 1/4", 3/8", 1/2", 3/4", 1"	M5x0,8	-	4.35.20
A011	BSP olive		-	1/8", 1/4", 3/8", 1/2"	-	-	4.35.21
A012	BSPT olive		1/8", 1/4", 3/8", 1/2"	-	-	-	4.35.21
A014	M/F BSP reducing insert		-	1/8", 1/4", 3/8", 1/2", 3/4", 1"	M5x0,8	-	4.35.22
A021	F/F elbow		-	1/8", 1/4", 3/8", 1/2", 3/4", 1"	M5x0,8	-	4.35.22
A022	M/F elbow		1/8", 1/4", 3/8", 1/2", 3/4", 1"	1/8", 1/4", 3/8", 1/2", 3/4", 1"	M5x0,8	-	4.35.23
A035	M/M elbow		1/8", 1/4", 3/8", 1/2", 3/4", 1"	-	M5x0,8	-	4.35.23
A023	F/F/F tee		-	1/8", 1/4", 3/8", 1/2", 3/4", 1"	M5x0,8	-	4.35.24

Fittings series A

Type			Taper threads (BSPT)	Parallel threads (BSP)	Metric threads	Stem Ø mm	Data sheet and code page
A024	F/M/F tee		1/8", 1/4", 3/8", 1/2", 3/4", 1"	1/8", 1/4", 3/8", 1/2", 3/4", 1"	M5x0,8	-	4.35.24
A025	M/F/F tee		1/8", 1/4", 3/8", 1/2", 3/4", 1"	1/8", 1/4", 3/8", 1/2", 3/4", 1"	M5x0,8	-	4.35.25
A027	M/M/F tee		1/8", 1/4", 3/8", 1/2", 3/4"	1/8", 1/4", 3/8", 1/2", 3/4"	-	-	4.35.25
A036	M/M/M tee		1/8", 1/4", 3/8", 1/2", 3/4", 1"	-	-	-	4.35.26
A045	M/F/M tee		1/8", 1/4", 3/8", 1/2", 3/4", 1"	1/8", 1/4", 3/8", 1/2", 3/4", 1"	-	-	4.35.26
A040	F/F/F Y		-	1/8", 1/4", 3/8", 1/2"	-	-	4.35.27
A041	F/M/F Y		1/8", 1/4", 3/8", 1/2"	1/8", 1/4", 3/8", 1/2"	-	-	4.35.27
A026	F/F/F/F +		-	1/8", 1/4", 3/8", 1/2"	-	-	4.35.28
A046	F/M/F/F +		1/8", 1/4", 3/8", 1/2"	1/8", 1/4", 3/8", 1/2"	-	-	4.35.28
A042	Female single banjo		-	1/8", 1/4", 3/8", 1/2"	M5x0,8	-	4.35.29

Main features

Type	Description
A001	M/F BSP reducer. In nickel-plated brass. For sealing washers see page 4.65.1



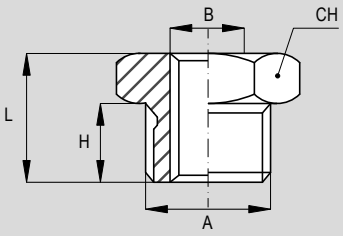

Dimensions

Code	Item	A	B	H	L	CH	Weight (g)
022301	A001 18 05	G1/8"	M5x0,8	6	10	14	-
022302	A001 14 18	G1/4"	G1/8"	8	13	17	-
022303	A001 38 18	G3/8"	G1/8"	9	14	19	-
022304	A001 38 14	G3/8"	G1/4"	9	14	19	-
022313	A001 12 18	G1/2"	G1/8"	9	15	24	-
022305	A001 12 14	G1/2"	G1/4"	9	15	24	-
022306	A001 12 38	G1/2"	G3/8"	9	15	24	-
022307	A001 34 14	G3/4"	G1/4"	11	16	30	-
022308	A001 34 38	G3/4"	G3/8"	11	16	30	-
022309	A001 34 12	G3/4"	G1/2"	11	16	30	-
022310	A001 01 38	G1"	G3/8"	12	19	36	-
022311	A001 01 12	G1"	G1/2"	12	19	36	-
022312	A001 01 34	G1"	G3/4"	12	19	36	-

Main features

Type	Description
A002	M/F BSPT reducer. In nickel-plated brass.



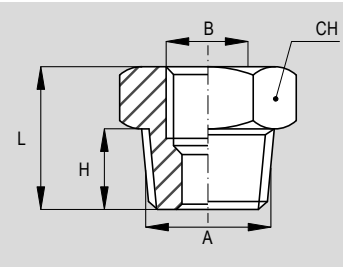

Dimensions

Code	Item	A	B	H	L	CH	Weight (g)
022331	A002 14 18	R1/4"	G1/8"	10	15	14	-
022332	A002 38 18	R3/8"	G1/8"	10	15	17	-
022333	A002 38 14	R3/8"	G1/4"	10	15	17	-
022342	A002 12 18	R1/2"	G1/8"	13	19	22	-
022334	A002 12 14	R1/2"	G1/4"	13	19	22	-
022335	A002 12 38	R1/2"	G3/8"	13	19	22	-
022336	A002 34 14	R3/4"	G1/4"	14	20,5	27	-
022337	A002 34 38	R3/4"	G3/8"	14	20,5	27	-
022338	A002 34 12	R3/4"	G1/2"	14	20,5	27	-
022339	A002 01 38	R1"	G3/8"	16	22	34	-
022340	A002 01 12	R1"	G1/2"	16	22	34	-
022341	A002 01 34	R1"	G3/4"	16	22	34	-

Main features

Type	Description
A003	M/F BSP increaser. In nickel-plated brass. For sealing washers see page 4.65.1



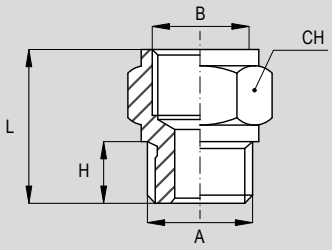

Dimensions

Code	Item	A	B	H	L	CH	Weight (g)
022361	A003 05 05	M5x0,8	M5x0,8	4	11	8	-
022362	A003 05 18	M5x0,8	G1/8"	5	16	14	-
022363	A003 18 18	G1/8"	G1/8"	6	16	14	-
022364	A003 18 14	G1/8"	G1/4"	6	19,5	17	-
022365	A003 18 38	G1/8"	G3/8"	6	20	22	-
022366	A003 14 14	G1/4"	G1/4"	8	21	17	-
022367	A003 14 38	G1/4"	G3/8"	8	21	22	-
022368	A003 14 12	G1/4"	G1/2"	8	25	27	-
022369	A003 38 38	G3/8"	G3/8"	9	23	22	-
022370	A003 38 12	G3/8"	G1/2"	9	26	27	-
022371	A003 12 12	G1/2"	G1/2"	10	26	27	-
022372	A003 38 34	G3/8"	G3/4"	9	26	32	-
022373	A003 12 34	G1/2"	G3/4"	10	27	32	-
022374	A003 34 34	G3/4"	G3/4"	11	28	32	-
022375	A003 12 01	G1/2"	G1"	10	29	38	-
022376	A003 34 01	G3/4"	G1"	11	30	38	-
022377	A003 01 01	G1"	G1"	12	31	38	-

Main features

Type	Description
A004	M/F BSPT increaser. In nickel-plated brass.



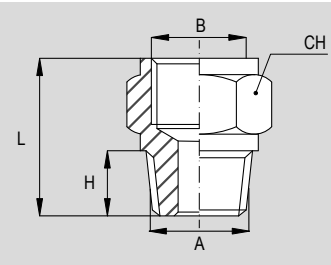

Dimensions

Code	Item	A	B	H	L	CH	Weight (g)
022391	A004 18 18	R1/8"	G1/8"	7,5	17,5	14	-
022392	A004 18 14	R1/8"	G1/4"	7,5	21	17	-
022393	A004 18 38	R1/8"	G3/8"	7,5	22	22	-
022394	A004 14 14	R1/4"	G1/4"	10	24	17	-
022395	A004 14 38	R1/4"	G3/8"	10	26	22	-
022396	A004 14 12	R1/4"	G1/2"	10	28	27	-
022397	A004 38 38	R3/8"	G3/8"	10	26	22	-
022398	A004 38 12	R3/8"	G1/2"	10	28	27	-
022399	A004 12 12	R1/2"	G1/2"	12	30	27	-
022400	A004 38 34	R3/8"	G3/4"	10	27	32	-
022401	A004 12 34	R1/2"	G3/4"	13	30	32	-
022402	A004 34 34	R3/4"	G3/4"	14	31	32	-
022403	A004 12 01	R1/2"	G1"	13	32	38	-
022404	A004 34 01	R3/4"	G1"	14	33	38	-
022405	A004 01 01	R1"	G1"	16	35	38	-

Main features

Type	Description
A039	M/F BSP extension In nickel-plated brass. For sealing washers see page 4.65.1



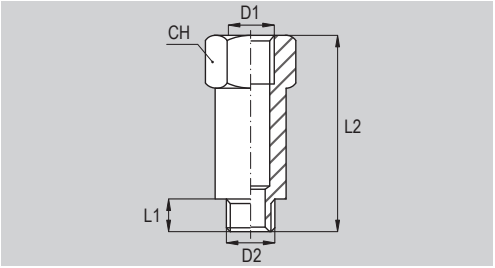

Dimensions

Code	Item	D1	D2	L1	L2	CH	Weight (g)
022821	A039 18 C23	G1/8”	G1/8”	6	23	12	-
022822	A039 18 L44	G1/8”	G1/8”	6	44	12	-
022823	A039 14 C28	G1/4”	G1/4”	8	28	16	-
022824	A039 14 L45	G1/4”	G1/4”	8	45	16	-
022825	A039 12 C36	G1/2”	G1/2”	9	36	24	-
022826	A039 14 L51	G1/4”	G1/4”	8	51	16	-
022827	A039 38 L41	G3/8”	G3/8”	9	41	22	-
022829	A039 34 L50	G3/4”	G3/4”	-	50	30	-
022830	A039 01 L50	G1”	G1”	-	50	38	-

Main features

Type	Description
A007	Female socket. In nickel-plated brass.



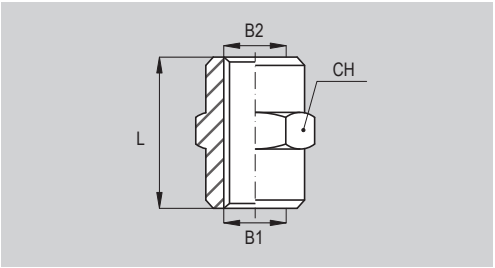

Dimensions

Code	Item	B1	B2	L	CH	Weight (g)
022481	A007 05 05	M5x0,8	M5x0,8	11	8	-
022482	A007 05 18	M5x0,8	G1/8”	12,5	14	-
022483	A007 18 18	G1/8”	G1/8”	15	14	-
022484	A007 18 14	G1/8”	G1/4”	18,5	17	-
022485	A007 18 38	G1/8”	G3/8”	20	22	-
022486	A007 14 14	G1/4”	G1/4”	22	17	-
022487	A007 14 38	G1/4”	G3/8”	21	22	-
022488	A007 14 12	G1/4”	G1/2”	24	27	-
022489	A007 38 38	G3/8”	G3/8”	23	22	-
022490	A007 38 12	G3/8”	G1/2”	24	27	-
022491	A007 12 12	G1/2”	G1/2”	28,5	27	-
022492	A007 12 34	G1/2”	G3/4”	25	32	-
022493	A007 34 34	G3/4”	G3/4”	29	32	-
022494	A007 34 01	G3/4”	G1”	25	38	-
022495	A007 01 01	G1”	G1”	31	38	-

Main features

Type	Description
A005	BSP nipple. In nickel-plated brass. For sealing washers see page 4.65.1



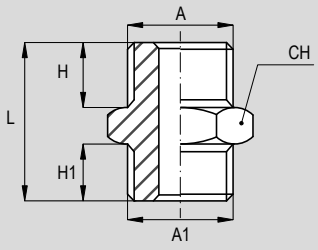

Dimensions

Code	Item	A	A1	H	H1	L	CH	Weight (g)
022421	A005 05 05	M5x0,8	M5x0,8	4	4	11	8	-
022422	A005 05 18	M5x0,8	G1/8"	4	6	14	14	-
022423	A005 18 18	G1/8"	G1/8"	6	6	16,5	14	-
022424	A005 18 14	G1/8"	G1/4"	6	8	19	17	-
022425	A005 18 38	G1/8"	G3/8"	6,5	9	20	19	-
022426	A005 14 14	G1/4"	G1/4"	8	8	21	17	-
022427	A005 14 38	G1/4"	G3/8"	8	9	22	19	-
022428	A005 14 12	G1/4"	G1/2"	8	10	23,5	24	-
022429	A005 38 38	G3/8"	G3/8"	9	9	23	19	-
022430	A005 38 12	G3/8"	G1/2"	9	10	24,5	24	-
022431	A005 12 12	G1/2"	G1/2"	10	10	25,5	24	-
022432	A005 12 34	G1/2"	G3/4"	10	11	27	30	-
022433	A005 34 34	G3/4"	G3/4"	11	11	28	30	-
022434	A005 34 01	G3/4"	G1"	11	13	30	36	-
022435	A005 01 01	G1"	G1"	12	12	31	36	-

Main features

Type	Description
A006	BSPT nipple. In nickel-plated brass.



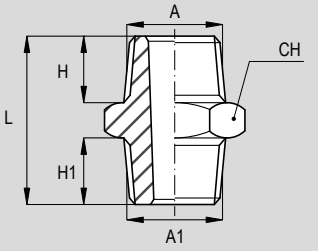

Dimensions

Code	Item	A	A1	H	H1	L	CH	Weight (g)
022451	A006 18 18	R1/8"	R1/8"	7,5	7,5	19	12	-
022452	A006 18 14	R1/8"	R1/4"	7,5	10	22,5	14	-
022453	A006 18 38	R1/8"	R3/8"	7,5	10	22,5	17	-
022454	A006 14 14	R1/4"	R1/4"	10	10	25	14	-
022455	A006 14 38	R1/4"	R3/8"	10	10	25	17	-
022456	A006 14 12	R1/4"	R1/2"	11,2	13,5	30	22	-
022457	A006 38 38	R3/8"	R3/8"	10	10	25	17	-
022458	A006 38 12	R3/8"	R1/2"	10	12	28	22	-
022459	A006 12 12	R1/2"	R1/2"	12	12	30	22	-
022460	A006 12 34	R1/2"	R3/4"	12	14	32	27	-
022461	A006 34 34	R3/4"	R3/4"	14	14	34	27	-
022462	A006 34 01	R3/4"	R1"	14	16	36	34	-
022463	A006 01 01	R1"	R1"	16	16	39	34	-

Main features

Type	Description
A047	BSPT nipple union. In nickel-plated brass.



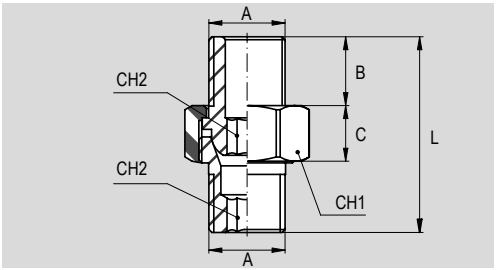

Dimensions

Code	Item	A	B	C	L	CH1	CH2	Weight (g)
023471	A047 18 18	R1/8”	9	8,5	27	15	5	-
023472	A047 14 14	R1/4”	12	9,5	33,5	19	6	-
023473	A047 38 38	R3/8”	13	10,2	36,5	22	8	-
023474	A047 12 12	R1/2”	16	12	44	27	12	-
023475	A047 34 34	R3/4	18	17	53	36	14	-
023476	A047 01 01	R1”	22	20	64	46	19	-

Main features

Type	Description
A015	BSP hose adapter. In nickel-plated brass. For sealing washers see page 4.65.1



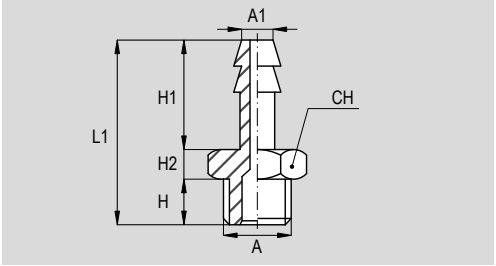

Dimensions

Code	Item	A	A1	H	H1	H2	L1	CH	Weight (g)
022601	A015 18 07	G1/8”	7	6	18	4	28	12	-
022602	A015 18 08	G1/8”	8	6	18	4	28	12	-
022603	A015 18 09	G1/8”	9	6	18	4	28	12	-
022604	A015 14 07	G1/4”	7	8	18	4,5	30,5	17	-
022605	A015 14 08	G1/4”	8	8	18	4,5	30,5	17	-
022606	A015 14 09	G1/4”	9	8	18	4,5	30,5	17	-
022607	A015 14 12	G1/4”	12	8	18	4,5	30,5	17	-
022608	A015 38 09	G3/8”	9	9	18	5	32	19	-
022609	A015 38 12	G3/8”	12	9	18	5	32	19	-
022610	A015 38 17	G3/8”	17	9	18	5	32	19	-
022611	A015 12 12	G1/2”	12	10	18	6	34	24	-
022612	A015 12 17	G1/2”	17	9	24	5	38	24	-

Main features

Type	Description
A044	Female bulkhead. In nickel-plated brass.



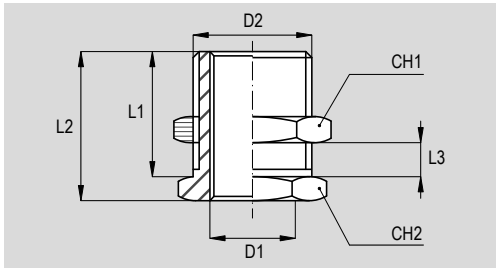

Dimensions

Code	Item	D1	D2	L1	L2	L3 (max)	CH1	CH2	Weight (g)
022881	A044 05 05	M5x0,8	M10x1	9,5	13	6	14	14	-
022882	A044 18 18	G1/8”	M16x1,5	15	19	10	22	19	-
022883	A044 14 14	G1/4”	M20x1,5	19	23	14	27	24	-
022884	A044 38 38	G3/8”	M26x1,5	22	27	16	32	30	-
022885	A044 12 12	G1/2”	M28x1,5	28	34	21	36	32	-

Main features

Type	Description
A013	Nut. In nickel-plated brass.



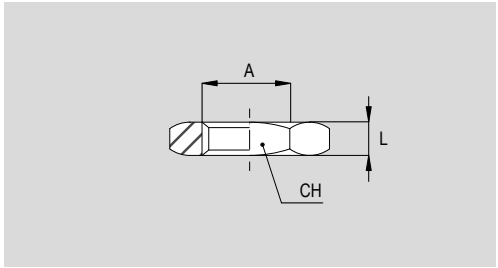

Dimensions

Code	Item	A	CH	L	Weight (g)
022551	A013 18 18	G1/8”	12	3	-
022552	A013 14 14	G1/4”	16	3	-
022553	A013 38 38	G3/8”	19	4	-
022554	A013 12 12	G1/2”	24	4	-
022555	A013 34 34	G3/4”	30	5	-
022556	A013 01 01	G1”	38	6	-

Main features

Type	Description
A008	Male BSP plug. In nickel-plated brass. For sealing washers see page 4.65.1



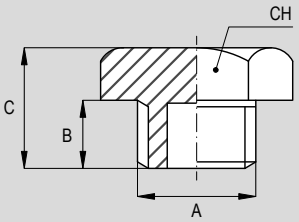

Dimensions

Code	Item	A	B	C	CH	Weight (g)
022517	A008 05 05	M5x0,8	4,5	7,5	8	-
022511	A008 18 18	G1/8”	6	10	14	-
022512	A008 14 14	G1/4”	8	12,5	17	-
022513	A008 38 38	G3/8”	9	14	19	-
022514	A008 12 12	G1/2”	10	15	24	-
022515	A008 34 34	G3/4”	11	16,5	30	-
022516	A008 01 01	G1”	13	19	36	-

Main features

Type	Description
A016	Male BSPT plug. In nickel-plated brass.



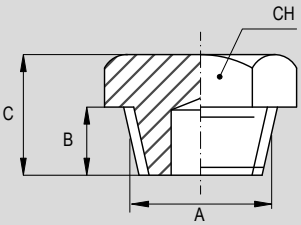

Dimensions

Code	Item	A	B	C	CH	Weight (g)
022471	A016 18 18	R1/8”	7,5	11,5	14	-
022472	A016 14 14	R1/4”	11	15,5	17	-
022473	A016 38 38	R3/8”	11	16	19	-
022474	A016 12 12	R1/2”	13	18,5	24	-
022475	A016 34 34	R3/4”	14	20	30	-
022476	A016 01 01	R1”	15,5	22	36	-

Main features

Type	Description
A009	Male BSP plug with O-ring. In nickel-plated brass, O-ring in NBR.



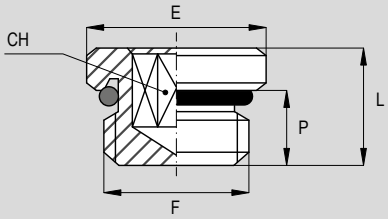

Dimensions

Code	Item	F	CH	P	L	E	Weight (g)
022521	A009 05 05	M5x0,8	2,5	4,5	7,2	8	-
022522	A009 18 18	G1/8”	5	6,5	9,5	14	-
022523	A009 14 14	G1/4”	6	8	11,5	17	-
022524	A009 38 38	G3/8”	8	9	12,5	20	-
022525	A009 12 12	G1/2”	10	10	14	26	-

Main features

Type	Description
A010	Female plug. In nickel-plated brass.



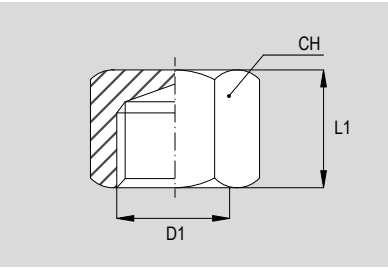

Dimensions

Code	Item	D1	L1	CH	Weight (g)
022537	A010 05 05	M5x0,8	7	8	-
022531	A010 18 18	G1/8”	11	14	-
022532	A010 14 14	G1/4”	13	17	-
022533	A010 38 38	G3/8”	14	20	-
022534	A010 12 12	G1/2”	15	24	-
022535	A010 34 34	G3/4”	16	30	-
022536	A010 01 01	G1”	18	38	-

Main features

Type	Description
A011	BSP olive. In nickel-plated brass.



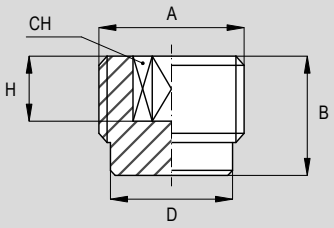

Dimensions

Code	Item	A	B	CH	D	H	Weight (g)
022541	A011 18 18	G1/8”	7,5	5	8	4	-
022542	A011 14 14	G1/4”	10	6	11	6	-
022543	A011 38 38	G3/8”	10	8	14	6	-
022544	A011 12 12	G1/2”	11	10	18	7	-

Main features

Type	Description
A012	BSPT olive. In nickel-plated brass.



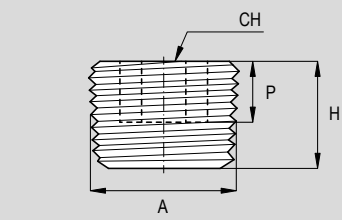

Dimensions

Code	Item	A	H	P	CH	Weight (g)
022546	A012 18 18	R1/8”	7,5	4	5	-
022547	A012 14 14	R1/4”	10	5	6	-
022548	A012 38 38	R3/8”	10	6	8	-
022549	A012 12 12	R1/2”	12	8	10	-

Main features

Type	Description
A014	M/F BSP reducing insert. In nickel-plated brass.



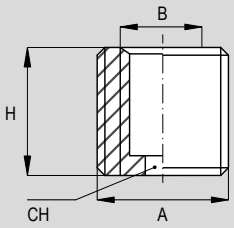

Dimensions

Code	Item	A	B	H	CH	Weight (g)
022571	A014 18 05	G1/8”	M5x0,8	6	3	-
022572	A014 14 18	G1/4”	G1/8”	7	6	-
022573	A014 38 18	G3/8”	G1/8”	9	6	-
022574	A014 38 14	G3/8”	G1/4”	9	8	-
022575	A014 12 14	G1/2”	G1/4”	10	8	-
022576	A014 12 38	G1/2”	G3/8”	10	10	-
022577	A014 34 12	G3/4”	G1/2”	12	14	-
022578	A014 01 34	G1”	G3/4”	14	16	-

Main features

Type	Description
A021	F/F elbow. In nickel-plated brass.



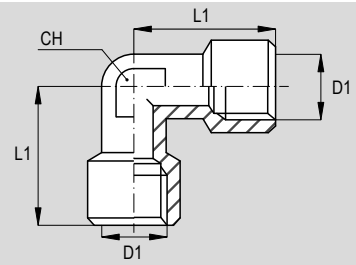

Dimensions

Code	Item	D1	L1	CH	Weight (g)
022717	A021 05 05	M5x0,8	11	9	-
022711	A021 18 18	G1/8”	21	10	-
022712	A021 14 14	G1/4”	26	13	-
022713	A021 38 38	G3/8”	30	17	-
022714	A021 12 12	G1/2”	34	21	-
022715	A021 34 34	G3/4”	36,5	25	-
022716	A021 01 01	G1”	45	30	-

Main features

Type	Description
A022	M/F elbow. In nickel-plated brass.



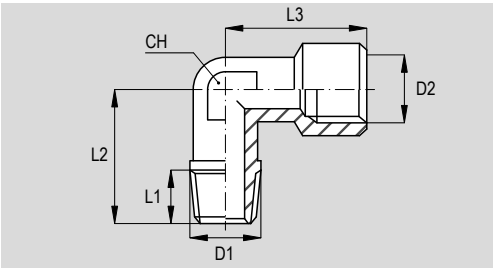

Dimensions

Code	Item	D1	D2	L1	L2	L3	CH	Weight (g)
022737	A022 05 05	M5x0,8	M5x0,8	4	11,5	11	9	-
022731	A022 18 18	R1/8”	G1/8”	7,5	18	21	10	-
022732	A022 14 14	R1/4”	G1/4”	11	25	26	13	-
022733	A022 38 38	R3/8”	G3/8”	11,5	28	30	17	-
022734	A022 12 12	R1/2”	G1/2”	14	30	34	21	-
022735	A022 34 34	R3/4”	G3/4”	14,5	32	36,5	25	-
022736	A022 01 01	R1”	G1”	16,8	39	45	30	-

Main features

Type	Description
A035	M/M elbow. In nickel-plated brass.



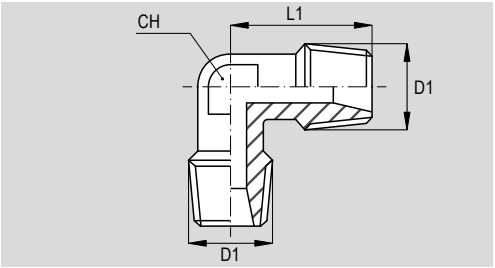

Dimensions

Code	Item	D1	L1	CH	Weight (g)
022787	A035 05 05	M5x0,8	11,5	9	-
022781	A035 18 18	R1/8”	18	10	-
022782	A035 14 14	R1/4”	22	13	-
022783	A035 38 38	R3/8”	26	17	-
022784	A035 12 12	R1/2”	30	21	-
022785	A035 34 34	R3/4”	32	25	-
022786	A035 01 01	R1”	39	30	-

Main features

Type	Description
A023	F/F/F tee. In nickel-plated brass.



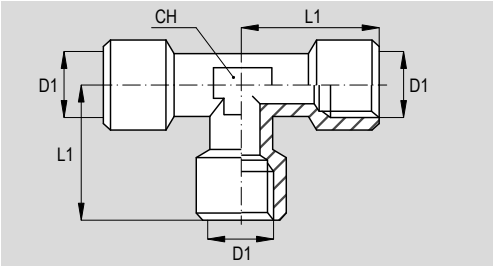

Dimensions

Code	Item	D1	L1	Ch	Weight (g)
022747	A023 05 05	M5x0,8	11	9	-
022741	A023 18 18	G1/8”	21	12	-
022742	A023 14 14	G1/4”	26	13	-
022743	A023 38 38	G3/8”	30	17	-
022744	A023 12 12	G1/2”	34	21	-
022745	A023 34 34	G3/4”	36,5	25	-
022746	A023 01 01	G1”	45	30	-

Main features

Type	Description
A024	F/M/F tee. In nickel-plated brass.



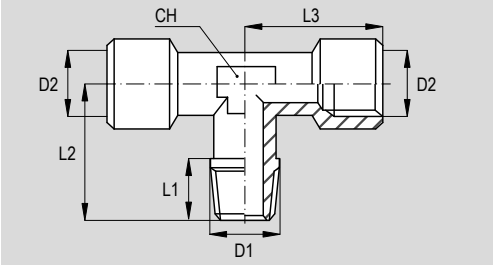

Dimensions

Code	Item	D1	D2	L1	L2	L3	CH	Weight (g)
022757	A024 05 05	M5x0,8	M5x0,8	4	11,5	11	9	-
022751	A024 18 18	R1/8”	G1/8”	7,5	18	21	10	-
022752	A024 14 14	R1/4”	G1/4”	11	25	26	13	-
022753	A024 38 38	R3/8”	G3/8”	11,5	28	30	17	-
022754	A024 12 12	R1/2”	G1/2”	14	30	34	21	-
022755	A024 34 34	R3/4”	G3/4”	14,5	32	36,5	25	-
022756	A024 01 01	R1”	G1”	16,5	39	45	30	-

Main features

Type	Description
A025	M/F/F tee. In nickel-plated brass.



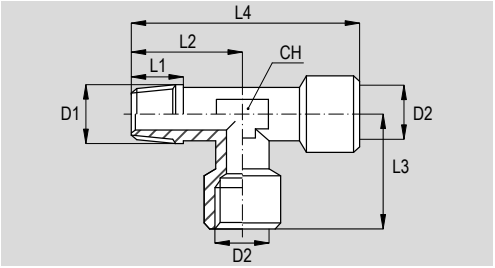

Dimensions

Code	Item	D1	D2	L1	L2	L3	L4	CH	Weight (g)
022767	A025 05 05	M5x0,8	M5x0,8	4	11,5	11	22	9	-
022761	A025 18 18	R1/8”	G1/8”	7,5	18	21	39,5	10	-
022762	A025 14 14	R1/4”	G1/4”	11	25	26	48,5	13	-
022763	A025 38 38	R3/8”	G3/8”	11,5	28	30	53,5	17	-
022764	A025 12 12	R1/2”	G1/2”	14	30	34	63	21	-
022765	A025 34 34	R3/4”	G3/4”	14,5	33	36,5	68,5	25	-
022766	A025 01 01	R1”	G1”	16,5	39	45	84	30	-

Main features

Type	Description
A027	M/M/F tee. In nickel-plated brass.



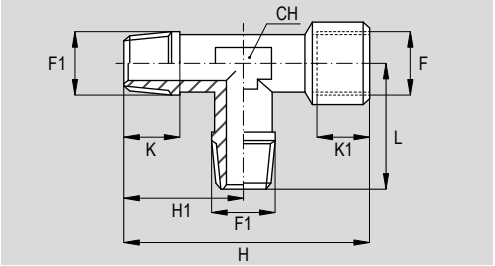

Dimensions

Code	Item	F	F1	K	K1	H	H1	L	CH	Weight (g)
022815	A027 18 18	G1/8”	R1/8”	8	8	39,5	18,5	18,5	10	-
022816	A027 14 14	G1/4”	R1/4”	11	11	49	23,5	23,5	13	-
022817	A027 38 38	G3/8”	R3/8”	11,5	11,5	54	26	26	17	-
022818	A027 12 12	G1/2”	R1/2”	14	14	64,5	31	31	21	-
022819	A027 34 34	G3/4”	R3/4”	14,5	16,5	68,5	36,5	36,5	25	-

Main features

Type	Description
A036	M/M/M tee. In nickel-plated brass.



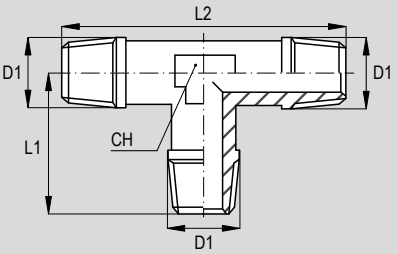

Dimensions

Code	Item	D1	L1	L2	CH	Weight (g)
022801	A036 18 18	R1/8”	18	36	10	-
022802	A036 14 14	R1/4”	22	44	13	-
022803	A036 38 38	R3/8”	26	52	17	-
022804	A036 12 12	R1/2”	30	60	21	-
022805	A036 34 34	R3/4”	32	64	25	-
022806	A036 01 01	R1”	39	78	30	-

Main features

Type	Description
A045	M/F/M tee. In nickel-plated brass.



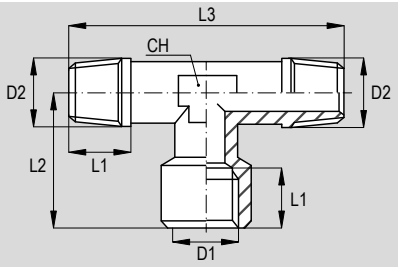

Dimensions

Code	Item	D1	D2	L1	L2	L3	CH	Weight (g)
022901	A045 18 18	G1/8”	R1/8”	7,5	21	36	10	-
022902	A045 14 14	G1/4”	R1/4”	11	26	44	13	-
022903	A045 38 38	G3/8”	R3/8”	11,5	27	51	17	-
022904	A045 12 12	G1/2”	R1/2”	14	32	59	21	-
022905	A045 34 34	G3/4”	R3/4”	14,5	36,5	64	25	-
022906	A045 01 01	G1”	R1”	16,5	45	78	30	-

Main features

Type	Description
A040	F/F/F Y. In nickel-plated brass.



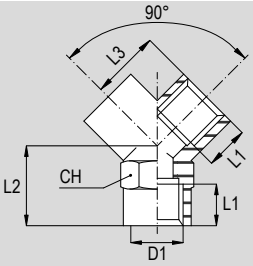

Dimensions

Code	Item	D1	L1	L2	L3	CH	Weight (g)
022841	A040 18 18	G1/8”	8	12	14	13	-
022842	A040 14 14	G1/4”	11	14	17	17	-
022843	A040 38 38	G3/8”	11,5	16	19	20	-
022844	A040 12 12	G1/2”	14	19	24,5	25	-

Main features

Type	Description
A041	F/M/F Y. In nickel-plated brass.



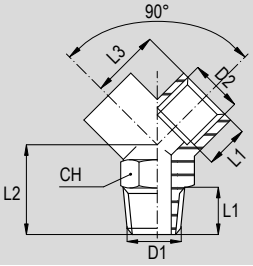

Dimensions

Code	Item	D1	D2	L1	L2	L3	CH	Weight (g)
022861	A041 18 18	R1/8”	G1/8”	8	16	14	13	-
022862	A041 14 14	R1/4”	G1/4”	11	20	17	17	-
022863	A041 38 38	R3/8”	G3/8”	11,5	22	19	20	-
022864	A041 12 12	R1/2”	G1/2”	14	27	24,5	25	-

Main features

Type	Description
A026	F/F/F/F +. In nickel-plated brass.



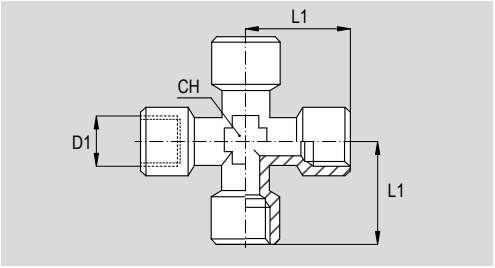

Dimensions

Code	Item	D1	L1	CH	Weight (g)
022771	A026 18 18	G1/8”	21	10	-
022772	A026 14 14	G1/4”	26	13	-
022773	A026 38 38	G3/8”	30	17	-
022774	A026 12 12	G1/2”	34	21	-

Main features

Type	Description
A046	F/M/F/F +. In nickel-plated brass.



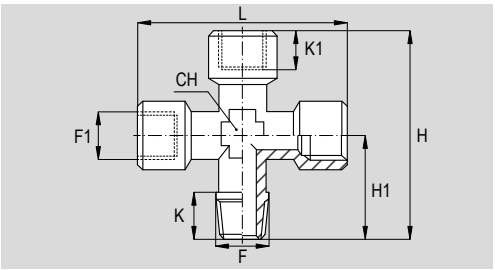

Dimensions

Code	Item	F	F1	K	K1	H	H1	L	CH	Weight (g)
022891	A046 18 18	R1/8”	G1/8”	8	8	39,5	18,5	42	10	-
022892	A046 14 14	R1/4”	G1/4”	11	11	49	23,5	51	13	-
022893	A046 38 38	R3/8”	G3/8”	11,5	11,5	54	26	56	17	-
022894	A046 12 12	R1/2”	G1/2”	14	14	64,5	31	67	21	-

Main features

Type	Description
A042	Female single banjo. In nickel-plated brass. Compatible with bolt types R31, R32, R59 and R60. Compatible with flow regulators typer V14 and V15. Compatible with accessories with integrated function types V45, V46 and V47.



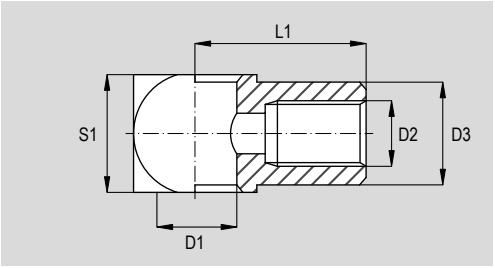

Dimensions

Code	Item	D1	D2	D3	L1	S1	Weight (g)
022875	A042 05 05	5,1	M5x0,8	9	11	10	-
022871	A042 18 18	10	G1/8”	14	17	15	-
022872	A042 14 14	13,2	G1/4”	17	22	18	-
022873	A042 38 38	17	G3/8”	20	26	20	-
022874	A042 12 12	21	G1/2”	25	32	24	-

QUICK-LOCK
fittings



Find out our
key products

- **Solution for most applications**
- **Easy and intuitive choice**
- **Excellent value for money**
- **Wide availability**
- **Fast delivery**

Main features and certifications

Quick-lock couplings single shut off (only on coupling) in brass not nickel-plated. Connection tightness of the coupling with the stem is granted by a series of spheres. This allows a longer life time even when connections and disconnections are frequent. Divided in couplings (type KA) and stems (type SF), are available in different sizes (20, 21 and 26) and many configurations.
Supplied as standard in compliance to Reach and RoHS directives.

Quick-lock couplings

from page 4.40.10



Quick-lock couplings in standard brass (not nickel-plated) with european profile. Availables in many configurations and in three sizes.
Size 20 (DN 2,7) is compact dimensions and can be used in different fields, suitable for chemical, medical, pharmaceutical and similar. Size 21 (DN 5) is the most common size, so is used in various fields. Size 26 (DN 7,2) is the biggest, is used in almost every field, and is often called "universal".



Quick-lock couplings



Code key

Size	Series (1)	Type (1)	Thread or Tube (1)	Material	Seals	Surface treatment
21	**KA**	**AW**	**13**	**M**	**P**	**X**

Size

20 = 6 mm² (DN 2,7)
21 = 20 mm² (DN 5)
26 = 40 mm² (DN7,2)

Series (1)

KA = Coupling
SF = Stem

Type (1)

AM = Male metric thread (DIN 13)
AD = Male metric thread (DIN 2353, ISO 8434-1)
AW = BSP male thread (ISO 228)
IM = Metric female thread (DIN 13)
IW = BSP female thread (ISO 228)
TF = With hose adapter
KO = With rapid fitting
KS = With bulkhead rapid fitting
TS = With bulkhead hose adapter
KK = With rapid fitting and anti-deviation spring

Thread or Tube (1)

03 = -	Ø 3
04 = -	Ø 4
05 = M5x0,8	Ø 5
06 = -	Ø 6
08 = -	Ø 8
09 = -	Ø 9
10 = M10x1	Ø 10
10 = 1/8"	-
12 = M12x1,5	Ø 12
13 = 1/4"	Ø 13
14 = M14x1,5	-
16 = M16x1,5	-
17 = 3/8"	-
18 = M18x1,5	-
21 = 1/2"	-

Material

M = Brass

Seals

P = NBR
X = None

Surface treatment

X = None

Notes

The options in the same grind are alternative to each others.

For standard materials and technical features see page 4.40.12

(1) For matching between size, coupling, stem, type and thread or tube diameter, see from page 4.40.11; for the specific type, see the following pages.

On request are also available other types, sizes, material, seals and surface treatments. For further infomations and availability, please contact the sales department.

How to order - Couplings

Size	Series	Type	Thread	Material	Seals	Surface treatment
21	**KA**	**AW**	**13**	**M**	**P**	**X**

How to order - Stems

Size	Series	Type	Thread	Material	Seals	Surface treatment
21	**SF**	**KO**	**08**	**M**	**X**	**X**

Quick-lock couplings

Type				Parallel threads (BSP)	Metric threads	For tube (internal) Ø mm	Data sheet and code page
KA	AM	Coupling with male metric thread (DIN 13)		-	M5x0,8	-	4.40.20
KA	AD	Coupling with male metric thread (DIN 2353, ISO 8434-1)		-	M12x1,5, M14x1,5, M16x1,5, M18x1,5	-	4.40.20
KA	AW	Coupling with BSP male thread (ISO 228)		1/8", 1/4", 3/8", 1/2"	-	-	4.40.20
KA	IM	Coupling with female metric thread (DIN 13)		-	M5x0,8, M12x1,5, M14x1,5, M16x1,5, M18x1,5	-	4.40.20
KA	IW	Coupling with BSP female thread (ISO 228)		1/8", 1/4", 3/8", 1/2"	-	-	4.40.20
KA	TF	Coupling with hose adapter		-	-	3, 4, 5, 6, 8, 9, 10, 13	4.40.21
KA	KO	Coupling with rapid fitting		-	-	4, 5, 6, 8, 10, 12	4.40.21
KA	KS	Coupling with bulkhead rapid fitting		-	-	4, 5, 6	4.40.22
KA	TS	Coupling with bulkhead hose adapter		-	-	3, 4, 6, 8, 9, 10	4.40.22
KA	KK	Coupling with rapid fitting and anti-deviation spring		-	-	6, 8, 10, 12	4.40.23
SF	AM	Stem with male metric thread (DIN 13)		-	M5x0,8	-	4.40.40
SF	AD	Stem with male metric thread (DIN 2353, ISO 8434-1)		-	M12x1,5, M14x1,5, M16x1,5, M18x1,5	-	4.40.40
SF	AW	Stem with BSP male thread (ISO 228)		1/8", 1/4", 3/8", 1/2"	-	-	4.40.40
SF	IM	Stem with female metric thread (DIN 13)		-	M5x0,8, M12x1,5, M14x1,5, M16x1,5, M18x1,5	-	4.40.40
SF	IW	Stem with BSP female thread (ISO 228)		1/8", 1/4", 3/8", 1/2"	-	-	4.40.40
SF	TF	Stem with hose adapter		-	-	3, 4, 5, 6, 8, 9, 10, 13	4.40.41
SF	KO	Stem with rapid fitting		-	-	4, 5, 6, 8, 10, 12	4.40.41
SF	KS	Stem with bulkhead rapid fitting		-	-	4, 5, 6, 8	4.40.42
SF	TS	Stem with bulkhead hose adapter		-	-	3, 4, 5, 6, 8, 10	4.40.42
SF	KK	Stem with rapid fitting and anti-deviation spring		-	-	6, 8, 10, 12	4.40.43

Technical data

Series	KA			SF		
Size	20	21	26	20	21	26
	6 mm² (DN 2,7)	20 mm² (DN 5)	40 mm² (DN 7,2)	6 mm² (DN 2,7)	20 mm² (DN 5)	40 mm² (DN 7,2)
Fluid	Compressed air, water, non-aggressive fluids					
Pressure range	0 ÷ 35 bar					
Vacuum	-99 KPa					
Temperature range	-20°C ÷ +100°C					
Metric threads	DIN 13	DIN 2353, ISO 8434-1		DIN 13	DIN 2353, ISO 8434-1	
Parallel threads	ISO 228					
Tubes	Calibrated Nylon (PA6), Polyurethane (PU) and Rilsan (PA11)					

Standard materials

Series	KA	SF
Body	Brass OT58	
Valve	Brass OT58	-
Releasing sleeve	Brass OT58	
Springs	Stainless Steel AISI 301	
Elastic ring	Stainless Steel AISI 301	
Spheres	Stainless Steel AISI 420	
Seals	NBR	

Flow diagram

P = 6 bar, with ΔP 1 bar

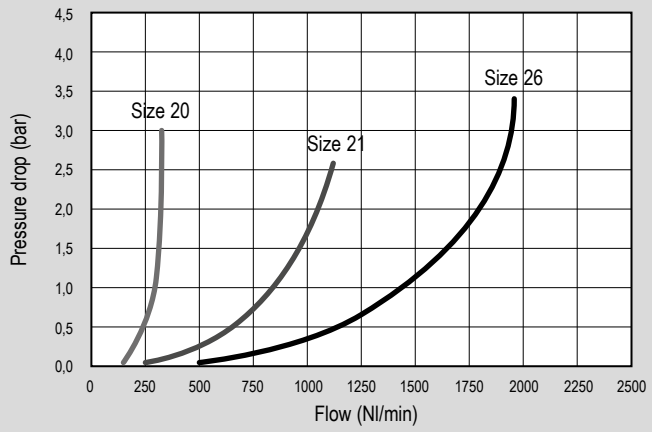

Main features

Type	Description
KA AD	Coupling with male metric thread (DIN 13)
KA AM	Coupling with male metric thread (DIN 2353, ISO 8434-1)
KA AW	Coupling with BSP male thread (ISO 228)



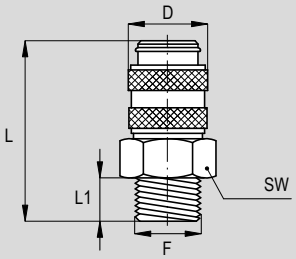

Dimensions

Code	Item	Size	F (Thread)	SW	L	D	L1	Weight (g)
570002	20KAAM05MPX	20 (DN 2,7)	M5X0,8	9	26	10	5	9
570015	20KAAW10MPX		G1/8"	11	28	10	7	12
570043	21KAAW10MPX	21 (DN 5)	G1/8"	14	37	16	7	27
570044	21KAAW13MPX		G1/4"	17	38	16	9	36
570045	21KAAW17MPX		G3/8"	19	38	16	9	43
570046	21KAAD12MPX		M12x1,5	17	39	16	10	37
570047	21KAAD14MPX		M14x1,5	17	39	16	10	37
570100	26KAAW10MPX	26 (DN7,2)	G1/8"	22	38	27	7	70
570006	26KAAW13MPX		G1/4"	22	40	27	9	73
570101	26KAAW17MPX		G3/8"	22	41	27	9	76
570102	26KAAW21MPX		G1/2"	24	41	27	10	87
570104	26KAAD14MPX		M14x1,5	22	40	27	9	75
570105	26KAAD16MPX		M16x1,5	22	40	27	9	75
570106	26KAAD18MPX		M18x1,5	22	40	27	10	78

Main features

Type	Description
KA IM	Coupling with female metric thread (DIN 13)
KA IW	Coupling with BSP female thread (ISO 228)



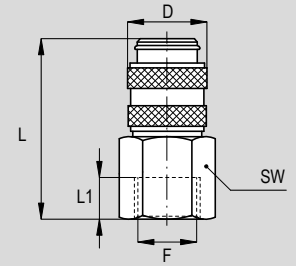

Dimensions

Code	Item	Size	F (Thread)	SW	L	D	L1	Weight (g)
570016	20KAIM05MPX	20 (DN 2,7)	M5X0,8	9	26	10	5	10
570017	20KAIW10MPX		G1/8"	12	28	10	7	14
570048	21KAIW10MPX	21 (DN 5)	G1/8"	14	37	16	9	32
570049	21KAIW13MPX		G1/4"	17	38	16	9	38
570050	21KAIW17MPX		G3/8"	19	39	16	10,5	39
570051	21KAIM12MPX		M12x1,5	17	38	16	9	39
570052	21KAIM14MPX		M14x1,5	17	38	16	9	37
570107	26KAIW13MPX	26 (DN7,2)	G1/4"	22	41	27	10,5	92
570108	26KAIW17MPX		G3/8"	22	41	27	10,5	85
570109	26KAIW21MPX		G1/2"	24	42,5	27	12	87
570110	26KAIM14MPX		M14x1,5	22	41,5	27	11	90
570111	26KAIM16MPX		M16x1,5	22	41,5	27	11	84
570112	26KAIM18MPX		M18x1,5	22	41,5	27	12	80

Main features

Type	Description
KA TF	Coupling with hose adapter



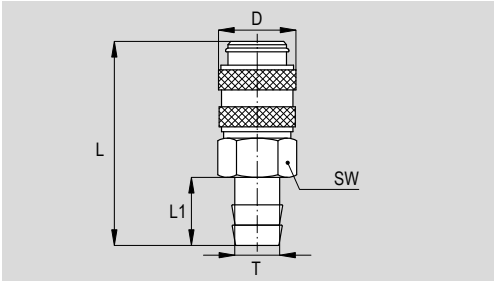

Dimensions

Code	Item	Size	T (Ø int. Tube)	SW	L	D	L1	Weight (g)
570018	20KATF03MPX	20 (DN 2,7)	3	12	35	10	13	9
570019	20KATF04MPX		4	12	35	10	13	10
570020	20KATF05MPX		5	12	35	10	13	10
570053	21KATF04MPX	21 (DN 5)	4	14	46	16	17	27
570054	21KATF06MPX		6	14	46	16	17	27
570055	21KATF08MPX		8	14	46	16	17	29
570056	21KATF09MPX		9	14	46	16	17	29
570113	26KATF06MPX	26 (DN7,2)	6	21	55	27	25	64
570114	26KATF08MPX		8	21	55	27	25	67
570115	26KATF09MPX		9	21	55	27	25	68
570116	26KATF10MPX		10	21	55	27	25	70
570117	26KATF13MPX		13	21	55	27	25	75

Main features

Type	Description
KA KO	Coupling with rapid fitting



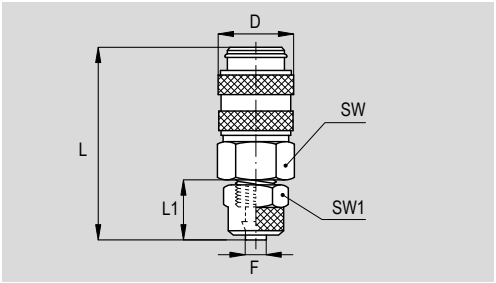

Dimensions

Code	Item	Size	T (Ø Tube)	SW	SW1	L	D	L1	Weight (g)
570021	20KAKO04MPX	20 (DN 2,7)	4x3	9	-	33	10	12	15
570022	20KAKO05MPX		5x3	9	-	33	10	12	15
570023	20KAKO06MPX		6x4	9	-	32	10	12	15
570059	21KAKO06MPX	21 (DN 5)	6x4	14	12	43	16	13	32
570060	21KAKO08MPX		8x6	14	14	43	16	13	34
570270	26KAKO06MPX	26 (DN7,2)	6x4	22	12	44	27	11	73
570121	26KAKO08MPX		8x6	22	14	44	27	13	78
570122	26KAKO10MPX		10x8	22	17	48	27	17	83
570123	26KAKO12MPX		12x9	22	17	48	27	17	85

Main features

Type	Description
KA KS	Coupling with bulkhead rapid fitting



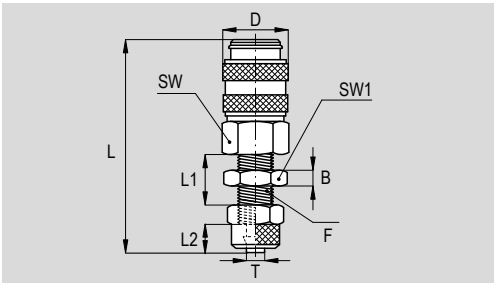

Dimensions

Code	Item	Size	T (Ø Tube)	F	B	SW	SW1	L	D	L1	L2	Weight (g)
570024	20KAKS04MPX	20 (DN 2,7)	4x3	M7x0,5	3	12	11	45	10	17	7	26
570025	20KAKS05MPX		5x3	M7x0,5	3	12	11	45	10	17	7	26
570026	20KAKS06MPX		6x4	M8x0,5	3,5	12	12	45	10	17	7	26

Main features

Type	Description
KA TS	Coupling with bulkhead hose adapter



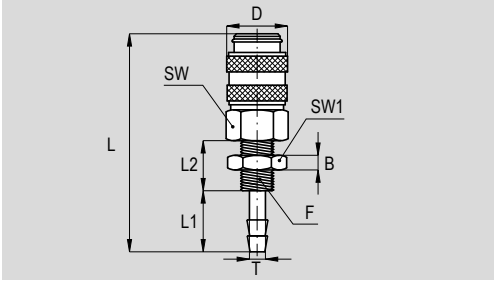

Dimensions

Code	Item	Size	T (Ø int. Tube)	F	SW	SW1	L	B	D	L1	L2	Weight (g)
570027	20KATS03MPX	20 (DN 2,7)	3	M7x0,5	12	11	51	3	10	13	17	24
570028	20KATS04MPX		4	M7x0,5	12	11	51	3	10	13	17	24
570063	21KATS04MPX	21 (DN 5)	4	M10x1	14	14	60	4	16	17	14	40
570065	21KATS06MPX		6	M12x1	17	17	60	4	16	17	14	45
572510	21KATS09MPX		9	M12x1	17	19	60	4	16	17	14	47
572378	26KATS06MPX	26 (DN7,2)	6	M12x1	22	17	62	4	27	17	14	87
572379	26KATS08MPX		8	M12x1	22	17	62	4	27	17	14	88
572380	26KATS10MPX		10	M14x1	22	19	70	4	27	25	14	90

Quick-lock couplings
Couplings series KA

Main features

Type	Description
KA KK	Coupling with rapid fitting and anti-deviation spring



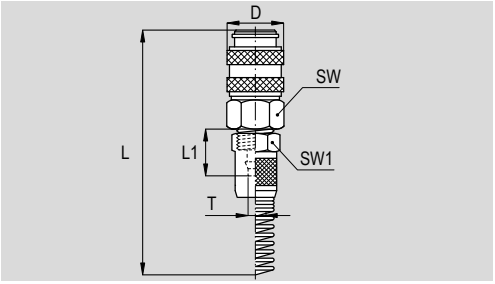

Dimensions

Code	Item	Size	T (Ø Tube)	SW	SW1	L	D	L1	Weight (g)
570067	21KAKK06MPX	21 (DN 5)	6x4	14	12	120	16	13	39
570068	21KAKK08MPX		8x6	14	14	130	16	13	44
570124	26KAKK08MPX	26 (DN7,2)	8x6	22	14	130	27	13	90
570125	26KAKK10MPX		10x8	22	19	136	27	17	120
570126	26KAKK12MPX		12x9	22	19	126	27	17	141

Main features

Type	Description
SF AM	Stem with male metric thread (DIN 13)
SF AD	Stem with male metric thread (DIN 2353, ISO 8434-1)
SF AW	Stem with BSP male thread (ISO 228)



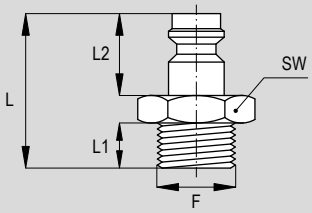

Dimensions

Code	Item	Size	F (Thread)	SW	L	L1	L2	Weight (g)
570039	20SFAM05MXX	20 (DN 2,7)	M5X0,8	7	18	5	10	3
570040	20SFAW10MXX		G1/8"	11	20	7	10	6
570088	21SFAW10MXX	21 (DN 5)	G1/8"	13	25	7	14	11
570089	21SFAW13MXX		G1/4"	17	27,5	9	14	18
570090	21SFAW17MXX		G3/8"	19	27,5	9	14	21
570091	21SFAD10MXX		M10x1	13	26	8	14	11
570092	21SFAD12MXX		M12x1,5	17	28,5	10	14	18
570093	21SFAD14MXX		M14x1,5	17	28,5	10	14	19
570147	26SFAW10MXX	26 (DN7,2)	G1/8"	13	31	7	20	17
570148	26SFAW13MXX		G1/4"	17	33	9	20	21
570149	26SFAW17MXX		G3/8"	19	33	9	20	26
570150	26SFAW21MXX		G1/2"	24	35	10	20	41
570151	26SFAD14MXX		M14x1,5	17	33	9	20	26
570152	26SFAD16MXX		M16x1,5	19	33	9	20	32
570153	26SFAD18MXX		M18x1,5	22	34	10	20	36

Main features

Type	Description
SF IM	Stem with female metric thread (DIN 13)
SF IW	Stem with BSP female thread (ISO 228)



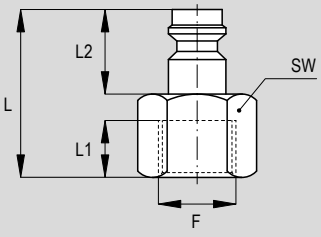

Dimensions

Code	Item	Size	F (Thread)	SW	L	L1	L2	Weight (g)
570041	20SFIM05MXX	20 (DN 2,7)	M5x0,8	7	17	5	10	3
570042	20SFIW10MXX		G1/8"	12	19	7	10	6
570094	21SFIW10MXX	21 (DN 5)	G1/8"	13	25	9	14	12
570095	21SFIW13MXX		G1/4"	17	26	10	14	18
570096	21SFIW17MXX		G3/8"	19	26,5	10,5	14	22
570097	21SFIM10MXX		M10x1	13	22,5	7	14	10
570098	21SFIM12MXX		M12x1,5	17	25	9	14	19
570099	21SFIM14MXX		M14x1,5	17	25	9	14	17
570154	26SFIW10MXX	26 (DN7,2)	G1/8"	13	31	9	20	16
570155	26SFIW13MXX		G1/4"	17	33	10	20	24
570156	26SFIW17MXX		G3/8"	19	33	10	20	23
570157	26SFIW21MXX		G1/2"	24	35	12	20	38
570158	26SFIM14MXX		M14x1,5	17	33	11	20	25
570159	26SFIM16MXX		M16x1,5	19	33	11	20	36
570160	26SFIM18MXX		M18x1,5	22	35	12	20	43

Main features

Type	Description
SF TF	Stem with hose adapter



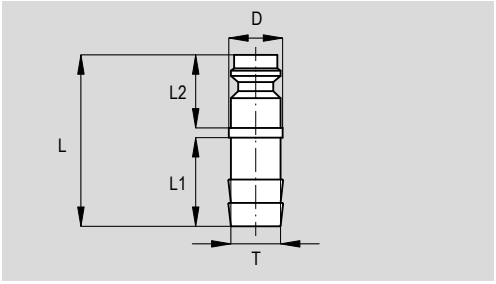

Dimensions

Code	Item	Size	T (Ø int. Tube)	L	D	L1	L2	Weight (g)
570029	20SFTF03MXX	20 (DN 2,7)	3	24	7	13	10	2
570030	20SFTF04MXX		4	24	7	13	10	3
570031	20SFTF05MXX		5	24	9	13	10	3
570069	21SFTF04MXX	21 (DN 5)	4	32	9	16,5	14	7
570070	21SFTF05MXX		5	32	12	16,5	14	8
570071	21SFTF06MXX		6	32	12	16,5	14	8
570072	21SFTF08MXX		8	32	12	16,5	14	12
570073	21SFTF09MXX		9	38	12	23	14	11
570127	26SFTF04MXX	26 (DN7,2)	4	44	12	22,5	20	10
570128	26SFTF06MXX		6	44	12	24	20	14
570129	26SFTF08MXX		8	44	12	24	20	18
570130	26SFTF09MXX		9	44	12	24	20	17
570131	26SFTF10MXX		10	44	12	23	20	19
570132	26SFTF13MXX		13	44	15	23	20	24

Main features

Type	Description
SF KO	Stem with rapid fitting



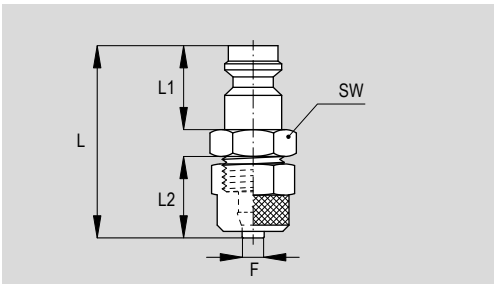

Dimensions

Code	Item	Size	T (Ø Tube)	SW	L	L1	L2	Weight (g)
570003	20SFKO04MXX	20 (DN 2,7)	4x3	8	25	10	12	12
570032	20SFKO05MXX		5x3	8	25	10	12	12
570033	20SFKO06MXX		6x4	8	25	10	12	12
570076	21SFKO06MXX	21 (DN 5)	6x4	12	32	14	12	16
570077	21SFKO08MXX		8x6	14	32	14	12	23
570136	26SFKO06MXX	26 (DN7,2)	6x4	12	34	20	13	18
570137	26SFKO08MXX		8x6	14	34	20	13	19
570138	26SFKO10MXX		10x8	17	43	20	17	38
570139	26SFKO12MXX		12x9	17	43	20	17	36

Main features

Type	Description
SF KS	Stem with bulkhead rapid fitting



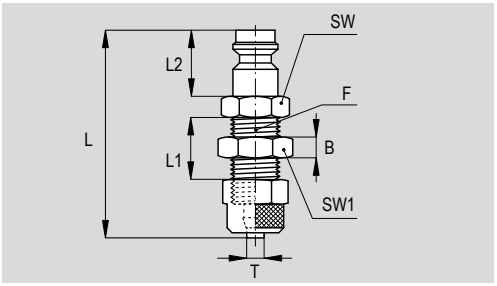

Dimensions

Code	Item	Size	T (Ø Tube)	F	B	SW	SW1	L	L1	L2	Weight (g)
570034	20SFKS04MXX	20 (DN 2,7)	4x3	M7x0,5	3	12	11	38	17	10	23
570035	20SFKS05MXX		5x3	M7x0,5	3	12	11	38	17	10	23
570036	20SFKS06MXX		6x4	M8x0,5	3,5	12	12	38	17	10	23

Main features

Type	Description
SF TS	Stem with bulkhead hose adapter



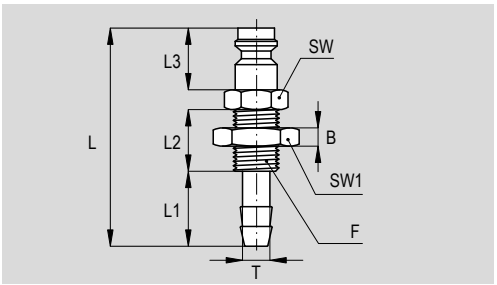

Dimensions

Code	Item	Size	T (Ø int. Tube)	F	SW	SW1	L	B	L1	L2	L3	Weight (g)
570037	20SFTS03MXX	20 (DN 2,7)	3	M7x0,5	12	11	45	3	13	17	10	21
570038	20SFTS04MXX		4	M7x0,5	12	11	45	3	13	17	10	21
570080	21SFTS04MXX	21 (DN 5)	4	M10x1	14	14	50	4	17	14	14	20
570082	21SFTS06MXX		6	M12x1	14	17	50	4	17	14	14	25
570084	21SFTS09MXX		9	M12x1	17	19	50	4	17	14	14	30
570140	26SFTS06MXX	26 (DN7,2)	6	M12x1	14	17	56	4	17	14	20	30
570141	26SFTS08MXX		8	M12x1	17	17	56	4	17	14	20	45
570142	26SFTS10MXX		10	M14x1	17	19	56	4	17	14	20	42

Quick-lock couplings
Stems series SF

Main features

Type	Description
SF KK	Stem with rapid fitting and anti-deviation spring



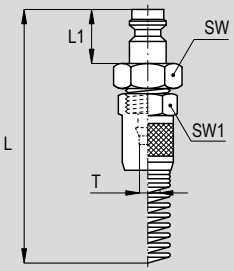

Dimensions

Code	Item	Size	T (Ø Tube)	SW	SW1	L	L1	Weight (g)
570086	21SFKK06MXX	21 (DN 5)	6x4	14	12	110	14	26
570087	21SFKK08MXX		8x6	14	14	120	14	29
570143	26SFKK06MXX	26 (DN7,2)	6x4	-	12	115	20	30
570144	26SFKK08MXX		8x6	-	14	115	20	37
570145	26SFKK10MXX		10x8	17	19	132	20	83
570146	26KAKK12MXX		12x9	17	19	132	20	86

Notes

PRESSURE
boosters



Find out our
key products

- **Solution for most applications**
- **Easy and intuitive choice**
- **Excellent value for money**
- **Wide availability**
- **Fast delivery**

Main features and certifications

Series of pressure boosters available in three sizes (1/4", 3/8" and 1/2") with manual adjustment or remote pneumatic regulation.
Pressure boosters are devices that compress air in a pneumatic system, providing an outlet flow with a higher pressure (double or quadruple, depending on the type) than the inlet pressure. These components are normally used where it is necessary to locally intensify the supply pressure on one or more applications. As they are entirely pneumatic components, they can also be used in environments where electrical devices are not recommended. They are equipped with non-return valves that allow the output pressure to be maintained even when the input pressure is removed. Thus require the disconnection of the air supply and drain the circuit before any operation on the device. To avoid fluctuations in the outlet pressure, is recommended to install an air-reservoir downstream from the pressure booster.
Supplied as standard in compliance to Reach and RoHS directives.

Type MLTR, 1/4" ÷ 1/2"

from page 4.50.10



Pressure boosters, available in size 1/4", 3/8" and 1/2", with manual adjustment, maximum inlet pressure up to 9 bar, and 2:1 pressure multiplication ratio.
For size 1/4" is available version with 4:1 pressure multiplication ratio (regulation from 2:1 to 4:1), while for size 1/2" is available version with 16 bar maximum inlet pressure (2:1 pressure multiplication ratio).



Type MLTP, 3/8" ÷ 1/2"

from page 4.50.30



Pressure boosters, available in size 3/8" and 1/2", with remote pneumatic pilot, maximum inlet pressure up to 9 bar, and 2:1 pressure multiplication ratio.



Code key*

Series	Regulation	Size	Thread	Ratio	Pressure
MLT	**R**	**2**		**A**	**09**
MLT	R = Manual pressure regulation	2 (1) = 1/4"	= Gas	A = 2:1	09 = 9 bar (max. inlet pressure)
	P = Pneumatic remote piloting	3 = 3/8"	N = NTP	B (2) = 4:1	16 (3) = 16 bar (max. inlet pressure)
		4 = 1/2"			

How to order

Series	Regulation	Size	Thread	Ratio	Pressure
MLT	**R**	**2**		**A**	**09**

Notes

*Supplied complete with inlet and outlet analogic pressure-gauges and one exhaust silencer.
(1) Available for MLTR type only;
(2) Available for 1/4" MLTR type only;
(3) Available for 1/2" MLTR type only.
For spare part kits see page 4.50.4.

Standard accessories

Tipo			Inlet pressure-gauge	Outlet pressure-gauge	Exhaust silencer
					
MLTR			•	•	•
MLTP			•	•	•

Spare part kits

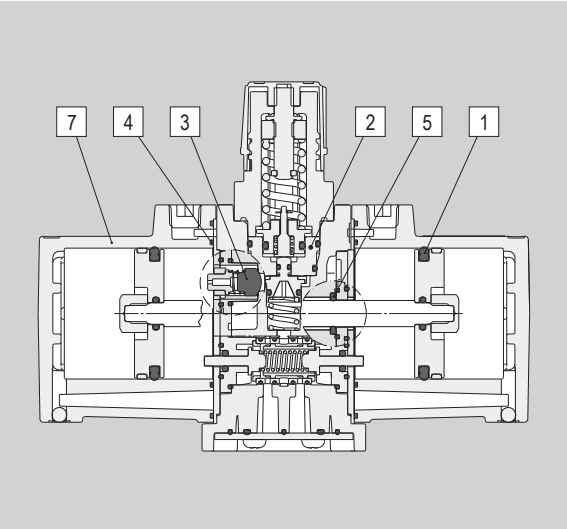

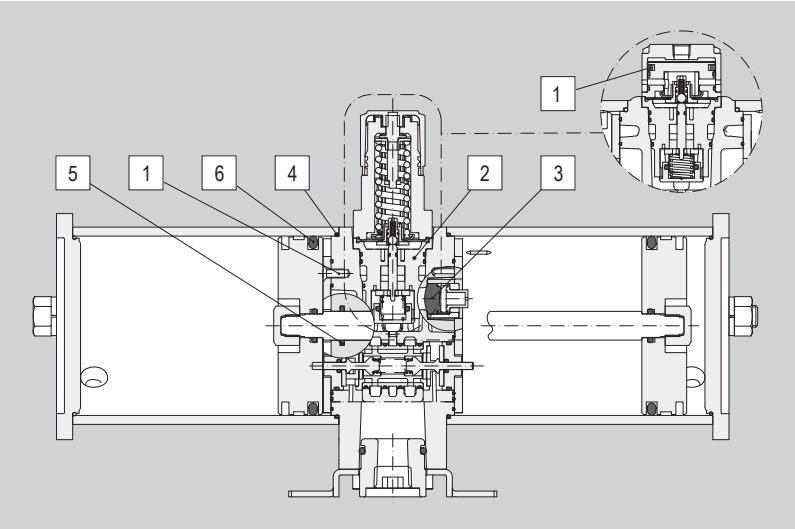

N.	Description	MLTR2A09	MLTR3A09	MLTR4A09	MLTP3A09	MLTP4A09	MLTR4A16	MLTR2B09
		Quantity						
1	Piston seal	2			2 large; 1 small		2	1 large; 1 small
2	Governor assembly	1						
3	Check valve	4						2
4	Gasket	2						
5	Rod seal	1						
6	Mounting screws	-	8	12	8	12		-
7	Cover assembly	-						1
-	Grease pack	1		2	1	2		1

Flow rate features

Type: **MLTR2A09**

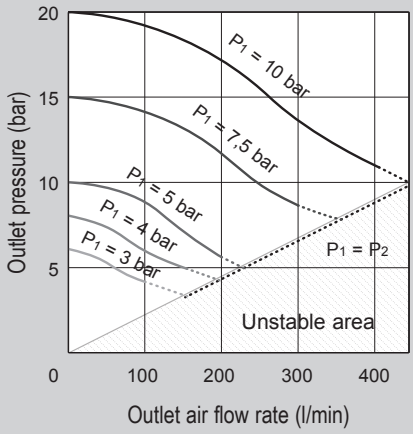

Type: **MLTR2B09**

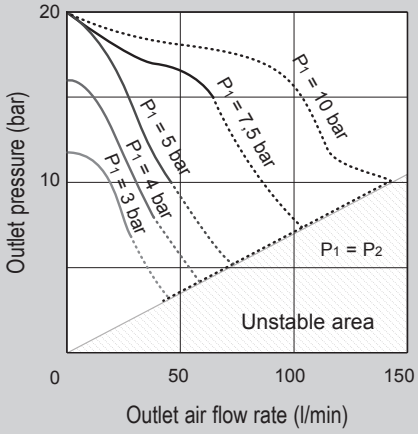

Type: **MLTR3A09**
MLTP3A09

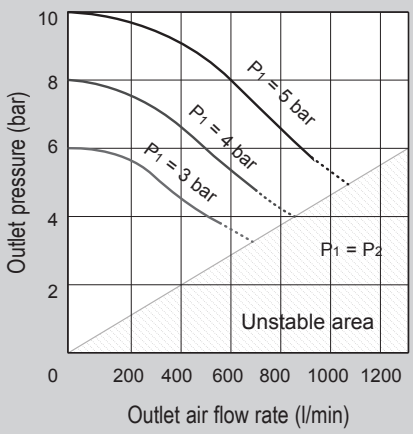

Type: **MLTR4A09**
MLTP4A09

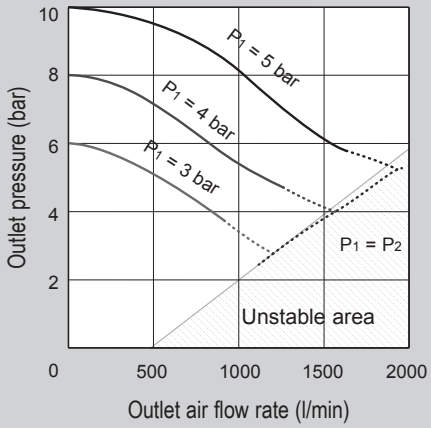

Type: **MLTR4A16**

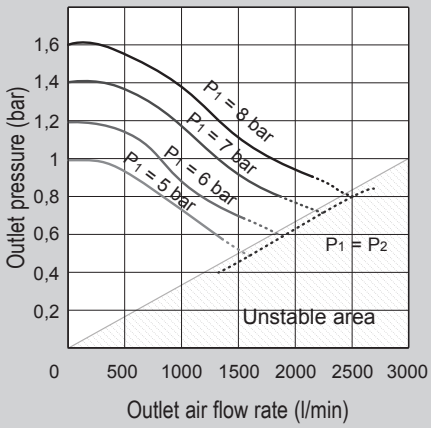

Warning: when operated at a flow rate that falls within the unstable area (P2 < P1 conditions) as shown in the graphs above, the booster regulator may not operate normally and may therefore fail to increase the pressure.

Key
Solid line = operating range; **Dotted line** = outsied of the set pressure range; **P1** = inlet pressure; **P2** = outlet pressure

Pressure features — Flow*: 10 l/min

Type: **MLTR2A09**

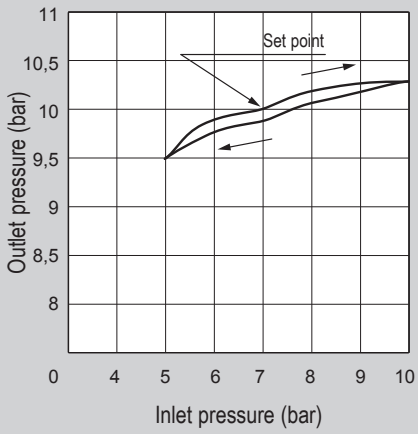

Type: **MLTR2B09**

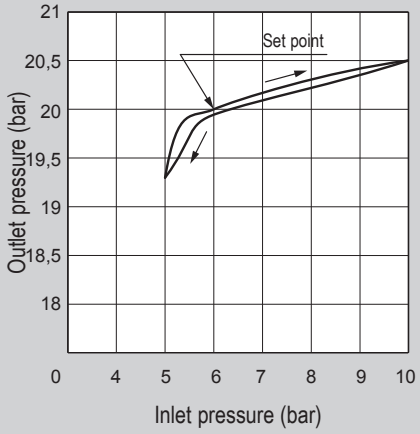

Type: **MLTR3A09**
MLTP3A09

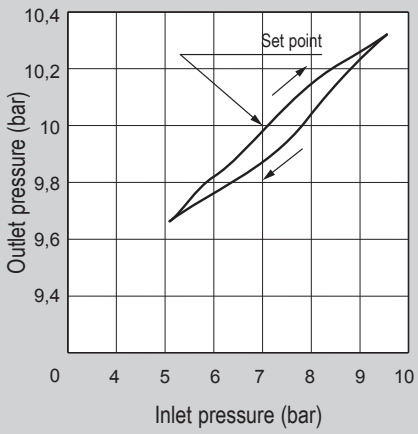

Type: **MLTR4A09**
MLTP4A09

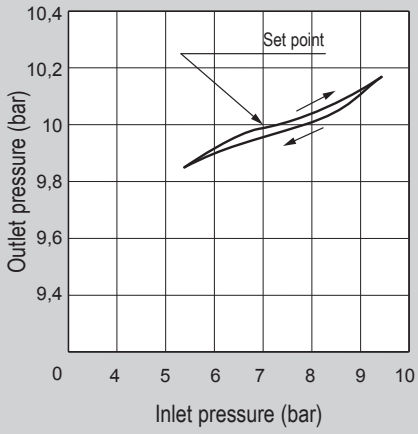

Type: **MLTR4A16**

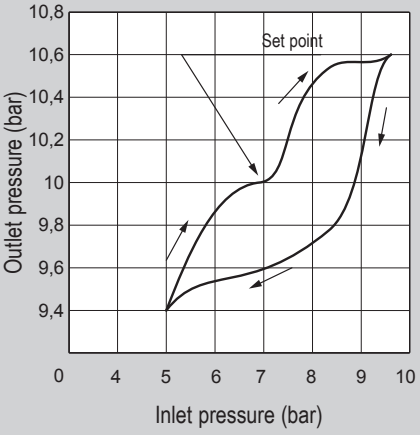

***Note:** with 7 bar inlet pressure and 10 bar outlet pressure; for type MLTR2B09 flow is 10 l/min with 6 bar inlet ressure and 20 bar outlet pressure.

Charge features — Ratio: 2:1

Type: **MLTR2A09**

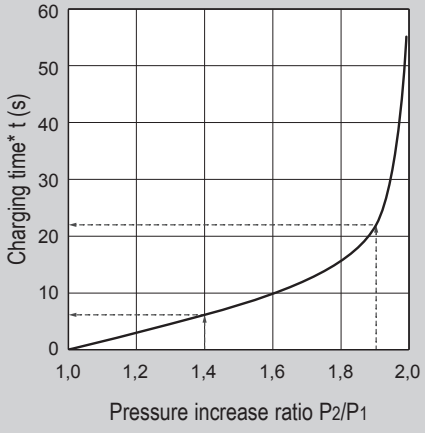

***Note:** for 10 L
Required time to charge pressure in the air-reservoir from 7 bar to 9,5 bar at 5 bar supply pressure:

$\frac{P_2}{P_1} = \frac{7}{5} = 1,4$ $\frac{P_2}{P_1} = \frac{9,5}{5} = 1,9$

With pressure increase ratio from 1,4 to 1,9, charge time of 23 – 6 = 17 s (t) is given by the table above.
Therefore, the charge time (T) for 10 L air-reservoir is:

$T = t \times \frac{V}{10} = 17 \times \frac{10}{10} = 17\ s$

Type: **MLTR2B09**

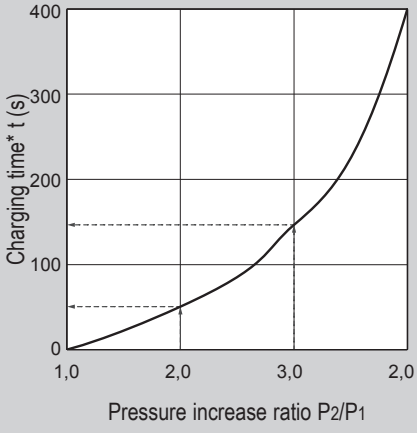

***Note:** for 10 L
Required time to charge pressure in the air-reservoir from 10 to 15 bar at 5 bar supply pressure:

$\frac{P_2}{P_1} = \frac{10}{5} = 2,0$ $\frac{P_2}{P_1} = \frac{15}{5} = 3,0$

With pressure increase ratio from 2,0 to 3,0, charge time of 147 – 58 = 89 s (t) is given by the table above.
Therefore, the charge time (T) for 10 L air-reservoir is:

$T = t \times \frac{V}{10} = 89 \times \frac{10}{10} = 89\ s$

Type: **MLTR3A09** **MLTP3A09**

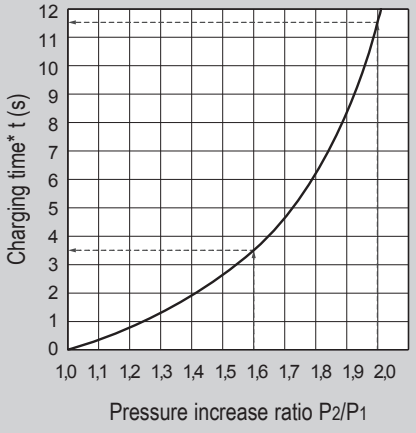

***Note:** for 10 L
Required time to charge pressure in the air-reservoir from 8 bar to 10 bar at 5 bar supply pressure:

$\frac{P_2}{P_1} = \frac{8}{5} = 1,6$ $\frac{P_2}{P_1} = \frac{10}{5} = 2,0$

With pressure increase ratio from 1,6 to 2,0, charge time of 11,5 – 3,8 = 7,7 s (t) is given by the table above.
Therefore, the charge time (T) for 10 L air-reservoir is:

$T = t \times \frac{V}{10} = 7,7 \times \frac{100}{10} = 17\ s$

Type: **MLTR4A09** **MLTP4A09**

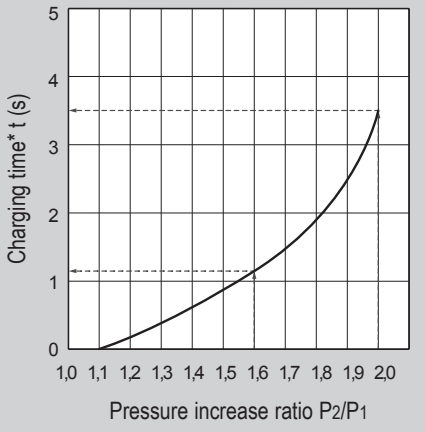

***Note:** for 10 L
Required time to charge pressure in the air-reservoir from 8 bar to 10 bar at 5 bar supply pressure:

$\frac{P_2}{P_1} = \frac{8}{5} = 1,6$ $\frac{P_2}{P_1} = \frac{10}{5} = 2,0$

With pressure increase ratio from 1,6 to 2,0, charge time of 3,5 – 1,1 = 2,4 s (t) is given by the table above.
Therefore, the charge time (T) for 10 L air-reservoir is:

$T = t \times \frac{V}{10} = 2,4 \times \frac{100}{10} = 24\ s$

Type: **MLTR4A16**

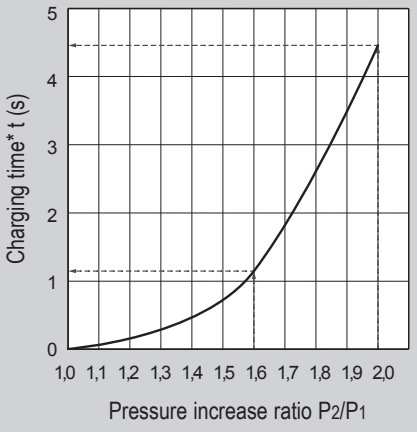

***Note:** for 10 L
Required time to charge pressure in the air-reservoir from 8 bar to 10 bar at 5 bar supply pressure:

$\frac{P_2}{P_1} = \frac{8}{5} = 1,6$ $\frac{P_2}{P_1} = \frac{10}{5} = 2,0$

With pressure increase ratio from 1,6 to 2,0, charge time of 4,3 – 1,3 = 3,2 s (t) is given by the table above.
Therefore, the charge time (T) for 10 L air-reservoir is:

$T = t \times \frac{V}{10} = 3,2 \times \frac{100}{10} = 32\ s$

Pressure boosters
Type MLTR, 1/4" - 3/8" - 1/2"

Main features

Type	Code	Item	Symbol
Manual regulation, 1/4", ratio 2:1, maximum inlet pressure 9 bar	024700	MLTR2A09	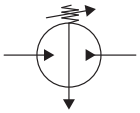
Manual regulation, 1/4", ratio 4:1, maximum inlet pressure 9 bar	024701	MLTR2B09	
Manual regulation, 3/8", ratio 2:1, maximum inlet pressure 9 bar	024702	MLTR3A09	
Manual regulation, 1/2", ratio 2:1, maximum inlet pressure 9 bar	024703	MLTR4A09	
Manual regulation, 1/2", ratio 2:1, maximum inlet pressure 16 bar	024704	MLTR4A16	



Technical data

Type	MLTR2A09	MLTR2B09	MLTR3A09	MLTR4A09	MLTR4A16
Code	024700	024701	024702	024703	024704
Size	1/4"		3/8"	1/2"	
Fluid	Compressed air				
Pressure range	1 ÷ 9 bar				1 ÷ 16 bar
Temperature range	+2°C ÷ +50°C				
Pressure multiplication ratio	2:1	4:1	2:1		
Pressure regulation	Manual				
Flow	230 l/min	70 l/min	1000 l/min	1900 l/min	1600 l/min
Installation	Horizontal				
Pressure-gauges connection	1/8"				
Exhaust silencer connection	1/4"		3/8"	1/2"	
Weight	840 g	890 g	3900 g	8600 g	8600 g

Options

MLTR2B09	MLTR4A16
	

Notes

Plastic silencer and pressure-gauges for inlet and outlet pressure detection supplied as standard, see page 4.50.3
For spare part kits see page 4.50.4

Standard dimensions

Type: **MLTR 1/4"**

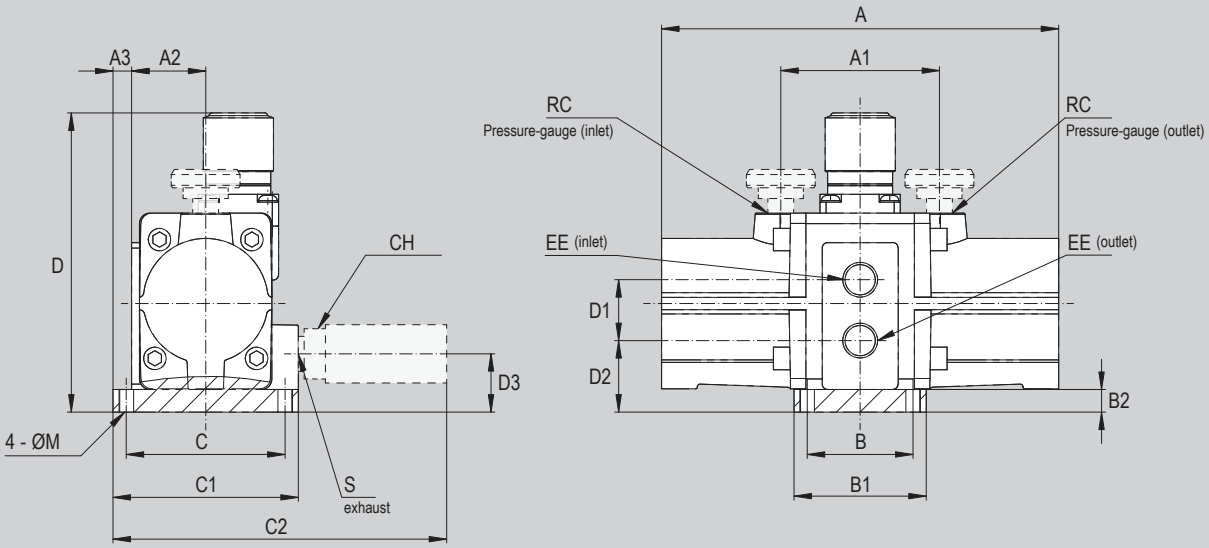

Type: **MLTR 3/8" - 1/2"**

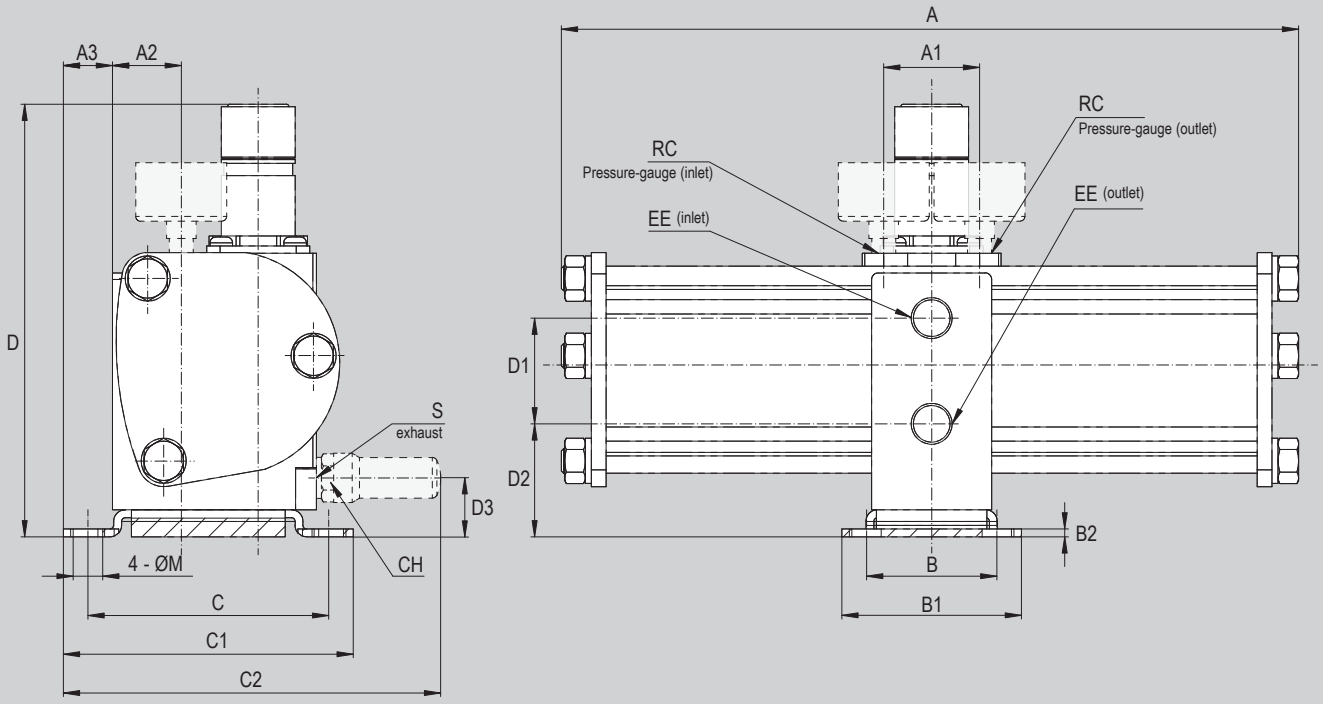

Code	Item	EE (size)	RC	A	A1	A2	A3	B	B1	B2	ØM	C	C1	C2	D	D1	D2	D3	S	CH
024700	MLTR2A09	1/4"	1/8"	150	60	28	7	40	50	8,5	5,5	60	70	126	113	23	22	27	1/4"	14
024701	MLTR2B09	1/4"	1/8"	150	60	28	7	40	50	8,5	5,5	60	70	126	113	23	22	27	1/4"	14
024702	MLTR3A09	3/8"	1/8"	300	39	28	20	53	73	3,2	12	98	118	153,5	176	43	24	46	3/8"	17
024703	MLTR4A09	1/2"	1/8"	404	40	-	-	96	116	3,2	12	130	150	200	215	62	32	62,8	1/2"	21
024704	MLTR4A16	1/2"	1/8"	404	40	-	-	96	116	3,2	12	130	150	200	215	62	32	62,8	1/2"	21

Pressure boosters
Type MLTP, 3/8" - 1/2"

Main features

Type	Code	Item	Symbol
Pneumatic piloting, 3/8", ratio 2:1, maximum inlet pressure 9 bar	024705	MLTP3A09	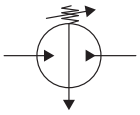
Pneumatic piloting, 1/2", ratio 2:1, maximum inlet pressure 9 bar	024706	MLTP4A09	

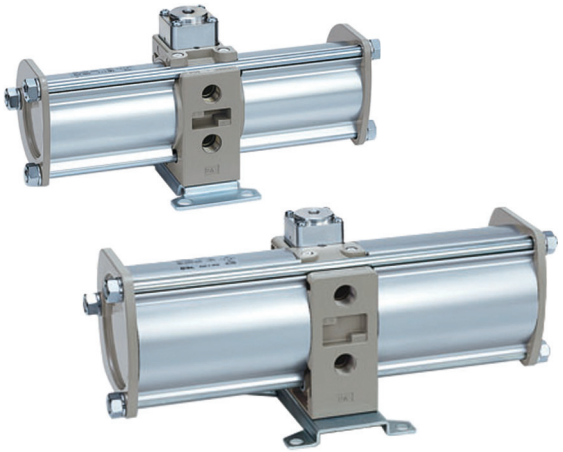

Technical data

Type	MLTP3A09	MLTP4A09
Code	024705	024706
Size	3/8"	1/2"
Fluid	Compressed air	
Pressure range	1 ÷ 9 bar	
Temperature range	+2°C ÷ +50°C	
Pressure multiplication ratio	2:1	
Pressure regulation	Pneumatic piloting	
Flow	1000 l/min	1900 l/min
Installation	Horizontal	
Pressure-gauges connection	1/8"	
Exhaust silencer connection	3/8"	1/2"
Weight	3900 g	8600 g

Notes

Plastic silencer and pressure-gauges for inlet and outlet pressure detection supplied as standard, see page 4.50.3
For spare part kits see page 4.50.4

Standard dimensions

Type: **MLTP 3/8" - 1/2"**

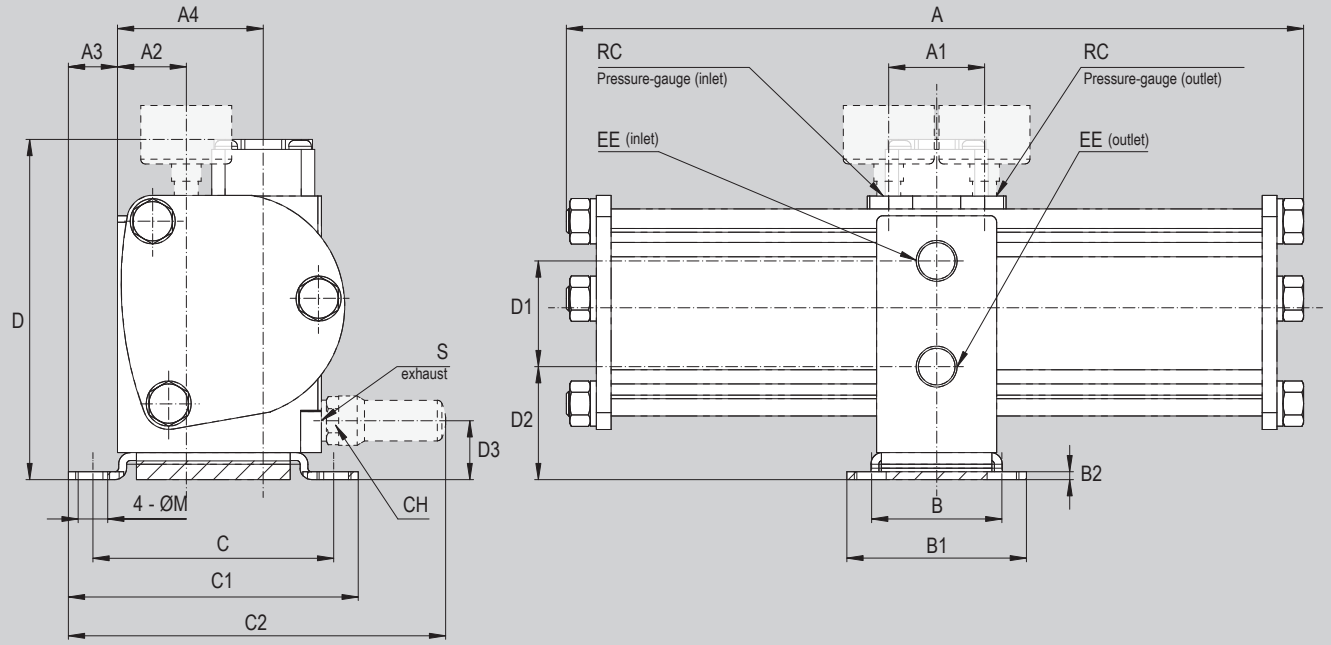

Code	Item	EE (size)	RC	A	A1	A2	A3	A4	B	B1	B2	ØM	C	C1	C2	D	D1	D2	D3	S	CH
024705	MLTP3A09	3/8"	1/8"	300	39	28	20	59	53	73	3,2	12	98	118	153,5	139	43	46	24	3/8"	17
024706	MLTP4A09	1/2"	1/8"	404	40	22	43	85	96	116	3,2	12	130	150	200	172	62	62,8	32	1/2"	21

Notes

MULTIPLE
connectors



Find out our
key products

- **Solution for most applications**
- **Easy and intuitive choice**
- **Excellent value for money**
- **Wide availability**
- **Fast delivery**

Main features and certifications

Multiple connectors available in different sizes and configurations.
Supplied as standard in compliance to Reach and RoHS directives.

Series A013P (complete connector)

from page 4.55.10



Series of multiple connectors size 1, available in different configurations (number and size of tubes), with check valve.



Series A113P (complete connector)

from page 4.55.10



Series of multiple connectors size 1, available in different configurations (number and size of tubes), without check valve.



Series A213P (complete connector)

from page 4.55.10



Series of multiple connectors size 2, available in different configurations (number and size of tubes), without check valve.



Plugs and Sockets (supplied separately)

from page 4.55.20



Series of plugs and sockets for multiple connectors size 1 and 2, supplied separately in different configurations (number and size of tubes), with or without check valve.

Code key*

Series	Type[1]	-	Tubes size[1]	-	Tubes number[1]
A	**113P**	**-**	**6**	**-**	**10**
A	013P = Size 1 with check valve 113P = Size 1 without check valve 213P = Size 2 without check valve		4 = Ø 4x2,5 6 = Ø 6x4 8 = Ø 8x6		4 = 4 6 = 6 8 = 8 10 = 10 12 = 12 14 = 14 20 = 20

How to order

Series	Type		Tubes size		Tubes N°
A	**113P**	**-**	**6**	**-**	**10**

Notes

*Connectors supplied complete of plug and socket. Plugs and sockets are also available separately, see from page 4.55.20

(1) For matching between type, tubes size and tubes number, see the table below.

For standard materials see from page 4.55.10.

Type/tube matching

Tubes number	Type	A013P..			A113P..			A213P..		
	Tube size	Ø 4x2,5	Ø 6x4	Ø 8x6	Ø 4x2,5	Ø 6x4	Ø 8x6	Ø 4x2,5	Ø 6x4	Ø 8x6
4		-	-	●	-	-	-	-	-	-
6		-	●	-	-	-	-	-	-	-
8		-	-	-	-	-	●	-	-	-
10		-	-	-	-	●	-	-	-	●
12		-	-	-	●	-	-	-	-	-
14		-	-	-	-	-	-	-	●	-
20		-	-	-	-	-	-	●	-	-

Key
● available matching; – not available matching

Multiple connectors
Complete connector

Main features

Type	Description	Symbol
A013P..	Size 1, with push-in fittings and check valve. In technopolymer.	
A113P..	Size 1, with push-in fittings, without check valve. In technopolymer.	
A213P..	Size 2, with push-in fittings, without check valve. In technopolymer.	



Function

Multiple connectors are normally used when is required to disconnect more connections quickly with only one operation.
The disconnection of tubes in the socket is with push-in fittings. Is also possible to connect a smaller number of tubes. The plug cannot be assembled in the reverse side of the socket.

Technical data

Series	A013P..		A113P..			A213P..		
Size	1					2		
Fluid	Compressed air							
Pressure range	0 ÷ 7 bar		0 ÷ 12 bar					
Temperature range	-20°C ÷ +70°C							
Ø Connections	6x4	8x6	4x2,5	6x4	8x6	4x2,5	6x4	8x6
Numbers of connections	6	4	12	10	8	20	14	10
Tubes	Calibrated Nylon (PA6), Polyurethane (PU) and Rilsan (PA11) .							
Tubes tolerance	±0,05 mm							

Standard materials

Series	A..
Body	Ixef 1022
Innest holder base	Ixef 1023
Lever	Ixef 1022
Tube guide	Nylon (PA6)
Push-in fittings	Series R (see page 4.3.1)
Seals	NBR

Standard dimensions

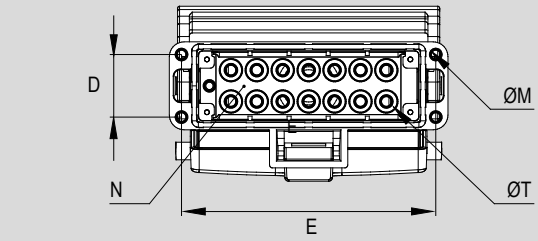

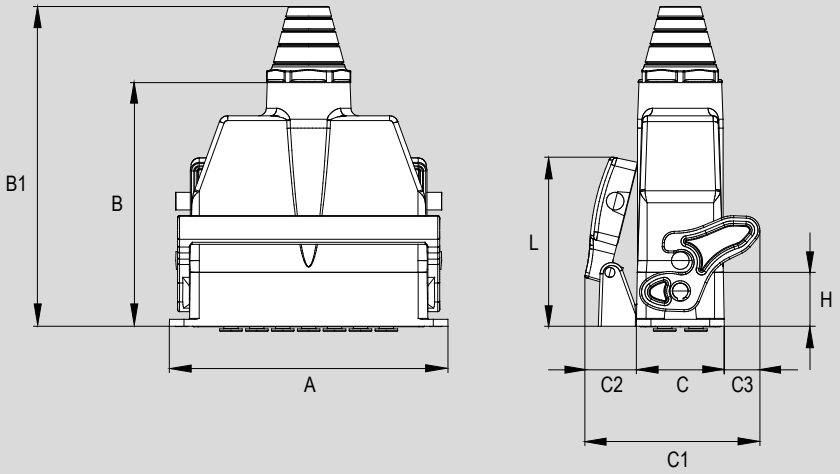

Code	Item	Symbol	T (ØTubes)	N (N°Tubes)	A	B	B1	C	C1	C2	C3	D	E	H	L	ØM	Weight (g)
025008	A013P-6-6		6x4	6	95	125	163	45	89	26	18	32	82,5	28,5	87	4,5	645
025009	A013P-8-4		8x6	4	95	125	163	45	89	26	18	32	82,5	28,5	87	4,5	594
025001	A113P-4-12		4x2,5	12	115,5	125	163	45	89	26	18	32	103	28,5	87	4,5	612
025003	A113P-6-10		6x4	10	115,5	125	163	45	89	26	18	32	103	28,5	87	4,5	719
025004	A113P-8-8		8x6	8	115,5	125	163	45	89	26	18	32	103	28,5	87	4,5	656
025021	A213P-4-20		4x2,5	20	142,5	125	163	45	89	26	18	32	130	28,5	87	4,5	828
025022	A213P-6-14		6x4	14	142,5	125	163	45	89	26	18	32	130	28,5	87	4,5	923
025033	A213P-8-10		8x6	10	142,5	125	163	45	89	26	18	32	130	28,5	87	4,5	801



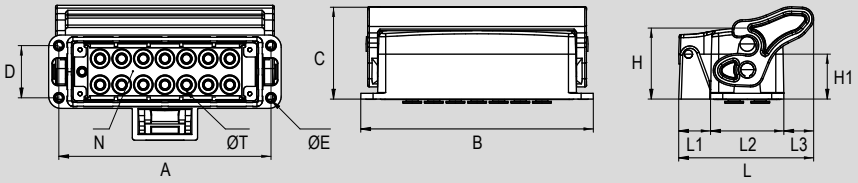

Description

Socket with cover for multiple connector, availabe in two different size and various configurations.

Dimensions

Code	Item	Symbol	T (ØTubes)	N (N°Tubes)	A	B	C	D	ØE	L	L1	L2	L3	H	H1	Weight (g)
025051	Socket for A013P-6-6		6	6	82,5	95	56	32	4,5	83	19	45	18	87	28,5	285
025052	Socket for A013P-8-4		8	4	82,5	95	56	32	4,5	83	19	45	18	87	28,5	272
025039	Socket for A113P-4-12	-	4	12	103	115	56	32	4,5	83	19	45	18	87	28,5	302
025031	Socket for A113P-6-10		6	10	103	115	56	32	4,5	83	19	45	18	87	28,5	342
025027	Socket for A113P-8-8		8	8	103	115	56	32	4,5	83	19	45	18	87	28,5	309
025041	Socket for A213P-4-20		4	20	130	142,5	56	32	4,5	83	19	45	18	87	28,5	411
025048	Socket for A213P-6-14		6	14	130	142,5	56	32	4,5	83	19	45	18	87	28,5	436
025035	Socket for A213P-8-10		8	10	130	142,5	56	32	4,5	83	19	45	18	87	28,5	369



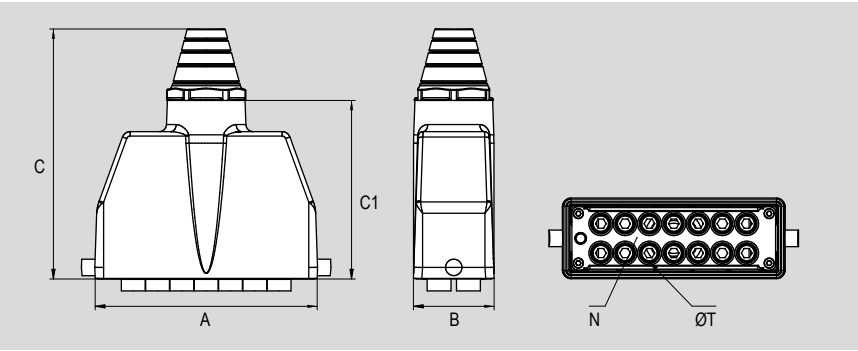

Description

Plug for multiple connector, availabe in two different size and various configurations.

Dimensions

Code	Item	Symbol	T (ØTubes)	N (N°Tubes)	A	B	C	C1	Weight (g)
025049	Plug for A013P-6-6		6	6	73	44	136	97	364
025053	Plug for A013P-8-4		8	4	73	44	136	97	330
025038	Plug for A113P-4-12	-	4	12	94	44	136	97	318
025040	Plug for A113P-6-10		6	10	94	44	136	97	339
025025	Plug for A113P-8-8		8	8	94	44	136	97	355
025037	Plug for A213P-4-20		4	20	121	44	136	97	425
025032	Plug for A213P-6-14		6	14	121	44	136	97	495
025034	Plug for A213P-8-10		8	10	121	44	136	97	432

COLLECTORS



Find out our
key products

- **Solution for most applications**
- **Easy and intuitive choice**
- **Excellent value for money**
- **Wide availability**
- **Fast delivery**

Main features and certifications

Collectors in anodized aluminium, available in different configurations, sizes and thread.
Supplied as standard in compliance to Reach and RoHS directives.

RoHS

REACH compliant

Series RX

from page 4.60.10



Series of collectors with cross outlets. Sizes from 1/8" to 1/2".

Series RY

from page 4.60.20



Series of collectors with outlets on one side.

Series RZ

from page 4.60.30



Series of collectors with outlets on both sides.

Series RR

from page 4.60.40



Series of collectors with push-in fitting outlets on one side. Sizes 1/4" and 3/8", with tube from Ø 4 to Ø 10.

Main features

Type	Description
RX	Collectors with cross outlets.



Technical data

Type	RX			
Fluid	Compressed air and other fluids			
Connections	1/8”	1/4”	3/8”	1/2”
Pressure range	Always higher than the ones used in pneumatic installations			
Parallel threads	UNI - ISO 228 / 1 (BSP)			

Standard materials

Type	RX
Body	Anodized aluminium

Dimensions

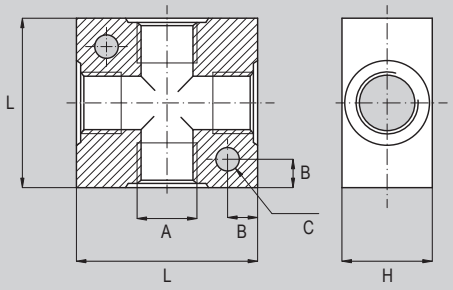

Code	Item	A	L	B	C	H	Weight (g)
024501	RX8	G1/8”	25	4	4,5	16	-
024502	RX4	G1/4”	40	7	5,5	20	-
024503	RX3	G3/8”	40	7	5,5	25	-
024504	RX2	G1/2”	50	8	5,5	30	-

Main features

Type	Description
RY	Collectors with outlets on one side.



Technical data

Type	RY								
Fluid	Compressed air and other fluids								
Connections (inlet)	1/4”					3/8”			
Connections (outlet)	1/8”					1/4”			
Side outlets number	2	3	4	5	6	3	4	5	6
Pressure range	Always higher than the ones used in pneumatic installations								
Parallel threads	UNI - ISO 228 / 1 (BSP)								

Standard materials

Type	RY
Body	Anodized aluminium

Dimensions

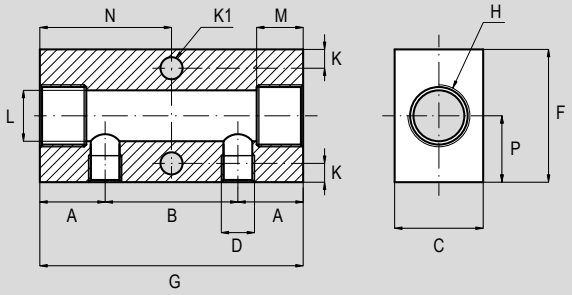

Code	Item	N° side outlets	A	B	C	D	F	G	H	K	K1	L	M	N	P	Weight (g)
024529	RY9	2	15	30	20	G1/8”	30	60	G1/4”	6	6,5	10	9,5	30	15	-

Dimensions

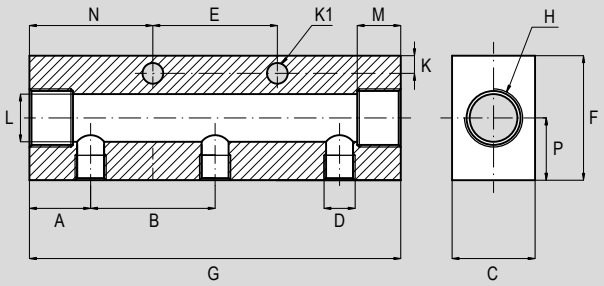

Code	Item	N° side outlets	A	B	C	D	E	F	G	H	K	K1	L	M	N	P	Weight (g)
024521	RY1	3	15	30	20	G1/8”	30	30	90	G1/4”	5	5,5	10	9,5	30	15	-
024522	RY2	4	15	30	20	G1/8”	60	30	120	G1/4”	5	5,5	10	9,5	30	15	-
024523	RY3	5	15	30	20	G1/8”	90	30	150	G1/4”	5	5,5	10	9,5	30	15	-
024524	RY4	6	15	30	20	G1/8”	120	30	180	G1/4”	5	5,5	10	9,5	30	15	-

Dimensions

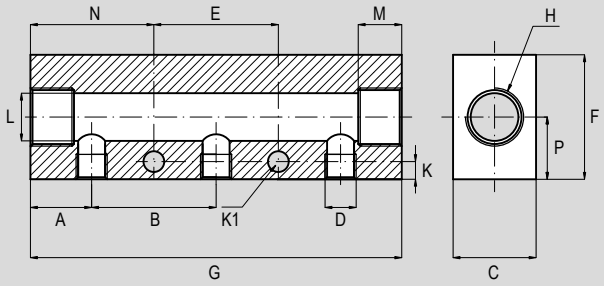

Code	Item	N° side outlets	A	B	C	D	E	F	G	H	K	K1	L	M	N	P	Weight (g)
024525	RY5	3	18	36	20	G1/4”	36	30	108	G3/8”	6	6,5	12	10,5	36	19	-
024526	RY6	4	18	36	20	G1/4”	72	30	144	G3/8”	6	6,5	12	10,5	36	19	-
024527	RY7	5	18	36	20	G1/4”	108	30	180	G3/8”	6	6,5	12	10,5	36	19	-
024528	RY8	6	18	36	20	G1/4”	144	30	216	G3/8”	6	6,5	12	10,5	36	19	-

Main features

Type	Description
RZ	Collectors with outlets on both sides.



Technical data

Type	RZ							
Fluid	Compressed air and other fluids							
Connections (inlet)	1/4”				3/8”			
Connections (outlet)	1/8”				1/4”			
Side outlets number	2+2	3+3	4+4	5+5	2+2	3+3	4+4	5+5
Pressure range	Always higher than the ones used in pneumatic installations							
Parallel threads	UNI - ISO 228 / 1 (BSP)							

Standard materials

Type	RZ
Body	Anodized aluminium

Dimensions

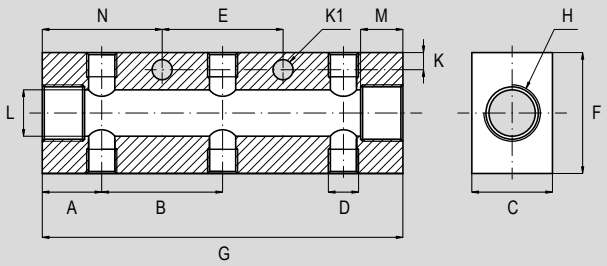

Code	Item	N° side outlets	A	B	C	D	E	F	G	H	K	K1	L	M	N	Weight (g)
024551	RZ1	2+2	16	30	20	G1/8”	0	30	62	G1/4”	6	6,5	10	9,5	31	-
024552	RZ2	3+3	15	30	20	G1/8”	30	30	90	G1/4”	5	5,5	10	9,5	30	-
024553	RZ3	4+4	15	30	20	G1/8”	60	30	120	G1/4”	5	5,5	10	9,5	30	-
024554	RZ4	5+5	15	30	20	G1/8”	90	30	150	G1/4”	5	5,5	10	9,5	30	-
024555	RZ5	2+2	18	36	20	G1/4”	28	40	72	G3/8”	6	6,5	12	10,5	36	-
024556	RZ6	3+3	18	36	20	G1/4”	36	40	108	G3/8”	6	6,5	12	10,5	36	-
024557	RZ7	4+4	18	36	20	G1/4”	72	40	144	G3/8”	6	6,5	12	10,5	36	-
024558	RZ8	5+5	18	36	20	G1/4”	108	40	180	G3/8”	6	6,5	12	10,5	36	-

Main features

Type	Description
RR	Collectors with push-in fitting outlets on one side.



Technical data

Type	RR		
Fluid	Compressed air and other fluids		
Connections (inlet)	1/4”		3/8”
Connections (outlet)	Ø 4	Ø 6	Ø 8
Side outlets number	6	5	4
Pressure range	0 ÷ 12 bar		
Parallel threads	UNI - ISO 228 / 1 (BSP)		
Tubes	Calibrated Nylon (PA6), Polyurethane (PU) and Rilsan (PA11) .		
Tubes tolerance	±0,05 mm		

Standard materials

Type	RR
Body	Anodized aluminium
Push-in fitting connections	Acetalic resin (POM)

Dimensions

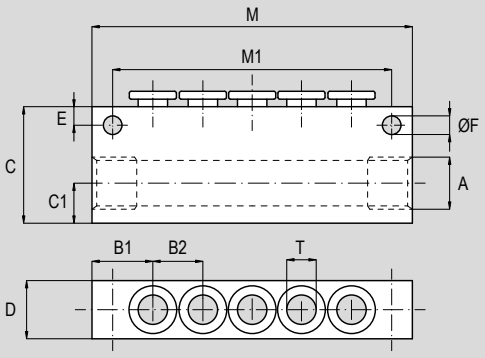

Code	Item	N° side outlets	A	T (ØTube)	B1	B2	C	C1	D	E	ØF	M	M1	Weight (g)
024570	RR46	6	G1/4”	4	14	11	30	10	20	5	4,5	83	73	111,7
024571	RR65	5	G1/4”	6	15,5	13	30	10	20	5	4,5	83	73	104,1
024572	RR84	4	G3/8”	8	17,5	16	30	10	20	5	4,5	83	73	99,3

Notes

TUBES

tube cutters, blow guns, washers

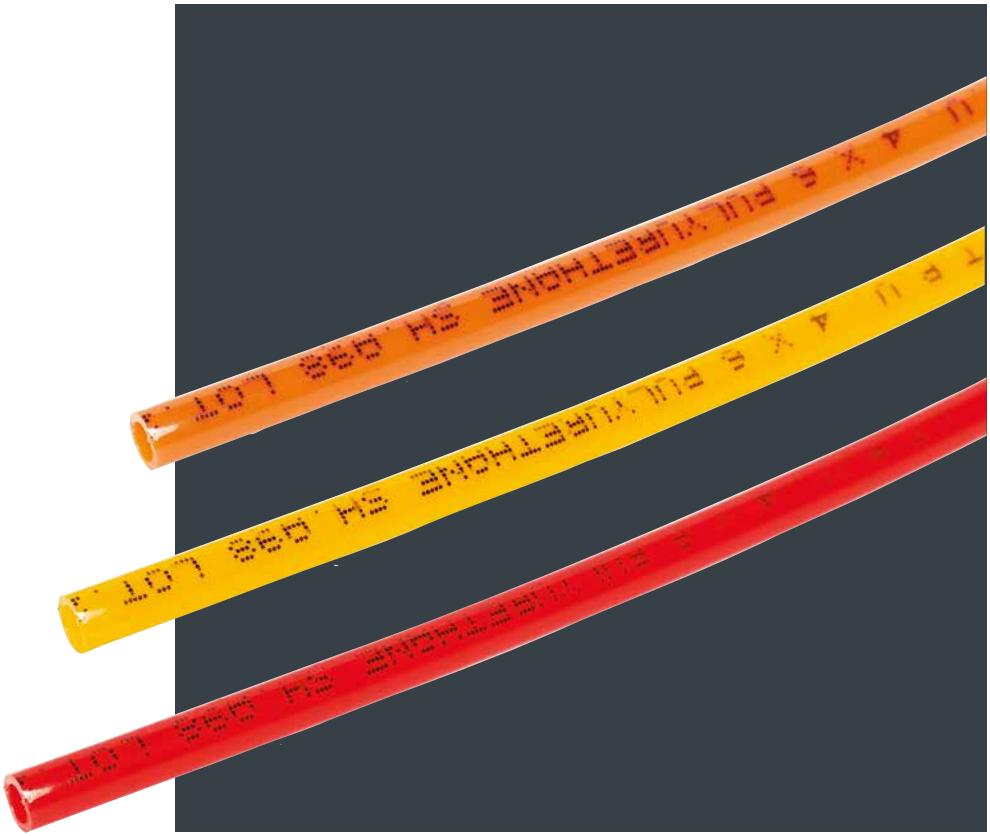

Find out our
key products

- **Solution for most applications**
- **Easy and intuitive choice**
- **Excellent value for money**
- **Wide availability**
- **Fast delivery**

Main features and certifications

Tubes ed accessories for pneumatic systems.
Supplied as standard in compliance to Reach and RoHS directives.

DIN 73378 DIN 74324 RoHS REACH compliant

Flexible linear tubes and spirals

from page 4.65.10



Series of flexible linear tubes and spirals for pneumatic systems, available in different materials, sizes and colors, according to application and fitting need. Multi-tube version, linear or spiral, available on request.

Spatter resistant tubes

from page 4.65.20



Series of single and double layer spatter resistant tubes, designed for welding.

Tube cutters

from page 4.65.50



Series of tube cutters and tube peeling in different materials, sizes and colors. Replacing blades available.

Blow guns

from page 4.65.70



Series of bow guns for compressed air, industrial use, in different materials and configurations.

Washers

from page 4.65.90



Series of washers for parallel (BSP) male threads, for tigthening on female thread, in different materials and sizes. Special sizes available on request.



Code key

Type(1)	Diameter(1)	Color(1)
TR	**8X6**	**NE**

TR =	Linear in Rilsan (PA12)
SR =	Spiral without straight terminals in Rilsan (PA11)
TPU =	Linear in Polyurethane (PU)
SPU =	Spiral with straight terminals in Polyurethane (PU)
TP =	Linear in Polyethylene (PE)
TN =	Linear in Nylon (PA6)
TT =	Linear in PTFE

4x2 = Ø 4x2 mm
4x2,5 = Ø 4x2,5 mm
4x2,7 = Ø 4x2,7 mm
5x3 = Ø 5x3 mm
6x4 = Ø 6x4 mm
8x5,5 = Ø 8x5,5 mm
8x6 = Ø 8x6 mm
10x6,5 = Ø 10x6,5 mm
10x8 = Ø 10x8 mm
12x8 = Ø 12x8 mm
12x9 = Ø 12x9 mm
12x10 = Ø 12x10 mm
14x10 = Ø 14x10 mm
14x12 = Ø 14x12 mm
15x12 = Ø 15x12 mm
15x12,5 = Ø 15x12,5 mm
16x14 = Ø 16x14 mm

NT = Neutral
AZ = Azure
NE = Black

How to order

Series	Size	Color
TR	**8X6**	**NE**

Notes

The options in the same grind are alternative to each others. For standard materials see page 4.65.13.

(1) For matching between tube type, diameter and color, see tables from page 4.65.11

Different tube types, sizes and colors available on request.

Type / diameter matching

Diameter mm	Type							Data sheet and code page
	TR	SR	TPU	SPU	TP	TN	TT	
Ø 4x2	●	●	●	-	●	●	●	
Ø 4x2,5	●	●	●	-	●	●	●	
Ø 4x2,7	●	-	-	-	-	-	-	
Ø 5x3	●	-	●	-	●	●	●	
Ø 6x4	●	●	●	●	●	●	●	
Ø 8x5,5	-	-	●	●	-	-	-	
Ø 8x6	●	●	●	-	●	●	●	
Ø 10x6,5	-	-	●	●	-	-	-	
Ø 10x8	●	●	●	-	●	●	●	4.65.13
Ø 12x8	-	-	●	●	-	-	-	
Ø 12x9	-	-	●	-	-	-	●	
Ø 12x10	●	●	-	-	●	●	●	
Ø 14x10	-	-	●	-	●	-	●	
Ø 14x12	●	-	-	-	-	●	●	
Ø 15x12	●	-	-	-	●	●	-	
Ø 15x12,5	-	-	-	-	-	-	●	
Ø 16x14	●	-	-	-	-	●	-	

Key
● available matching; - not available matching

Type / color matching

Color		Type								
		TR		SR	TPU	SPU	TP	TN		TT
		Øe4÷Øe12	Øe14÷Øe16	Øe4÷Øe14	Øe4÷Øe14	Øe4÷Øe12	Øe4÷Øe15	Øe4÷Øe12	Øe14÷Øe16	Øe4÷Øe15
NT	Neutral	●	●	-	●	-	●	●	●	●
AZ	 Azure	●	-	●	●	●	-	-	-	-
NE	 Black	●	●	-	●	-	●	●	-	-

Key
● available matching; – not available matching

Other colors

In addition to the standard colors in the table above, the colors below are available on request. For possible color matching with tube types and sizes, please contact the sales department.
For bulk quantities, are also available additional colors, always depending on the possibility of matching with the chosen tube type and size.

RO	 Red		GI	 Yellow		VE	 Green		VI	 Purple
BL	 Blue		AR	 Orange		GR	 Grey		TR	 Transparent

Technical data

Type		TR..	SR..	TPU..	SPU..	TP..	TN..	TT..
Material		Rilsan (PA12)	Rilsan (PA11)	Polyurethane (PU)		Polyethylene (PE)	Nylon (PA6)	PTFE
Version		Linear	Spiral (without straight terminals)	Linear	Spiral (with straight terminals)	Linear		
Fluid		Compressed air						
Temperature range		-40°C ÷ +80°C		-40°C ÷ +60°C		-10°C ÷ +60°C	-10°C ÷ +80°C	-60°C ÷ +260°C
Tolerances	Ø ≤ 10 mm	±0,05		±0,07		±0,05		±0,16
	Ø ≥ 12 mm	±0,1						±0,30
Pressure range at 20°C	Ø 4x2	0 ÷ 44 bar		0 ÷ 22 bar	-	0 ÷ 21 bar	0 ÷ 55 bar	0 ÷ 25 bar
	Ø 4x2,5	0 ÷ 30 bar		0 ÷ 15 bar		0 ÷ 14 bar	0 ÷ 38 bar	0 ÷ 17 bar
	Ø 4x2,7	0 ÷ 25 bar	-					
	Ø 5x3	0 ÷ 33 bar	-	0 ÷ 16 bar	-	0 ÷ 15 bar	0 ÷ 41 bar	0 ÷ 19 bar
	Ø 6x4	0 ÷ 26 bar		0 ÷ 13 bar		0 ÷ 12 bar	0 ÷ 33 bar	0 ÷ 15 bar
	Ø 8x5,5	-		0 ÷ 12 bar		-		
	Ø 8x6	0 ÷ 19 bar		0 ÷ 11 bar	-	0 ÷ 9 bar	0 ÷ 23 bar	0 ÷ 10 bar
	Ø 10x6,5	-		0 ÷ 14 bar		-		
	Ø 10x8	0 ÷ 14 bar		0 ÷ 8 bar	-	0 ÷ 7 bar	0 ÷ 18 bar	0 ÷ 8 bar
	Ø 12x8	-		0 ÷ 13 bar		-		
	Ø 12x9	-		0 ÷ 9 bar	-			0 ÷ 10 bar
	Ø 12x10	0 ÷ 12 bar		-		0 ÷ 5 bar	0 ÷ 15 bar	0 ÷ 6 bar
	Ø 14x10	-		0 ÷ 11 bar		0 ÷ 10 bar	-	
	Ø 14x12	0 ÷ 10 bar	-				0 ÷ 12 bar	0 ÷ 5 bar
	Ø 15x12	0 ÷ 14 bar	-			0 ÷ 7 bar	0 ÷ 18 bar	-
	Ø 15x12,5	-						0 ÷ 6 bar
	Ø 16x14	0 ÷ 8 bar	-				0 ÷ 11 bar	-
Rolls	Ø 4÷10	100 mt.		100 mt.		100 mt.	100 mt.	100 mt.
	Ø 12	50 mt.		100 mt.		100 mt.	100 mt.	100 mt.
	Ø 14÷16	50 mt.		100 mt.		100 mt.	50 mt.	100 mt.

Main features

Series	Description	Diameter mm	Code	Item
FS	Single layer spatter resistant tubes	Ø 4x2,5	841001	FS4x2,5NE
		Ø 6x4	841011	FS6x4NE
		Ø 8x5,5	841021	FS8x5,5NE
		Ø 10x7	841031	FS10x7NE
		Ø 12x8,5	841041	FS12x8,5NE



Technical data

Type		FS				
Size		Ø 4x2,5	Ø 6x4	Ø 8x5,5	Ø 10x7	Ø 12x8,5
Fluid		Compressed air, water, oil				
Temperature range	Air	-40°C ÷ +100°C				
	Water	0°C ÷ +70°C				
	Oil	-40°C ÷ +80°C				
Pressure range		0 ÷ 10 bar		0 ÷ 9 bar		
Rolls		100 mt.				

Notes

Cap series CP (to be ordered separately, see the data sheet below) are required as protection to prevent welding slag from settling between fitting and tube.
Fittings series R are reccomended, see page 4.3.1.

Main features

Series	Description
CP	Cap for spatter resistant tubes seires FS



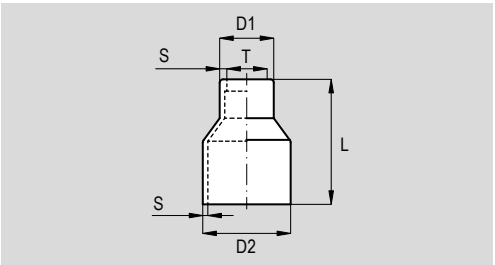

Dimensions

Code	Item	T (ØTube)	L	D1	D2	S	Weight (g)
841095	CP4	4	20	4,5	9,5	1,2	-
841096	CP6	6	24	6	12,3	1,2	-
841097	CP8	8	26	8	14,3	1,2	-
841098	CP10	10	30	10	17,3	1,2	-
841099	CP12	12	31	12	19,8	1,2	-

Main features

Series	Description	Diameter mm	Code	Item
FW	Double layer spatter resistant tubes	Ø 6x4	841101	FW6x4NE
		Ø 8x4	841102	FW8x6NE
		Ø 10x7,5	841103	FW10x7,5NE
		Ø 12x9	841104	FW12x9NE



Technical data

Type		FW			
Size		Ø 6x4	Ø 8x6	Ø 10x7,5	Ø 12x9
Fluid		Compressed air, water, oil			
Temperature range	Air	-40°C ÷ +100°C			
	Water	0°C ÷ +70°C			
	Oil	-40°C ÷ +80°C			
Pressure range		0 ÷ 10 bar	0 ÷ 8 bar		
Cover thickness		1 mm			
Compliance	internal tube	V-2 UL94			
	external tube	V-0 UL94			
Rolls		100 mt.			50 mt.

Notes

The external layer have to be removed using the peeler type TSC, see page 4.65.50.
Cap series CPFW (to be ordered separately, see the data sheet below) are required as protection to prevent welding slag from settling between fitting and tube.
Fittings series R are reccomended, see page 4.3.1.

Main features

Series	Description
CPFW	Cap for spatter resistant tubes seires FW



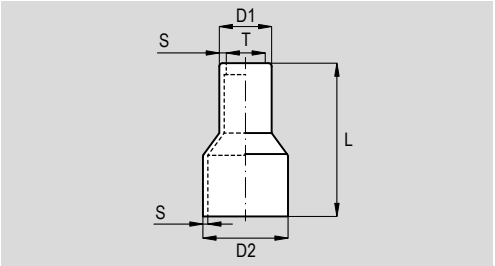

Dimensions

Code	Item	T (ØTube)	L	D1	D2	S	Weight (g)
844961	CPFW6	6	32	8	12,3	1,2	-
844962	CPFW8	8	34	10	14,3	1,2	-
844963	CPFW10	10	40	12	17,3	1,2	-
844964	CPFW12	12	41	14	19,8	1,2	-

Main features

Type	Description
PTPNE	Black plastic tube cutter for tubes



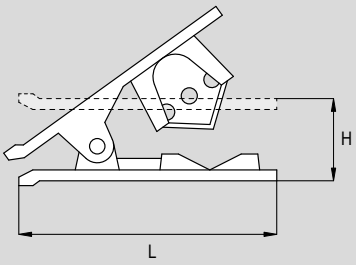

Technical data

Type	PTPNE
Color*	Black
Tube type	Rilsan, polyurethane, polyethylene, nylon
Tube Ø	Ø 2 mm ÷ Ø 12 mm
Body material	Acetalic resin (POM)
Blade material**	Stainless Steel

*On request, for bulk quantities, available in different colors or customized.
**For replacement blades see the table below.

Dimensions

Code	Item	L	H	Weight (g)
022911	PTPNE	81	27	-

Spare parts

Code	Item	Description	Matching	Material
022910	LPTP	Replacing blades for tube cutter	PTP..	Stainless Steel

Main features

Type	Description
PTM..	Metal tube cutter for tubes



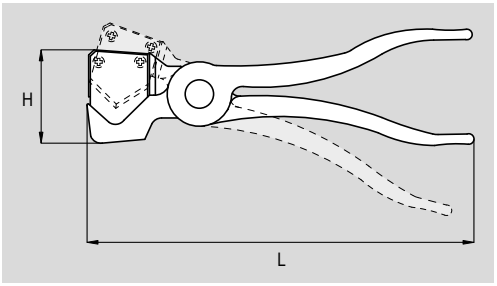

Technical data

Type	PTM12	PTM25
Tube type	Rilsan, polyurethane, polyethylene, nylon	
Tube Ø	Ø 2 mm ÷ Ø 12 mm	Ø 2 mm ÷ Ø 25 mm
Body material	Chrome-plated steel	
Blade material*	Steel	

*For replacement blades see the table below

Dimensions

Code	Item	L	H	Weight (g)
022981	PTM12	130	30	-
022982	PTM25	185	46	-

Spare parts

Code	Item	Description	Matching	Material
022991	LPTM12	Replacing blades for tube cutter	PTM12	Steel
022991	LPTM25	Replacing blades for tube cutter	PTM25	Steel

Main features

Type	Description
TSC..	Peeler for double layers spatter resistant tubes



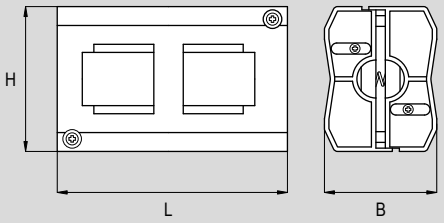

Technical data

Type	TSC8-6	TSC10-12
Color	Black	
Tube type	Series FW	
Tube Ø	Ø 6 mm ÷ Ø 8 mm	Ø 10 mm ÷ Ø 12 mm
Body material	Acetalic resin (POM)	
Blade material	Stainless Steel	

Dimensions

Code	Item	L	H	B	Weight (g)
750010	TSC8-6	75	49	39	-
750011	TSC10-12	75	49	39	-

Main features

Description	Code	Item
Metal blow gun. For compressed air, industrial use.	572384	AH13



Technical data

Type	AH13
Fluid	Compressed air
Pressure range	0 ÷ 10 bar
Temperature range	-10°C ÷ +60°C
Connection	1/4" (female)

Standard materials

Type	AH13
Body	Die-cast zamak
Nozzle	Die-cast zamak
Seals	NBR

Main features

Description	Code	Item
Plastic blow gun with short nozzle. For compressed air, industrial use.	570167	AN13



Technical data

Type	AN13
Fluid	Compressed air
Pressure range	0 ÷ 10 bar
Temperature range	-10°C ÷ +60°C
Connection	1/4" (female)

Standard materials

Type	AN13
Body	Acetalic resin (POM)
Nozzle	Brass
Seals	NBR

Main features

Description	Code	Item
Plastic blow gun with extension tube. For compressed air, industrial use.	570166	AK13



Technical data

Type	AK13
Fluid	Compressed air
Pressure range	0 ÷ 10 bar
Temperature range	-10°C ÷ +60°C
Connection	1/4" (female)

Standard materials

Type	AK13
Body	Acetalic resin (POM)
Nozzle	Brass
Seals	NBR

Main features

Description	Code	Item
Plastic blow gun with interchangeable nozzles (to be ordered separately, see table below). For compressed air, industrial use.	570168	AM13



Technical data

Type	AM13
Fluid	Compressed air
Pressure range	0 ÷ 10 bar
Temperature range	-10°C ÷ +60°C
Connection	1/4" (female)

Standard materials

Type	AM13
Body	Acetalic resin
Nozzle	See table below
Seals	NBR

Nozzles

Type	Code	Item	Description	Materials
	AR12	570169	Silenced nozzle, noise reduced up to 63 dB.	Aluminium
	AT12	570170	Venturi Nozzle, energy saving use 2/3 of the surrounding air for better wide-range blowing.	Acetalic resin (POM)
	VR12	570171	150 mm. extended tube nozzle	Nickel-plated brass
	SD12	570172	Safety nozzle, during blowing create a protective shield against chips.	Nickel-plated brass

Main features

Type	Description
RA	Washer for parallel (BSP) male threads, for tigthening on female thread. In aluminium.



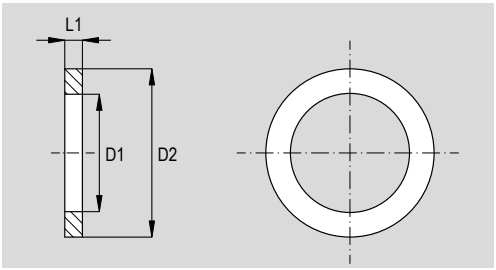

Dimensions*

Code	Item	For thread	D1 (Ø external)	D2 (Ø internal)	L1 (thickness)	Weight (g)
022630	7RA	M5	8,5	5	1	-
022621	1RA	G1/8”	14	10	1	-
022622	2RA	G1/4”	17,5	13	1,5	-
022623	3RA	G3/8”	22	17	1,5	-
022624	4RA	G1/2”	27	21	1,5	-
022625	5RA	G3/4”	32	27	1,5	-
022626	6RA	G1”	39	33	1,5	-
022628	12RA	G1 1/4”	50	42	1,5	-

*On request available with special dimensions. Please contact the sales department.

Main features

Type	Description
RN	Washer for parallel (BSP) male threads, for tigthening on female thread. In Nylon (PA6).



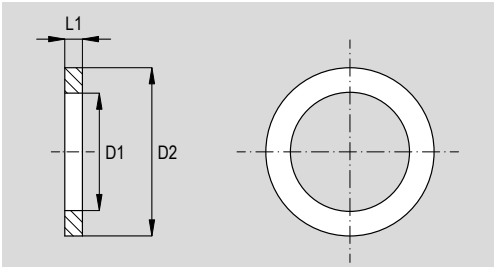

Dimensions*

Code	Item	For thread	D1 (Ø external)	D2 (Ø internal)	L1 (thickness)	Weight (g)
022670	7RN	M5	8,5	5	1	-
022661	1RN	G1/8”	14	10	1	-
022662	2RN	G1/4”	18	13	1,5	-
022663	3RN	G3/8”	22	17	1,5	-
022664	4RN	G1/2”	27	21	1,5	-
022665	5RN	G3/4”	32	27	1,5	-
022666	6RN	G1”	39	33	1,5	-

*On request available with special dimensions. Please contact the sales department.

Main features

Type	Description
RR	Washer for parallel (BSP) male threads, for tigthening on female thread. In copper.



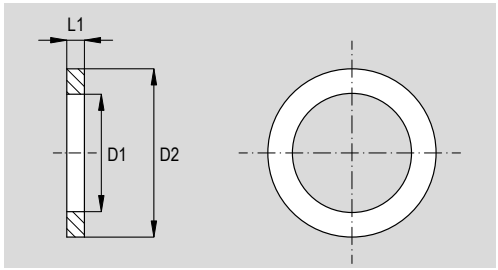

Dimensions*

Code	Item	For thread	D1 (Ø external)	D2 (Ø internal)	L1 (thickness)	Weight (g)
022650	7RR	M5	8,5	5	1	-
022641	1RR	G1/8”	14	10	1	-
022642	2RR	G1/4”	17,5	13	1,5	-
022643	3RR	G3/8”	22	17	1,5	-
022644	4RR	G1/2”	27	21	1,5	-
022645	5RR	G3/4”	32	27	1,5	-
022646	6RR	G1”	39	33	1,5	-
022647	14RR	G1 1/4”	50	42	1,5	-
022648	12RR	G1 1/2”	55	48	1,5	-
022649	20RR	G2”	70	60	1,5	-

*On request available with special dimensions. Please contact the sales department.

Main features

Type	Description
RF	Washer for parallel (BSP) male threads, for tigthening on female thread. In fibra.



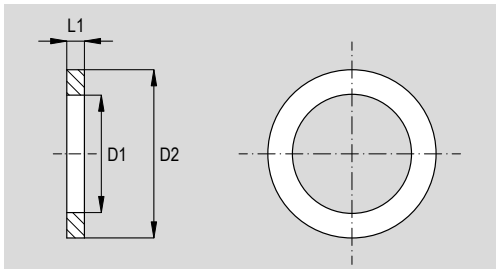

Dimensions*

Code	Item	For thread	D1 (Ø external)	D2 (Ø internal)	L1 (thickness)	Weight (g)
022690	7RF	M5	8,5	5	1	-
022681	1RF	G1/8”	14	10	1	-
022682	1RF	G1/4”	17,5	13	1,5	-
022683	3RF	G3/8”	22	17	1,5	-
022684	4RF	G1/2”	27	21	1,5	-
022685	5RF	G3/4”	32	27	1,5	-
022686	6RF	G1”	39	33	1,5	-

*On request available with special dimensions. Please contact the sales department.

Main features

Type	Description
RB	Unlosable washer (notched) for parallel (BSP) male threads, for tigthening on female thread. In Nylon (PA6).



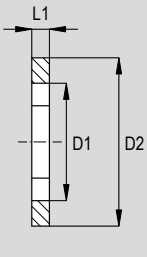

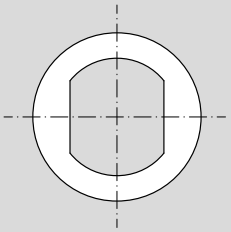

Dimensions*

Code	Item	For thread	D1 (Ø external)	D2 (Ø internal)	L1 (thickness)	Weight (g)
022695	7RB	M5	5	9	1,5	-
022691	1RB	G1/8”	10	14	2	-
022692	2RB	G1/4”	13,2	18	2	-
022693	3RB	G3/8”	17	22	2	-
022694	4RB	G1/2”	21,5	26	2,5	-

*On request available with special dimensions. Please contact the sales department.

AIR-RESERVOIRS



Find out our
key products

- **Solution for most applications**
- **Easy and intuitive choice**
- **Excellent value for money**
- **Wide availability**
- **Fast delivery**

Main features and certifications

Air-reservoirs and accessories for compressed air, built according to 2014/68/UE and 2014/29/UE directives in the field of pressure equipment.
Supplied as standard in compliance to Reach and RoHS directives. On request, can be supplied according to 2014/34/EU ATEX directive.

Series SBCV

from page 4.70.10



Series of air-reservoirs for compressed air, available in sizes from 0,5 l. to 100 l.

Air-reservoirs
Series SBCV






Code key

Size[1]	Series	Connections[1]	/	ATEX version[2]
24	**SBCV**	**4**	**/**	

- Size[1]:
  - 05 = 0,5 lt.
  - 1 = 1 lt.
  - 2 = 2,5 lt.
  - 5 = 5 lt.
  - 7 = 7 lt.
  - 10 = 10 lt.
  - 12 = 12 lt.
  - 15 = 15 lt.
  - 24 = 24 lt.
  - 50 = 50 lt.
  - 100 = 100 lt.
- Series:
  - SBCV
- Connections[1]:
  - 2 = 2 connections
  - 4 = 4 connections
- ATEX version[2]:
  - ATEX — CE Ex — II 2G Ex h IIC TX Gb / II 2D Ex h IIIC TX°C Db

Notes

For standard materials see the table below.

(1) For matching between size and connections see the table at page 4.70.12; for the specific type see from page 4.70.13.

(2) ATEX versions require 4 connections air-reservoirs only. One connection is necessarily used for grounding. For further information on 2014/34/EU ATEX Directive, on classifications and protections, see from page III.1

Warning: for safety use of air-reservoirs strictly follow the user manual provided with each product.

How to order

Size	Series	Connections
24	**SBCV**	**4**

How to order ATEX version

Size	Series	Connections		ATEX version
24	**SBCV**	**4**	**/**	**ATEX**

Main features

Series	SBCV
Fluid	Compressed air
Pressure range	11 bar
Pressure range (hydrostatic test)	16,5 bar
Temperature range	-10°C ÷ +60°C
Parallel threads	UNI - ISO 228/1 (BSP)
Capacity	0,5 lt. ÷ 100 lt.
Connections number	2, 4
Tolerance on dimensions*	±5 mm

*For dimensions see from page 4.70.13

Standard materials

Series	SBCV
Bottom	Steel Fe PO4
Shell	Steel Fe PO4
Socket joint	Fe 45.1
External treatment	Epoxide powder painting
Color	RAL 5015-110
Bottom/Shell welding	Wire
Bottom/Socket joint welding	Submerged arc
Shell/Socket joint welding	Submerged arc

Accessories

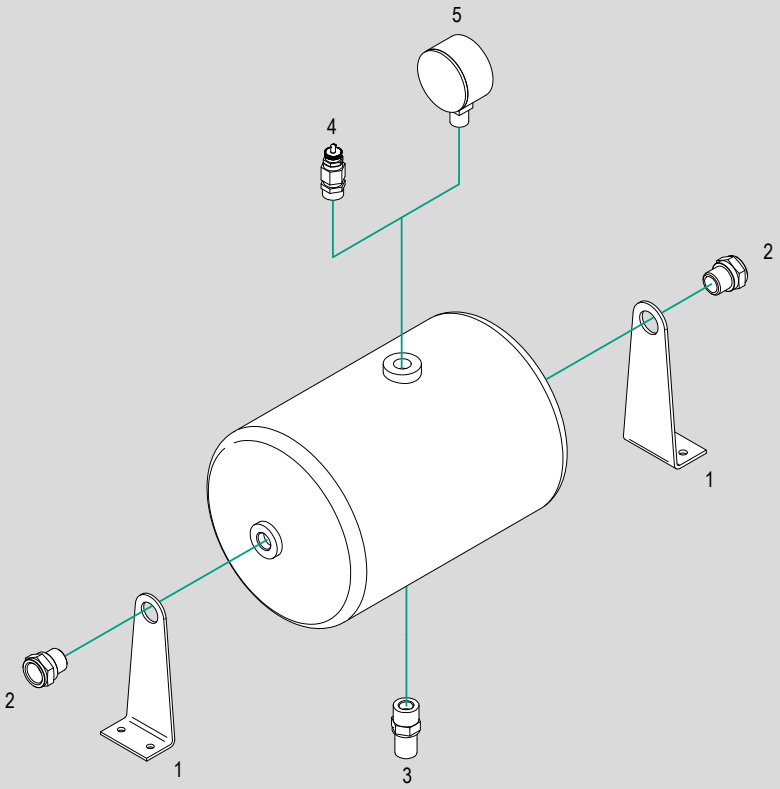

N.	Item	Description	Compliance	Matching		Data sheet and code page
				05SBCV ÷ 15SBCV	24SBCV ÷ 100SBCV	
1	STSB	Mounting bracket	-	●	–	4.70.100
2	PRSB	Bracket-tank connection fitting	-	●	●	
3	VCSB	Semi-automatic condense drain valve	-	●	●	
4	VS	Safety valve	-	●	●	2.256.1
	VSCC..	Fixed calibration safety valve	97/23/CE			
5	M..	Pressure-gauge	-	●	●	3.30.1

Key
● matching accessory; – not matching accessory

Air-reservoirs series SBCV

Item		Compliance	Symbol	Capacity	Parallel threads (BSP)	Connections		Data sheet and code page
						2	4	
05SBCV		Directive 2014/68/UE		0,5 lt.	1/2"	●	-	4.70.13
1SBCV		Directive 2014/68/UE		1 lt.	1/2"	●	●	4.70.14
2SBCV		Directive 2014/68/UE		2,5 lt.	1/2"	●	●	4.70.15
5SBCV		Directive 2014/68/UE		5 lt.	1/2"	●	●	4.70.16
7SBCV		Directive 2014/68/UE		7 lt.	1/2"	●	●	4.70.17
10SBCV		Directive 2014/68/UE		10 lt.	3/8", 1/2"	-	●	4.70.18
12SBCV		Directive 2014/68/UE		12 lt.	1/2"	●	●	4.70.19
15SBCV		Directive 2014/68/UE		15 lt.	3/8", 1/2"	-	●	4.70.20
24SBCV		Directive 2014/29/UE		24 lt.	3/8", 1"	-	●	4.70.21
50SBCV		Directive 2014/29/UE		50 lt.	1/2", 1"	-	●	4.70.22
100SBCV		Directive 2014/29/UE		100 lt.	1/2", 2"	-	●	4.70.23

Key
● allowed matching; - not allowed matching

Air-reservoirs
Series SBCV - 0,5 lt.

Main features

Version	Symbol	Code	Item
Air-reservoir in painted steel, built according to 2014/68/EU directive. Capacity 0,5 lt., with 2 connections.		050000	05SBCV2



0,5 lt.

Dimensions

2014/68/UE

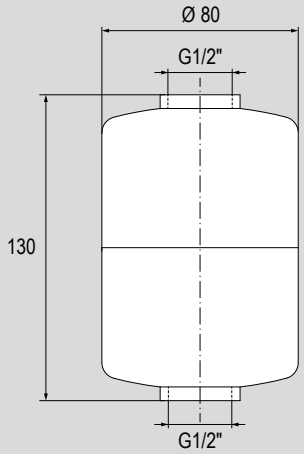

Main features

Version	Symbol	Code	Item
Air-reservoir in painted steel, built according to 2014/68/EU directive. Capacity 1 lt., with 2 connections.		050001	1SBCV2



1 lt.

Dimensions

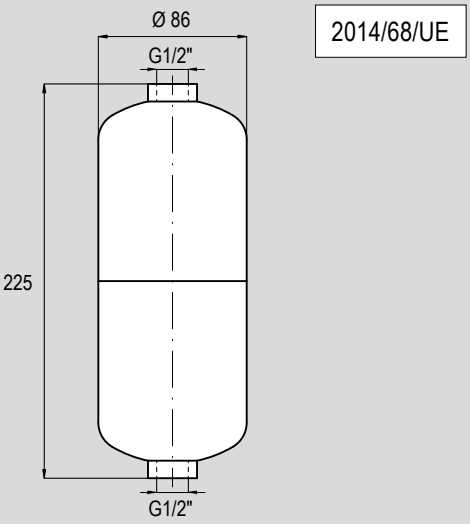

Main features

Version	Symbol	Code	Item
Air-reservoir in painted steel, built according to 2014/68/EU directive. Capacity 1 lt., with 4 connections.		050501	1SBCV4



1 lt.

Dimensions

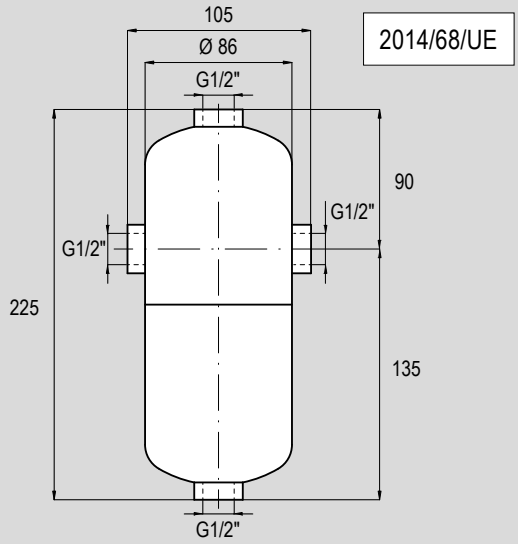

Main features

Version	Symbol	Code	Item
Air-reservoir in painted steel, built according to 2014/68/EU directive. Capacity 2,5 lt., with 2 connections.		050002	2SBCV2



2,5 lt.

Dimensions

2014/68/UE

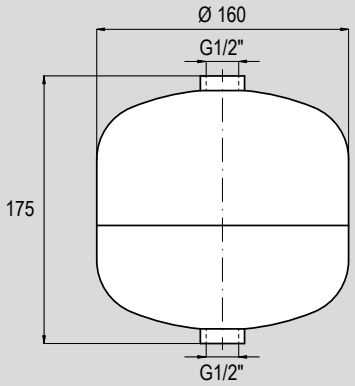

Main features

Version	Symbol	Code	Item
Air-reservoir in painted steel, built according to 2014/68/EU directive. Capacity 2,5 lt., with 4 connections.		050502	2SBCV4



2,5 lt.

Dimensions

2014/68/UE

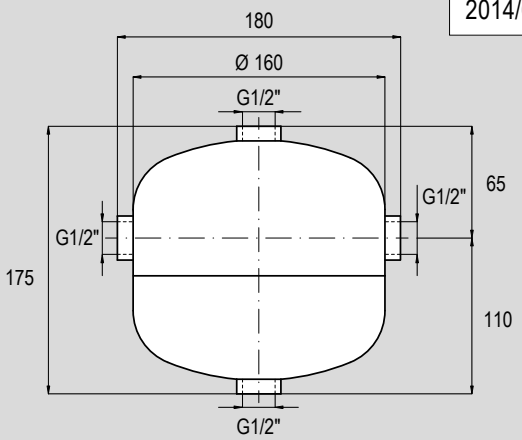

Main features

Version	Symbol	Code	Item
Air-reservoir in painted steel, built according to 2014/68/EU directive. Capacity 5 lt., with 2 connections.		050005	5SBCV2



5 lt.

Dimensions

2014/68/UE

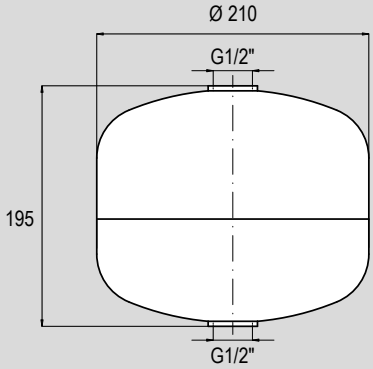

Main features

Version	Symbol	Code	Item
Air-reservoir in painted steel, built according to 2014/68/EU directive. Capacity 5 lt., with 4 connections.		050505	5SBCV4



5 lt.

Dimensions

2014/68/UE

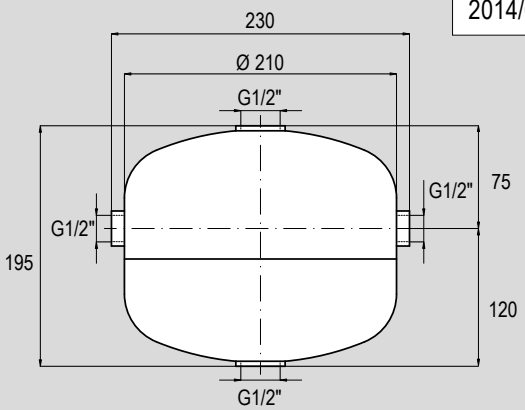

Main features

Version	Symbol	Code	Item
Air-reservoir in painted steel, built according to 2014/68/EU directive. Capacity 7 lt., with 2 connections.		050007	7SBCV2



7 lt.

Dimensions

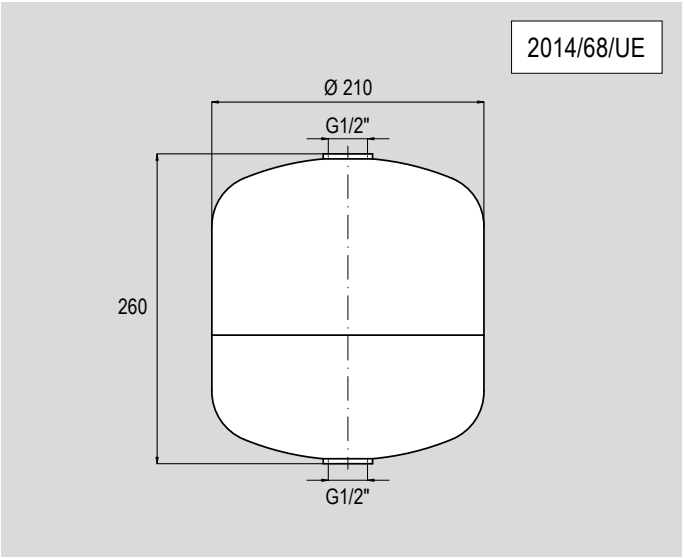

Main features

Version	Symbol	Code	Item
Air-reservoir in painted steel, built according to 2014/68/EU directive. Capacity 7 lt., with 4 connections.		050507	7SBCV4



7 lt.

Dimensions

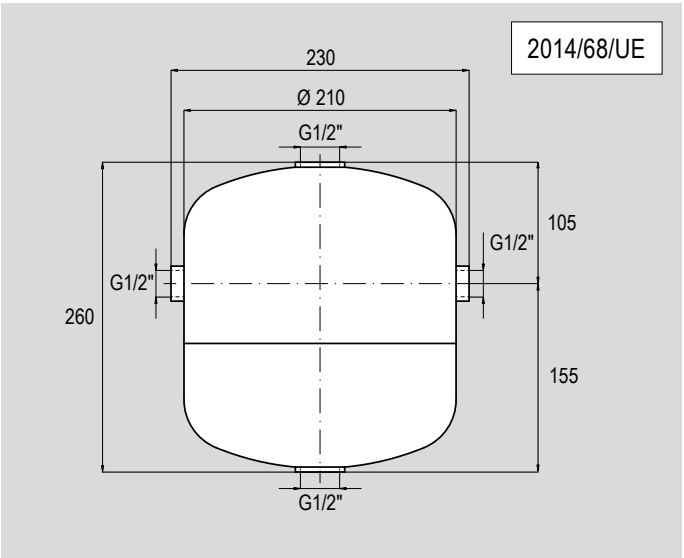

Air-reservoirs
Series SBCV - 10 lt.

Main features

Version	Symbol	Code	Item
Air-reservoir in painted steel, built according to 2014/68/EU directive. Capacity 10 lt., with 4 connections.		050604	10SBCV4



10 lt.

Dimensions

2014/68/UE

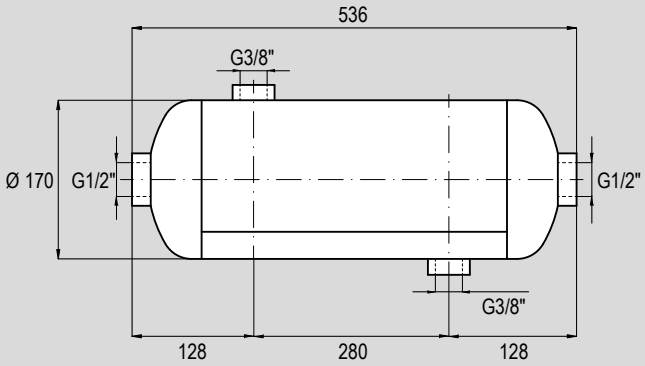

Main features

Version	Symbol	Code	Item
Air-reservoir in painted steel, built according to 2014/68/EU directive. Capacity 12 lt., with 2 connections.		050012	12SBCV2



12 lt.

Dimensions

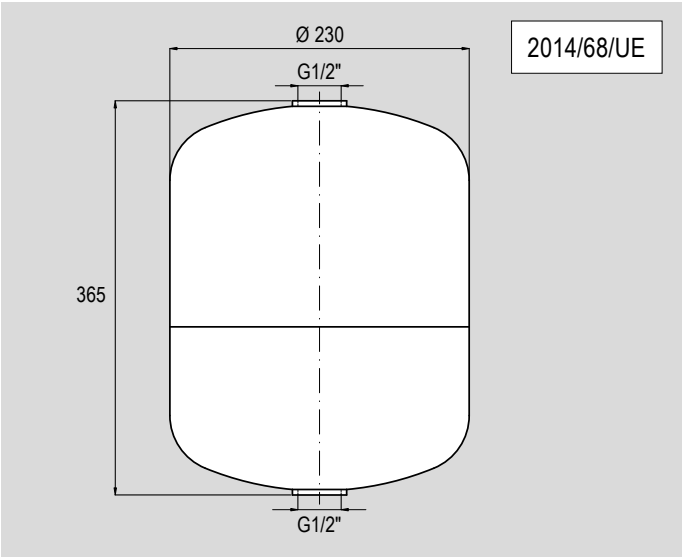

Main features

Version	Symbol	Code	Item
Air-reservoir in painted steel, built according to 2014/68/EU directive. Capacity 12 lt., with 4 connections.		050512	12SBCV4



12 lt.

Dimensions

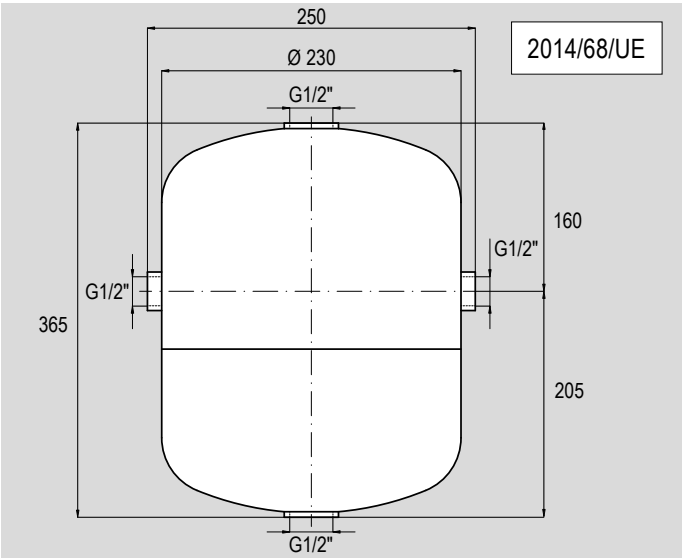

Air-reservoirs
Series SBCV - 15 lt.

Main features

Version	Symbol	Code	Item
Air-reservoir in painted steel, built according to 2014/68/EU directive. Capacity 12 lt., with 4 connections.		050605	15SBCV4



15 lt.

Dimensions

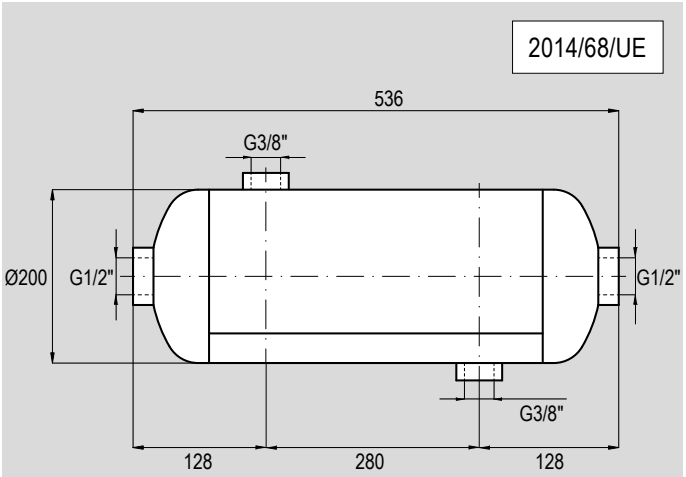

Main features

Version	Symbol	Code	Item
Air-reservoir in painted steel, built according to 2014/29/EU directive. Capacity 24 lt., with 4 connections.		050102	24SBCV4



24 lt.

Dimensions

2014/29/UE

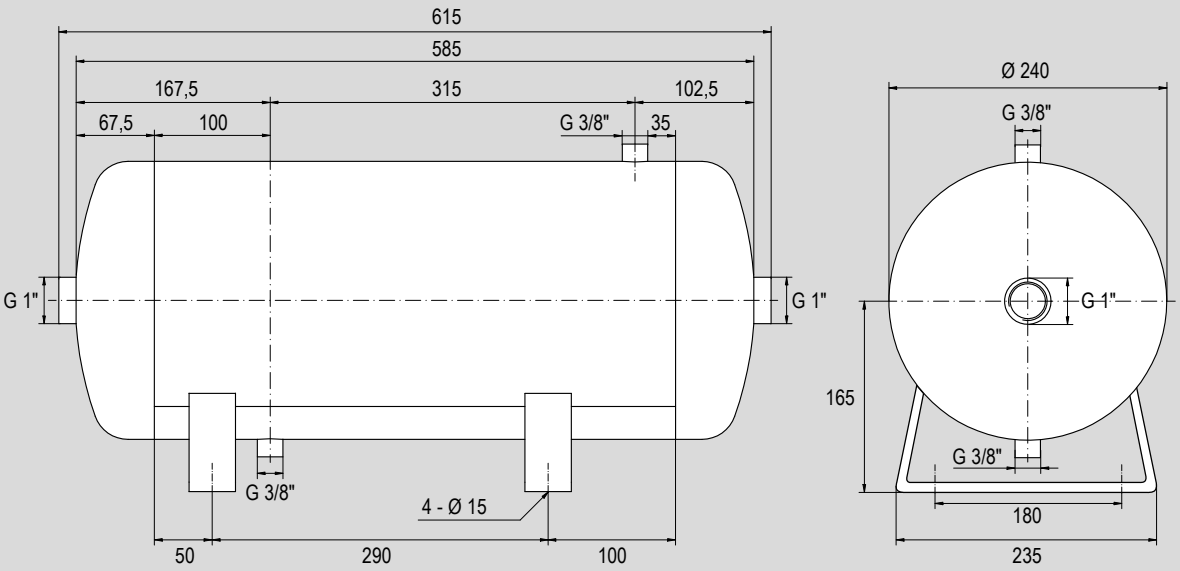

Air-reservoirs
Series SBCV - 50 lt.

Main features

Version	Symbol	Code	Item
Air-reservoir in painted steel, built according to 2014/29/EU directive. Capacity 50 lt., with 4 connections.		050101	50SBCV4



50 lt.

Dimensions

2014/29/UE

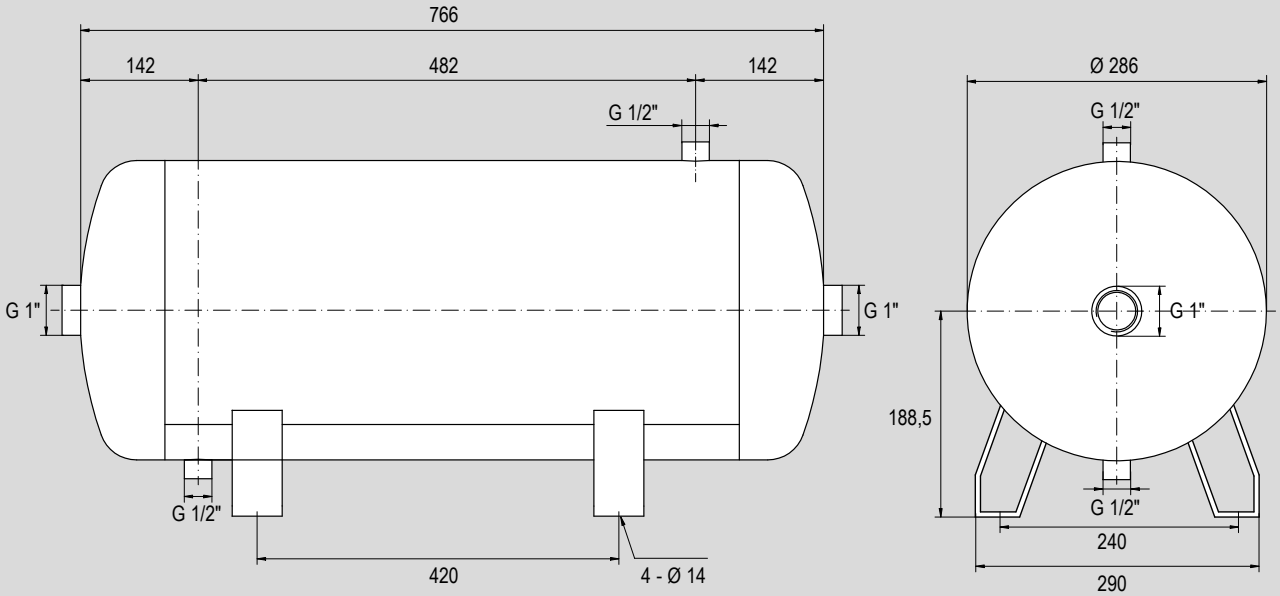

Main features

Version	Symbol	Code	Item
Air-reservoir in painted steel, built according to 2014/29/EU directive. Capacity 100 lt., with 4 connections.		050615	100SBCV4



100 lt.

Dimensions

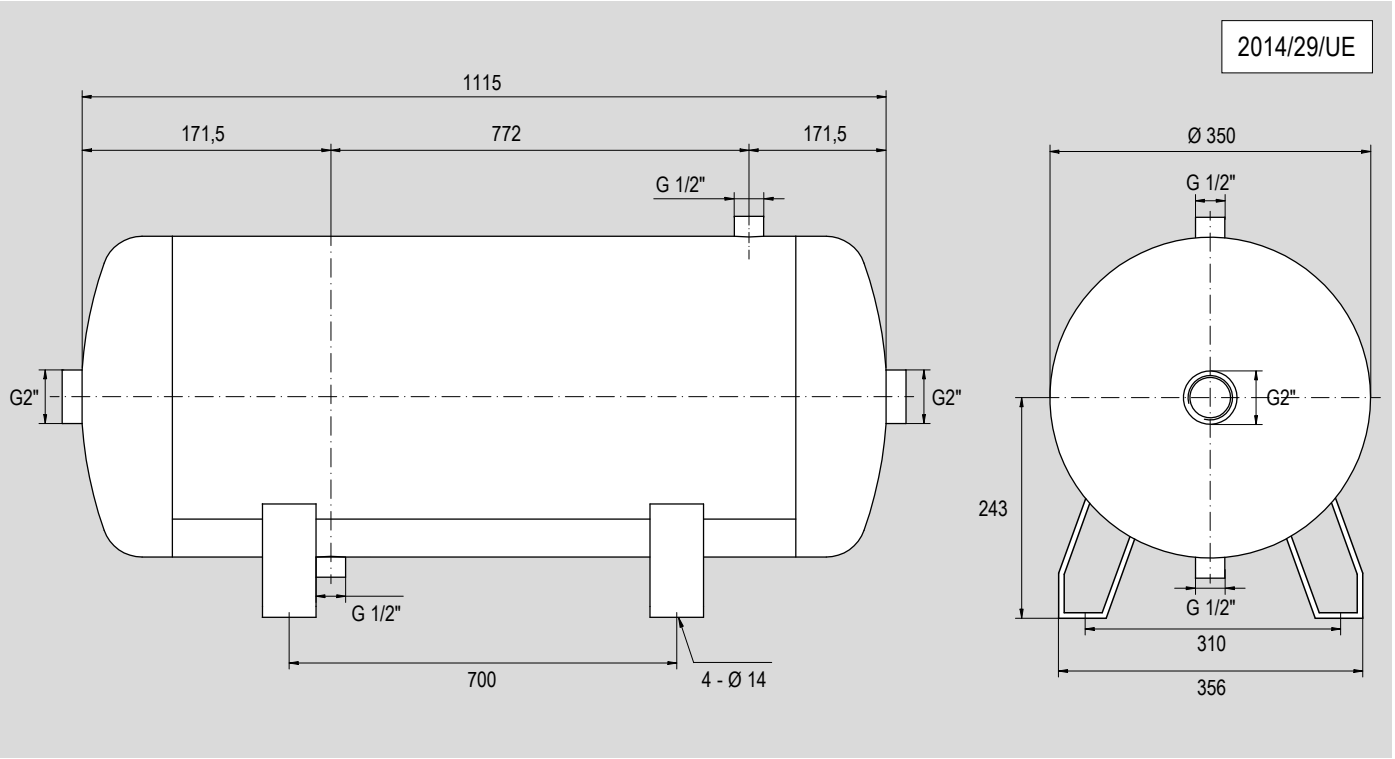

Main features

Type	Description
STSB	Mounting bracket. In zinc-plated steel. Mounting the bracket to the air-reservoir require the fitting type PRSB, to be ordered separately, see the data sheet below.



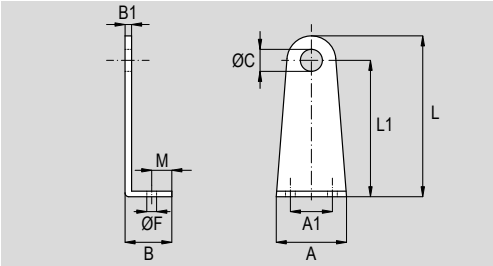

Dimensions

Code	Item	A	A1	B	B1	ØC	ØF	L	L1	M	Weight (g)
050601	STSB	59	37	36	3	21	7	150	132	15,5	-

Main features

Type	Description
PRSB	Bracket/Air-reservoir connection fitting. For sealing washers see page 4.65.1



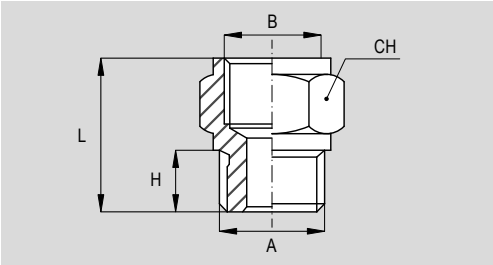

Dimensions

Code	Item	A	B	H	L	CH	Weight (g)
050603	PRSB	G1/2"	G1/2"	15	31	27	-

Main features

Type	Description
VCSB	Semi-automatic condense drain valve. In acetalic resin (POM).



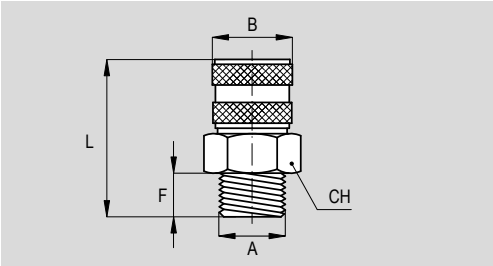

Dimensions

Code	Item	A	B	F	L	CH	Weight (g)
050602	VCSB	G1/4"	16	9	25	16	-

Notes

FLOW
and exhaust regulators



Find out our
key products

- **Solution for most applications**
- **Easy and intuitive choice**
- **Excellent value for money**
- **Wide availability**
- **Fast delivery**

Main features and certifications

Flow and exhaust regulators. Available in different functions, versions and threads.
Supplied as standard in compliance to Reach and RoHS directives.

In-line flow regulators

from page 4.92.1



Series of in line flow regulators, available with uni-directional or bi-directional regulation.

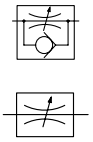

Flow regulators for cylinders

from page 4.94.1



Series of flow regulators generally directly mounted on cylinder connections to control translation speed . Available in different functions: uni-directional with out adjustment, uni-directional with in adjustment and bi-directional with adjustment in both the directions. Use of two uni-directional out adjustment regulators is reccomended for the accurate control of the cylinder speed, as they act on the outgoing flow of the cylinder chambers, and don't interfere with the incoming flow to the chambers.

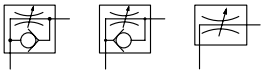

Silenced exhaust restrictors

from page 4.97.1



Series of silenced exhaust restrictors, generally used to decrease the speed and thus the translation speed of the cylinders, are usually mounted on power valve outlets or quick exhaust valves. The main feature of these regulators is to include two functions in one component: flow regulation and silencing.

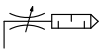

Exhaust restrictors

from page 4.99.1



Series of exhaust restrictors, generally used to decrease the speed, are usually mounted on power valve outlets or quick exhaust valves.



Flow and exhaust regulators

In-line flow regulators







Code key

Series	Type	Thread[1] or Tube[2]	Thread[1] or Tube[2]	Function[2]
V	**54**	**08**	**18**	**U**
V	52 53 54	18 = 1/8" 14 = 1/4" 38 = 3/8" 12 = 1/2"	04 = Ø 4 06 = Ø 6 08 = Ø 8	U = Uni-directional B = Bi-directional

How to order type V52-V53

Series	Type	Thread	Thread
V	**52**	**18**	**18**

How to order type V54

Series	Type	Tube	Tube	Function
V	**54**	**06**	**06**	**U**

Notes

For standard materials see the table below.

For specific type see the following page.

(1) Only for type V52 e V53

(2) Only for type V54

Technical data

Type	V52	V53	V54
Fluid	Filtered compressed air with or without lubrication		
Pressure range	2 ÷ 10 bar		0 ÷ 10 bar
Temperature range	0°C ÷ +60°C		-20°C ÷ +70°C
Flow	See page 4.92.2		
Parallel threads	UNI - ISO 228 / 1 (BSP)		
Tubes	-		Calibrated Nylon (PA6), Polyurethane (PU) and Rilsan (PA11)
Tubes tolerance	-		± 0,05 mm

Standard materials

Type	V52	V53	V54
Body	Anodized aluminium		Acetalic resin (POM)
Regulation group	Nickel-plated brass		
Push-in connection	-		Acetalic resin (POM)
Threaded connection	Anodized aluminium		-
Seals	NBR		
Spring	Stainless Steel		

Flow diagram — P = 6 bar, with ΔP 1 bar

Type: **V52 - V53**

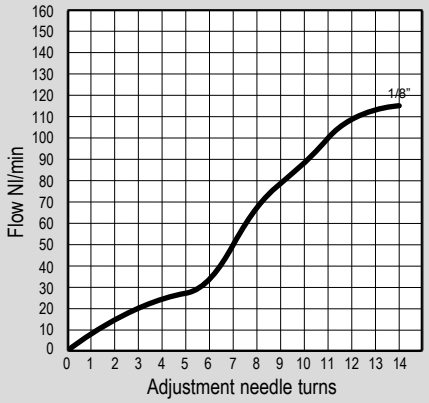

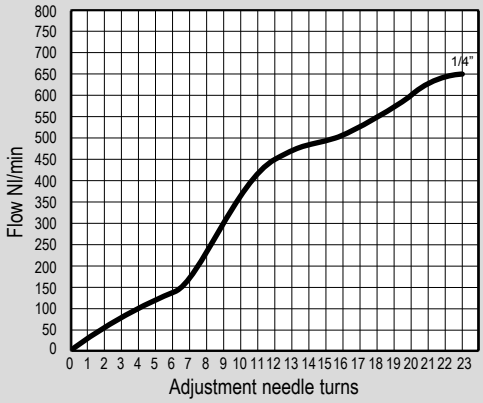

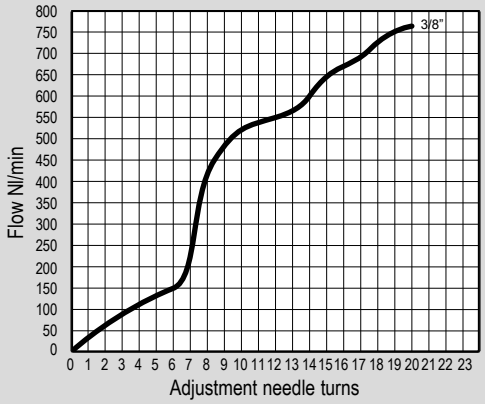

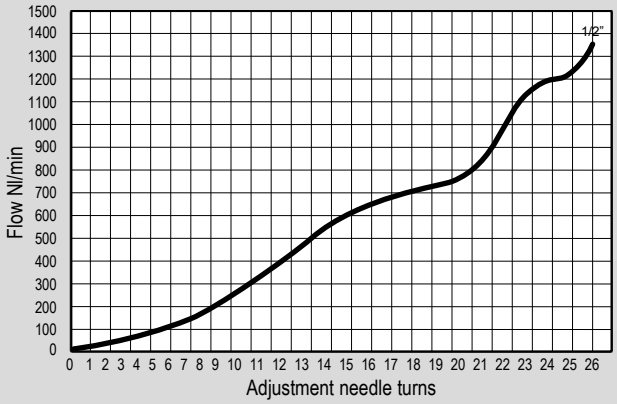

Type: **V54**

Tube: Ø **4**

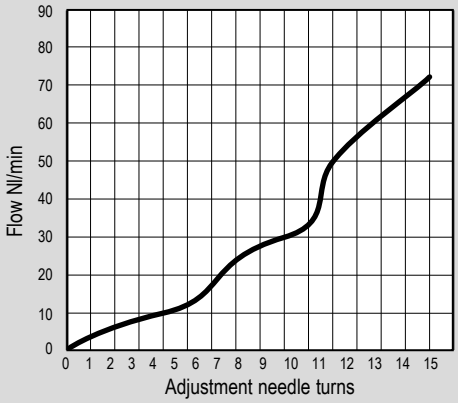

Tube: Ø **6**

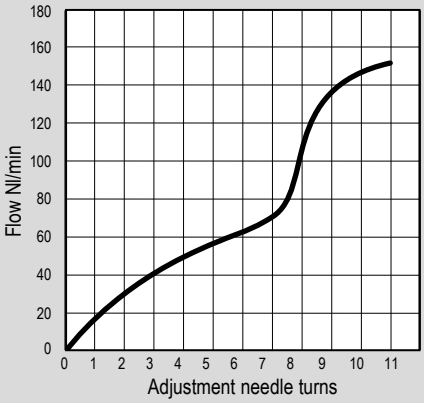

Tube: Ø **8**

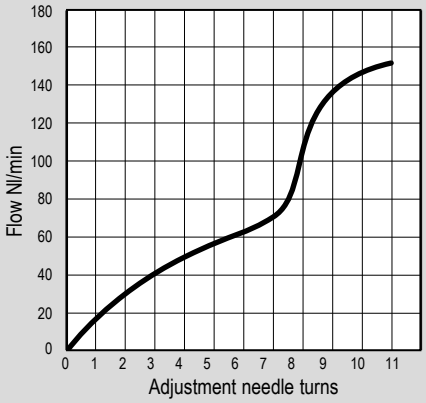

In-line flow regulators series V

Type			Functions	Parallel threads (BSP)	Tube Ø mm	Data sheet and code page
V52	Aluminium uni-directional in-line flow regulators			1/8", 1/4", 3/8", 1/2"	-	4.92.4
V53	Aluminium bi-directional in-line flow regulators			1/8", 1/4", 3/8", 1/2"	-	4.92.4
V54..U	Acetalic resin uni-directional in-line flow regulators			-	4, 6, 8	4.92.4
V54..B	Acetalic resin bi-directional in-line flow regulators			-	4, 6, 8	4.92.4

Main features

Type	Description	Function
V52	In-line flow regulators, uni-directional, in anodized aluminium. With female female thread.	
V53	In-line flow regulators, bi-directional, in anodized aluminium. With female female thread.	



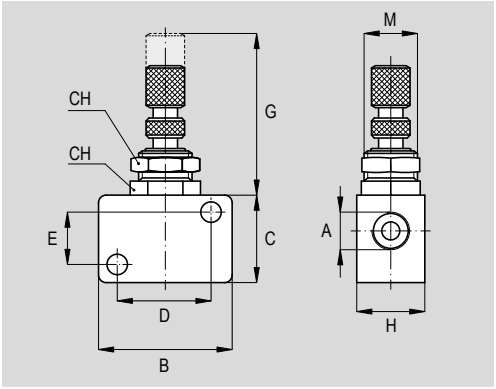

Dimensions

Code	Item	Symbol (function)	A	B	C	H	D	E	F	G	M	H	Weight (g)
030001	V521818	 (uni-directional)	G1/8”	32	22	17	23	13	4,5	35	M12	15	-
030002	V521414		G1/4”	39	32	22	30	22	4,5	35	M12	15	-
030004	V523838		G3/8”	56	42	27	43	27	6,5	43	M18	24	-
030005	V521212		G1/2”	56	42	27	43	27	6,5	43	M18	24	-
030031	V531818	 (bi-directional)	G1/8"	32	22	17	23	13	4,5	35	M12	15	-
030032	V531414		G1/4”	39	32	22	30	22	4,5	35	M12	15	-
030033	V533838		G3/8”	56	42	27	43	27	6,5	43	M18	24	-
030034	V531212		G1/2”	56	42	27	43	27	6,5	43	M18	24	-

Main features

Type	Description	Function
V54..U	In-line flow regulators, uni-directional, in acetalic resin (POM). With push-in fitting.	
V54..B	In-line flow regulators, bi-directional, in acetalic resin (POM). With push-in fitting.	



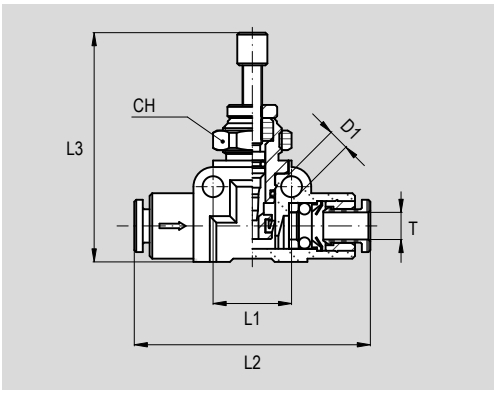

Dimensions

Code	Item	Symbol (function)	T (Øe Tube)	D1	L1	L2	L3 (max)	CH	Weight (g)
030041	V540404U	 (uni-directional)	4	3,2	13	36,4	35,9	11	11,8
030042	V540606U		6	3,2	16	47	42,3	14	24
030043	V540808U		8	3,2	16	48	43,8	14	28
030078	V540404B	 (bi-directional)	4	3,2	13	36,4	35,9	11	11,8
030079	V540606B		6	3,2	16	47	42,3	14	24
030080	V540808B		8	3,2	16	48	43,8	14	28



Code key

Series	Type (1)	Tube (1)	Thread (1)	Function (2)
V	**18**	**06**	**18**	**C**
V	14, 15, 18, 19, 36, 37, 38, 39, 41	04 = Ø 4 06 = Ø 6 8 = Ø 8 10 = Ø 10	M5 = M5x0,8 18 = 1/8" 14 = 1/4" 38 = 3/8" 12 = 1/2"	C = "Out" adjustment (For cylinders) V = "In" adjustment (For valves) B = Bi-directional adjustment

How to order

Series	Type	Tube	Thread	Function
V	**18**	**06**	**18**	**C**

Notes

The options in the same grind are alternative to each others. For standard materials see the table below.
(1) For matching between type, tube and thread, see table at page 4.94.4; for specific type see the following page.
(2) For the different functions, see table at page 4.94.3

Technical data

Type	V14	V15	V41	V18	V38	V39	V19	V36	V37
Fluid	Filtered compressed air with or without lubrication								
Pressure range	0 ÷ 10 bar								
Temperature range	-20°C ÷ +70°C								
Flow	See from page 4.94.2								
Parallel threads	UNI - ISO 228 / 1 (BSP)						-	UNI - ISO 228 / 1 (BSP)	
Taper threads	-						UNI EN 10226-1 (BSPT)	-	
Metric threads	UNI EN ISO 965-1						-	UNI EN ISO 965-1	
Tubes	Calibrated Nylon (PA6), Polyurethane (PU) and Rilsan (PA11)								
Tubes tolerance	± 0,05 mm								

Standard materials

Type	V14	V15	V41	V18	V38	V39	V19	V36	V37
Body	Nickel-plated brass				Acetalic resin (POM)				
Needle	Nickel-plated brass								
Knob	-	Nickel-plated brass		-	Nickel-plated brass		-		
Bush	Nickel-plated brass								
Fitting	-		series R (see page 4.3.1)		series RT (see page 4.7.1)				
Washer	Nylon (PA6)		-			Nylon (PA6)	-		Nylon (PA6)
Seals	NBR								

Flow diagram — P = 6 bar, with ΔP 1 bar

Type: **V18 - V41**

Tube: Ø **4x2,5**

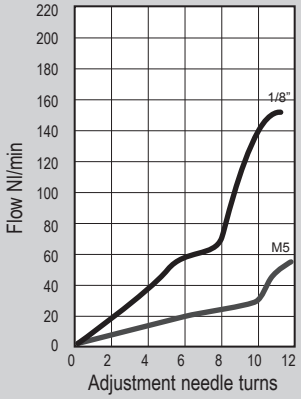

Tube: Ø **6x4**

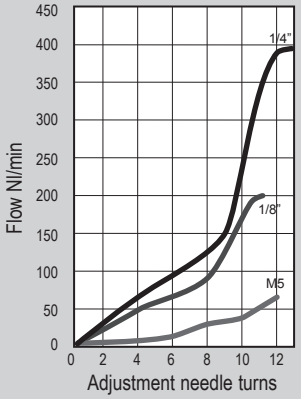

Tube: Ø **8x6**

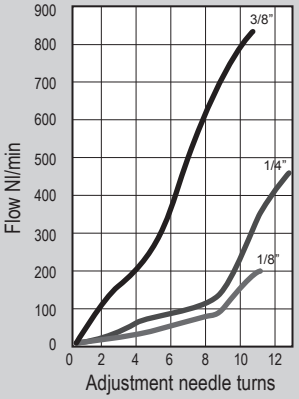

Tube: Ø **10x8**

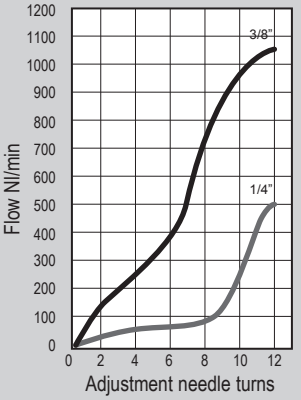

Type: **V36 - V38**

Tube: Ø **4x2,5**

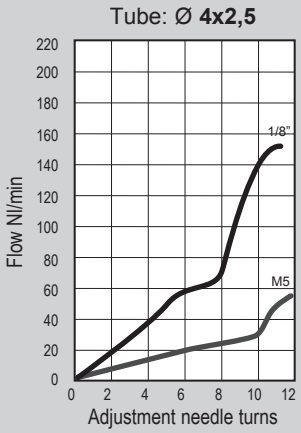

Tube: Ø **6x4**

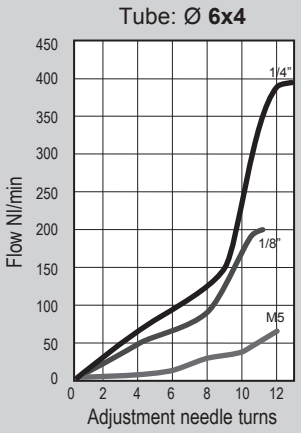

Tube: Ø **8x6**

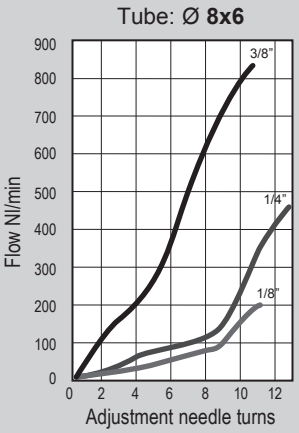

Tube: Ø **10x8**

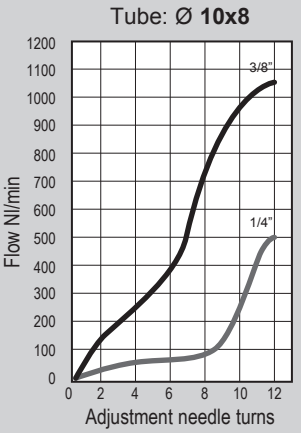

Type: **V37 - V39**

Tube: Ø **4x2,5**

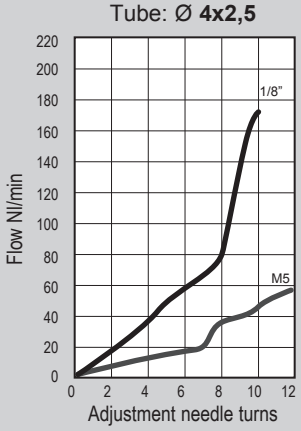

Tube: Ø **6x4**

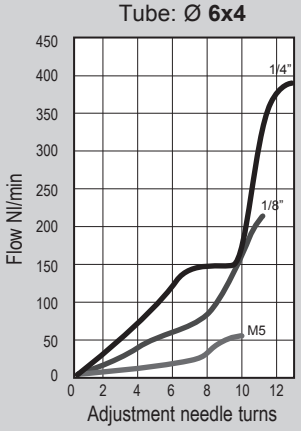

Tube: Ø **8x6**

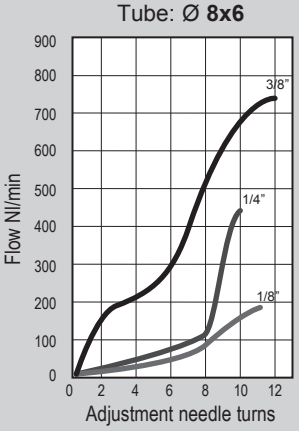

Tube: Ø **10x8**

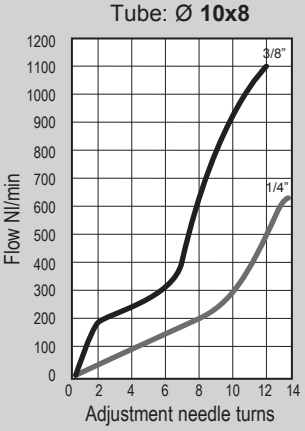

Flow diagram

P = 6 bar, with ΔP 1 bar

Type: **V19**

Tube: Ø **4x2,5**

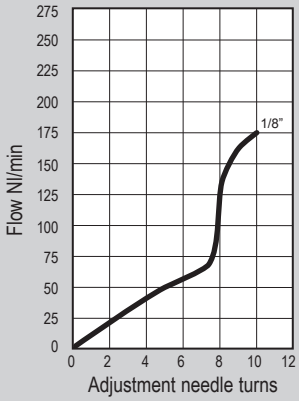

Tube: Ø **6x4**

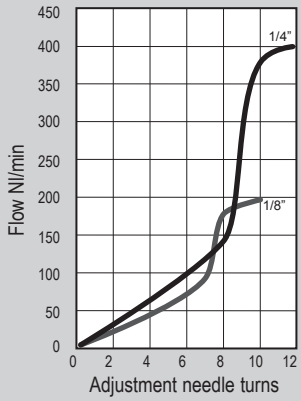

Tube: Ø **8x6**

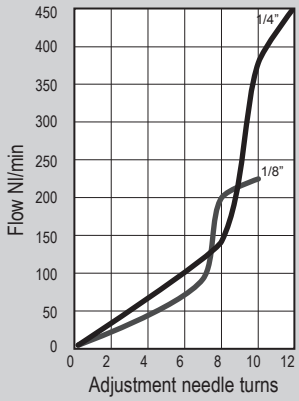

Functions

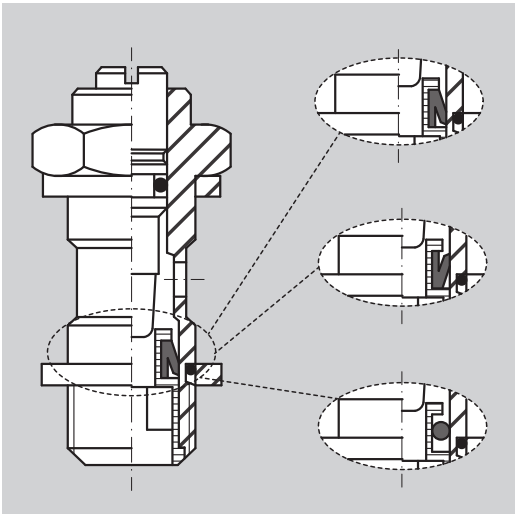

C		For cylinders. Function uni-directional with "out" adjustment
V		For valves. Function uni-directional with "in" adjustment
B		Bi-directional. Function bi-directional with adjustment in both directions

Flow regulators series V

Type			Functions	Taper threads (BSPT)	Parallel threads (BSP)	Metric threads	Tube Ø mm	Data sheet and code page
V15	Banjo bolt with screwdriver adjustment			-	1/8", 1/4", 3/8", 1/2"	M5x0,8	-	4.94.5
V14	Banjo bolt with knob adjustment		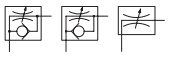	-	1/8", 1/4", 3/8", 1/2"	M5x0,8	-	4.94.6
V18	Swivel BSP with screwdriver adjustment and push-in fitting			-	1/8", 1/4", 3/8"	M5x0,8	4, 6, 8, 10	4.94.7
V41	Swivel BSP with knob adjustment and push-in fitting			-	1/8", 1/4", 3/8"	M5x0,8	4, 6, 8, 10	4.94.8
V39	Banjo BSP with screwdriver adjustment and push-in fitting			-	1/8", 1/4", 3/8"	M5x0,8	4, 6, 8, 10	4.94.9
V38	Swivel BSP with knob adjustment and push-in fitting		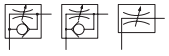	-	1/8", 1/4", 3/8"	M5x0,8	4, 6, 8, 10	4.94.10
V37	Banjo BSP with knob adjustment and push-in fitting			-	1/8", 1/4", 3/8"	M5x0,8	4, 6, 8, 10	4.94.11
V19	Banjo BSPT with knob adjustment and push-in fitting			1/8", 1/4"	-	-	4, 6, 8	4.94.12
V36	Swivel BSP with knob adjustment and push-in fitting			-	1/8", 1/4", 3/8"	M5x0,8	4, 6, 8, 10	4.94.13

Thread/Tube matching

External Tube Ø	Thread								
	M5x0,8	G1/8"	G1/4"	G3/8"	G1/2"	R1/8"	R1/4"	R3/8"	R1/2"
Ø 4 mm	●	●	-	-	-	●	-	-	-
Ø 6 mm	●	●	●	-	-	●	●	-	-
Ø 8 mm	-	●	●	●	-	●	●	-	-
Ø 10 mm	-	-	●	●	-	-	-	-	-

Key
● available matching; - not available matching

Flow and exhaust regulators
Flow regulators type V15

Main features

Type	Description	Function
V15..C	Banjo bolt with screwdriver adjustment. For cylinders. In nickel-plated brass.	
V15..V	Banjo bolt with screwdriver adjustment. For valves. In nickel-plated brass.	
V15..B	Banjo bolt with screwdriver adjustment. Bi-directional. In nickel-plated brass.	



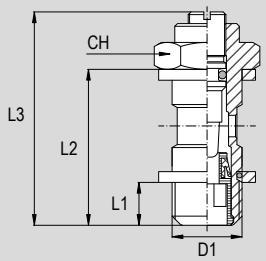

Dimensions

Code	Item	Symbol (function)	D1	L1	L2	L3 (max)	CH	Weight (g)
024021	V15 00 M5C	(for cylinders)	M5x0,8	4	15,2	25	8	4,8
024022	V15 00 18C		G1/8"	5,1	23,7	31,7	14	16,8
024023	V15 00 14C		G1/4"	6,7	27,9	39,5	17	32,4
024024	V15 00 38C		G3/8"	7,4	31	52	20	61
024025	V15 00 12C		G1/2"	9,9	37,9	60,7	26	106
024031	V15 00 M5V	(for valves)	M5x0,8	4	15,2	25	8	4,8
024032	V15 00 18V		G1/8"	5,1	23,7	31,7	14	16,8
024033	V15 00 14V		G1/4"	6,7	27,9	39,5	17	32,4
024034	V15 00 38V		G3/8"	7,4	31	52	20	61
024001	V15 00 M5B	(bi-directional)	M5x0,8	4	15,2	25	8	4,8
024002	V15 00 18B		G1/8"	5,1	23,7	31,7	14	16,8
024003	V15 00 14B		G1/4"	6,7	27,9	39,5	17	32,4
024004	V15 00 38B		G3/8"	7,4	31	52	20	61
024005	V15 00 12B		G1/2"	9,9	37,9	60,7	26	106

Matching with banjo series R



Code	Item	For thread	Tube ext.Ø
020731	R 35 04 M5R	M5	4
020745	R 35 06 M5R	M5	6
020733	R 35 04 18	1/8"	4
020736	R 35 06 18	1/8"	6
020737	R 35 06 14	1/4"	6
020738	R 35 08 18	1/8"	8
020739	R 35 08 14	1/4"	8
020740	R 35 08 38	3/8"	8
020741	R 35 10 14	1/4"	10
020742	R 35 10 38	3/8"	10
020743	R 35 12 38	3/8"	12
020744	R 35 12 12	1/2"	12

Matching with banjo series RT



Code	Item	For thread	Tube ext.Ø
029400	RT 28 04 M5R	M5	4
029407	RT 28 06 M5R	M5	6
029392	RT 28 04 18	1/8"	4
029393	RT 28 06 18	1/8"	6
029394	RT 28 06 14	1/8"	6
029395	RT 28 08 18	1/4"	6
029396	RT 28 08 14	1/8"	8
029397	RT 28 08 38	3/8"	8
029398	RT 28 10 14	1/4"	10
029399	RT 28 10 38	3/8"	10

Matching with banjo series C



Code	Item	For thread	Tube ext.Ø
021319	C 23 04 M5R	M5	4
021302	C 23 06 M5R	M5	6
021318	C 23 04 18	1/8"	4
021303	C 23 05 18	1/8"	5
021305	C 23 06 M5R	M5	6
021306	C 23 06 18	1/8"	6
021307	C 23 06 14	1/4"	6
021308	C 23 08 18	1/8"	8
021309	C 23 08 14	1/4"	8
021310	C 23 08 38	3/8"	8
021311	C 23 10 14	1/4"	10
021312	C 23 10 38	3/8"	10

Matching with banjo series O



Code	Item	For thread	Tube ext.Ø
022056	O 25 06 18	1/8"	6
022057	O 25 06 14	1/4"	6
022058	O 25 08 18	1/8"	8
022059	O 25 08 14	1/4"	8

Matching with banjo series A



Code	Item	For thread	Thread
022875	A042 05 05	M5	M5
022871	A042 18 18	1/8"	1/8"
022872	A042 14 14	1/4"	1/4"
022873	A042 38 38	3/8"	3/8"
022874	A042 12 12	1/2"	1/2"

Main features

Type	Description	Function
V14..C	Banjo bolt with knob adjustment. For cylinders. In nickel-plated brass.	
V14..V	Banjo bolt with knob adjustment. For valves. In nickel-plated brass.	
V14..B	Banjo bolt with knob adjustment. Bi-directional. In nickel-plated brass.	



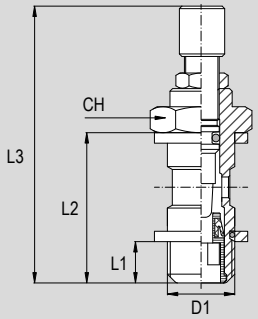

Dimensions

Code	Item	Symbol (function)	D1	L1	L2	L3 (max)	CH	Weight (g)
024026	V14 00 M5C	(for cylinders)	M5x0,8	4	15,2	38,1	8	6,5
024027	V14 00 18C		G1/8"	5,1	23,7	42	14	20,2
024028	V14 00 14C		G1/4"	6,7	27,9	51	17	37,9
024029	V14 00 38C		G3/8"	7,4	31	63,5	20	73
024030	V14 00 12C		G1/2"	9,9	37,9	80,3	26	137,1
024341	V14 00 M5V	(for valves)	M5x0,8	4	15,2	38,1	8	6,5
024342	V14 00 18V		G1/8"	5,1	23,7	42	14	20,2
024343	V14 00 14V		G1/4"	6,7	27,9	51	17	37,9
024344	V14 00 38V		G3/8"	7,4	31	63,5	20	73
024411	V14 00 M5B	(bi-directional)	M5x0,8	4	15,2	38,1	8	6,5
024412	V14 00 18B		G1/8"	5,1	23,7	42	14	20,2
024413	V14 00 14B		G1/4"	6,7	27,9	51	17	37,9
024414	V14 00 38B		G3/8"	7,4	31	63,5	20	73
024415	V14 00 12B		G1/2"	9,9	37,9	80,3	26	137,1

Matching with banjo series R



Code	Item	For thread	Tube ext.Ø
020731	R 35 04 M5R	M5	4
020745	R 35 06 M5R	M5	6
020733	R 35 04 18	1/8"	4
020736	R 35 06 18	1/8"	6
020737	R 35 06 14	1/4"	6
020738	R 35 08 18	1/8"	8
020739	R 35 08 14	1/4"	8
020740	R 35 08 38	3/8"	8
020741	R 35 10 14	1/4"	10
020742	R 35 10 38	3/8"	10
020743	R 35 12 38	3/8"	12
020744	R 35 12 12	1/2"	12

Matching with banjo series RT



Code	Item	For thread	Tube ext.Ø
029400	RT 28 04 M5R	M5	4
029407	RT 28 06 M5R	M5	6
029392	RT 28 04 18	1/8"	4
029393	RT 28 06 18	1/8"	6
029394	RT 28 06 14	1/8"	6
029395	RT 28 08 18	1/4"	6
029396	RT 28 08 14	1/8"	8
029397	RT 28 08 38	3/8"	8
029398	RT 28 10 14	1/4"	10
029399	RT 28 10 38	3/8"	10

Matching with banjo series C



Code	Item	For thread	Tube ext.Ø
021319	C 23 04 M5R	M5	4
021302	C 23 06 M5R	M5	6
021318	C 23 04 18	1/8"	4
021303	C 23 05 18	1/8"	5
021305	C 23 06 M5R	M5	6
021306	C 23 06 18	1/8"	6
021307	C 23 06 14	1/4"	6
021308	C 23 08 18	1/8"	8
021309	C 23 08 14	1/4"	8
021310	C 23 08 38	3/8"	8
021311	C 23 10 14	1/4"	10
021312	C 23 10 38	3/8"	10

Matching with banjo series O



Code	Item	For thread	Tube ext.Ø
022056	O 25 06 18	1/8"	6
022057	O 25 06 14	1/4"	6
022058	O 25 08 18	1/8"	8
022059	O 25 08 14	1/4"	8

Matching with banjo series A



Code	Item	For thread	Thread
022875	A042 05 05	M5	M5
022871	A042 18 18	1/8"	1/8"
022872	A042 14 14	1/4"	1/4"
022873	A042 38 38	3/8"	3/8"
022874	A042 12 12	1/2"	1/2"

Main features

Type	Description	Function
V18..C	Swivel BSP with screwdriver adjustment and push-in fitting. For cylinders. In nickel-plated brass.	
V18..V	Swivel BSP with screwdriver adjustment and push-in fitting. For valves. In nickel-plated brass.	
V18..B	Swivel BSP with screwdriver adjustment and push-in fitting. Bi-directional. In nickel-plated brass.	



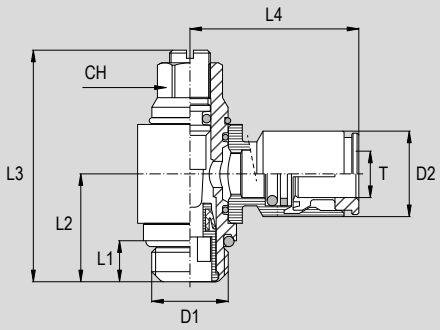

Dimensions

Code	Item	Symbol (function)	T (Øe tube)	D1	D2	L1	L2	L3 (max)	L4	CH	Weight (g)
024081	V18 04 M5C	(for cylinders)	4	M5x0,8	9,1	4	12,5	25,5	18,5	6	13
024082	V18 04 18C		4	G1/8"	9,1	5,2	15,1	31,8	20,5	9	31
024398	V18 06 M5C		6	M5x0,8	12	4	12,5	25,5	21,5	6	15,5
024085	V18 06 18C		6	G1/8"	12	5,2	15,1	31,8	22,5	9	35
024086	V18 06 14C		6	G1/4"	12	6,4	17,4	39,5	24	10	57
024087	V18 08 18C		8	G1/8"	14	5,2	15,1	31,8	23,5	9	32,5
024088	V18 08 14C		8	G1/4"	14	6,4	17,4	39,5	24,5	10	56
020246	V18 08 38C		8	G3/8"	14	7	20	50	26,5	14	90
024089	V18 10 14C		10	G1/4"	16	6,4	17,4	39,8	27	10	50
024090	V18 10 38C		10	G3/8"	16	7	20	50	29	14	91
024091	V18 04 M5V	(for valves)	4	M5x0,8	9,1	4	12,5	25,5	18,5	6	13
024092	V18 04 18V		4	G1/8"	9,1	5,2	15,1	31,8	20,5	9	31
024399	V18 06 M5V		6	M5x0,8	12	4	12,5	25,5	21,5	6	15,5
024095	V18 06 18V		6	G1/8"	12	5,2	15,1	31,8	22,5	9	35
024096	V18 06 14V		6	G1/4"	12	6,4	17,4	39,5	24	10	57
024097	V18 08 18V		8	G1/8"	14	5,2	15,1	31,8	23,5	9	32,5
024098	V18 08 14V		8	G1/4"	14	6,4	17,4	39,5	24,5	10	56
024120	V18 08 38V		8	G3/8"	14	7	20	50	26,5	14	90
024099	V18 10 14V		10	G1/4"	16	6,4	17,4	39,8	27	10	50
024140	V18 10 38V		10	G3/8"	16	7	20	50	29	14	91
024131	V18 04 M5B	(bi-directional)	4	M5x0,8	9,1	4	12,5	25,5	18,5	6	13
024132	V18 04 18B		4	G1/8"	9,1	5,2	15,1	31,8	20,5	9	31
024400	V18 06 M5B		6	M5x0,8	12	4	12,5	25,5	21,5	6	15,5
024135	V18 06 18B		6	G1/8"	12	5,2	15,1	31,8	22,5	9	35
024136	V18 06 14B		6	G1/4"	12	6,4	17,4	39,5	24	10	57
024137	V18 08 18B		8	G1/8"	14	5,2	15,1	31,8	23,5	9	32,5
024138	V18 08 14B		8	G1/4"	14	6,4	17,4	39,5	24,5	10	56
024175	V18 08 38B		8	G3/8"	14	7	20	50	26,5	14	90
024139	V18 10 14B		10	G1/4"	16	6,4	17,4	39,8	27	10	50
024176	V18 10 38B		10	G3/8"	16	7	20	50	29	14	91

Main features

Type	Description	Function
V41..C	Swivel BSP with knob adjustment and push-in fitting. For cylinders. In nickel-plated brass.	
V41..V	Swivel BSP with knob adjustment and push-in fitting. For valves. In nickel-plated brass.	
V41..B	Swivel BSP with knob adjustment and push-in fitting. Bi-directional. In nickel-plated brass.	



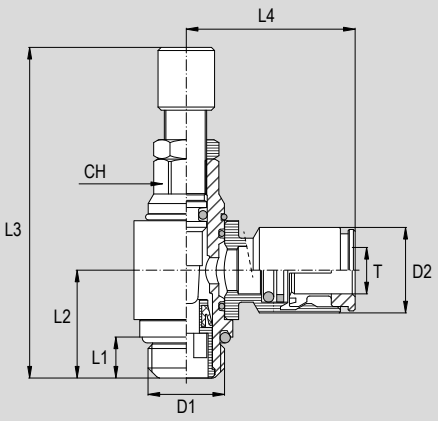

Dimensions

Code	Item	Symbol (function)	T (Øe tube)	D1	D2	L1	L2	L3 (max)	L4	CH	Weight (g)
024185	V41 04 M5C	(for cylinders)	4	M5x0,8	9,1	4	12,5	39,4	18,5	6	15
024186	V41 04 18C		4	G1/8"	9,1	5,2	15,1	41,9	20,5	9	37
024416	V41 06 M5C		6	M5x0,8	12	4	12,5	39,4	21,5	6	16,9
024189	V41 06 18C		6	G1/8"	12	5,2	15,1	41,9	22,5	9	41
024190	V41 06 14C		6	G1/4"	12	6,4	17,4	50,8	24	10	63
024191	V41 08 18C		8	G1/8"	14	5,2	15,1	41,9	23,5	9	45
024192	V41 08 14C		8	G1/4"	14	6,4	17,4	50,8	24,5	10	62
024194	V41 08 38C		8	G3/8"	14	7	20	63,5	26,5	14	103
024193	V41 10 14C		10	G1/4"	16	6,4	17,4	50,8	27	10	93
024195	V41 19 38C		10	G3/8"	16	7	20	63,5	29	14	104
024361	V41 04 M5V	(for valves)	4	M5x0,8	9,1	4	12,5	39,4	18,5	6	15
024362	V41 04 18V		4	G1/8"	9,1	5,2	15,1	41,9	20,5	9	37
024417	V41 06 M5C		6	M5x0,8	12	4	12,5	39,4	21,5	6	16,9
024365	V41 06 18V		6	G1/8"	12	5,2	15,1	41,9	22,5	9	41
024366	V41 06 14V		6	G1/4"	12	6,4	17,4	50,8	24	10	63
024367	V41 08 18V		8	G1/8"	14	5,2	15,1	41,9	23,5	9	45
024368	V41 08 14V		8	G1/4"	14	6,4	17,4	50,8	24,5	10	62
024370	V41 08 38V		8	G3/8"	14	7	20	63,5	26,5	14	103
024369	V41 10 14V		10	G1/4"	16	6,4	17,4	50,8	27	10	93
024378	V41 10 38V		10	G3/8"	16	7	20	63,5	29	14	104
024431	V41 04 M5B	(bi-directional)	4	M5x0,8	9,1	4	12,5	39,4	18,5	6	15
024432	V41 04 18B		4	G1/8"	9,1	5,2	15,1	41,9	20,5	9	37
024418	V41 06 M5B		6	M5x0,8	12	4	12,5	39,4	21,5	6	16,9
024435	V41 06 18B		6	G1/8"	12	5,2	15,1	41,9	22,5	9	41
024436	V41 06 14B		6	G1/4"	12	6,4	17,4	50,8	24	10	63
024437	V41 08 18B		8	G1/8"	14	5,2	15,1	41,9	23,5	9	45
024438	V41 08 14B		8	G1/4"	14	6,4	17,4	50,8	24,5	10	62
024440	V41 08 38B		8	G3/8"	14	7	20	63,5	26,5	14	103
024439	V41 10 14B		10	G1/4"	16	6,4	17,4	50,8	27	10	93
024450	V41 10 38B		10	G3/8"	16	7	20	63,5	29	14	104

Main features

Type	Description	Function
V39..C	Banjo BSP with screwdriver adjustment and push-in fitting. For cylinders. In acetalic resin (POM).	
V39..V	Banjo BSP with screwdriver adjustment and push-in fitting. For valves. In acetalic resin (POM).	
V39..B	Banjo BSP with screwdriver adjustment and push-in fitting. Bi-directional. In acetalic resin (POM).	



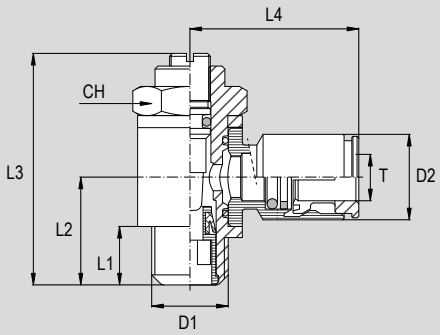

Dimensions

Code	Item	Symbol (function)	T (Øe tube)	D1	D2	L1	L2	L3 (max)	L4	CH	Weight (g)
024100	V39 04 M5C	(for cylinders)	4	M5x0,8	9,7	4	15,2	25	17,6	8	7
024101	V39 04 18C		4	G1/8"	9,7	5,1	23,7	31,7	19,1	14	20
024109	V39 06 M5C		6	M5x0,8	12	4	15,2	25	21,5	8	8
024103	V39 06 18C		6	G1/8"	12	5,1	23,7	31,7	22,7	14	22
024104	V39 06 14C		6	G1/4"	12	6,7	27,2	39,5	24,3	17	38
024105	V39 08 18C		8	G1/8"	14	5,1	23,7	31,7	23	14	21
024106	V39 08 14C		8	G1/4"	14	6,7	27,2	39,5	24,6	17	39
024110	V39 08 38C		8	G3/8"	14	7,4	31	50	26,5	20	67
024107	V39 10 14C		10	G1/4"	16	6,7	27,2	39,5	27	17	39
024108	V39 10 38C		10	G3/8"	16	7,4	31	50	28,5	20	68
024119	V39 04 M5V	(for valves)	4	M5x0,8	9,7	4	15,2	25	17,6	8	7
024111	V39 04 18V		4	G1/8"	9,7	5,1	23,7	31,7	19,1	14	20
024230	V39 06 M5V		6	M5x0,8	12	4	15,2	25	21,5	8	8
024113	V39 06 18V		6	G1/8"	12	5,1	23,7	31,7	22,7	14	21
024114	V39 06 14V		6	G1/4"	12	6,7	27,2	39,5	24,3	17	38
024115	V39 08 18V		8	G1/8"	14	5,1	23,7	31,7	23	14	22
024116	V39 08 14V		8	G1/4"	14	6,7	27,2	39,5	24,6	17	39
024231	V39 08 38V		8	G3/8"	14	7,4	31	50	26,5	20	67
024117	V39 10 14V		10	G1/4"	16	6,7	27,2	39,5	27	17	39
024118	V39 10 38V		10	G3/8"	16	7,4	31	50	28,5	20	68
024122	V39 04 M5B	(bi-directional)	4	M5x0,8	9,7	4	15,2	25	17,6	8	7
024121	V39 04 18B		4	G1/8"	9,7	5,1	23,7	31,7	19,1	14	20
024129	V39 06 M5B		6	M5x0,8	12	4	15,2	25	21,5	8	8
024123	V39 06 18B		6	G1/8"	12	5,1	23,7	31,7	22,7	14	22
024124	V39 06 14B		6	G1/4"	12	6,7	27,2	39,5	24,3	17	38
024125	V39 08 18B		8	G1/8"	14	5,1	23,7	31,7	23	14	21
024126	V39 08 14B		8	G1/4"	14	6,7	27,2	39,5	24,6	17	39
024130	V39 08 38B		8	G3/8"	14	7,4	31	50	26,5	20	67
024127	V39 10 14B		10	G1/4"	16	6,7	27,2	39,5	27	17	39
024128	V39 10 38B		10	G3/8"	16	7,4	31	50	28,5	20	68

Main features

Type	Description	Function
V38..C	Swivel BSP with knob adjustment and push-in fitting. For cylinders. In acetalic resin (POM).	
V38..V	Swivel BSP with knob adjustment and push-in fitting. For valves. In acetalic resin (POM).	
V38..B	Swivel BSP with knob adjustment and push-in fitting. Bi-directional. In acetalic resin (POM).	



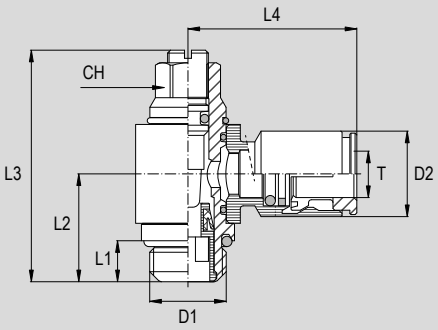

Dimensions

Code	Item	Symbol (function)	T (Øe tube)	D1	D2	L1	L2	L3 (max)	L4	CH	Weight (g)
024201	V38 04 M5C	(for cylinders)	4	M5x0,8	9,7	4	12	25,5	17,6	6	8
024202	V38 04 18C		4	G1/8"	9,7	5,2	15,1	31,8	19,1	9	17
024208	V38 06 M5C		6	M5x0,8	12	4	11,5	25,2	21,5	6	9
024203	V38 06 18C		6	G1/8"	12	5,2	15,1	31,8	22,7	9	18
024204	V38 06 14C		6	G1/4"	12	6,4	17,4	39,5	24,3	10	31
024205	V38 08 18C		8	G1/8"	14	5,2	14,9	31,8	23	9	20
024206	V38 08 14C		8	G1/4"	14	6,4	17,4	39,5	24,6	10	32
024210	V38 08 38C		8	G3/8"	14	7	20	50	26,5	14	59
024207	V38 10 14C		10	G1/4"	16	6,4	17,4	39,5	27	10	33
024209	V38 10 38C		10	G3/8"	16	7	20	50	28,5	14	60
024211	V38 04 M5V	(for valves)	4	M5x0,8	9,7	4	12	25,5	17,6	6	8
024212	V38 04 18V		4	G1/8"	9,7	5,2	15,1	31,8	19,1	9	17
024218	V38 06 M5V		6	M5x0,8	12	4	11,5	25,2	21,5	6	9
024213	V38 06 18V		6	G1/8"	12	5,2	15,1	31,8	22,7	9	18
024214	V38 06 14V		6	G1/4"	12	6,4	17,4	39,5	24,3	10	31
024215	V38 08 18V		8	G1/8"	14	5,2	14,9	31,8	23	9	20
024216	V38 08 14V		8	G1/4"	14	6,4	17,4	39,5	24,6	10	32
024219	V38 08 38V		8	G3/8"	14	7	20	50	26,5	14	59
024217	V38 10 14V		10	G1/4"	16	6,4	17,4	39,5	27	10	33
024220	V38 10 38V		10	G3/8"	16	7	20	50	28,5	14	60
024221	V38 04 M5B	(bi-directional)	4	M5x0,8	9,7	4	12	25,5	17,6	6	8
024222	V38 04 18B		4	G1/8"	9,7	5,2	15,1	31,8	19,1	9	17
024227	V38 06 M5B		6	M5x0,8	12	4	11,5	25,2	21,5	6	9
024223	V38 06 18B		6	G1/8"	12	5,2	15,1	31,8	22,7	9	18
024224	V38 06 14B		6	G1/4"	12	6,4	17,4	39,5	24,3	10	31
024225	V38 08 18B		8	G1/8"	14	5,2	14,9	31,8	23	9	20
024226	V38 08 14B		8	G1/4"	14	6,4	17,4	39,5	24,6	10	32
024229	V38 08 38B		8	G3/8"	14	7	20	50	26,5	14	59
024228	V38 10 14B		10	G1/4"	16	6,4	17,4	39,5	27	10	33
024254	V38 10 38B		10	G3/8"	16	7	20	50	28,5	14	60

Main features

Type	Description	Function
V37..C	Banjo BSP with knob adjustment and push-in fitting. For cylinders. In acetalic resin (POM).	
V37..V	Banjo BSP with knob adjustment and push-in fitting. For valves. In acetalic resin (POM).	
V37..B	Banjo BSP with knob adjustment and push-in fitting. Bi-directional. In acetalic resin (POM).	



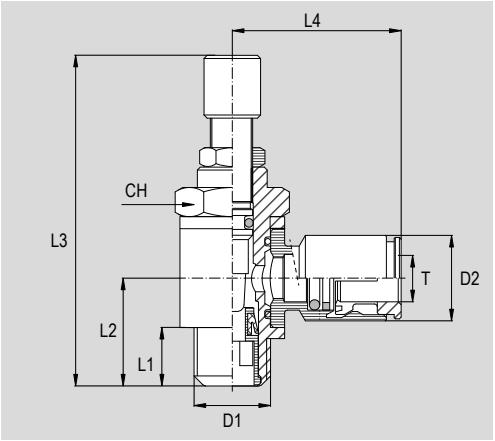

Dimensions

Code	Item	Symbol (function)	T (Øe tube)	D1	D2	L1	L2	L3 (max)	L4	CH	Weight (g)
024311	V37 04 M5C	(for cylinders)	4	M5x0,8	9,7	4	15,2	38,1	17,6	8	9
024312	V37 04 18C		4	G1/8"	9,7	5,1	23,7	42	19,1	14	23
024313	V37 06 M5C		6	M5x0,8	12	4	15,2	38,1	21,5	8	10
024314	V37 06 18C		6	G1/8"	12	5,1	23,7	42	22,7	14	25
024315	V37 06 14C		6	G1/4"	12	6,7	27,2	51	24,3	17	41
024316	V37 08 18C		8	G1/8"	14	5,1	23,7	42	23	14	25
024317	V37 08 14C		8	G1/4"	14	6,7	27,2	51	24,6	17	42
024318	V37 08 38C		8	G3/8"	14	7,4	31	63,5	26,5	20	70
024319	V37 10 14C		10	G1/4"	16	6,7	27,2	51	27	17	42
024320	V37 10 38C		10	G3/8"	16	7,4	31	63,5	28,5	20	71
024381	V37 04 M5V	(for valves)	4	M5x0,8	9,7	4	15,2	38,1	17,6	8	9
024382	V37 04 18V		4	G1/8"	9,7	5,1	23,7	42	19,1	14	23
024383	V37 06 M5V		6	M5x0,8	12	4	15,2	38,1	21,5	8	10
024384	V37 06 18V		6	G1/8"	12	5,1	23,7	42	22,7	14	25
024385	V37 06 14V		6	G1/4"	12	6,7	27,2	51	24,3	17	41
024386	V37 08 18V		8	G1/8"	14	5,1	23,7	42	23	14	25
024387	V37 08 14V		8	G1/4"	14	6,7	27,2	51	24,6	17	42
024388	V37 08 38V		8	G3/8"	14	7,4	31	63,5	26,5	20	70
024389	V37 10 14V		10	G1/4"	16	6,7	27,2	51	27	17	42
024390	V37 10 38V		10	G3/8"	16	7,4	31	63,5	28,5	20	71
024451	V37 04 M5B	(bi-directional)	4	M5x0,8	9,7	4	15,2	38,1	17,6	8	9
024452	V37 04 18B		4	G1/8"	9,7	5,1	23,7	42	19,1	14	23
024453	V37 06 M5B		6	M5x0,8	12	4	15,2	38,1	21,5	8	10
024454	V37 06 18B		6	G1/8"	12	5,1	23,7	42	22,7	14	25
024455	V37 06 14B		6	G1/4"	12	6,7	27,2	51	24,3	17	41
024456	V37 08 18B		8	G1/8"	14	5,1	23,7	42	23	14	25
024457	V37 08 14B		8	G1/4"	14	6,7	27,2	51	24,6	17	42
024458	V37 08 38B		8	G3/8"	14	7,4	31	63,5	26,5	20	70
024459	V37 10 14B		10	G1/4"	16	6,7	27,2	51	27	17	42
024460	V37 10 38B		10	G3/8"	16	7,4	31	63,5	28,5	20	71

Main features

Type	Description	Function
V19..C	Banjo BSPT with knob adjustment and push-in fitting. For cylinders. In acetalic resin (POM).	
V19..V	Banjo BSPT with knob adjustment and push-in fitting. For valves. In acetalic resin (POM).	
V19..B	Banjo BSPT with knob adjustment and push-in fitting. Bi-directional. In acetalic resin (POM).	



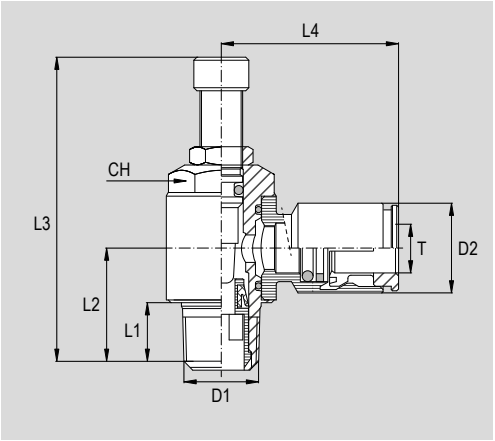

Dimensions

Code	Item	Symbol (function)	T (Øe tube)	D1	D2	L1	L2	L3 (max)	L4	CH	Weight (g)
024276	V19 04 18C	(for cylinders)	4	R1/8"	10	8,6	16,1	42	19,1	12	19
024277	V19 06 18C		6	R1/8"	12	8,6	16,1	42	22,7	12	19,4
024278	V19 06 14C		6	R1/4"	12	11,7	20,2	51	24,3	15	35,2
024279	V19 08 18C		8	R1/8"	14	8,6	16,1	42	23	12	19,7
024280	V19 08 14C		8	R1/4"	14	11,7	20,2	51	24,6	15	35,5
024281	V19 04 18V	(for valves)	4	R1/8"	10	8,6	16,1	42	19,1	12	19
024282	V19 06 18V		6	R1/8"	12	8,6	16,1	42	22,7	12	19,4
024283	V19 06 14V		6	R1/4"	12	11,7	20,2	51	24,3	15	35,2
024284	V19 08 18V		8	R1/8"	14	8,6	16,1	42	23	12	19,7
024285	V19 08 14V		8	R1/4"	14	11,7	20,2	51	24,6	15	35,5
024286	V19 04 18B	(bi-directional)	4	R1/8"	10	8,6	16,1	42	19,1	12	19
024287	V19 06 18B		6	R1/8"	12	8,6	16,1	42	22,7	12	19,4
024288	V19 06 14B		6	R1/4"	12	11,7	20,2	51	24,3	15	35,2
024289	V19 08 18B		8	R1/8"	14	8,6	16,1	42	23	12	19,7
024290	V19 08 14B		8	R1/4"	14	11,7	20,2	51	24,6	15	35,5

Main features

Type	Description	Function
V36..C	Swivel BSP with knob adjustment and push-in fitting. For cylinders. In acetalic resin (POM).	
V36..V	Swivel BSP with knob adjustment and push-in fitting. For valves. In acetalic resin (POM).	
V36..B	Swivel BSP with knob adjustment and push-in fitting. Bi-directional. In acetalic resin (POM).	



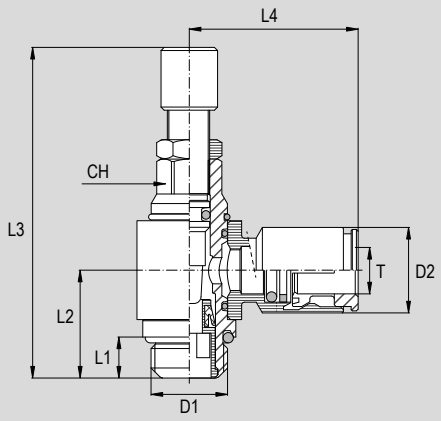

Dimensions

Code	Item	Symbol (function)	T (Øe tube)	D1	D2	L1	L2	L3 (max)	L4	CH	Weight (g)
024331	V36 04 M5C	(for cylinders)	4	M5x0,8	9,7	4	12	39,4	17,6	6	10
024332	V36 04 18C		4	G1/8"	9,7	5,2	15,1	41,9	19,1	9	20
024333	V36 06 M5C		6	M5x0,8	12	4	11,5	39,4	21,5	6	11
024334	V36 06 18C		6	G1/8"	12	5,2	15,1	41,9	22,7	9	21
024335	V36 06 14C		6	G1/4"	12	6,4	17,4	50,8	24,3	10	34
024336	V36 08 18C		8	G1/8"	14	5,2	14,9	41,9	23	9	23
024337	V36 08 14C		8	G1/4"	14	6,4	17,4	50,8	24,6	10	35
024340	V36 08 38C		8	G3/8"	14	7	20	63,5	26,5	14	72
024338	V36 10 14C		10	G1/4"	16	6,4	17,4	50,8	27	10	36
024339	V36 10 38C		10	G3/8"	16	7	20	63,5	28,5	14	73
024401	V36 04 M5V	(for valves)	4	M5x0,8	9,7	4	12	39,4	17,6	6	10
024402	V36 04 18V		4	G1/8"	9,7	5,2	15,1	41,9	19,1	9	20
024403	V36 06 M5V		6	M5x0,8	12	4	11,5	39,4	21,5	6	11
024404	V36 06 18V		6	G1/8"	12	5,2	15,1	41,9	22,7	9	21
024405	V36 06 14V		6	G1/4"	12	6,4	17,4	50,8	24,3	10	34
024406	V36 08 18V		8	G1/8"	14	5,2	14,9	41,9	23	9	23
024407	V36 08 14V		8	G1/4"	14	6,4	17,4	50,8	24,6	10	35
024409	V36 08 38V		8	G3/8"	14	7	20	63,5	26,5	14	72
024408	V36 10 14V		10	G1/4"	16	6,4	17,4	50,8	27	10	36
024410	V36 10 38V		10	G3/8"	16	7	20	63,5	28,5	14	73
024481	V36 04 M5B	(bi-directional)	4	M5x0,8	9,7	4	12	39,4	17,6	6	10
024482	V36 04 18B		4	G1/8"	9,7	5,2	15,1	41,9	19,1	9	20
024483	V36 06 M5B		6	M5x0,8	12	4	11,5	39,4	21,5	6	11
024484	V36 06 18B		6	G1/8"	12	5,2	15,1	41,9	22,7	9	21
024485	V36 06 14B		6	G1/4"	12	6,4	17,4	50,8	24,3	10	34
024486	V36 08 18B		8	G1/8"	14	5,2	14,9	41,9	23	9	23
024487	V36 08 14B		8	G1/4"	14	6,4	17,4	50,8	24,6	10	35
024489	V36 08 38B		8	G3/8"	14	7	20	63,5	26,5	14	72
024488	V36 10 14B		10	G1/4"	16	6,4	17,4	50,8	27	10	36
024500	V36 10 38B		10	G3/8"	16	7	20	63,5	28,5	14	73

Notes

Flow and exhaust regulators
Silenced exhaust restrictors



Code key

Series	Type*	Thread*	Option**
A	**VS**	**18**	**N**

Series	Type*	Thread*	Option**
A	VE	05 = M5	N = Fully nickel-plated
	VS	18 = 1/8"	
	VL	14 = 1/4"	
	VT	38 = 3/8"	
	VC	12 = 1/2"	
	R07	34 = 3/4"	
		01 = 1"	

How to order

Series	Type	Thread	Option
A	**VE**	**14**	**N**

Notes

For standard materials see the table below.

* For matching between type and thread, see page 4.97.2; for specific type see the following page.

** Not available for type AR07.

Technical data

Type	AVE, AVS, AVL, AVC, AVT, AR07
Fluid	Compressed air
Pressure range	0 ÷ 10 bar
Temperature range	-20°C ÷ +70°C
Parallel threads	UNI - ISO 228 / 1 (BSP)
Metric threads	UNI EN ISO 965-1

Standard materials

Type	AVE	AVS	AVL	AVC	AVT	AR07
Body	Brass			Nickel-plated brass		Nylon (PA6)
Filtering element	Sintered bronze 36 µ					Polyethylene
Spring	Stainless Steel					
Seals	NBR					

Silenced exhaust restrictors

Type			Functions	Parallel threads (BSP)	Metric threads	Data sheet and code page
AVE	Manual silenced exhaust restrictors, with external spring and right adjustment. In brass and sintered bronze.		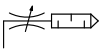	1/8", 1/4", 3/8", 1/2", 3/4", 1"	-	4.97.3
AVS	Manual silenced exhaust restrictors, with internal spring and left adjustment. In brass and sintered bronze.		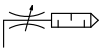	1/8", 1/4", 3/8", 1/2"	-	4.97.3
AVL	Manual silenced exhaust restrictors, with screwdriver adjustment and high flow. In brass and sintered bronze.		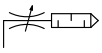	1/8", 1/4", 3/8", 1/2", 3/4", 1"	M5x0,8	4.97.4
AVT	Manual silenced exhaust restrictors, with internal spring. In nickel-plated brass and sintered bronze.		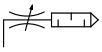	1/8", 1/4", 1/2"	-	4.97.4
AVC	Manual silenced exhaust restrictors, with screwdriver adjustment. In nickel-plated brass and sintered bronze.		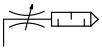	1/8", 1/4", 3/8"	M5x0,8	4.97.5
AR07	Manual silenced exhaust restrictors, with screwdriver adjustment. In plastic material.		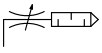	1/8", 1/4", 3/8", 1/2"	-	4.97.5

Main features

Type	Description	Function
AVE	Manual silenced exhaust restrictors, with external spring and right adjustment. In brass and sintered bronze.	



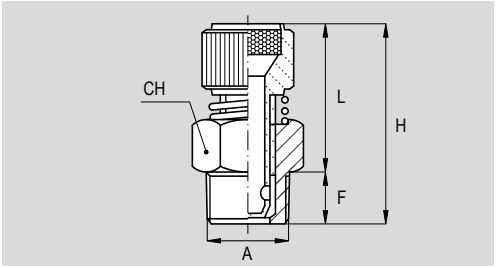

Dimensions

Code	Item	Symbol (function)	A	CH	F	L (min)	L (max)	H (min)	H (max)	Weight (g)
023501	AVE18	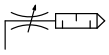	G1/8"	13	6	20	22	26	28	-
023502	AVE14		G1/4"	15	8	22	24	30	32	-
023503	AVE38		G3/8"	18	10	25	28	35	38	-
023504	AVE12		G1/2"	22	11	26	29	36	39	-
023505	AVE34		G3/4"	30	12	32	37	45	50	-
023506	AVE01		G1"	36	12	32	37	45	50	-

Main features

Type	Description	Function
AVS	Manual silenced exhaust restrictors, with internal spring and left adjustment. In brass and sintered bronze.	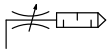



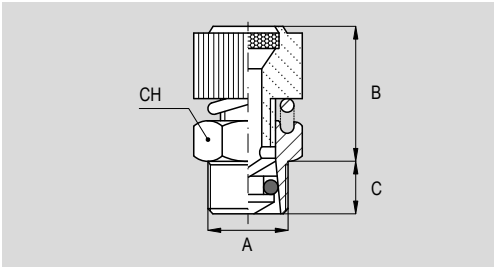

Dimensions

Code	Item	Symbol (function)	A	B (min)	B (max)	C	CH	Weight (g)
023521	AVS18	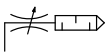	G1/8"	14	19	6	13	-
023522	AVS14		G1/4"	17	22	8	16	-
023523	AVS38		G3/8"	18	24	9	20	-
023524	AVS12		G1/2"	18	24	10,5	26	-

Main features

Type	Description	Function
AVL	Manual silenced exhaust restrictors, with screwdriver adjustment and high flow. In brass and sintered bronze.	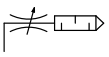



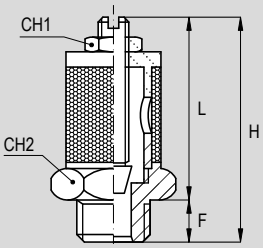

Dimensions

Code	Item	Symbol (function)	A	F	CH1	CH2	L (min)	L (max)	H (min)	H (max)	Weight (g)
023547	AVL05	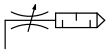	M5x0,8	3,5	6	8	13	18	16	21	-
023541	AVL18		G1/8”	8	10	16	20	22	26	28	-
023542	AVL14		G1/4”	9	10	16	22	24	30	32	-
023543	AVL38		G3/8”	10	10	22	25	28	35	38	-
023544	AVL12		G1/2”	11	10	22	26	29	36	39	-
023545	AVL34		G3/4”	11	13	30	32	37	45	50	-
023546	AVL01		G1”	11	13	36	32	37	45	50	-

Main features

Type	Description	Function
AVT	Manual silenced exhaust restrictors, with internal spring. In nickel-plated brass and sintered bronze.	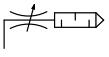



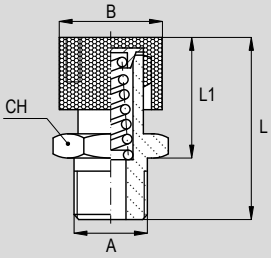

Dimensions

Code	Item	Symbol (function)	A	B	L (max)	L1 (min)	L1 (max)	CH	Weight (g)
023561	AVT18	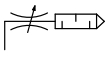	G1/8”	14	29	16	21	14	-
023562	AVT14		G1/4”	17	33	17	24	17	-
023564	AVT12		G1/2”	26	43	25	31	26	-

Main features

Type	Description	Function
AVC	Manual silenced exhaust restrictors, with screwdriver adjustment. In nickel-plated brass and sintered bronze.	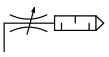



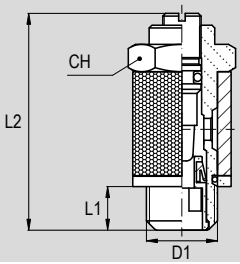

Dimensions

Code	Item	Symbol (function)	D1	L1	L2 (max)	CH	Weight (g)
023571	AVCM5	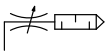	M5x0,8	3	25	8	6
023572	AVC18		G1/8”	4,9	31,7	14	27,1
023573	AVC14		G1/4”	6,4	39,5	17	50,6
023574	AVC38		G3/8”	6,7	50	20	92,9

Main features

Type	Description	Function
AR07	Manual silenced exhaust restrictors, with screwdriver adjustment. In plastic material.	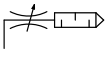



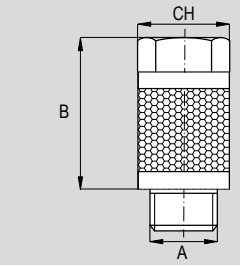

Dimensions

Code	Item	Symbol (function)	A	B	CH	Weight (g)
023531	AR0718	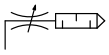	G1/8”	15	13	-
023532	AR0714		G1/4”	22	15	-
023533	AR0738		G3/8”	30,4	20	-
023534	AR0712		G1/2”	40,2	25	-

Notes

Flow and exhaust regulators
Exhaust restrictors





Code key

Series	Type*	Thread 1*	Thread 2**
A	**SN**	**18**	**18**

Series	Type*	Thread 1* / Thread 2**
A	SN	18 = 1/8"
	SE	14 = 1/4"
	R	38 = 3/8"
		12 = 1/2"

How to order type ASE-AR

Series	Type	Thread
A	**SE**	**18**

How to order type ASN

Series	Type	Thread 1	Thread 2
A	**SN**	**18**	**18**

Notes

For standard materials see the table below.

* For matching between type and thread, see page 4.99.2; for specific type see the following page.

** Only for type ASN

Technical data

Type	ASN, ASE, AR
Fluid	Compressed air
Pressure range	0 ÷ 10 bar
Temperature range	-20°C ÷ +70°C
Parallel threads	UNI - ISO 228 / 1 (BSP)

Standard materials

Type	ASN	ASE	AR
Body	Nickel-plated brass		
Adjustment needle	Nickel-plated brass		

Exhaust restrictors

Type			Functions	Parallel threads (BSP)	Data sheet and code page
ASN	Exhaust restrictor, bi-directional, female threaded, for mounting the silencer. In nickel-plated brass.			1/8", 1/4", 3/8", 1/2"	4.99.3
ASE	Exhaust restrictor, bi-directional, with maual adjustment and high flow. In nickel-plated brass.			1/8", 1/4"	4.99.3
AR	Exhaust restrictor, bi-directional, with manual shut off. In nickel-plated brass.			1/8", 1/4", 3/8"	4.99.4

Matching thread series ASN

Thread 1	Thread 2			
	G1/8"	G1/4"	G3/8"	G1/2"
G1/8"	●	-	-	-
G1/4"	●	-	-	-
G3/8"	-	●	-	-
G1/2"	-	●	●	-

Matching thread series ASE - AR

Type	Thread 1			
	G1/8"	G1/4"	G3/8"	G1/2"
ASE	●	●	-	-
AR	●	●	●	-

Key
● available matching; - not available matching

Main features

Type	Description	Function
ASN	Exhaust restrictor, bi-directional, female threaded, for mounting the silencer. In nickel-plated brass.	



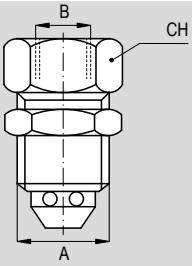

Dimensions

Code	Item	Symbol (function)	A	B	CH	Weight (g)
023581	ASN1818	 (bi-directional)	G1/8"	G1/8"	15	-
023582	ASN1418		G1/4"	G1/8"	19	-
023583	ASN3814		G3/8"	G1/4"	20	-
023584	ASN1214		G1/2"	G1/4"	20	-
023585	ASN1238		G1/2"	G3/8"	26	-

Main features

Type	Description	Function
ASE	Exhaust restrictor, bi-directional, with manual adjustment and high flow. In nickel-plated brass.	



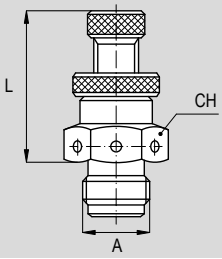

Dimensions

Code	Item	Symbol (function)	A	L	CH	Weight (g)
023621	ASE18	 (bi-directional)	G1/8"	18	14	-
023622	ASE14		G1/4"	22	17	-

Main features

Type	Description	Function
AR	Exhaust restrictor, bi-directional, with manual shut off. In nickel-plated brass.	



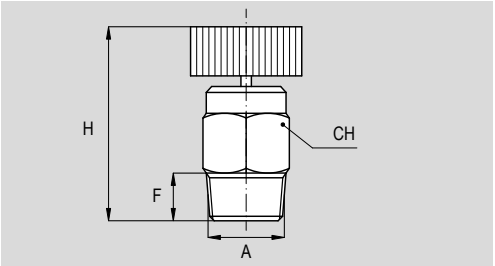

Dimensions

Code	Item	Symbol (function)	A	F	H	CH	Weight (g)
023633	AR18B	 (bi-directional)	G1/8”	8	28	14	-
023634	AR14B		G1/4”	9	27	14	-
023635	AR38B		G3/8”	9	24	17	-

ACCESSORIES
with integrated function



Find out our
key products

- **Solution for most applications**
- **Easy and intuitive choice**
- **Excellent value for money**
- **Wide availability**
- **Fast delivery**

Main features and certifications

Accessories with integrated function. Available in different versions, functions, and threads.
Supplied as standard in compliance to Reach and RoHS directives.

Fittings with non return valve type V56

from page 4.121.10



Series of parallel (BSP) push-in fittings in nickel-plated brass with non-return valve. Available in sizes from M5 to G1/2", tube from Ø 4 to Ø 14.



Stop fittings type V59

from page 4.121.20



Series of parallel (BSP) push-in fittings in nickel-plated brass with poppet. Available in sizes G1/8" and G1/4", tube Ø 6 and Ø 8.

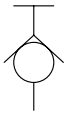

Pressure regulators type V47

from page 4.122.10



Series of pressure regulators in nickel-plated brass. Available in sizes G1/8" and G1/4". Compatible with banjo fittings.



Uni-directional pressure regulators type V57 e V58

from page 4.122.20



Series uni-directional pressure regulators in acetalic resin (POM) with reduced dimensions and micro-pressure-gauge. Available in two versions: in-line version (V57) for tube Ø 6 and Ø 8, and 90° version (V58), for tube from Ø 4 to Ø 8 with M5, R1/8" and R1/4" threads.



Pneumatic switches type V46

from page 4.123.10



Series of pneumatic switches in nickel-plated brass. Available in 2 ways and 3 ways versions, sizes G1/8" and G1/4". Compatible with banjo fittings.

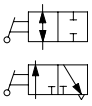

In-line pneumatic switches type V48

from page 4.123.20



Series of in-line pneumatic switches in acetalic resin. Available in 2 ways and 3 ways versions, sizes Ø 6 and Ø 8.

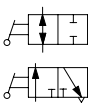

Circuit selectors type V60

from page 4.124.10



Series of circuit selectors in anodized aluminium. Available with connections G1/8” and G1/4”.



In-line pressure-gauges type V51

from page 4.125.10



Series of In-line pressure-gauges with reduced dimensions, in acetalic resin. Available in configuration with push-in fittings connections Ø 6 and Ø 8, or with threaded connections G1/8" and G1/4" in and push-in fittings connection Ø 6 or Ø 8 out.



Adjustable pressure switches type PR

from page 4.126.10



Series of adjustable pressure switches in brass, with rubber cover cap. Availabe in size G1/8", in version "Normally oper" or "Normally closed", and in size G1/4" in version "Normally closed".



Stop valves type V45

from page 4.127.10



Series of stop valves in nickel-plated brass. Available in versions uni-directional and bi-directional, in size from G1/8" to G1/2". Compatible with banjo fittings.

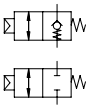

Uni-directional throttle fittings type V44

from page 4.128.10



Series of uni-directional throttle fittings with fixed section and elbow push-in fitting in nickel-plated brass. Available in sizes from M5 to G1/4", for tube from Ø 4 to Ø 8, with calibrated hole from Ø 0,2 mm to Ø 1,5 mm



Slow starters type V61

from page 4.129.10



Series of slow starters in nickel-plated brass. Available in sizes from G1/4" to G1/2".

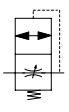

Threshold sensors type V62

from page 4.130.10



Series of threshold sensors in nickel-plated brass.Available in sizes from G1/8" to G3/8", for tube Ø 4.

Code key

Series	Type[1]	Thread or Tube[2]	Thread or Tube[2]	Function	Option
V	**45**	**00**	**14**	**B**	**K**

Series

- V
- PR

Type[1]

- 56
- 59
- 47
- 57
- 58
- 46
- 48
- 60
- 51
- 45
- 44
- 61
- 62

Thread or Tube[2]

- M5 = M5x0,8
- 18 = 1/8"
- 14 = 1/4"
- 38 = 3/8"
- 12 = 1/2"

Thread or Tube[2]

- 00 = -
- 04 = Ø 4
- 06 = Ø 6
- 08 = Ø 8
- 10 = Ø 10
- 12 = Ø 12
- 14 = Ø 14

Function

- A[3] = Normally open
- C[3] = Normally closed
- U[4] = Uni-directional
- B[4] = Bi-directional
- 2V[5] = 2 ways
- 3V[5] = 3 ways
- ...[6] = Ø calibred hole

Option

- -
- K[4] = With recessed push-button for manual override reset

Notes

For specific type see the following pages. For standard materials see the data sheet of single components.

(1) Only for series V

(2) For matching between type, tube and thread, see the following pages.

(3) Only for type PR

(4) Only for type V45

(5) Only for type V46 and V48

(6) Only for type V44. For diameters see table at page 4.128.10

How to order series V

Series	Type	Tube	Thread
V	**56**	**06**	**14**

How to order series PR

Series	Size	Function
PR	**18**	**A**

How to order type V45

Series	Type	Tube	Thread	Function	Option
V	**45**	**00**	**14**	**B**	**K**

How to order type V46 and V48

Series	Type	Tube	Thread	Function
V	**46**	**00**	**14**	**2V**

How to order type V44

Series	Type	Tube	Thread	Hole Ø
V	**44**	**06**	**18**	**0,3**

Accessories with integrated function

Fittings with non return valve

Main features

Type	Description	Symbol
V56	BSP stud push-in fitting with non return valve. In nickel-plated brass.	



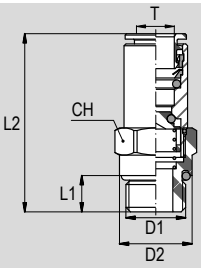

Dimensions

Code	Item	Symbol	T (Øe tube)	D1	D2	L1	L2	CH	Weight (g)
024490	V5604M5		4	M5x0,8	8	4	37,2	9	10
024491	V560418		4	G1/8”	13	6	30,9	11	13
024492	V560618		6	G1/8”	13	6	38	13	18
024493	V560614		6	G1/4”	16	8	39	14	26
024494	V560818		8	G1/8”	13	6	38,5	15	23
024495	V560814		8	G1/4”	16	8	39,5	16	27
024496	V561014		10	G1/4”	16	8	44	18	36
024497	V561038		10	G3/8”	20	9	43,5	18	42
024498	V561212		12	G1/2”	25	10	46,5	22	68
024499	V561412		14	G1/2”	25	10	54,7	25	90

Function

The non-return valve have the function of allowing the free flow in one direction (from the tube towards the thread), while it intercepts the flow coming from the thread in the direction of the tube.

Technical data

Type	V56
Fluid	Compressed air
Pressure range	2 ÷ 10 bar
Minimum working pressure	0,2 bar
Temperature range	-20°C ÷ +80°C
Parallel threads	UNI - ISO 228 / 1 (BSP)
Metric threads	UNI EN ISO 965-1
Tubes	Calibrated Nylon (PA6), Polyurethane (PU) and Rilsan (PA11).
Tubes tolerance	±0,05 mm

Standard materials

Type	V56
Body	Nickel-plated brass
Release collar	Nickel-plated brass
Valve	Nickel-plated brass
Collet and spring	Stainless Steel
Seals	NBR

Main features

Type	Description	Symbol
V59	BSP stud push-in fitting , with poppet. In nickel-plated brass.	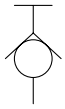



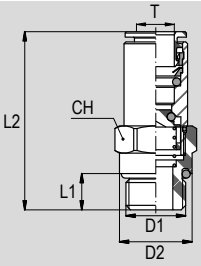

Dimensions

Code	Item	Symbol	T (Øe tube)	D1	D2	L1	L2	CH	Weight (g)
024470	V590618	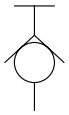	6	G1/8"	13,5	5	27,7	12	14,9
024471	V590614		6	G1/4"	16	6,5	27,7	12	18
024472	V590818		8	G1/8"	14,5	5	27,9	13	17
024473	V590814		8	G1/4"	16	6,5	27,9	13	20,4

Function

The poppet inside the component is unlocked only if a tube is inserted, thus allowing air to flow from the thread to the tube, and only allow this as long as the tube remains inserted. If, for any reason, the tube were disconnected, the flow of air through the fitting would stop as poppet close.

Technical data

Type	V59
Fluid	Compressed air
Pressure range	0 ÷ 10 bar
Temperature range	-20°C ÷ +80°C
Parallel threads	UNI - ISO 228 / 1 (BSP)
Tubes	Calibrated Nylon (PA6), Polyurethane (PU) and Rilsan (PA11).
Tubes tolerance	±0,05 mm

Standard materials

Type	V59
Body	Nickel-plated brass
Release collar	Nickel-plated brass
Poppet	Nickel-plated brass
Collet and spring	Stainless Steel
Seals	NBR

Accessories with integrated function
Pressure regulators

Main features

Type	Description	Symbol
V47	Pressure regulators. In nickel-plated brass.	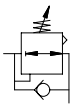



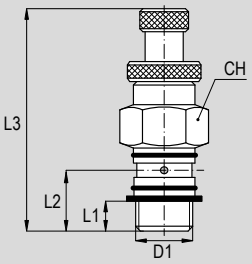

Dimensions

Code	Item	Symbol	D1	L1	L2	L3 (max)	CH	Weight (g)
030127	V470018		G1/8"	6,2	15,5	56,8	15	33,6
030140	V470014		G1/4"	8,2	18,5	62,9	17	54

Technical data

Type	V47	
Size	1/8"	1/4"
Fluid	Compressed air	
Pressure range (IN)	0 ÷ 10 bar	
Regulation range	0 ÷ 8 bar	
Temperature range	-20°C ÷ +80°C	
Parallel threads	UNI - ISO 228 / 1 (BSP)	
Function	See page 4.122.11	
Matching with banjo fittings	See page 4.122.11	
Flow at 6 bar with ΔP 1 bar	205 Nl/min	290 Nl/min

Standard materials

Type	V47
Body	Nickel-plated brass
Spring	Stainless Steel AISI 302
Seals	NBR

Function

Type V47



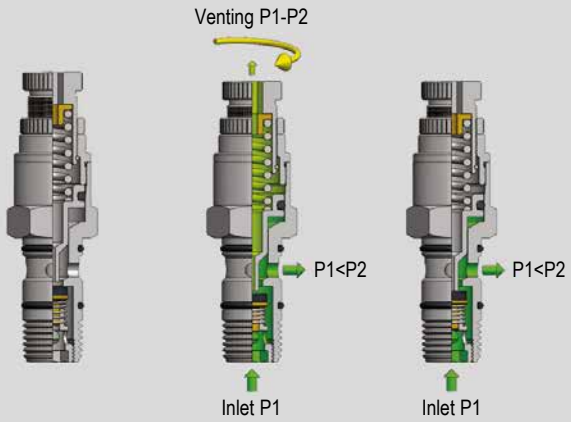

Pressure regulators, installed in a pneumatic system, allow the adjustment of specific connected equipment working pressure, maintaining this regulation constant in time. Particularly interesting is the application as an energy saver, which is achieved by connecting the regulator between the valve and the cylinder. This way, is possible to reduce pressure in one desired direction, thus limiting air consumption of the cylinder.

Matching with banjo series R



Code	Item	For thread	Tube ext.Ø
020733	R 35 04 18	1/8"	4
020736	R 35 06 18	1/8"	6
020737	R 35 06 14	1/4"	6
020738	R 35 08 18	1/8"	8
020739	R 35 08 14	1/4"	8
020741	R 35 10 14	1/4"	10

Matching with banjo series RT



Code	Item	For thread	Tube ext.Ø
029392	RT 28 04 18	1/8"	4
029393	RT 28 06 18	1/8"	6
029394	RT 28 06 14	1/4"	6
029395	RT 28 08 18	1/8"	8
029396	RT 28 08 14	1/4"	8
029398	RT 28 10 14	1/4"	10

Matching with banjo series C



Code	Item	For thread	Tube ext.Ø
021318	C 23 04 18	1/8"	4
021303	C 23 05 18	1/8"	5
021306	C 23 06 18	1/8"	6
021307	C 23 06 14	1/4"	6
021308	C 23 08 18	1/8"	8
021309	C 23 08 14	1/4"	8
021311	C 23 10 14	1/4"	10

Matching with banjo series O



Code	Item	For thread	Tube ext.Ø
022056	O 25 06 18	1/8"	6
022057	O 25 06 14	1/4"	6
022058	O 25 08 18	1/8"	8
022059	O 25 08 14	1/4"	8

Matching with banjo series A



Code	Item	For thread	Thread
022871	A042 18 18	1/8"	1/8"
022872	A042 14 14	1/4"	1/4"

Accessories with integrated function
Uni-directional pressure regulators

Main features

Type	Description	Symbol
V57	Uni-directional in-line pressure regulators, with push-in fitting connections. In acetalic resin (POM).	



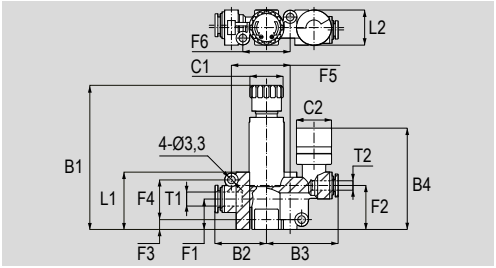

Dimensions

Code	Item	Symbol	T1 (Øe tube1)	T2 (Øe tube2)	B1 min	B1 max	B2	B3	B4	L1	L2	C1	C2	F1	F2	F3	F4	F5	F6	Weight (g)
024357	V570404		4	4	59	61,6	21,6	30,6	43,3	24,5	15	14,2	15	13	18,8	4,2	17	30	20,2	23
024358	V570606		6	6	59	61,6	22	31	43,3	24,5	15	14,2	15	13	18,8	4,2	17	30	20,2	23
024359	V570808		8	8	63,1	65,7	28,6	32,9	49,8	28,4	19	14,2	15	15	22,5	4,1	21,3	39,7	23,2	36

Function

Uni-directional pressure regulators, with extremely reduced overall dimensions, supplied complete with a micro-pressure-gauge (MPa scale), to be used when is necessary to reduce the working pressure directed to a specific component.
To adjust the pressure, is necessary to unlock the adjustment knob (C1) by lifting it upwards. Turn the knob clockwise to increase pressure, or counter-clockwise to decrease pressure. Once reaching the desired pressure, visible through the built-in pressure-gauge, lock the knob again by pushing it downwards.

Technical data

Type	V57
Fluid	Compressed air
Pressure range	1 ÷ 8 bar
Temperature range	0°C ÷ +60°C
Tubes	Calibrated Nylon (PA6), Polyurethane (PU) and Rilsan (PA11).
Tubes tolerance	±0,05 mm

Standard materials

Type	V57
Body	Acetalic resin (POM)
Collet	Stainless Steel
Seals	NBR

Accessories with integrated function

Uni-directional pressure regulators

Main features

Type	Description	Symbol
V58	Uni-directional 90° pressure regulators, with "in" BSPT threaded connection and "out" push-in fitting. In acetalic resin (POM).	



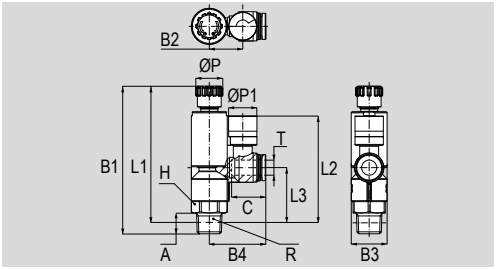

Dimensions

Code	Item	Symbol	T (Øe tube)	R	A	B1 min	B1 max	B2	B3	B4	L1 min	L1 max	L2	L3	ØP	ØP1	C	H	Weight (g)
024462	V5804M5		4	M5x0,8	3	67,4	70	16,2	15	26,3	64,4	67	48,7	24,2	14,2	15	11	14	29
024463	V580418		4	R1/8"	8	68,9	71,5	16,2	15	26,3	64,9	67,5	49,2	24,7	14,2	15	11	14	29
024464	V5806M5		6	M5x0,8	3	67,4	70	16,2	15	26,7	64,4	67	48,7	24,2	14,2	15	11,6	14	29
024465	V580618		6	R1/8"	8	68,9	71,5	16,2	15	26,7	64,9	67,5	49,2	24,7	14,2	15	11,6	14	29
024466	V580614		6	R1/4"	11	75,6	78,2	17,7	19	30	69,6	72,2	56,3	29	14,2	15	17	17	49
024467	V580818		8	R1/8"	8	68,9	71,5	16,2	15	28,4	64,9	67,5	52	24,7	14,2	15	18,1	14	31
024468	V580814		8	R1/4"	11	75,6	78,5	17,7	19	29,9	69,6	72,2	56,3	29	14,2	15	18,1	17	49

Function

Uni-directional pressure regulators, with extremely reduced overall dimensions, supplied complete with a micro-pressure-gauge (MPa scale), to be used when is necessary to reduce the working pressure directed to a specific component.
To adjust the pressure, is necessary to unlock the adjustment knob (C1) by lifting it upwards. Turn the knob clockwise to increase pressure, or counter-clockwise to decrease pressure. Once reaching the desired pressure, visible through the built-in pressure-gauge, lock the knob again by pushing it downwards.

Technical data

Type	V58
Fluid	Compressed air
Pressure range	1 ÷ 8 bar
Temperature range	0°C ÷ +60°C
Taper threads	UNI EN 10226-1 (BSPT)
Metric threads	UNI EN ISO 965-1
Tubes	Calibrated Nylon (PA6), Polyurethane (PU) and Rilsan (PA11).
Tubes tolerance	±0,05 mm

Standard materials

Type	V58
Body	Acetalic resin (POM)
Metal thread	Nickel-plated brass
Collet	Stainless Steel
Seals	NBR

Accessories with integrated function
Pneumatic switches

Main features

Type	Description	Symbol
V46..2V	2 ways pneumatic switch. In nickel-plated brass.	
V46..3V	3 ways pneumatic switch. In nickel-plated brass.	



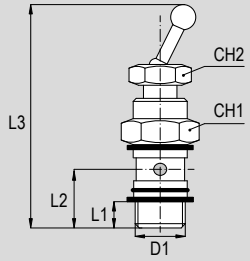

Dimensions

Code	Item	Symbol	D1	L1	L2	L3	CH1	CH2	Weight (g)
030125	V4600182V	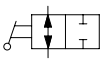	G1/8"	6,5	15,9	54,8	14	15	25
030165	V4600142V		G1/4"	8	18,7	59,8	17	15	41
030166	V4600183V	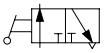	G1/8"	6,5	15,9	54,8	14	15	25
030167	V4600143V		G1/4"	8	18,7	59,8	17	15	41

Technical data

Type	V46	
Size	1/8"	1/4"
Fluid	Compressed air	
Pressure range	0 ÷ 15 bar	
Temperature range	-20°C ÷ +80°C	
Parallel threads	UNI - ISO 228 / 1 (BSP)	
Function	See page 4.123.11	
Matching with banjo fittings	See page 4.123.11	
Flow at 6 bar with ΔP 1 bar	235 Nl/min	265 Nl/min

Standard materials

Type	V46
Body	Nickel-plated brass
Spring	Stainless Steel AISI 302
Washer	Nylon (PA6)
Seals	NBR

Function

Type V46..2V, 2/2
(2 ways)

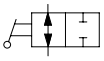

Type V46..3V, 3/2
(3 ways)

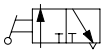

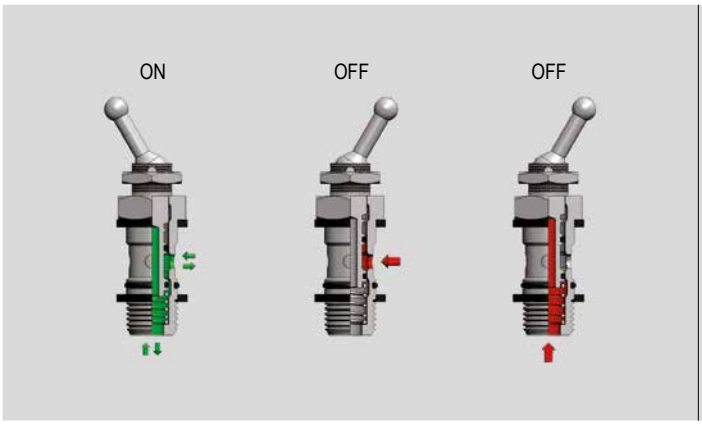

Pneumatic switches are valves with the function of selecting a circuit (ON/OFF) simply by operating the control lever. Using the 3-way valve, the circuit downstream of the switch is not only disconnected, but also discharged into the atmosphere.

Matching with banjo series R



Code	Item	For thread	Tube ext.Ø
020733	R 35 04 18	1/8"	4
020736	R 35 06 18	1/8"	6
020737	R 35 06 14	1/4"	6
020738	R 35 08 18	1/8"	8
020739	R 35 08 14	1/4"	8
020741	R 35 10 14	1/4"	10

Matching with banjo series RT



Code	Item	For thread	Tube ext.Ø
029392	RT 28 04 18	1/8"	4
029393	RT 28 06 18	1/8"	6
029394	RT 28 06 14	1/4"	6
029395	RT 28 08 18	1/8"	8
029396	RT 28 08 14	1/4"	8
029398	RT 28 10 14	1/4"	10

Matching with banjo series C



Code	Item	For thread	Tube ext.Ø
021318	C 23 04 18	1/8"	4
021303	C 23 05 18	1/8"	5
021306	C 23 06 18	1/8"	6
021307	C 23 06 14	1/4"	6
021308	C 23 08 18	1/8"	8
021309	C 23 08 14	1/4"	8
021311	C 23 10 14	1/4"	10

Matching with banjo series O



Code	Item	For thread	Tube ext.Ø
022056	O 25 06 18	1/8"	6
022057	O 25 06 14	1/4"	6
022058	O 25 08 18	1/8"	8
022059	O 25 08 14	1/4"	8

Matching with banjo series A



Code	Item	For thread	Thread
022871	A042 18 18	1/8"	1/8"
022872	A042 14 14	1/4"	1/4"

Accessories with integrated function
In-line pneumatic switches

Main features

Type	Description	Symbol
V48..2V	2 ways in-line pneumatic switch. In acetalic resin (POM).	
V48..3V	3 ways in-line pneumatic switch. In acetalic resin (POM).	



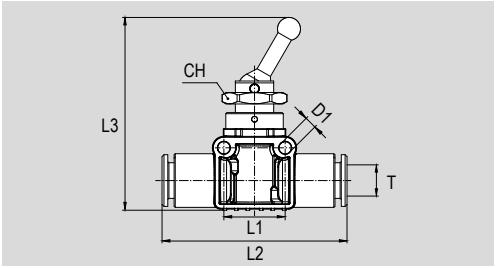

Dimensions

Code	Item	Symbol	T (Øe tube)	D1	L1	L2	L3	CH	Weight (g)
030172	V4800062V	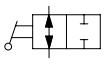	6	3,2	16	47	48,8	15	30,5
030173	V4800082V		8	3,2	16	48	50,3	15	32
030164	V4800063V	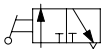	6	3,2	16	47	48,8	15	30,5
030163	V4800083V		8	3,2	16	48	50,3	15	32

Function

Pneumatic switches are valves with the function of selecting a circuit (ON/OFF) simply by operating the control lever. Using the 3-way valve, the circuit downstream of the switch is not only disconnected, but also discharged into the atmosphere.

Technical data

Type	V48	
Size	Ø 6	Ø 8
Fluid	Compressed air	
Pressure range	0 ÷ 15 bar	
Temperature range	-20°C ÷ +70°C	
Tubes	Calibrated Nylon (PA6), Polyurethane (PU) and Rilsan (PA11)	
Tubes tolerance	±0,05 mm	
Flow at 6 bar with ΔP 1 bar	185 Nl/min	190 Nl/min

Standard materials

Type	V48
Body	Acetalic resin (POM)
Lever	Nickel-plated brass
Spring	Stainless Steel AISI 302
Fitting	Series RT (see page 4.7.1)
Seals	NBR

Main features

Type	Description	Symbol
V60	Circuit selectors. In anodized aluminium.	



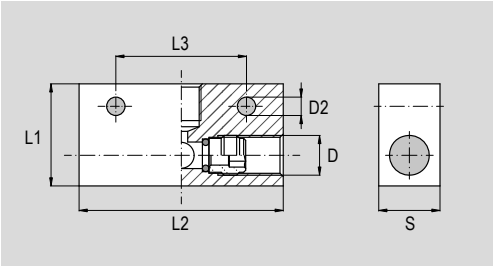

Dimensions

Code	Item	Symbol	D	D2	L1	L2	L3	S	Weight (g)
024348	V601818		G1/8"	4,5	25	50	32	15	57,4
024349	V601414		G1/4"	5,5	30	52	35	20	74

Technical data

Type	V60
Fluid	Compressed air
Pressure range	0,5 ÷ 10 bar
Temperature range	-20°C ÷ +70°C
Parallel threads	UNI - ISO 228 / 1 (BSP)
Function	See page 4.124.11
Flow	See page 4.124.11

Standard materials

Type	V60
Body	Anodized aluminium
Bush	Brass
Sphere	Steel AISI 420
Seals	NBR

Function

Type V60 

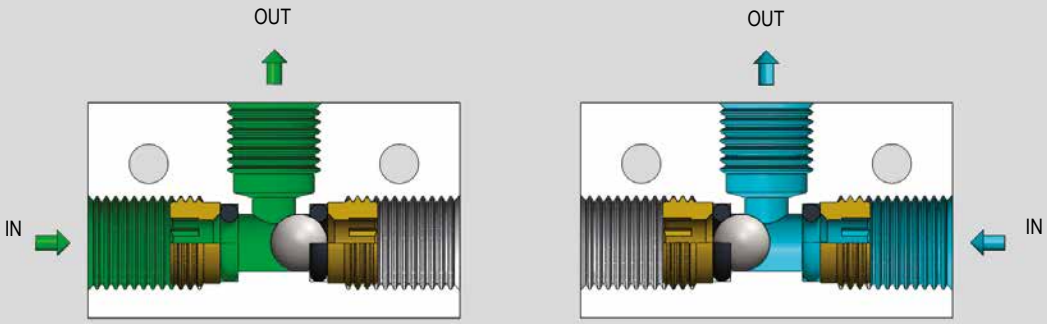

Circuit selectors are used when is required to convey two pneumatic flows from two different tubes into one without these to interferring with each other. Sending air in one of the two "in" orifices exclude the other.

Flow diagram

P = 6 bar, with ΔP 1 bar

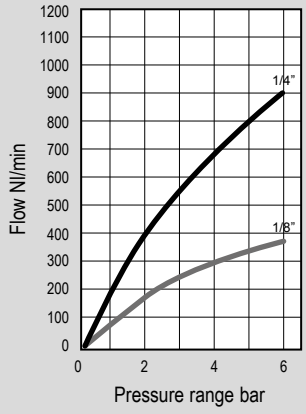

Main features

Type	Description	Symbol
V51	In-line pressure-gauges with push-in connections. In acetalic resin (POM).	



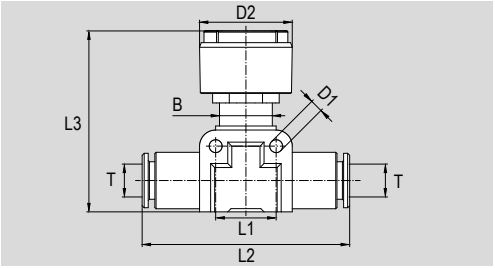

Dimensions

Code	Item	Symbol	T (Øe tube)	B	D1	D2	L1	L2	L3	Weight (g)
030174	V510606		6	14	3,2	23	16	47	45,1	-
030177	V510808		8	14	3,2	23	16	48	46,6	-

Function

These in-line pressure gauges with extremely reduced overall dimensions allow to check the actual pressure in the specific area where they are installed.

Technical data

Type	V51	
Size	Ø 6	Ø 8
Fluid	Compressed air	
Pressure range	0 ÷ 10 bar	
Temperature range	0°C ÷ +70°C	
Tubes	Calibrated Nylon (PA6), Polyurethane (PU) and Rilsan (PA11)	
Tubes tolerance	±0,05 mm	

Standard materials

Type	V51
Body	Acetalic resin (POM)
Pressure-gauge	ABS
Pressure-gauge seat	Metal
Fitting	Series RT (see page 4.7.1)
Seals	NBR

Accessories with integrated function

In-line pressure-gauges

Main features

Type	Description	Symbol
V51	In-line pressure-gauges with "in" BSP thread connection and "out" push-in fitting. In acetalic resin (POM).	



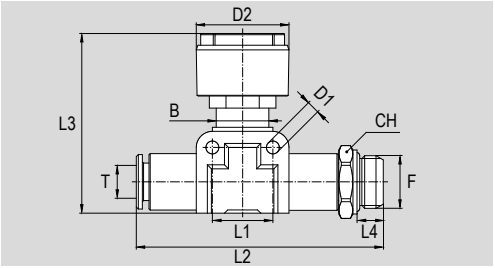

Dimensions

Code	Item	Symbol	T (Øe tube)	F (Thread)	B	D1	D2	L1	L2	L3	L4	CH	Weight (g)
030175	V510618		6	G1/8"	14	3,2	23	16	53	45,1	5	13	-
030176	V510614		6	G1/4"	14	3,2	23	16	55	45,1	6,5	16	-
030178	V510818		8	G1/8"	14	3,2	23	16	54	46,6	5	14	-
030179	V510814		8	G1/4"	14	3,2	23	16	56	46,6	6,5	16	-

Function

These in-line pressure gauges with extremely reduced overall dimensions allow to check the actual pressure in the specific area where they are installed.

Technical data

Type	V51			
Tube size	Ø 6		Ø 8	
Thread size	1/8"	1/4"	1/8"	1/4"
Fluid	Compressed air			
Pressure range	0 ÷ 10 bar			
Temperature range	0°C ÷ +70°C			
Parallel threads	UNI - ISO 228 / 1 (BSP)			
Tubes	Calibrated Nylon (PA6), Polyurethane (PU) and Rilsan (PA11)			
Tubes tolerance	±0,05 mm			

Standard materials

Type	V51
Body	Acetalic resin (POM)
Pressure-gauge	ABS
Pressure-gauge seat	Metal
Thread	Nickel-plated brass
Fitting	Series RT (see page 4.7.1)
Seals	NBR

Accessories with integrated function
Adjustable pressure switches

Main features

Type	Description	Symbol
PR..A	Adjustable pressure switches normally open	
PR..C	Adjustable pressure switches normally closed	



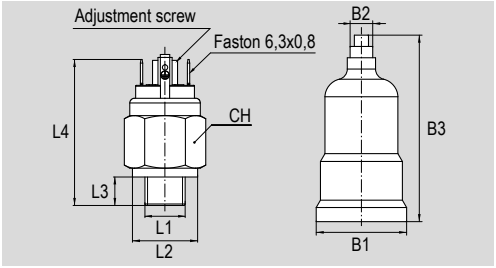

Dimensions

Code	Item	Symbol	L1	Ø L2	L3	L4	CH	Ø B1	Ø B2	B3	Weight (g)
024391	PR18A		G1/8"	22,2	10	51	24	32	5	66	65
024392	PR18C		G1/8"	22,2	10	51	24	32	5	66	65
024394	PR14C		G1/4"	22,2	10	51	24	32	5	66	65

Function

Adjustable pressure switches are designed to control the minimum and maximum pressure of compressed air in a pneumatic system or in a circuit. Are made with a NO/NC electrical contact capable of controlling an electrical load of 0.5A with a voltage of 250V. It is advisable to mount the pressure switch vertical to the line to control, in order to avoid collecting of impurities or condensate inside the body, which could block the regular operation or change the switching pressure. Through the adjustment screw, the value of the switching pressure can be recreated after removing the contact holder.

Technical data

Type	PR18A	PR18C	PR14C
Fluid	Filtered compressed air with or without lubrication		
Regulation range	1 ÷ 10 bar (±0,5 - 20°)		
Maximum overpressure limit	80 bar		
Maximum fluid pressure	40 bar		
Port	1/8" Gas taper (BSPT)		1/4" Gas BSPT (BSPT)
Function	Normally open	Normally closed	Normally closed
Maximum switch voltage	250 V		
Maximum switch current	0,5 A		
Acting type	1B		
Pollution situation	Normal		
Protection class	IP 00 (without cap) - IP 54 (with cap)		
Temperature range	-15°C ÷ +100°C		
Mechanical working life	10^6 cycles		
Electrical working life	10^5 cycles		
Compliance	EN60730-i		

Standard materials

Type	PR
Body	Brass
Silver-plated electric contacts	Silver AgNi
Diaphragm	NBR
Contact holder	Rubber

Accessories with integrated function
Stop valves

Main features

Type	Description	Symbol
V45..U	Uni-directional stop valve. In nickel-plated brass.	
V45..B	Bi-directional stop valve. In nickel-plated brass.	



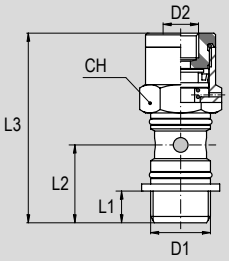

Dimensions

Code	Item	Symbol	D1	D2	L1	L2	L3	CH	Weight (g)
030133	V450018U	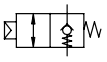	G1/8"	M5x0,8	6,2	15,5	42,8	13	24
030123	V450014U		G1/4"	M5x0,8	8,2	18,3	47,5	17	46
030124	V450038U		G3/8"	G1/8"	9,2	21	55	20	77,5
030134	V450012U		G1/2"	G1/8"	10,5	25	61,5	25	138,5
030135	V450018B	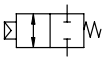	G1/8"	M5x0,8	6,2	15,5	42,8	13	24
030136	V450014B		G1/4"	M5x0,8	8,2	18,3	47,5	17	46
030137	V450038B		G3/8"	G1/8"	9,2	21	55	20	77,5
030138	V450012B		G1/2"	G1/8"	10,5	25	61,5	25	138,5

Technical data

Type		V45			
Size		1/8"	1/4"	3/8"	1/2"
Fluid		Filtered compressed air with or without lubrication			
Pressure range		0 ÷ 10 bar			
Piloting pressure range		See page 4.127.11			
Temperature range		-20°C ÷ +80°C			
Parallel threads		UNI - ISO 228 / 1 (BSP)			
Function		See page 4.127.11			
Matching with banjo fittings		See page 4.127.12			
Flow at 6 bar with ΔP 1 bar	Uni-directional	170 Nl/min	345 Nl/min	700 Nl/min	1.050 Nl/min
	Bi-directional	440 Nl/min	660 Nl/min	965 Nl/min	1.450 Nl/min

Standard materials

Type	V45
Body	Nickel-plated brass
Piston	Stainless Steel AISI 304
Spring	Stainless Steel AISI 302
Washer	PA6
Seals	NBR - Polyurethane (PU)

Function (with K option)

Type V45..U
(Uni-directional)



Type V45..B
(Bi-directional)



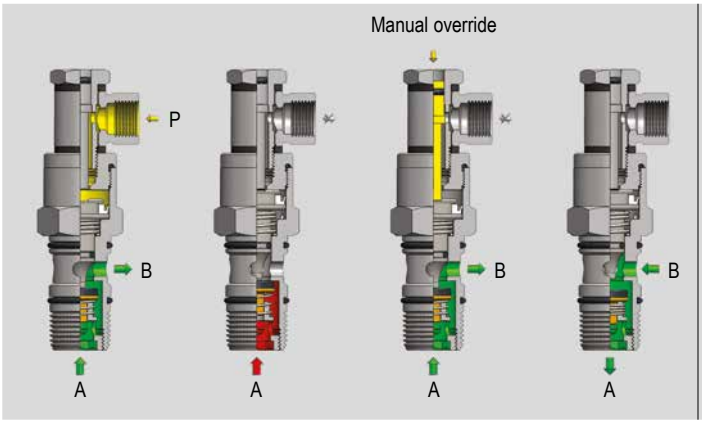

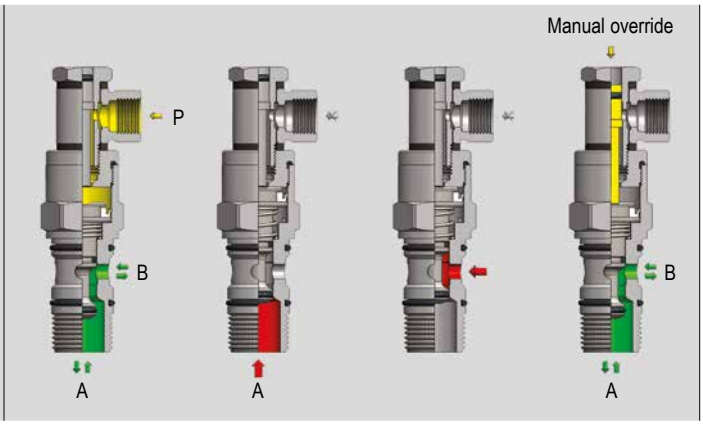

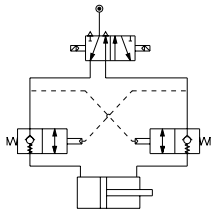

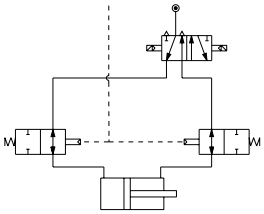

Series of stop valves available in uni-directional and bi-directional versions. When mounted in pairs on a cylinder, they block the movement in the event of a sudden drop in piloting pressure.
By means of the manual release device (with option K, available on request) it is possible to manually reset the piston stroke.

Piloting pressure in function of feeding pressure

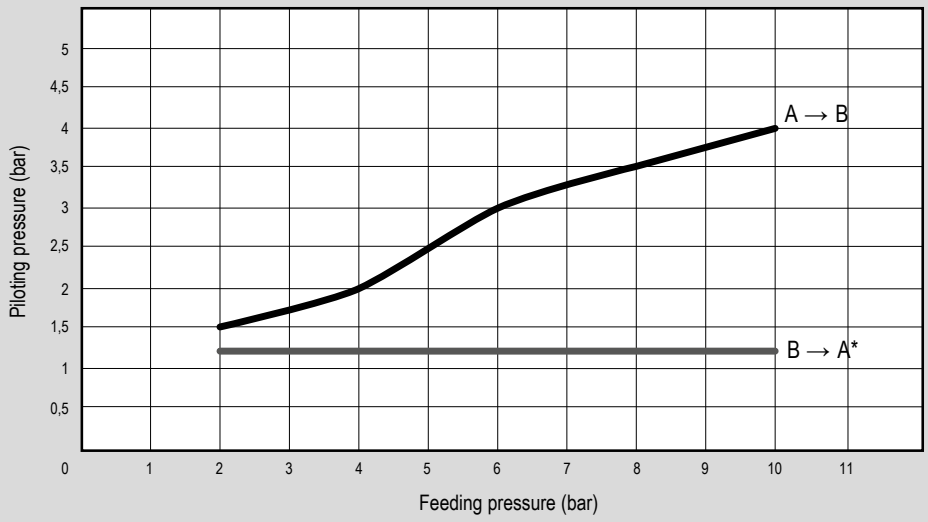

*Only for bi-directional versions (type V45..B)

Accessories with integrated function
Stop valves

Matching with banjo series R



Code	Item	For thread	Tube ext.Ø
020733	R 35 04 18	1/8”	4
020736	R 35 06 18	1/8”	6
020737	R 35 06 14	1/4”	6
020738	R 35 08 18	1/8”	8
020739	R 35 08 14	1/4”	8
020740	R 35 08 38	3/8”	8
020741	R 35 10 14	1/4”	10
020742	R 35 10 38	3/8”	10
020743	R 35 12 38	3/8”	12
020744	R 35 12 12	1/2”	12

Matching with banjo series RT



Code	Item	For thread	Tube ext.Ø
029392	RT 28 04 18	1/8"	4
029393	RT 28 06 18	1/8"	6
029394	RT 28 06 14	1/4"	6
029395	RT 28 08 18	1/8"	8
029396	RT 28 08 14	1/4"	8
029397	RT 28 08 38	3/8"	8
029398	RT 28 10 14	1/4"	10
029399	RT 28 10 38	3/8"	10

Matching with banjo series C



Code	Item	For thread	Tube ext.Ø
021318	C 23 04 18	1/8"	4
021303	C 23 05 18	1/8"	5
021306	C 23 06 18	1/8"	6
021307	C 23 06 14	1/4"	6
021308	C 23 08 18	1/8"	8
021309	C 23 08 14	1/4"	8
021310	C 23 08 38	3/8"	8
021311	C 23 10 14	1/4"	10
021312	C 23 10 38	3/8"	10

Matching with banjo series O



Code	Item	For thread	Tube ext.Ø
022056	O 25 06 18	1/8”	6
022057	O 25 06 14	1/4”	6
022058	O 25 08 18	1/8”	8
022059	O 25 08 14	1/4”	8

Matching with banjo series A



Code	Item	For thread	Thread
022871	A042 18 18	1/8”	1/8”
022872	A042 14 14	1/4”	1/4”
022873	A042 38 38	3/8”	3/8”
022874	A042 12 12	1/2”	1/2”

Matching with stud push-in fittings type R12



Code	Item	Valve size
020031	R 12 04 M5	1/8”-1/4"
020051	R 12 06 M5	1/8”-1/4"
020037	R 12 06 18	3/8”-1/2"
020039	R 12 08 18	3/8”-1/2"

Matching with elbow push-in fittings type R41



Code	Item	Valve size
020191	R 41 04 M5	1/8”-1/4"
020211	R 41 06 M5	1/8”-1/4"
020196	R 41 06 18	3/8”-1/2"
020198	R 41 08 18	3/8”-1/2"

Main features

Type	Description	Symbol
V44	Push-in elbow throttle fitting. In nickel-plated brass.	



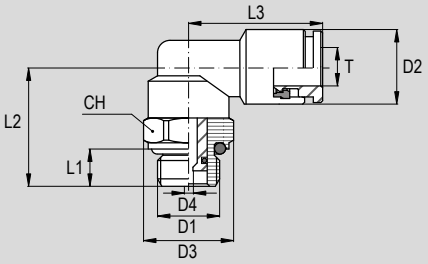

Dimensions

Code	Item	Symbol	T (Øe tube)	D1	D2	D3	D4	L1	L2	L3	CH	Weight (g)
-	V44 04 M5 ..*		4	M5x0,8	9,1	10	*	4	12,5	18,5	6	11,4
-	V44 04 18 ..*		4	G1/8"	9,1	14,5	*	5	18,2	19,5	13	18
-	V44 06 M5 ..*		6	M5x0,8	12	10	*	4	12,5	21,5	6	13
-	V44 06 18 ..*		6	G1/8"	12	14,5	*	5	18,2	22	13	20
-	V44 06 14 ..*		6	G1/4"	12	16	*	6,5	22,7	22	13	24
-	V44 08 18 ..*		8	G1/8"	14	14,5	*	5	18	22,5	13	22
-	V44 08 14 ..*		8	G1/4"	14	16	*	6,5	22,5	22,5	13	26

*Note: is required to indicate the calibred hole diameter desired. For choosing the quote D4, please refer to the table below.

Technical data

Type	V44
Fluid	Filtered compressed air with lubrication
Pressure range	0 ÷ 15 bar
Temperature range	-20°C ÷ +80°C
Parallel threads	UNI - ISO 228 / 1 (BSP)

Standard materials

Type	V44
Body	Nickel-plated brass
Fitting	Series R (see page 4.3.1)
Seals	NBR

Function

These fittings have an internal bush, with a calibrated hole whose diameter results in a flow restriction. Typical uses of these components are applications where the desired flow or cylinders speed is known in advance and following adjustments are not required. The advantages of using throttle fittings is the impossibility of making unwanted adjustments to the flow and the constancy over time of the adjustment, which is essential in the presence of vibrations.

Flow diagram

P = 6 bar, with ΔP 1 bar

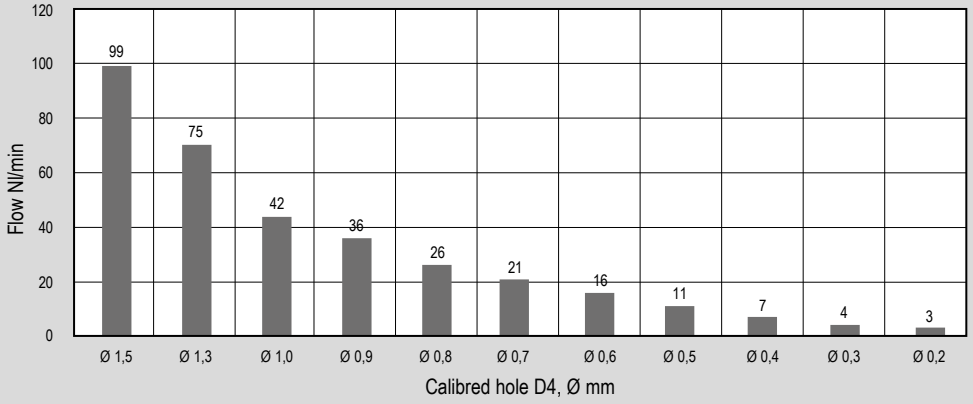

Accessories with integrated function
Slow starters

Main features

Type	Description	Symbol
V61	Slow starters. In nickel-plated brass.	



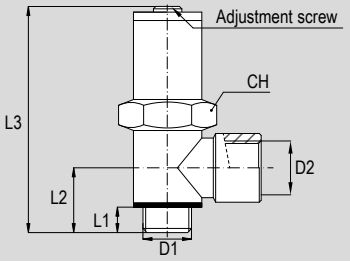

Dimensions

Code	Item	Symbol	D1	D2	L1	L2	L3	CH	Weight (g)
024475	V61 00 14	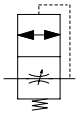	G1/4"	G1/4"	6,7	17	63,9	20	99
024476	V61 00 38		G3/8"	G3/8"	9,2	21	69,4	20	130
024477	V61 00 12		G1/2"	G1/2"	10,5	24,5	72,4	25	180

Technical data

Type	V61		
Size	1/4"	3/8"	1/2"
Fluid	Compressed air		
Pressure range (P1)	3 ÷ 10 bar		
Full open	2/3 of P1		
Temperature range	-20°C ÷ +80°C		
Parallel threads	UNI - ISO 228 / 1 (BSP)		
Flow at 6 bar with ΔP 1 bar	1.040 Nl/min	1.900 Nl/min	2.570 Nl/min

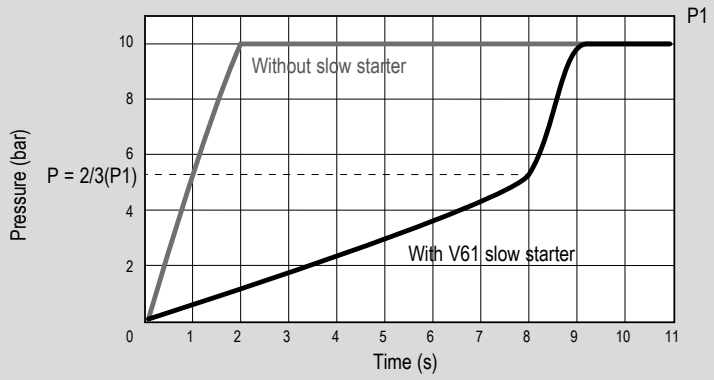

The slow starter allows the system to be gradually pressurised, protecting any actuators in the line from the so-called "water hammer" caused by immediate pressurisation of the previously unloaded system. Slowly opening, as the user setting through the adjustment screw, this component progressively introduces pressure into the circuit up to the desired pressure P1, within the indicated operating range (3 ÷ 10 bar), allowing the actuators to reach the operating position gradually and without suffering any sudden shocks. The filling speed of the circuit is determined by the rotation of the adjustment needle: turning clockwise will result in increasingly slower filling.

Standard materials

Type	V61
Body	Nickel-plated brass
Spring	Stainless Steel AISI 302
Ring	Nickel-plated brass
Seals	NBR - Polyurethane (PU)
Washer	Nylon (PA6)

Main features

Type	Description	Symbol
V62	Threshold sensor. In nickel-plated brass.	-



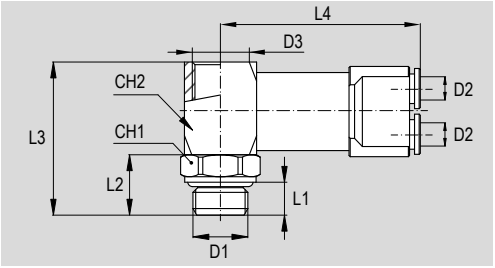

Dimensions

Code	Item	Symbol	D1	D2	D3	L1	L2	L3	L4	CH1	CH2	Weight (g)
024008	V62 00 18	-	G1/8"	4	G1/8"	5	11	27	39	14	16	69
024010	V62 00 14		G1/4"	4	G1/4"	6,5	13	33	41	16	16	78,3
024011	V62 00 38		G3/8"	4	G3/8"	7	14,5	34,5	43,3	20	20	98

Technical data

Type	V62
Fluid	Compressed air
Pressure range	0 ÷ 10 bar
Temperature range	-20°C ÷ +80°C
Parallel threads	UNI - ISO 228 / 1 (BSP)
Function	See page 4.130.11
Commutation pressure range	See table below

Standard materials

Type	V62
Body	Nickel-plated brass
Fitting	Series R (see page 4.3.1)
Seals	NBR

Pressure range / Commutation pressure range

Type V62

Pressure range	3 bar	4 bar	5 bar	6 bar	7 bar	8 bar	9 bar	10 bar
Commutation pressure range	0,3 bar	0,5 bar	0,65 bar	0,9 bar	1,0 bar	1,2 bar	1,4 bar	1,6 bar

Function

Type V62

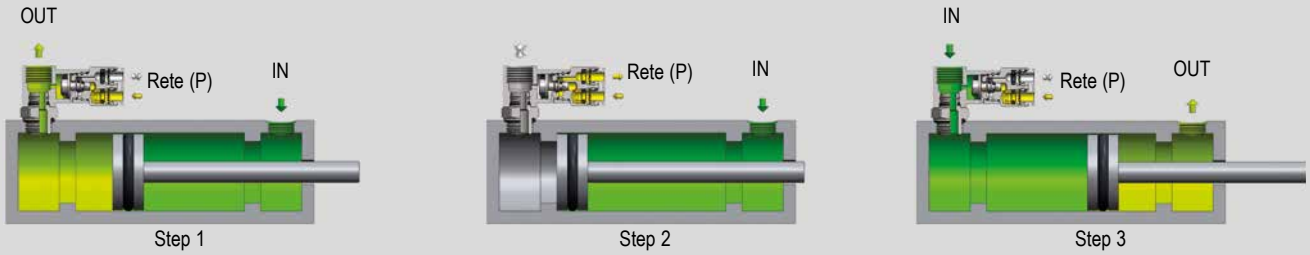

Pneumatic limit switches can detect a pressure drop, and in this case send a signal (S).
Paricularly interesting is the application as a 'limit switch sensor' mounted directly to the cylinder. When the cylinder complete the stroke, i.e. when the exhaust backpressure in the chamber was discharged, a control signal (S) is sent to the directional valve, which, when switched, will send the input to the cylinder to reverse the stroke. The main advantage is that the cylinder stroke can be controlled without need for electrical wiring. The only condition imposed for correct operation of the pneumatic sensor is that the cylinder must make the full stroke, no intermediate positions are permitted.

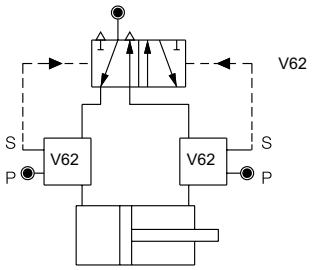

Notes

SILENCERS



Find out our
key products

- **Solution for most applications**
- **Easy and intuitive choice**
- **Excellent value for money**
- **Wide availability**
- **Fast delivery**

Main features and certifications

Silencers available in different type, materials, functions and threads. To apply at the exhaust to reduce noise.
Supplied as standard in compliance to Reach and RoHS directives.

Silencers in plastic polymer

from page 4.151.10



Series of plastic polymer silencers. Available in different versions. Sizes from M5 to 1".

Sintered silencers

from page 4.153.10



Series of sintered silencers. Available in different shapes and types. Sizes from M5 to 1".

Metal silencers

from page 4.155.10



Series of metal silencers. Available in two versions: with aluminium body and noise absorbing cartridge (M, MR and MD types) and in zinc-plated steel with stainless steel cartridge (type MI). Sizes from 1/8" to 6".

Silencers
In plastic polymer



Code key

Type	Size [1]	Color [1]	Thread option [2]
SPD	**18**	**BL**	**NPT**

Type
SPD
SPF
SPS
AS19
AS22

Size [1]
M5 = M5x0,8
18 = 1/8"
14 = 1/4"
38 = 3/8"
12 = 1/2"
34 = 3/4"
1 = 1"

Size [1]
04 = Ø 4 mm
06 = Ø 6 mm
08 = Ø 8 mm
10 = Ø 10 mm
12 = Ø 12 mm

Color [1]
BL = Blue
NE = Black
GI = Yellow
NT = White

Thread option [2]
NPT = NPT thread (according to ANSI B 1.20.1)

Notes

For standard materials see single product data sheets.

(1) For matching between type, thread or stem and color, see from page 4.151.11; for specific type, see the following pages.

(2) Available only for series SPF (sizes from 1/8" to 1/2") and series AS19 (sizes from 1/8" to 1").

How to order type SPD and SPF

Type	Size	Color	Option
SPD	**18**	**BL**	**NPT**

How to order type AS19 and SPS

Type	Size	Option
AS19	**18**	**NPT**

How to order type AS22

Type	Size
AS22	**08**

Silencers in plastic polymer

Type		Parallel threads (BSP)	Metric threads	Stem Ø mm	Color			Data sheet and code page
SPD	Acetalic resin silencer, dynamic (self-cleaning) with BSP threads	1/8", 1/4", 3/8", 1/2", 3/4", 1"	-	-	 BL	 NE	 GL	4.151.12
SPF	Acetalic resin silencer, static (felt) with BSP threads	1/8", 1/4", 3/8", 1/2"	-	-	 BL	 NE	 NT	4.151.14
		3/4", 1"	-	-	 BL	 NE	 GL	4.151.16
SPS	Polyacetal and polyethylene silencer, static, high flow rate, with BSP threads	1/8", 1/4", 3/8", 1/2", 3/4", 1"	-	-	 NE			4.151.18
AS19	Polyethylene silencer, with BSP threads	1/8", 1/4", 3/8", 1/2", 3/4", 1"	M5x0,8	-				4.151.20
AS22	Polyethylene silencers, with stem	-	-	4, 6, 8, 10, 12				4.151.22

Silencers
In plastic polymer, series SPD

Main features

Type	Description	Symbol
SPD	Acetalic resin silencer, dynamic and self-cleaning. The sound absorbing material, composed by moving elements, avoid the risk of obstructions maintaining costant in time the air flow.	



Technical data

Type	SPD					
Size	1/8"	1/4"	3/8"	1/2"	3/4"	1"
Fluid	Compressed air					
Pressure range	0 ÷ 6 bar					
Temperature range	-10°C ÷ +70°C					
Parallel threads	UNI - ISO 228 / 1 (BSP)					
Mounting	Any position					
Filtering element porosity	-					
Flow at 6 bar with ΔP 1 bar	700 Nl/min.	1.100 Nl/min.	2.900 Nl/min.	2.900 Nl/min.	5.000 Nl/min.	5.000 Nl/min.
Noise at 6 bar from 1 mt.	< 90 dB					

Standard materials

Type	SPD
Body	Acetalic resin (POM)
Noise-absorbing material	Acetal resin (POM) granulate

Standard dimensions

Type: **SPD**
1/8" ÷ 1"

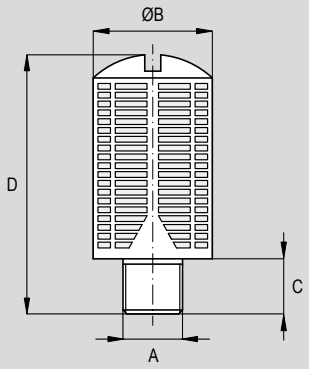

Code	Item	Symbol	Color	A	ØB	C	D	Weight (g)
016001	SPD18BL		Blue	G1/8"	15,5	6	32,5	3
016002	SPD14BL		Blue	G1/4"	19,5	8	43	6,5
016003	SPD38BL		Blue	G3/8"	24,5	11	58	14
016004	SPD12BL		Blue	G1/2"	24,5	11	58	15,5
016005	SPD34BL		Blue	G3/4"	48	18	115	107,5
016006	SPD01BL		Blue	G1"	48	18	115	110,5
016011	SPD18NE		Black	G1/8"	15,5	6	32,5	3
016012	SPD14NE		Black	G1/4"	19,5	8	43	6,5
016013	SPD38NE		Black	G3/8"	24,5	11	58	14
016014	SPD12NE		Black	G1/2"	24,5	11	58	15,5
016015	SPD34NE		Black	G3/4"	48	18	115	107,5
016016	SPD01NE		Black	G1"	48	18	115	110,5
010001	SPD18GI		Yellow	G1/8"	15,5	6	32,5	3
010002	SPD14GI		Yellow	G1/4"	19,5	8	43	6,5
010003	SPD38GI		Yellow	G3/8"	24,5	11	58	14
010004	SPD12GI		Yellow	G1/2"	24,5	11	58	15,5
010005	SPD34GI		Yellow	G3/4"	48	18	115	107,5
010006	SPD01GI		Yellow	G1"	48	18	115	110,5

Silencers
In plastic polymer, series SPF

Main features

Type	Description	Symbol
SPF	Acetalic resin silencer, with noise-absorbing element in felt and metal net.	



Technical data

Type	SPF			
Size	1/8”	1/4”	3/8”	1/2”
Fluid	Compressed air			
Pressure range	0 ÷ 6 bar			
Temperature range	-10°C ÷ +70°C			
Parallel threads	UNI - ISO 228 / 1 (BSP)			
Mounting	Any position			
Filtering element porosity	-			
Flow at 6 bar with ΔP 1 bar	650 Nl/min.	1.050 Nl/min.	2.760 Nl/min.	2.760 Nl/min.
Noise at 6 bar from 1 mt.	< 90 dB			

Standard materials

Type	SPF
Body	Acetalic resin (POM)
Noise-absorbing material	Pressed felt and aluminium net

Standard dimensions

Type: **SPF**
1/8" ÷ 1/2"

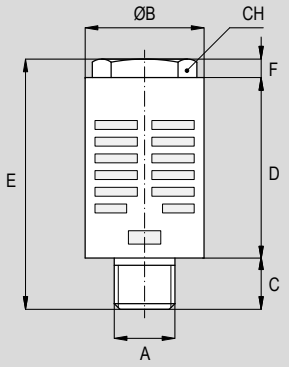

Code	Item	Symbol	Color	A	ØB	C	CH	D	E	F	Weight (g)
017031	SPF18BL		Blue	G1/8"	15,5	6	10	25,5	33	2,5	4
017032	SPF14BL		Blue	G1/4"	19,5	8	12	32	43	3	6
017033	SPF38BL		Blue	G3/8"	24,5	11	16	44	58	3	11,5
017034	SPF12BL		Blue	G1/2"	24,5	11	16	44	58	3	13,5
010021	SPF18NE		Black	G1/8"	15,5	6	10	25,5	33	2,5	4
010022	SPF14NE		Black	G1/4"	19,5	8	12	32	43	3	6
010023	SPF38NE		Black	G3/8"	24,5	11	16	44	58	3	11,5
010024	SPF12NE		Black	G1/2"	24,5	11	16	44	58	3	13,5
017021	SPF18NT		White	G1/8"	15,5	6	10	25,5	33	2,5	4
017022	SPF14NT		White	G1/4"	19,5	8	12	32	43	3	6
017023	SPF38NT		White	G3/8"	24,5	11	16	44	58	3	11,5
017024	SPF12NT		White	G1/2"	24,5	11	16	44	58	3	13,5

Dimensions with NPT option

Type: **SPF..NPT**
1/8" ÷ 1/2"

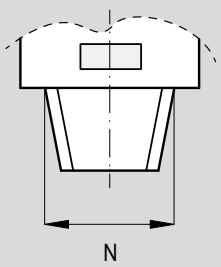

Code	Item	Symbol	N
*	SPF18..NPT		1/8" - 27 NPT
*	SPF14..NPT		1/4" - 18 NPT
*	SPF38..NPT		3/8" - 18 NPT
*	SPF12..NPT		1/2" - 14 NPT

* For code please contact the sales department

Silencers
In plastic polymer, series SPF

Main features

Type	Description	Symbol
SPF	Acetalic resin silencer, with noise-absorbing element in felt and metal net.	



Technical data

Type	SPF	
Size	3/4”	1”
Fluid	Compressed air	
Pressure range	0 ÷ 6 bar	
Temperature range	-10°C ÷ +70°C	
Parallel threads	UNI - ISO 228 / 1 (BSP)	
Mounting	Any position	
Filtering element porosity	-	
Flow at 6 bar with ΔP 1 bar	-	-
Noise at 6 bar from 1 mt.	< 90 dB	

Standard materials

Type	SPF
Body	Acetalic resin (POM)
Noise-absorbing material	Pressed felt and aluminium net

Standard dimensions

Type: **SPF**
3/4" ÷ 1"

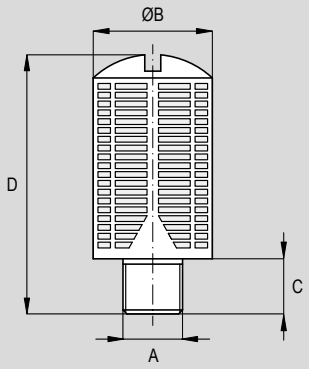

Code	Item	Symbol	Color	A	ØB	C	D	Weight (g)
017035	SPF34BL		Blue	G3/4"	48	18	115	69,5
017036	SPF01BL		Blue	G1"	48	18	115	72,5
010025	SPF34NE		Black	G3/4"	48	18	115	69,5
010026	SPF01NE		Black	G1"	48	18	115	72,5
017045	SPF34GI		Yellow	G3/4"	48	18	115	69,5
017046	SPF01GI		Yellow	G1"	48	18	115	72,5

Silencers

In plastic polymer, series SPS



Main features

Type	Description	Symbol
SPS	Polyacetal silencer, static and high flow. The dimensions and the micro-porous polyethylene noise-absorbing grant high flow rates and low noise values.	

Technical data

Type	SPS					
Size	1/8"	1/4"	3/8"	1/2"	3/4"	1"
Fluid	Compressed air					
Pressure range	0 ÷ 10 bar					
Temperature range	-10°C ÷ +70°C					
Parallel threads	UNI - ISO 228 / 1 (BSP)					
Mounting	Any position					
Filtering element porosity	-					
Flow at 6 bar with ΔP 1 bar	2.050 Nl/min.	3.400 Nl/min.	5.900 Nl/min.	10.600 Nl/min.	15.000 Nl/min.	19.900 Nl/min.
Noise at 6 bar from 1 mt.	< 77 dB	< 77 dB	< 82 dB	< 80 dB	< 83 dB	< 84 dB

Standard materials

Type	SPS
Body	Polyacetal
Noise-absorbing material	Polyethylene

Standard dimensions

Type: **SPS**
1/8" ÷ 1"

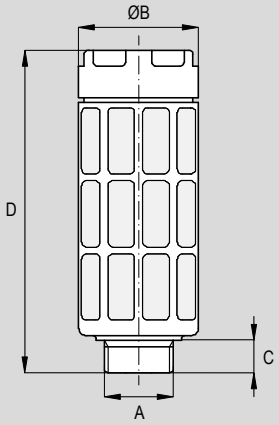

Code	Item	Symbol	Color	A	ØB	C	D	Weight (g)
016171	SPS18NE		Black	G1/8"	15,2	5,2	35,5	2
016172	SPS14NE		Black	G1/4"	19,2	6,5	56,4	8
016173	SPS38NE		Black	G3/8"	33,2	7	77,5	30
016174	SPS12NE		Black	G1/2"	43	9	88	58
016175	SPS34NE		Black	G3/4"	44,5	10,5	119,5	83
016176	SPS01NE		Black	G1"	55	11,5	124,5	140

Silencers
In plastic polymer, series AS19

Main features

Type	Description	Symbol
AS19	Compact polyethylene silencer, with threaded connections.	



Technical data

Type	AS19						
Size	M5	1/8”	1/4”	3/8”	1/2”	3/4”	1”
Fluid	Compressed air						
Pressure range	0 ÷ 10 bar						
Temperature range	-20°C ÷ +80°C						
Parallel threads	UNI - ISO 228 / 1 (BSP)						
Metric threads	UNI EN ISO 965-1						
Mounting	Any position						
Filtering element porosity	50 µm						
Flow at 6 bar with ΔP 1 bar	381 Nl/min.	1.560 Nl/min.	3.447 Nl/min.	5.682 Nl/min.	7.142 Nl/min.	8.356 Nl/min.	13.329 Nl/min.
Noise	-	78 dB	80 dB	85 dB	88 dB	-	-
Flow tolerance	±10%						

Standard materials

Type	AS19
Body	Polyethylene
Noise-absorbing material	Porous polyethylene

Standard dimensions

Type: **AS19**
M5 ÷ 1"

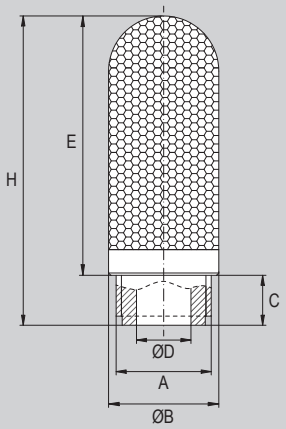

Code	Item	Symbol	Color	A	ØB	C	ØD	E	H	Weight (g)
016108	AS19M5		-	M5x0,8	7	4	3	18	22	-
016103	AS1918		-	G1/8"	13	7	5	28	35	-
016102	AS1914		-	G1/4"	17	9	8	34	43	-
016104	AS1938		-	G3/8"	20	11	10	56	67	-
016105	AS1912		-	G1/2"	25	11	12	67	78	-
016106	AS1934		-	G3/4"	38	16	16	116	131	-
016107	AS1901		-	G1"	48	20	22	140	160	-

Dimensions with NPT option

Type: **AS19..NPT**
1/8" ÷ 1"

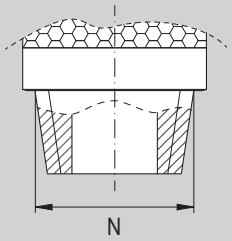

Code	Item	Symbol	N
*	AS1918NPT		1/8" NPT
*	AS1914NPT		1/4" NPT
*	AS1938NPT		3/8" NPT
*	AS1912NPT		1/2" NPT
*	AS1934NPT		3/4" NPT
*	AS1901NPT		1" NPT

* For code please contact the sales department

Silencers

In plastic polymer, series AS22

Main features

Type	Description	Symbol
AS22	Compact polyethylene silencer, with stem.	



Technical data

Type	AS22				
Size	Ø 4	Ø 6	Ø 8	Ø 10	Ø 12
Fluid	Compressed air				
Pressure range	0 ÷ 10 bar				
Temperature range	-20°C ÷ +80°C				
Stem	For push-in fittings				
Mounting	Any position				
Filtering element porosity	50 µm				
Flow* at 6 bar with ΔP 1 bar	380 Nl/min.	660 Nl/min.	1.310 Nl/min.	2.800 Nl/min.	4.100 Nl/min.
Flow tolerance	±10%				

*For further details refer to the table below

Standard materials

Type	AS22
Body	Polyethylene
Noise-absorbing material	Porous polyethylene

Flow diagram

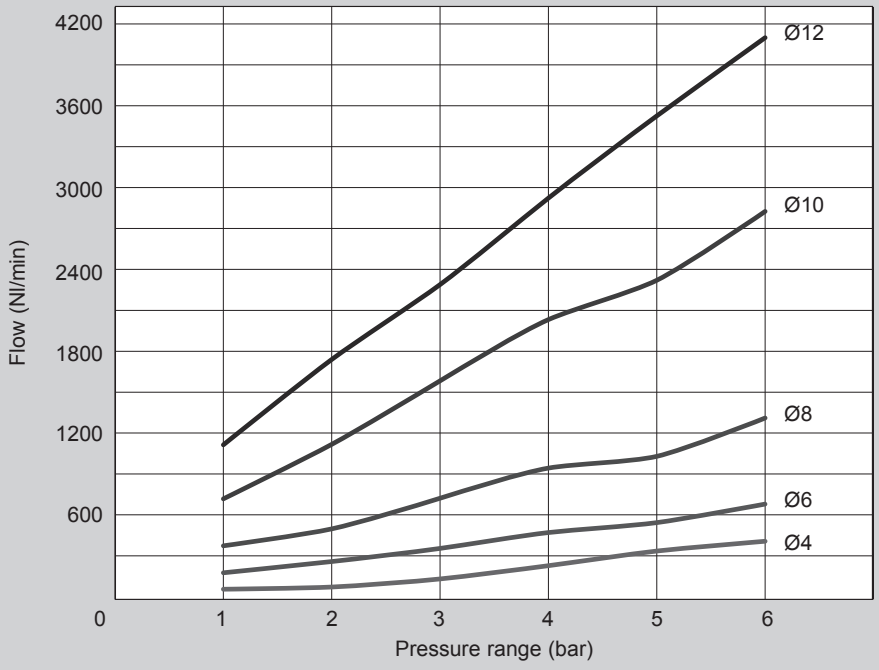

Standard dimensions

Type: **AS22**
Ø 4 ÷ 12

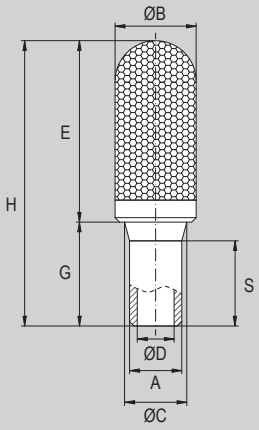

Code	Item	Symbol	Color	A	ØB	ØC	ØD	E	G	H	S	Weight (g)
016151	AS2204		-	4	7	5	3	16	16	32	15	-
016152	AS2206		-	6	13	8	4	25	21	46	17	-
016153	AS2208		-	8	14	10	5	22	22	44	18	-
016154	AS2210		-	10	16	13	7	31	27	58	23	-
016155	AS2212		-	12	19	15	9	54	29	83	25	-

Silencers
Sintered



Code key

Type	Size [1]	Option
ACQ	**18**	**N**

Type
AC
ACQ
AE
AEA
AEB
ACT
AEP
AFE
AP
AT
ATT
ACI [2]

Size
M5 = M5x0,8
18 = 1/8"
18F = 1/8" female
14 = 1/4"
38 = 3/8"
12 = 1/2"
34 = 3/4"
01 = 1"
21 = 1 1/2"
20 = 2"

Size
04 = Ø 4 mm
06 = Ø 6 mm
08 = Ø 8 mm

Option
N = Fully nickel-plated

Notes

For standard materials see single product data sheets.

(1) For matching between type and thread (or stem), see from page 4.153.11; for the specific type, see the following pages.

(2) Available with stem only.

How to order

Type	Size
AE	**18**

How to order type ACI

Type	Size
ACI	**08**

How to order with N option

Type	Size	Option
ACQ	**18**	**N**

Sintered silencers

Type			Parallel threads (BSP)	Metric threads	Stem Ø mm	Data sheet and code page
AC	Silencer with truncated cone filtering element in sintered spherical bronze and nipple in brass.		1/8", 1/4", 3/8", 1/2", 3/4", 1"	M5x0,8	-	4.153.12
ACQ	Silencer with truncated cone with hexagonal wrench on top filtering element in sintered spherical bronze and nipple in brass.		1/8", 1/4", 3/8", 1/2", 3/4", 1"	M5x0,8	-	4.153.13
AE	Silencer with truncated cone filtering element in sintered spherical bronze and nipple in brass with hexagonal wrench.		1/8", 1/8"F, 1/4", 3/8", 1/2", 3/4", 1"	M5x0,8	-	4.153.14
AEA	Silencer with extended truncated cone filtering element in sintered spherical bronze and nipple in brass with hexagonal wrench.		1/8", 1/8"F, 1/4", 3/8", 1/2", 3/4", 1", 1 1/2", 2"	M5x0,8	-	4.153.15
AEB	Silencer with truncated cone filtering element in sintered spherical bronze and nipple in copper-plated steel with hexagonal wrench.		1/8", 1/4", 3/8", 1/2", 3/4", 1"	M5x0,8	-	4.153.16
ACT	Silencer with truncated cone with slot cut on top, fully made of sintered spherical bronze.		1/8", 1/4", 3/8", 1/2", 3/4", 1"	-	-	4.153.17
ACI	Silencer with truncated cone filtering element in sintered spherical bronze and stem in brass.		-	-	4, 6, 8	4.153.18
AEP	Silencer with flat filtering element in sintered spherical bronze and nipple in brass with hexagonal wrench.		1/8", 1/8"F, 1/4", 3/8", 1/2", 3/4", 1"	M5x0,8	-	4.153.19
AFE	Silencer with stainless steel mesh filtering element and nipple in brass with hexagonal wrench.		1/8", 1/8"F, 1/4", 3/8", 1/2", 3/4", 1"	M5x0,8	-	4.153.20
AP	Insert silencer with flat filtering element in sintered spherical bronze and nipple in brass.		1/8", 1/4", 3/8", 1/2", 3/4", 1"	-	-	4.153.21
AT	Silencer with cylindrical filtering element in sintered spherical bronze and nipple in brass.		1/8", 1/4"	-	-	4.153.22
ATT	Silencer with cylindrical filtering element with slot cut on top in sintered spherical bronze and nipple in brass.		1/8", 1/4", 3/8", 1/2", 3/4", 1"	-	-	4.153.23

Silencers
Sintered, series AC

Main features

Type	Description	Symbol
AC	Silencer with truncated cone filtering element in sintered spherical bronze and nipple in brass.	



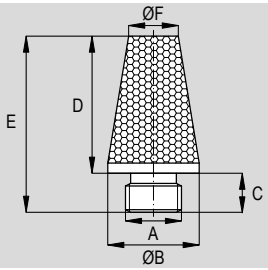

Dimensions

Code	Item	Symbol	A	Ø B	Ø F	C	D	E	Weight (g)
010037	ACM5		M5x0,8	6	5	4,5	10	14,5	-
010031	AC18		G1/8”	12	8	6	16	22	-
010032	AC14		G1/4”	15	11	6	20	26	-
010033	AC38		G3/8”	19	15	8	30,5	38,5	-
010034	AC12		G1/2”	23	18	9	32	41	-
010035	AC34		G3/4”	31	28	10	33	43	-
010036	AC01		G1”	37	32	12	41	53	-

Technical data

Type	AC
Fluid	Compressed air
Pressure range	0 ÷ 10 bar
Temperature range	-10°C ÷ +80°C
Parallel threads	UNI - ISO 228 / 1 (BSP)
Metric threads	UNI EN ISO 965-1
Filtering element porosity	36 µm

Standard materials

Type	AC
Nipple	Brass
Filtering element	Sintered spherical bronze

Silencers
Sintered, series ACQ

Main features

Type	Description	Symbol
ACQ	Silencer with truncated cone with hexagonal wrench on top filtering element in sintered spherical bronze and nipple in brass.	



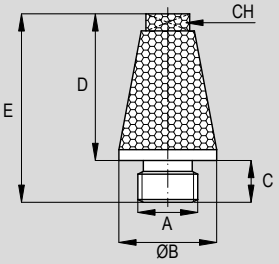

Dimensions

Code	Item	Symbol	A	Ø B	CH	C	D	E	Weight (g)
010057	ACQM5		M5x0,8	12	7	6	16	20	-
010051	ACQ18		G1/8”	12	7	6	16	22	-
010052	ACQ14		G1/4”	15	9	6	20	26	-
010053	ACQ38		G3/8”	19	10	8	30	38	-
010054	ACQ12		G1/2”	23	14	9	32	41	-
010055	ACQ34		G3/4”	31	20	10	41	51	-
010056	ACQ01		G1”	37	23	12	48	60	-

Technical data

Type	ACQ
Fluid	Compressed air
Pressure range	0 ÷ 10 bar
Temperature range	-10°C ÷ +80°C
Parallel threads	UNI - ISO 228 / 1 (BSP)
Metric threads	UNI EN ISO 965-1
Filtering element porosity	36 µm

Standard materials

Type	ACQ
Nipple	Brass
Filtering element	Sintered spherical bronze

Silencers
Sintered, series AE

Main features

Type	Description	Symbol
AE	Silencer with truncated cone filtering element in sintered spherical bronze and nipple in brass with hexagonal wrench.	



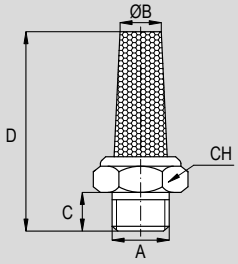

Dimensions

Code	Item	Symbol	A	Ø B	CH	C	D	Weight (g)
010127	AEM5		M5x0,8	4	8	4	16	-
010121	AE18		G1/8”	7,5	13	6	28	-
010128	AE18F		G1/8”F	7,5	13	6	28	-
010122	AE14		G1/4”	9	16	8	32	-
010123	AE38		G3/8”	12	19	7,5	41	-
010124	AE12		G1/2”	16	24	10	46,5	-
010125	AE34		G3/4”	20,5	30	10	49	-
010126	AE01		G1”	21	36	10	58	-

Technical data

Type	AE
Fluid	Compressed air
Pressure range	0 ÷ 10 bar
Temperature range	-10°C ÷ +80°C
Parallel threads	UNI - ISO 228 / 1 (BSP)
Metric threads	UNI EN ISO 965-1
Filtering element porosity	36 µm

Standard materials

Type	AE
Nipple	Brass
Filtering element	Sintered spherical bronze

Silencers
Sintered, series AEA

Main features

Type	Description	Symbol
AEA	Silencer with extended truncated cone filtering element in sintered spherical bronze and nipple in brass with hexagonal wrench.	



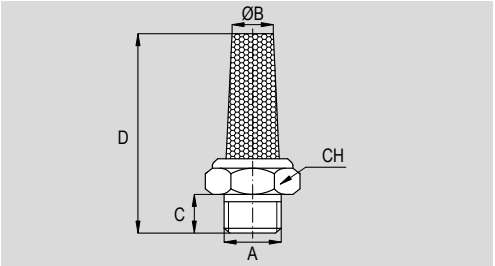

Dimensions

Code	Item	Symbol	A	Ø B	CH	C	D	Weight (g)
010167	AEAM5		M5x0,8	4	8	4	24	-
010161	AEA18		G1/8”	7	13	6	41,5	-
010168	AEA18F		G1/8”F	7	13	6	41,5	-
010162	AEA14		G1/4”	8	16	8	52	-
010163	AEA38		G3/8”	10	19	7,5	55	-
010164	AEA12		G1/2”	14	24	10	67	-
010165	AEA34		G3/4”	15	30	10	67	-
010166	AEA01		G1”	20	36	10,5	78	-
010169	AEA21		G1 1/2”	28	55	20	140	-
010170	AEA20		G2”	36	65	17	215	-

Technical data

Type	AEA
Fluid	Compressed air
Pressure range	0 ÷ 10 bar
Temperature range	-10°C ÷ +80°C
Parallel threads	UNI - ISO 228 / 1 (BSP)
Metric threads	UNI EN ISO 965-1
Filtering element porosity	36 µm

Standard materials

Type	AEA
Nipple	Brass
Filtering element	Sintered spherical bronze

Silencers
Sintered, series AEB

Main features

Type	Description	Symbol
AEB	Silencer with truncated cone filtering element in sintered spherical bronze and nipple in copper-plated steel with hexagonal wrench.	



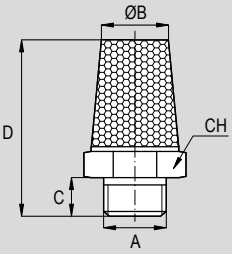

Dimensions

Code	Item	Symbol	A	Ø B	CH	C	D	Weight (g)
010147	AEBM5		M5x0,8	5	7	3,5	18	-
010141	AEB18		G1/8”	8,5	12	4,5	21	-
010142	AEB14		G1/4”	11	15	6	27,5	-
010143	AEB38		G3/8”	14	19	7	35	-
010144	AEB12		G1/2”	17	23	8	42,5	-
010145	AEB34		G3/4”	21	30	9	54	-
010146	AEB01		G1”	26,5	36	11	67	-

Technical data

Type	AEB
Fluid	Compressed air
Pressure range	0 ÷ 10 bar
Temperature range	-10°C ÷ +80°C
Parallel threads	UNI - ISO 228 / 1 (BSP)
Metric threads	UNI EN ISO 965-1
Filtering element porosity	36 µm

Standard materials

Type	AEB
Nipple	Copper-plated steel
Filtering element	Sintered spherical bronze

Silencers
Sintered, series ACT

Main features

Type	Description	Symbol
ACT	Silencer with truncated cone with slot cut on top, fully made of sintered spherical bronze.	



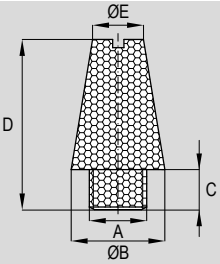

Dimensions

Code	Item	Symbol	A	Ø B	C	D	Ø E	Weight (g)
010265	ACT18		G1/8"	11	5,5	21	8	-
010266	ACT14		G1/4"	14	9	27	10,5	-
010262	ACT38		G3/8"	18	11	36	15	-
010263	ACT12		G1/2"	24	11	44	19	-
010264	ACT34		G3/4"	30	13	65	23,5	-
010261	ACT01		G1"	36	15	75	26	-

Technical data

Type	ACT
Fluid	Compressed air
Pressure range	0 ÷ 10 bar
Temperature range	-10°C ÷ +80°C
Parallel threads	UNI - ISO 228 / 1 (BSP)
Filtering element porosity	36 µm

Standard materials

Type	ACT
Nipple	Sintered spherical bronze
Filtering element	Sintered spherical bronze

Silencers
Sintered, series ACI

Main features

Type	Description	Symbol
ACI	Silencer with truncated cone filtering element in sintered spherical bronze and stem in brass.	



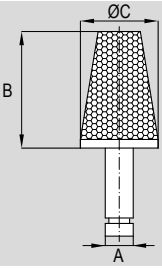

Dimensions

Code	Item	Symbol	A	B	Ø C	Weight (g)
010290	ACI04		4	15	10	-
010291	ACI06		6	18	13	-
010292	ACI08		8	25	17	-

Technical data

Type	ACI
Fluid	Compressed air
Pressure range	0 ÷ 10 bar
Temperature range	-10°C ÷ +80°C
Filtering element porosity	36 µm

Standard materials

Type	ACI
Stem	Brass
Filtering element	Sintered spherical bronze

Silencers
Sintered, series AEP

Main features

Type	Description	Symbol
AEP	Silencer with flat filtering element in sintered spherical bronze and nipple in brass with hexagonal wrench.	



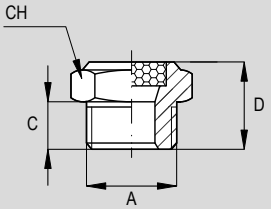

Dimensions

Code	Item	Symbol	A	CH	C	D	Weight (g)
010097	AEPM5		M5x0,8	8	4	8,5	-
010091	AEP18		G1/8”	13	6	13	-
010098	AEP18F		G1/8”F	13	6	13	-
010092	AEP14		G1/4”	16	8	17	-
010093	AEP38		G3/8”	19	7,5	17	-
010094	AEP12		G1/2”	24	10	19	-
010095	AEP34		G3/4”	30	10	19	-
010096	AEP01		G1”	36	10	20	-

Technical data

Type	AEP
Fluid	Compressed air
Pressure range	0 ÷ 10 bar
Temperature range	-10°C ÷ +80°C
Parallel threads	UNI - ISO 228 / 1 (BSP)
Metric threads	UNI EN ISO 965-1
Filtering element porosity	100 µm

Standard materials

Type	AEP
Nipple	Brass
Filtering element	Sintered spherical bronze

Silencers
Sintered, series AFE

Main features

Type	Description	Symbol
AFE	Silencer with stainless steel mesh filtering element and nipple in brass with hexagonal wrench.	



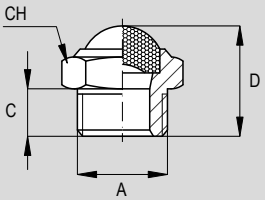

Dimensions

Code	Item	Symbol	A	CH	C	D	Weight (g)
010317	AFEM5		M5x0,8	8	4	8,5	-
010311	AFE18		G1/8”	13	6	16	-
010318	AFE18F		G1/8”F	13	6	16	-
010312	AFE14		G1/4”	16	8	19	-
010313	AFE38		G3/8”	19	7,5	19	-
010314	AFE12		G1/2”	24	10	22	-
010315	AFE34		G3/4”	30	10	25	-
010316	AFE01		G1”	36	10	29	-

Technical data

Type	AFE
Fluid	Compressed air
Pressure range	0 ÷ 10 bar
Temperature range	-10°C ÷ +80°C
Parallel threads	UNI - ISO 228 / 1 (BSP)
Metric threads	UNI EN ISO 965-1
Filtering element porosity	-

Standard materials

Type	AFE
Nipple	Brass
Filtering element	Stainless Steel

Silencers
Sintered, series AP

Main features

Type	Description	Symbol
AP	Insert silencer with flat filtering element in sintered spherical bronze and nipple in brass.	



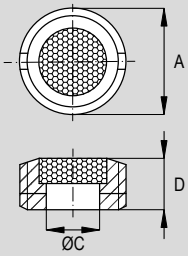

Dimensions

Code	Item	Symbol	A	Ø C	D	Weight (g)
010251	AP18		G1/8”	6	4,5	-
010252	AP14		G1/4”	8	6,5	-
010253	AP38		G3/8”	9,5	7,5	-
010254	AP12		G1/2”	12,5	8,5	-
010255	AP34		G3/4”	19	8,5	-
010256	AP01		G1”	24	10,5	-

Technical data

Type	AP
Fluid	Compressed air
Pressure range	0 ÷ 10 bar
Temperature range	-10°C ÷ +80°C
Parallel threads	UNI - ISO 228 / 1 (BSP)
Filtering element porosity	50 µm

Standard materials

Type	AP
Nipple	Brass
Filtering element	Sintered spherical bronze

Silencers
Sintered, series AT

Main features

Type	Description	Symbol
AT	Silencer with cylindrical filtering element in sintered spherical bronze and nipple in brass.	



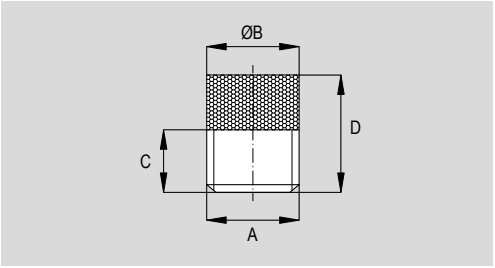

Dimensions

Code	Item	Symbol	A	Ø B	C	D	Weight (g)
010211	AT18		G1/8”	10	4	10	-
010212	AT14		G1/4”	13	7	15	-

Technical data

Type	AT
Fluid	Compressed air
Pressure range	0 ÷ 10 bar
Temperature range	-10°C ÷ +80°C
Parallel threads	UNI - ISO 228 / 1 (BSP)
Filtering element porosity	36 µm

Standard materials

Type	AT
Nipple	Brass
Filtering element	Sintered spherical bronze

Silencers
Sintered, series ATT

Main features

Type	Description	Symbol
ATT	Silencer with cylindrical filtering element with slot cut on top in sintered spherical bronze and nipple in brass.	



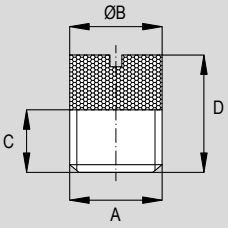

Dimensions

Code	Item	Symbol	A	Ø B	C	D	Weight (g)
010231	ATT18		G1/8”	9	4	12,5	-
010232	ATT14		G1/4”	12,5	6	14	-
010233	ATT38		G3/8”	16	7,5	16	
010234	ATT12		G1/2”	20,5	10	19,5	
010235	ATT34		G3/4”	26	11	23	
010236	ATT01		G1”	33	13	24	-

Technical data

Type	ATT
Fluid	Compressed air
Pressure range	0 ÷ 10 bar
Temperature range	-10°C ÷ +80°C
Parallel threads	UNI - ISO 228 / 1 (BSP)
Filtering element porosity	36 µm

Standard materials

Type	ATT
Nipple	Brass
Filtering element	Sintered spherical bronze

Silencers
Metal





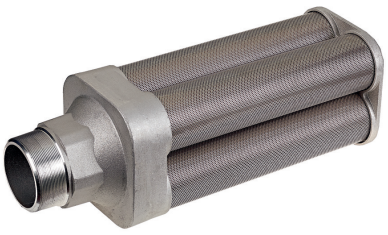

Code key

Type	Size [1]	Options	
M	**12**	**NPT**	**/40**

Type

MI
M
MR
MD

Size [1]

01 = 1/8"
02 = 1/4"
00 = 3/8"
05 = 1/2"
07 = 3/4"
10 = 1"
12 = 1 1/4"
15 = 1 1/2"
20 = 2"
30 = 3"
40 = 4"
60 = 6"

Options

NPT =	NPT thread (according to ANSI B 1.20.1)
/40 [2] =	Up to 40 bar

How to order

Type	Size	Option	Option
M	**12**	**NPT**	**/40**

Notes

For standard materials see single product data sheets.

For spare cartridgers of types M, MR and MD, please see page 4.155.19

(1) For matching between type and thread, see from page 4.155.11; for the specific type, see the following pages.

(2) Available only for types M and MD. The silencer with /40 option have same efficency features of standard silencers, but in addition is equipped with a safety valve in the top, which allows air to discharge as the output pressure change. Thus avoid risk of damages due to "water hammer" and pulsating pressures.

Metal silencers

Type			Taper threads (BSPT)	Data sheet and code page
MI	Metal slencer with zinc-plated steel body and Stainless Steel cartridge		1/8", 1/4", 3/8", 1/2", 3/4" 1", 1 1/4", 1 1/2", 2"	4.155.12
M	Single chamber metal muffler, with aluminium body and noise-absorbing material cartridge covered by a metal drilled plate		1/8", 1/4", 3/8", 1/2", 3/4" 1", 1 1/4", 1 1/2", 2"	4.155.13
	Four chamber metal muffler, with aluminium body and noise-absorbing material cartridge covered by a metal drilled plate		3", 4", 6"	4.155.14
MR	Single chamber metal muffler, with aluminium body and noise-absorbing material cartridge covered by a metal drilled plate. Equipped with a balanced valve.		1/8", 1/4", 3/8", 1/2", 3/4" 1", 1 1/4", 1 1/2", 2"	4.155.15
	Four chamber metal muffler, with aluminium body and noise-absorbing material cartridge covered by a metal drilled plate. Equipped with a balanced valve.		3", 4", 6"	4.155.16
MD	Single chamber metal muffler, with aluminium body and noise-absorbing material cartridge covered by a metal drilled plate. Equipped with a balanced valve. For air dryers.		1/8", 1/4", 3/8", 1/2", 3/4" 1", 1 1/4", 1 1/2", 2"	4.155.17
	Four chamber metal muffler, with aluminium body and noise-absorbing material cartridge covered by a metal drilled plate. Equipped with a balanced valve. For air dryers.		3", 4", 6"	4.155.18

Silencers
Metal, series MI

Main features

Type	Description	Symbol
MI	Metal slencer with zinc-plated steel body and Stainless Steel cartridge	



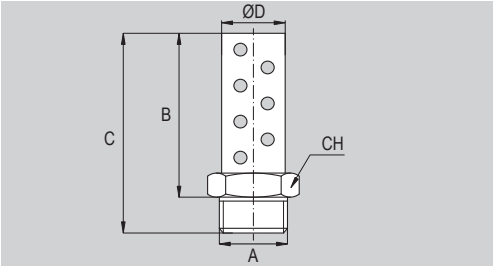

Dimensions

Code	Item	Symbol	A	B	CH	C	Ø D
011040	MI01		R1/8”	28	11	35	11
011041	MI02		R1/4”	33	14	44	14
011042	MI00		R3/8”	43	18	56	17,5
011043	MI05		R1/2”	52	22	68	22
011044	MI07		R3/4”	64	27	81	27
011045	MI10		R1”	76	35	98	33
011046	MI12		R1-1/4”	90	46	113	42
011047	MI15		R1-1/2”	100,6	50	124,2	50
011048	MI20		R2”	114,7	60	141,2	60

Technical data

Type	MI								
Size	1/8"	1/4"	3/8"	1/2"	3/4"	1"	1 1/4"	1 1/2"	2"
Fluid	Compressed air								
Pressure range	0 ÷ 12 bar								
Temperature range	-25°C ÷ +120°C								
Taper threads	UNI EN 10226-1 (BSPT)								
Flow at 6 bar with ΔP 1 bar	1.200 Nl/min.	2.200 Nl/min.	3.800 Nl/min.	6.100 Nl/min.	11.300 Nl/min.	15.800 Nl/min.	22.500 Nl/min.	24.800 Nl/min.	49.700 Nl/min.
Flow tolerance	±10%								

Standard materials

Type	MI
Body	Zinc-plated steel
Cartridge	Stainless Steel

Main features

Type	Description	Symbol
M	Single chamber metal muffler, with aluminium body and noise-absorbing material cartridge covered by a metal drilled plate	



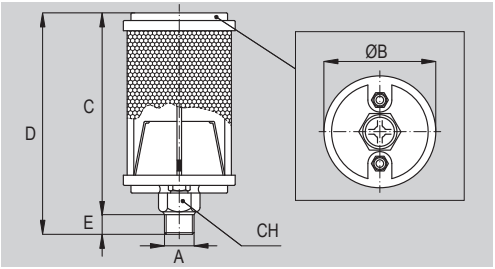

Dimensions

Code	Item	Symbol	A	Ø B	C	D	E	CH
011001	M01		R1/8”	47	75,5	83,5	8	11
011002	M02		R1/4”	47	100	112	12	14
011003	M00		R3/8”	66	119	131	12	19
011004	M05		R1/2”	80	136	152	16	22
011005	M07		R3/4”	86	167	184	17	29
011006	M10		R1”	99	203	222	19	35
011007	M12		R1-1/4”	99	199	222	23	43
011008	M15		R1-1/2”	133	322	344	22	51
011009	M20		R2”	133	452	479	27	61

Technical data

Type	M								
Size	1/8"	1/4"	3/8"	1/2"	3/4"	1"	1 1/4"	1 1/2"	2"
Fluid	Compressed air								
Pressure range	0 ÷ 8,5 bar								
Temperature range	-25°C ÷ +100°C								
Taper threads	UNI EN 10226-1 (BSPT)								
Flow at 6 bar with ΔP 1 bar	1.550 Nl/min.	3.100 Nl/min.	6.210 Nl/min.	9.000 Nl/min.	19.760 Nl/min.	28.230 Nl/min.	45.160 Nl/min.	73.390 Nl/min.	118.600 Nl/min.
Flow tolerance	±10%								

Standard materials

Type	M
Body	Aluminium
Tie-rods	Steel
Cartridge*	Noise-absorbing material covered by metal drilled plate

*For spare parts see page 4.155.19

Function

Mufflers type M are suitable for large plant exhausts thanks to their high flow and noise reducing capacity.

Silencers
Metal, series M

Main features

Type	Description	Symbol
M	Four chamber metal muffler, with aluminium body and noise-absorbing material cartridge covered by a metal drilled plate	



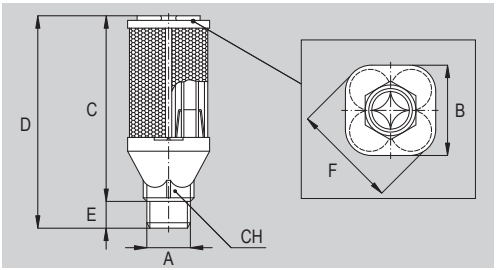

Dimensions

Code	Item	Symbol	A	B	C	D	E	F	CH
011501	M30		R3”	178	550	595	45	215	93
011502	M40		R4”	203	555	595	40	240	120
011503	M60		R6”	279	753	795	42	335	160

Technical data

Type	M		
Size	3"	4"	6"
Fluid	Compressed air		
Pressure range	0 ÷ 8,5 bar		
Temperature range	-25°C ÷ +100°C		
Taper threads	UNI EN 10226-1 (BSPT)		
Flow at 6 bar with ΔP 1 bar	254.000 Nl/min.	508.000 Nl/min.	1.130.000 Nl/min.
Flow tolerance	±10%		

Standard materials

Type	M
Body	Aluminium
Tie-rods	Steel
Cartridge*	Noise-absorbing material covered by metal drilled plate

*For spare parts see page 4.155.19

Function

Mufflers type M are suitable for large plant exhausts thanks to their high flow and noise reducing capacity.

Main features

Type	Description	Symbol
MR	Single chamber metal muffler, with aluminium body and noise-absorbing material cartridge covered by a metal drilled plate. Equipped with a balanced valve.	



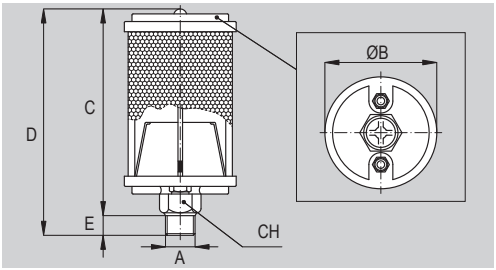

Dimensions

Code	Item	Symbol	A	Ø B	C	D	E	CH
011550	MR01		R1/8"	47	75,5	87	8	11
011551	MR02		R1/4"	47	100	117	12	14
011552	MR00		R3/8"	66	119	136	12	19
011553	MR05		R1/2"	80	136	157	16	22
011554	MR07		R3/4"	86	167	189	17	29
011555	MR10		R1"	99	203	227	19	35
011556	MR12		R1-1/4"	99	199	227	23	43
011557	MR15		R1-1/2"	133	322	350	22	51
011558	MR20		R2"	133	452	485	27	61

Technical data

Type	MR								
Size	1/8"	1/4"	3/8"	1/2"	3/4"	1"	1 1/4"	1 1/2"	2"
Fluid	Compressed air								
Pressure range	0 ÷ 12 bar								
Temperature range	-25°C ÷ +100°C								
Taper threads	UNI EN 10226-1 (BSPT)								
Flow at 6 bar with ΔP 1 bar	1.550 Nl/min.	3.100 Nl/min.	6.210 Nl/min.	9.000 Nl/min.	19.760 Nl/min.	28.230 Nl/min.	45.160 Nl/min.	73.390 Nl/min.	118.600 Nl/min.
Flow tolerance	±10%								

Standard materials

Type	MR
Body	Aluminium
Tie-rods	Steel
Cartridge*	Noise-absorbing material covered by metal drilled plate

*For spare parts see page 4.155.19

Function

The silecers type MR are equipped with a special balanced relief valve, which automatically discharges excess air when the outlet pressure exceeds the operating limit of the component to avoid damages.

Silencers
Metal, series MR

Main features

Type	Description	Symbol
MR	Four chamber metal muffler, with aluminium body and noise-absorbing material cartridge covered by a metal drilled plate. Equipped with a balanced valve.	



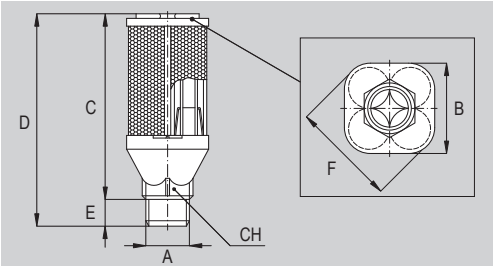

Dimensions

Code	Item	Symbol	A	B	C	D	E	F	CH
011559	MR30		R3”	178	550	600	45	215	93
011560	MR40		R4”	203	555	600	40	240	120
011561	MR60		R6”	279	753	800	42	335	160

Technical data

Type	MR		
Size	3"	4"	6"
Fluid	Compressed air		
Pressure range	0 ÷ 12 bar		
Temperature range	-25°C ÷ +100°C		
Taper threads	UNI EN 10226-1 (BSPT)		
Flow at 6 bar with ΔP 1 bar	254.000 Nl/min.	508.000 Nl/min.	1.130.000 Nl/min.
Flow tolerance	±10%		

Standard materials

Type	MR
Body	Aluminium
Tie-rods	Steel
Cartridge*	Noise-absorbing material covered by metal drilled plate

*For spare parts see page 4.155.19

Function

The silecers type MR are equipped with a special balanced relief valve, which automatically discharges excess air when the outlet pressure exceeds the operating limit of the component to avoid damages.

Silencers
Metal, series MD

Main features

Type	Description	Symbol
MD	Single chamber metal muffler, with aluminium body and noise-absorbing material cartridge covered by a metal drilled plate. Equipped with a balanced valve. For air dryers.	



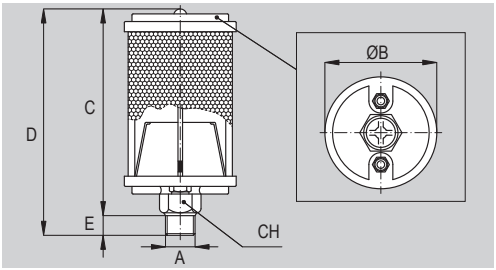

Dimensions

Code	Item	Symbol	A	Ø B	C	D	E	CH
011540	MD01		R1/8”	47	75,5	87	8	11
011523	MD02		R1/4”	47	100	117	12	14
011524	MD00		R3/8”	66	119	136	12	19
011525	MD05		R1/2”	80	136	157	16	22
011526	MD07		R3/4”	86	167	189	17	29
011527	MD10		R1”	99	203	227	19	35
011528	MD12		R1-1/4”	99	199	227	23	43
011529	MD15		R1-1/2”	133	322	350	22	51
011530	MD20		R2”	133	452	485	27	61

Technical data

Type	MD								
Size	1/8"	1/4"	3/8"	1/2"	3/4"	1"	1 1/4"	1 1/2"	2"
Fluid	Compressed air								
Pressure range	0 ÷ 12 bar								
Temperature range	-25°C ÷ +100°C								
Taper threads	UNI EN 10226-1 (BSPT)								
Flow at 6 bar with ΔP 1 bar	1.550 Nl/min.	3.100 Nl/min.	6.210 Nl/min.	9.000 Nl/min.	19.760 Nl/min.	28.230 Nl/min.	45.160 Nl/min.	73.390 Nl/min.	118.600 Nl/min.
Flow tolerance	±10%								

Standard materials

Type	MD
Body	Aluminium
Tie-rods	Steel
Cartridge*	Noise-absorbing material with dustproof layer and metal net protection, covered by metal drilled plate

*For spare parts see page 4.155.19

Function

Specifically designed to manage the service issues associated with desiccant regenerative type air dryers, which often expel air laden with moisture and desiccant dust. The primary stage traps particulates, allowing cleaner air to escape freely through the secondary stage, which also have a noise reduction function. Equipped with a safety valve to avoid damages (standard is maximum working pressure 12 bar, while for higher pressure /40 option is required allowing to withstand up to 40 bar).

Silencers
Metal, series MD

Main features

Type	Description	Symbol
MD	Four chamber metal muffler, with aluminium body and noise-absorbing material cartridge covered by a metal drilled plate. Equipped with a balanced valve. For air dryers.	



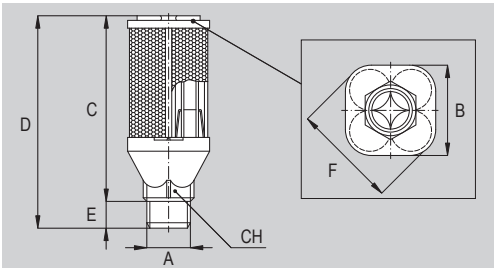

Dimensions

Code	Item	Symbol	A	B	C	D	E	F	CH
011531	MD30		R3”	178	550	600	45	215	93
011532	MD40		R4”	203	555	600	40	240	120
011533	MD60		R6”	279	753	800	42	335	160

Technical data

Type	MD		
Size	3"	4"	6"
Fluid	Compressed air		
Pressure range	0 ÷ 12 bar		
Temperature range	-25°C ÷ +100°C		
Taper threads	UNI EN 10226-1 (BSPT)		
Flow at 6 bar with ΔP 1 bar	254.000 Nl/min.	508.000 Nl/min.	1.130.000 Nl/min.
Flow tolerance	±10%		

Standard materials

Type	MD
Body	Aluminium
Tie-rods	Steel
Cartridge*	Noise-absorbing material with dustproof layer and metal net protection, covered by metal drilled plate

*For spare parts see page 4.155.19

Function

Specifically designed to manage the service issues associated with desiccant regenerative type air dryers, which often expel air laden with moisture and desiccant dust. The primary stage traps particulates, allowing cleaner air to escape freely through the secondary stage, which also have a noise reduction function. Equipped with a safety valve to avoid damages (standard is maximum working pressure 12 bar, while for higher pressure /40 option is required allowing to withstand up to 40 bar).

Noise-absorbing material covered by metal drilled plate, for metal silencers type M* e MR



Size	Code	Description	Matching
1/8”	011058	Single cartridge	M* MR
1/4”	011059	Single cartridge	
3/8”	011060	Single cartridge	
1/2”	011061	Single cartridge	
3/4”	011062	Single cartridge	
1”	011063	Single cartridge	
1-1/4”			
1-1/2”	011065	Single cartridge	
2”	011066	Single cartridge	
3”	011067	Single cartridge	
3”	011068	Kit four cartridges	
4”	011069	Single cartridge	
4”	011070	Kit four cartridges	
6”	011071	Single cartridge	
6”	011072	Kit four cartridges	

*Compatible also with option /40

Noise-absorbing material with dustproof layer and metal net protection covered by metal drilled plate, for metal silencers type MD*



Size	Code	Description	Matching
1/8”	011077	Single cartridge	MD*
1/4”	011087	Single cartridge	
3/8”	011083	Single cartridge	
1/2”	011078	Single cartridge	
3/4”	011085	Single cartridge	
1”	011082	Single cartridge	
1-1/4”			
1-1/2”	011086	Single cartridge	
2”	011081	Single cartridge	
3”	011079S	Single cartridge	
3”	011079	Kit four cartridges	
4”	011080S	Single cartridge	
4”	011080	Kit four cartridges	
6”	011088S	Single cartridge	
6”	011088	Kit four cartridges	

*Compatible also with option /40

EXHAUST
conveyors



Find out our
key products

- **Solution for most applications**
- **Easy and intuitive choice**
- **Excellent value for money**
- **Wide availability**
- **Fast delivery**

Main features and certifications

Exhaust conveyors. For plants where many ehasust converge into a single silenced element.
Supplied as standard in compliance to Reach and RoHS directives.

Type CSC1

from page 4.170.10



Exhaust conveyors with acetalic resin body.



Exhaust conveyors
Series CSC1

Main features

Type	Description	Symbol
CSC1	Exhaust conveyors with acetalic resin (POM) body	



Function

The exhaust conveyor series CSC is useful and practical to be used when more exhausts of one or more machines need to be conveyed into one single silencing element; another advantage, compared with the traditional silencer, is that the discharge conveyor keeps the working environment clean, because it not spray the atomised oil from the system in the air.
The various tubes from different machines are connected with the exhaust conveyor upper side by pre mounted push-in fittings (1" female BSP thread can also be used).
The air mixed with oil flows into the respective chamber and into a thick aluminium wire filter which separates air from oil; the air passes through the filter and than flow outside through a second sintered bronze filter (covering the whole conveyor circumference), while the oil drop in a vessel below, which can be emptied by a manual exhaust placed at the bottom of the component.

Technical data

Type	CSC1
Fluid	Compressed air
Pressure range	0 ÷ 12 bar
Temperature range	-20°C ÷ +70°C
Connections	n° 10 push-in fittings for tube Øe. 8 mm; n° 1 BSP female size 1"
Tubes	Calibrated Nylon (PA6), Polyurethane (PU) and Rilsan (PA11)
Tubes tolerance	±0,05 mm

Standard materials

Type		CSC1
1	Body	Acetalic resin (POM)
2	Separator filter	Aluminium mesh
3	External filter	Sintered bronze
4	Connections	Brass
5	Manual exhaust	Brass
6	Bracket	White zinc-plated steel

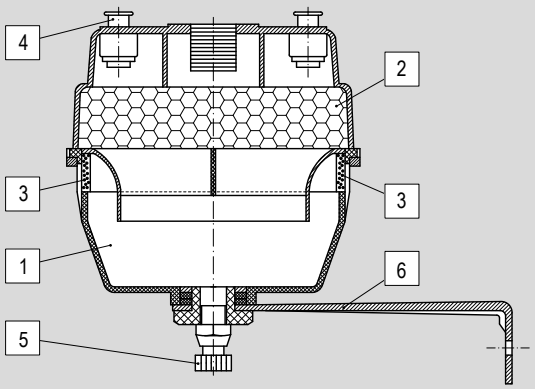

Standard dimensions

Type: **CSC1**

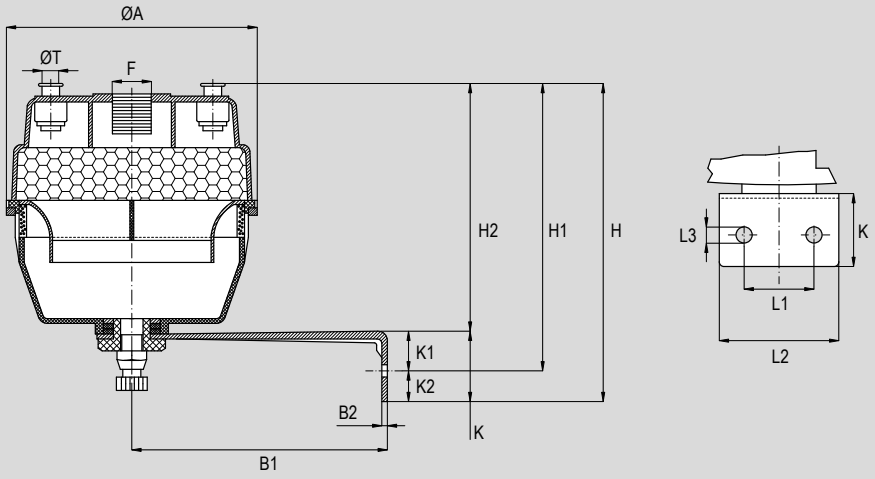

Code	Item	Symbol	ØA	B1	B2	F	ØT	H	H1	H2	K	K1	K2	L1	L2	L3	Weight (g)
080001	CSC1		131	133	3	G1"	8	163,5	147,5	128	33,5	19,5	16	39	59	7	-

Notes

Notes

STAINLESS STEEL COMPONENTS

CHAPTER 5



Stainless Steel cylinders

Series		Type	Page
Stainless Steel Cylinders ISO 6432		MDMX, MDMXA	5.2.1
Stainless Steel Cylinders ISO 15552		AMX	5.5.1
Stainless Steel Round Cylinders		RXD	5.11.1
		RDX, RDMX, RDMAX	5.13.1
Stainless Steel Compact Cylinders ISO 21287		CIXS, CIX	5.20.1

Stainless Steel rod accessories for cylinders

Page 5.50.1

Description			Page
Stainless Steel Clevis		FFX	5.52.1
Stainless Steel Bearings		RFX	5.54.1
Stainless Steel Couplings		GBX, GCX	5.55.1

Stainless Steel mountings for cylinders

Page 5.70.1

Description			Page
Stainless Steel mountings for cylinders ISO 6432		for type MDMX, MDMAX	5.71.1
Stainless Steel mountings for round cylinders		for type RDX, RDMX, RDMAX	5.73.1
		for series RXD	5.73.50
Stainless Steel mountings for cylinders ISO 15552		for type AMX	5.75.1
Stainless Steel mountings for compact cylinders ISO 21287		for type CIXS, CIX	5.77.1
Screws and grains		VTCEIX, VBTRX	5.79.1

Stainless Steel valevs

Series		Type	Page
Stainless Steel solenoid operated valves		AX1E, AX1K, AX1EG, AX1KG	5.102.1
Stainless Steel air operated valves		AX1P	5.115.1
Stainless Steel solenoid operated NAMUR valves		AX1NE, AX1NEG	5.120.1
Stainless Steel solenoid operated valves, ATEX coils and connectors		Conforming to 2014/34/EU ATEX Directive, various classifications	5.150.1
Stainless Steel ancillary valves		MVSX, VLSX, FFX, VSRX	5.160.1

Stainless Steel modular units — Page 5.202.1

Series		Type	Page
Stainless Steel Filters		FX	5.202.20
Stainless Steel Regulators		RX	5.202.50
Stainless Steel Lubricators		LX	5.202.80
Stainless Steel Filter-regulators		FRRX	5.202.110
Stainless Steel Filter-regulators+lubricators		FRRLX	5.202.140

Stainless Steel fittings and couplings

Series		Type	Page
Stainless Steel Push-in fittings		RX	5.302.1
Stainless Steel Rapid fittings		CX	5.304.1
Stainless Steel Compression fittings		OX	5.306.1
Stainless Steel Standard fittings		AX	5.308.1
Stainless Steel Couplings		GXA, GXF, GGLX, GGAX	5.320.1

Stainless Steel air-reservoirs

Series		Type	Page
Stainless Steel Air-reservoirs		SBCX	5.350.1
Stainless Steel Accessories for air-reservoirs		STSBX, AX	5.350.50

Stainless Steel flow and exhaust regulators — Page 5.370.1

Series		Type	Page
Stainless Steel In-line flow regulators		VX52, VX53	5.371.1
Stainless Steel Flow regulators		VX15, VX18	5.372.1
Stainless Steel silenced exhaust regulators		AVRX	5.375.1

Stainless Steel accessories with integrated functions

Series		Type	Page
Stainless Steel Stop valves		VX45	5.380.1

Stainless Steel silencers

Series		Type	Page
Stainless Steel Silencers		AFEX, AEX, AEPX, AERX	5.390.1

Notes

STAINLESS STEEL
cylinders ISO 6432



Find out our
key products

- **Solution for most applications**
- **Easy and intuitive choice**
- **Excellent value for money**
- **Wide availability**
- **Fast delivery**

Main features and certifications

Series of stainless steel cylinders conforming to ISO 6432 standards, available in bores from Ø 10 to 25, double acting magnetic. The heads joined to barrel through rolling ensure perfect tightening. Supplied as standard in compliance to Reach and RoHS directives, and SIL certified. On request can be supplied according to 2014/34/EU ATEX directive.

6432

Type MDMX Ø 10 ÷ 25

from page 5.2.20



Stainless Steel cylinders conforming to ISO 6432 standards, available in bores from Ø 10 to 25, double acting, magnetic, the heads joined to barrel through rolling ensure perfect tightening. Equipped with rubber bumpers to cushion the impact of the piston. Possibility of applying one or more magnetic reed switches. Complete with stainless steel head nut and rod nut.

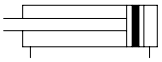

Type MDMAX Ø 20 ÷ 25

from page 5.2.40



Stainless Steel cylinders conforming to ISO 6432 standards, available in bores from Ø 20 to 25, double acting, magnetic, the heads joined to barrel through rolling ensure perfect tightening. Equipped with adjustable air cushioning on both ends. Possibility of applying one or more magnetic reed switches. Complete with stainless steel head nut and rod nut.

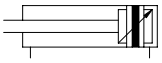

Options

Description	Symbol	Suffix
Through rod	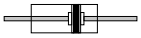	**P**
FKM seals -20°C ÷ +150°C	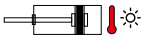	**V**
ATEX versions on request		**/ATEX**
Special versions on request		**/S**

The options, when this is possible, can be combined with each other. For options matching see page 5.2.4; For code key see page 5.2.5.

Options matching

Series	Bore	Model	Standard options matching		
			P	**V**	**/ATEX**
MDMX	Ø 10 ÷ 25	Standard	●	●	●
		Through rod (P)		●	●
MDMAX	Ø 20 ÷ 25	Standard	●	●	●
		Through rod (P)		●	●

Key
● allowed matching; – not allowed matching

Standard materials

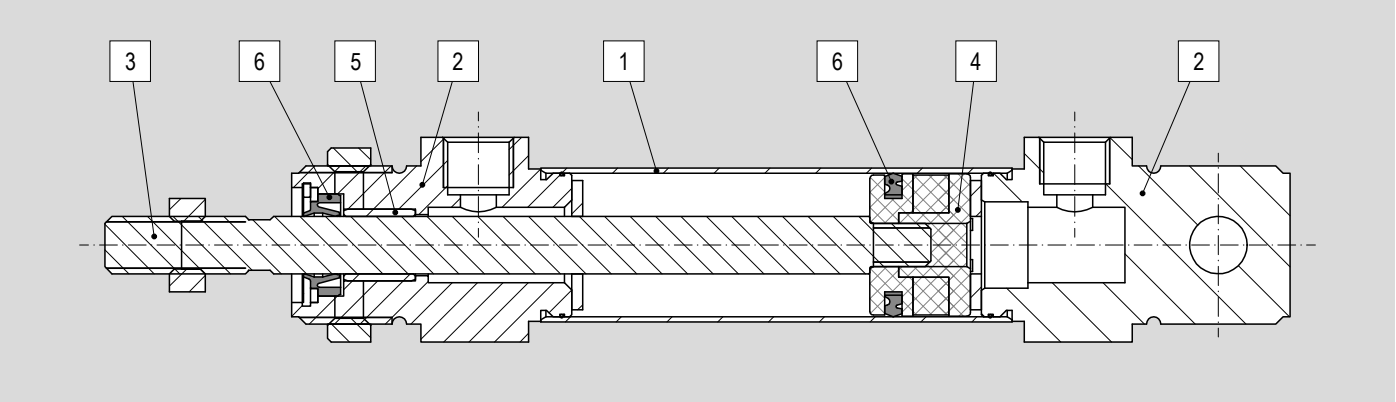

Position	Description	Material
1	Tube	Stainless Steel AISI 304
2	Heads	Stainless Steel AISI 304
3	Rod	Stainless Steel AISI 304
4	Piston	Brass
5	Bush	Sintered bronze
6	Seals	Polyurethane (PU)

Code key

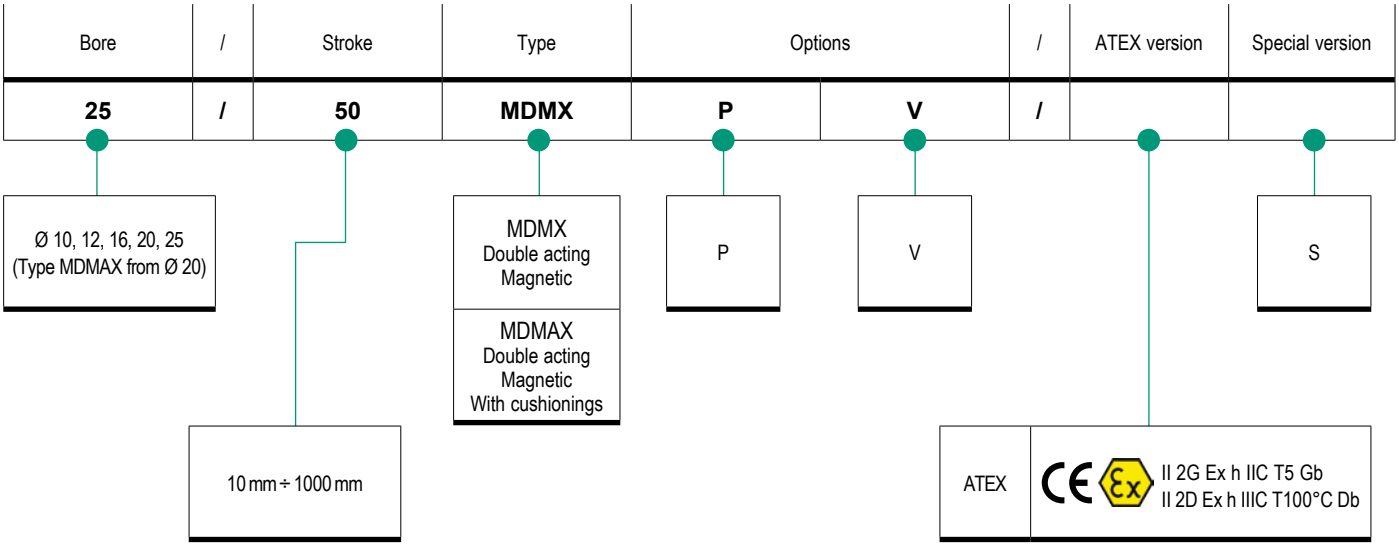

How to order

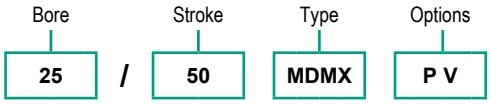

Notes

For standard materials see the side table.

Options in the same grid are alternative to each others.

For further information on options and their matching, see page 5.2.3 and page 5.2.4

For further infomation on the ATEX 2014/34/EU Directive, on classifications and protections, see from page III.1

Accessories

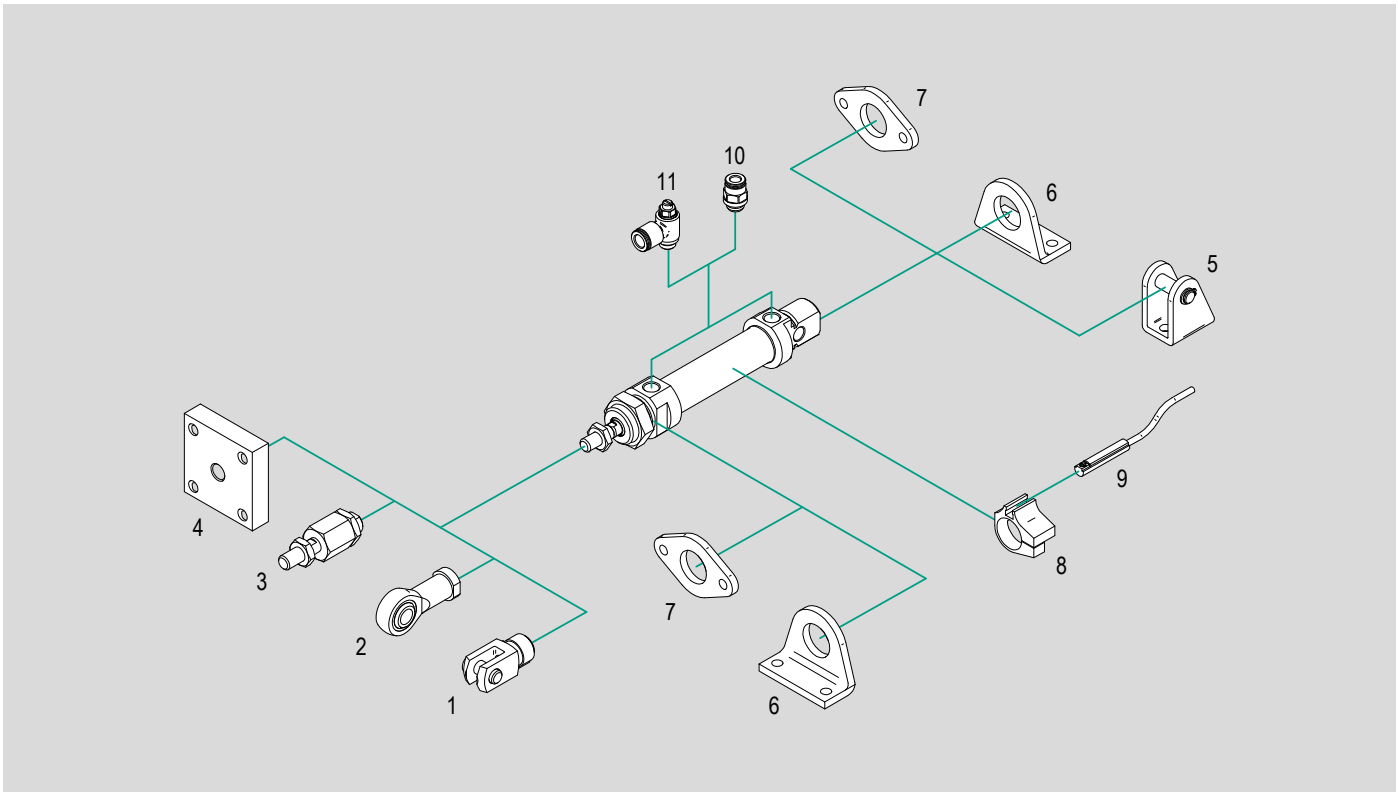

N.	Cylinder bore	Item	Description	Compliance	Matching		Code key page	Data sheet page
					MDMX	MDMAX		
1	Ø 10 ÷ 25	FFX..ISO	Stainless Steel female clevis with pin and seeger	ISO 8140	●	●	5.2.90	5.52.1
2	Ø 10 ÷ 25	RFX..SE	Stainless Steel bearing heads (DIN 648K) with female thread	ISO 8139	●	●		5.54.1
3	Ø 10 ÷ 25	GBX..	Stainless Steel self-aligning articulated coupling	ISO PM5	●	●		5.55.1
4	Ø 25	GCX..	Stainless Steel self-aligning coupling	-	●	●		5.57.1
5	Ø 12 ÷ 25	CFX..	Stainless Steel rear clevis	ISO MP3	●	●		5.71.1
6	Ø 12 ÷ 25	PX..	Stainless Steel high foot	ISO MS3	●	●		
7	Ø 12 ÷ 25	FX..	Stainless Steel flange	ISO MF8	●	●		5.71.2
8	Ø 10 ÷ 25	AFM..	Bracket for magnetic reed switch T groove	-	●	●		1.120.1
9	Ø 10 ÷ 25	ASV..	Magnetic reed switch T groove		●	●		1.110.10
		MK..	ATEX magnetic reed switch T groove	2014/34/UE	●	●		1.113.1
10	Ø 10 ÷ 25	RX..	Stainless steel push-in fittings	-	●	●	5.302.1	
11	Ø 10 ÷ 25	VX..C	Stainless Steel flow controls, for cylinders		●	●	5.372.1	

Key
● matching accessory; – not matching accessory

Main features

10 ÷ 25

Bores Ø

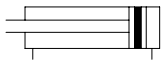

Double acting
Magnetic

MDMX

Type



Technical data

Bore Ø	10	12	16	20	25
Fluid	Filtered compressed air with or without lubrication. Lubrication, if started, must be continued.				
Pressure range	1 ÷ 10 bar				
Temperature range	-20°C ÷ +80°C (standard) -20°C ÷ +150°C (V)				
Strokes	10 ÷ 1000 mm				
Ports	M5			1/8"	
Rod thread	M4	M6		M8	M10x1,25

Standard strokes

	MDMX Bore Ø mm				
Stroke mm	10	12	16	20	25
10					
25					
50					
80					
100					
125					
160					
200					
250					
320					
400					
500					

Key
Standard stroke

Standard dimensions

Type: **MDMX**

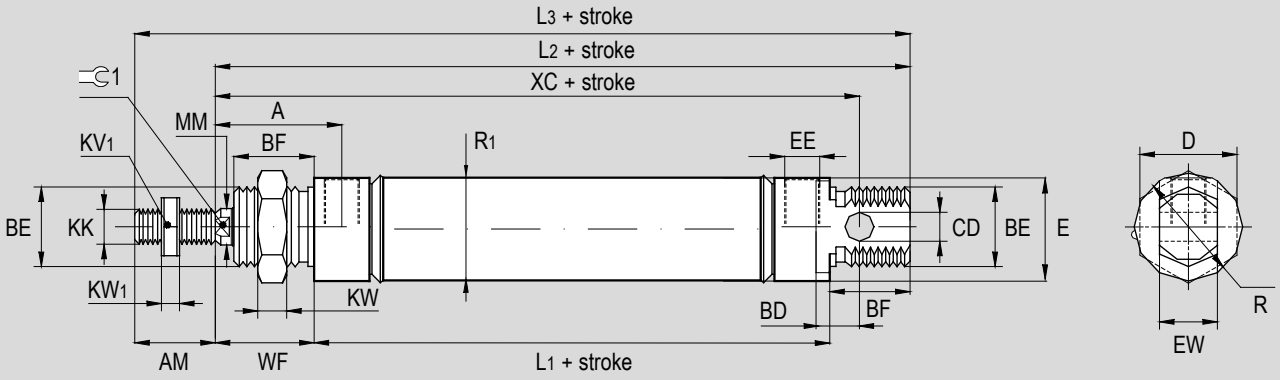

Ø (mm)	KK	MM	BE	R	EW	R_1	E	CD	AM	XC	L_2
10	M4x0,7	4	M12x1,25	16	-	11,27	15	4	12	64	74
12	M6	5	M16x1,5	19	12	13,27	18	6	16	75	88
16	M6	6	M16x1,5	20	12	17,27	19	6	16	82	96
20	M8	8	M22x1,5	27	16	21,27	25,5	8	20	95	111
25	M10x1,25	10	M22x1,5	30	16	26,5	28	8	22	104	118

Ø (mm)	L_1	WF	BF	A	BD	⊂1	EE	L_3	D	KW	KW_1	KV
10	46	16	12	21	6	-	M5	86	15	-	-	-
12	48	22	18	27	9	-	M5	104	18	-	-	-
16	56	22	18	27	9	5	M5	112	24	6	3	10
20	67	24	20	32	12	7	G1/8"	131	27	8	4	13
25	67	29	22	37	12	9	G1/8"	140	27	8	5	17

Dimensions with options

Type: **...P**

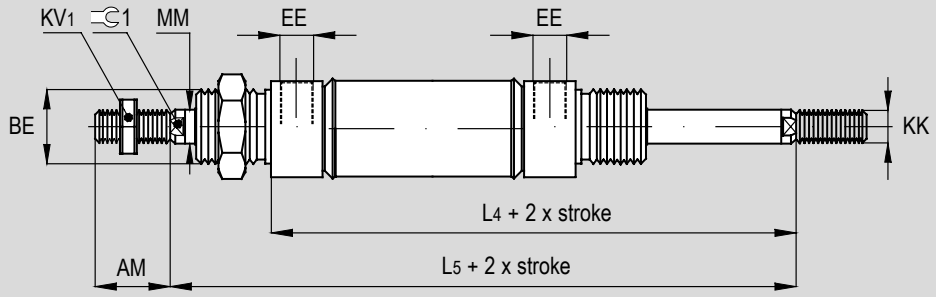

Ø mm	L_4	L_5	EE	BE	KK	⊂1	KV_1	MM	AM
10	74	78	M5	M12x1,25	M4x0,7	-	-	4	12
12	74	78	M5	M16x1,5	M6	-	-	5	16
16	74,5	96,5	M5	M16x1,5	M6	5	10	6	16
20	92	116	G1/8"	M22x1,5	M8	7	13	8	20
25	97	125	G1/8"	M22x1,5	M10x1,25	9	17	10	22

Stainless Steel Cylinders ISO 6432
Series MDMAX

Main features

20 ÷ 25

Bores Ø

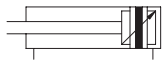

Double acting
Magnetic
With cushionings

MDMAX

Type



Technical data

Bore Ø	20	25
Fluid	Filtered compressed air with or without lubrication. Lubrication, if started, must be continued.	
Pressure range	1 ÷ 10 bar	
Temperature range	-20°C ÷ +80°C (standard) -20°C ÷ +150°C (V)	
Strokes	25 ÷ 1000 mm	
Ports	1/8"	
Rod thread	M8	M10x1,25
Cushion length	17 mm	20 mm

Standard strokes

	MDMAX Bore Ø mm	
Stroke mm	20	25
25		
50		
80		
100		
125		
160		
200		
250		
320		
400		
500		

Key
Standard stroke

Standard dimensions

Type: **MDMAX**

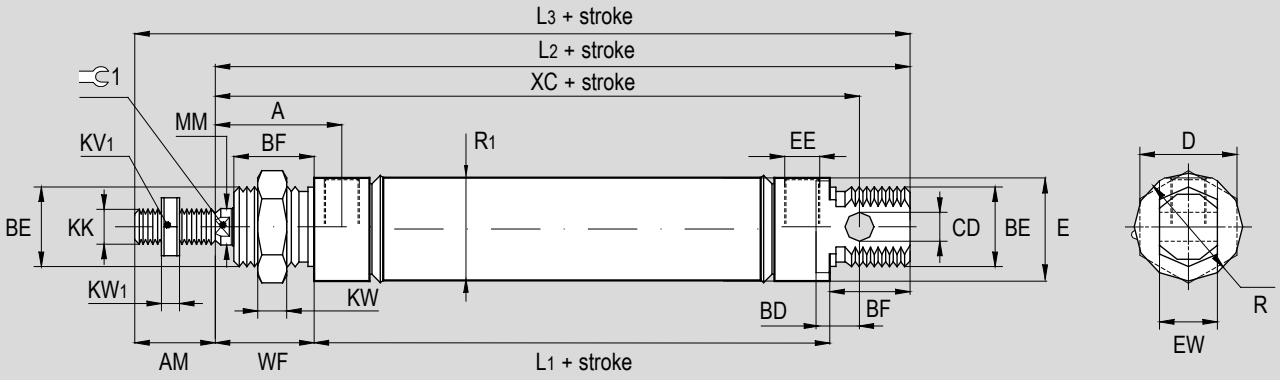

Ø (mm)	KK	MM	BE	R	EW	R_1	E	CD	AM	XC	L_2
20	M8	8	M22x1,5	27	16	21,27	25,5	8	20	95	111
25	M10x1,25	10	M22x1,5	30	16	26,5	28	8	22	104	118

Ø (mm)	L_1	WF	BF	A	BD	1	EE	L_3	D	KW	KW_1	KV
20	67	24	20	32	12	7	G1/8"	131	27	8	4	13
25	67	29	22	37	12	9	G1/8"	140	27	8	5	17

Dimensions with options

Type: **...P**

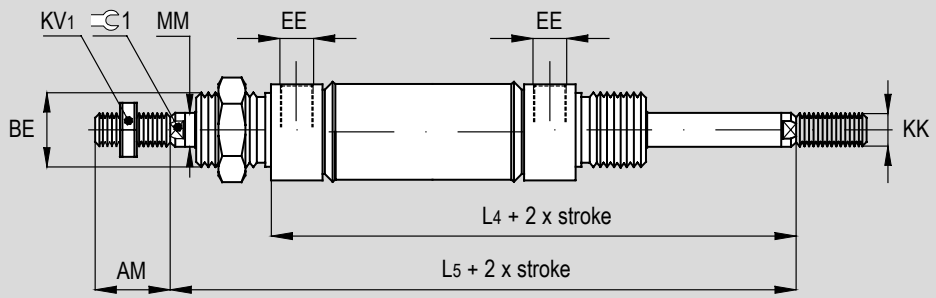

Ø mm	L_4	L_5	EE	BE	KK	1	KV_1	MM	AM
20	92	116	G1/8"	M22x1,5	M8	7	13	8	20
25	97	125	G1/8"	M22x1,5	M10x1,25	9	17	10	22

Stainless Steel female clevis with pin and seeger FFX..ISO



For cylinder Ø mm	Code	Item	Compliance
10	041052	FFX04ISO/DIN	ISO 8140
12-16	041053	FFX06ISO/DIN	
20	041054	FFX08ISO	
25	041055	FFX10ISO	

Stainless Steel bearing heads (DIN 648K) RFX..SE



For cylinder Ø mm	Code	Item	Compliance
10	041576	RFX5SE	ISO 8139
12-16	041570	RFX6SE	
20	041577	RFX8SE	
25	040009	RFX10SE	

Stainless Steel self-aligning articulated coupling GBX..



For cylinder Ø mm	Code	Item	Compliance
10	041734	GBX008	-
12-16	041735	GBX010	
20	041736	GBX020	
25	041737	GBX040	

Stainless Steel self-aligning coupling GCX..

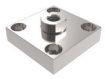

For cylinder Ø mm	Code	Item	Compliance
25	041728	GCXM10x1,25	-

Stainless Steel rear clevis with pin and seeger CFX..



For cylinder Ø mm	Code	Item	Compliance
12-16	040046	CFX12-16	ISO MP3
20-25	040047	CFX20-25	

Kit composed by rear clevis, pin and two seeger.

Stainless Steel high foot PX..



For cylinder Ø mm	Code	Item	Compliance
12-16	040026	PX12-16	ISO MS3
20-25	040027	PX20-25	

Supplied individually.

Stainless Steel flange FX..



For cylinder Ø mm	Code	Item	Compliance
12-16	040006	FX12-16	ISO MF8
20-25	040007	FX20-25	

Supplied individually.

Bracket for magnetic reed switch T groove AFM..



For cylinder Ø mm	Code	Item	Compliance
10	072902	AFM10	-
12	072903	AFM12	
16	072904	AFM16	
20	072905	AFM20	
25	072906	AFM25	

Magnetic reed switch T groove ASV..



For cylinder Ø mm	Code	Item	Cylinder matching
10 ÷ 25	070946	ASV1C525	MDMX* MDMAX*
	071863	ASV1C550	
	071864	ASV1C51K	
	071189	ASV1C5M8	
	073639	ASV4D225	
	070246	ASV4D2M8	
	074900	ASV7N225	
	070247	ASV7N2M8	
	070372	ASV7M2M8	
	072918	ASV1H525	

*With bracket type AFM.. for magnetic reed switches T groove

ATEX magnetic reed switch T groove MK..



For cylinder Ø mm	Code	Item	Compliance	Cylinder matching
10 ÷ 25	071120	MK500A	Ex 3D	MDMX* MDMAX*
	071108	MK502A	Ex II1G	

*With bracket type AFM.. for magnetic reed switches T groove

Notes

STAINLESS STEEL
cylinders ISO 15552



Find out our
key products

- **Solution for most applications**
- **Easy and intuitive choice**
- **Excellent value for money**
- **Wide availability**
- **Fast delivery**

Main features and certifications

Series of Stainless Steel AISI 316L cylinders conforming to ISO 15552 standards in bores from Ø 32 to 200, double acting, magnetic. Supplied as standard in compliance to Reach and RoHS directives, and SIL certified. Lubrication with synthetic grease long lasting, for applications with low start up, granting low friction and a permanent lubrication film. Fully composed by non-toxic elements conforming to FDA Directive section 21 CFR 178 about accidental contact with food (registered NSF H1). On request, can be also supplied according to the 2014/34/EU ATEX Directive.

15552

Type AMX Ø 32 ÷ 200

from page 5.5.20



Stainless Steel AISI 316L Cylinders ISO 15552, available in bores from Ø 32 to 200, double acting magnetic with adjustable cushioning, made with round tube and tie-rods.
Rod seal in special polyurethane developed for chemical and food&beverage.
The design is modern and clean, with care for the details. Particular attention was addressed to the end caps design, infacts no external casting cavities are present, thus avoid contamination traps. In order to easy and fast replace the rod seal for standard maintenance, nose was designed demountable.

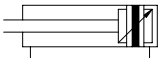

Options

Description	Symbol	Suffix
Through rod	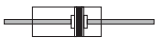	P
FKM seals -20°C ÷ +150°C	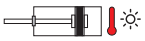	V
FKM rod seal -20°C ÷ +80°C	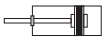	V1
Rod seal scraper in special elastomer for applications in dirty and dusty environment -20°C ÷ +80°C	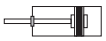	E8
Low temperature seals -40°C ÷ +80°C	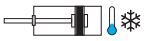	BT
Tandem forward movement piston rods coupled together		TA1
Tandem forward movement piston rods independent		TA2
Tandem back to back	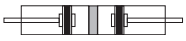	TA3
Tandem front to front		TA4
Extended rod (indicate the requested WH dimension in mm, E.g.: WH=100; for further information please contact the sales department)		WH=..
Without adjustable cushionings	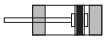	D
Adjustable rear cushioning only	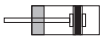	D1
Adjustable front cushioning only	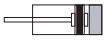	D2
Special male thread (indicate the requested thread. E.g.: R-M 10x1,5; the dimension AM of the special thread will be the same as the standard; cylinder will be supplied without rod nut; for further information please contact the sales department)	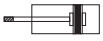	R-M..
Female thread	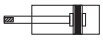	F
With bellow for protection of the rod (in this case the dimension WH should be extended according the stroke of the cylinder; for further information please contact the sales department)	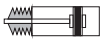	Z
NBR seals -20°C ÷ +80°C	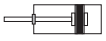	H
NBR rod seal -20°C ÷ +80°C	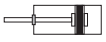	H1
ATEX versions on request		/ATEX
Special versions on request		/S

The options, when this is possible, can be combined with each other. For options matching see from page 5.5.4; For code key see from page 5.5.6.

Options matching

Series	Bore	Model	Standard options matching						
			P	**V**	**V1**	**E8**	**BT**	**TA1**	**TA2**
AMX	Ø 32 ÷ 200	Standard	●	●	●	●	●	●	●
		Through rod (P)		●	●	●	●	-	-
		Female thread (F)	●(4)	●	●	●	●	●	●
		Bellow (Z)	-	●	-	-	●	-	-

Key
● allowed matching; - not allowed matching

Options matching - note

(1) Option **WH=..** require to indicate the desired dimension in mm, whereas for some combinations the option **WH=..** should be required or optional. For further information please contact the sales department. If you choose the female thread (option **F**), please indicate the dimension WF=.. and then the actual desired dimension.

(2) Option **R-M..** require to indicate the desired thread. For further information please contact the sales department.

(3) For some bore and strokes, with bellow option (**Z**) could be necessary the extended rod option (**WH=..**), or the **WH=..** as an option can be different according to customer choiche. For further information please contact the sales department.

(4) With through rod (option **P**) the option female thread (**F**) and the option special male thread (**R-M..**) are applied on both sides of the rod. While the option extended rod (**WH=..**) is applied only to one side at the rod.

Standard options matching

TA3	TA4	WH=..[1]	D	D1	D2	R-M..[2]	F	Z[3]	H	H1	/ATEX
●	●	●	●	●	●	●	●	●	●	●	●
-	-	●[4]	●	●	-	●[4]	●[4]	-	●	●	●
●	-	●	●	●	●	-		●	●	●	●
-	-	●[3]	●	●	●	●	●		●	●	●

Standard materials

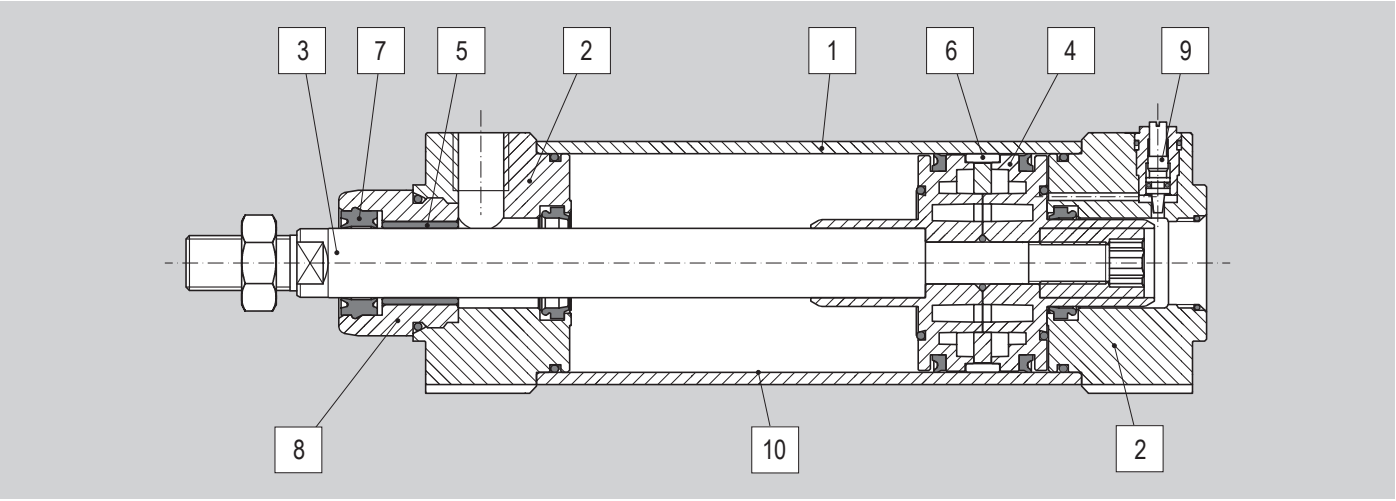

Position	Description	Material	
		Ø 32 ÷ 125	Ø 160 ÷ 200
1	Tube	Stainless Steel AISI 316 L	Stainless Steel AISI 304
2	Heads	Stainless Steel AISI 316 L	
3	Rod	Lapped Stainless Steel AISI 316 L	
4	Piston	Die-cast aluminium	
5	Bushing	Self-lubricating sintered bronze	
6	Guide ring	Natural acetalic resin	
7	Rod seal	Special polyurethane	
8	Disassembling nose	Stainless Steel AISI 316 L	
9	Cushioning screw assembly	Stainless Steel AISI 316 L	
10	Tie-rods	Stainless Steel AISI 316 L	
-	Other seals	NBR / Polyurethane (PU)	

Code key

Bore	/	Stroke	Type	Options	
63	**/**	**100**	**AMX**	**P**	**V**

- **Bore**: Ø 32, 40, 50, 63, 80, 100, 125, 160, 200
- **Stroke**: 10 mm ÷ 2500 mm
- **Type**: AMX — Double acting Magnetic
- **Options**
  - P
  - V
  - V1
  - BT
  - H
  - H1
  - D
  - D1
  - D2

How to order

Bore		Stroke	Type	Options
63	**/**	**100**	**AMX**	**P V**

Notes

For standard materials see the table at page 5.5.5

Options in the same grid are alternative to each others.

For further information on options and their matching, see page 5.5.3 and 5.5.4

For further infomation on the ATEX 2014/34/EU Directive, on classifications and protections, see from page III.1

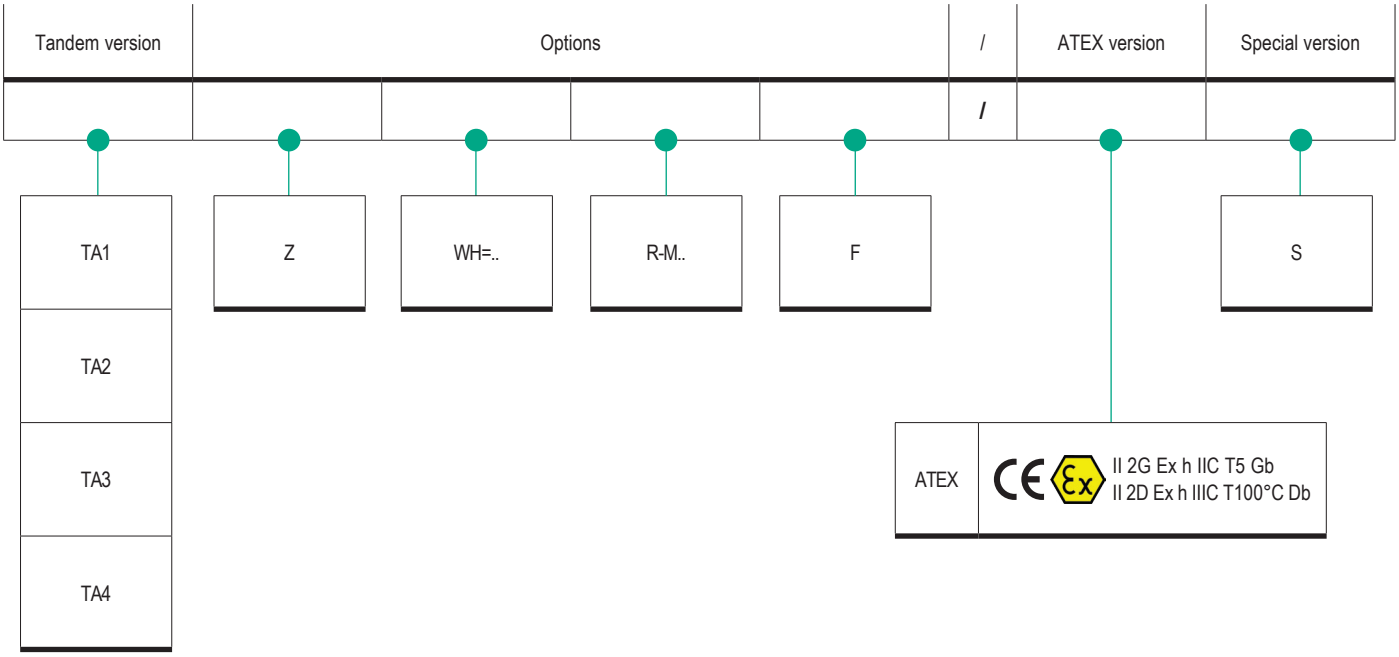

Standard* seal kit

Number of components	Description
n. 1	Rod seal
n. 2	Cushioning seal
n. 2	Piston seal
n. 1	Nose seal
n. 1	Plug seal
n. 1	Linear rubber ring for piston (damper)
n. 2	Tube-head O-ring
n. 1	Piston guiding ring
n. 4	Adjustment screw O-ring
n. 1	Semipiston O-ring

*For cylinders with options P, H, H1, V, V1 and BT, the kit include further components.

Standard seal kit code key

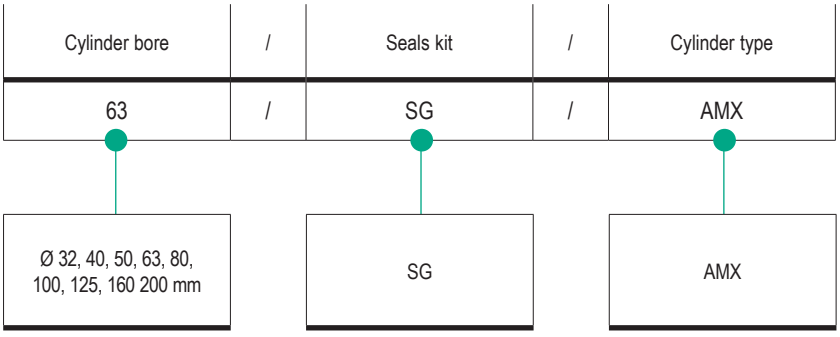

Accessories

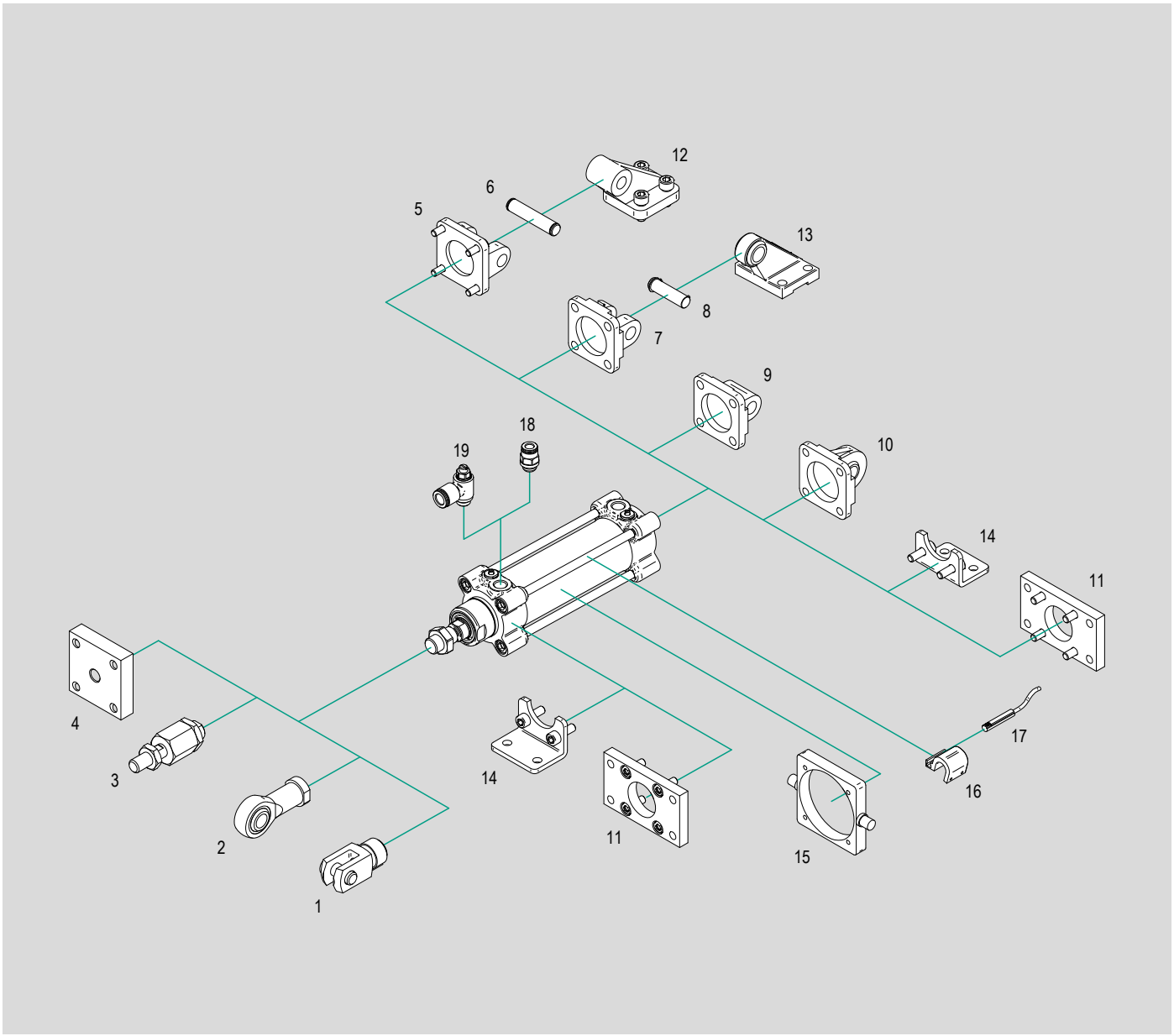

N.	Cylinder bore	Item	Description	Compliance	Matching	Code key page	Data sheet page
					AMX		
1	Ø 32 ÷ 200	FFX..ISO	Stainless Steel ISO female clevis with pin and seeger	ISO 8140	●	5.5.90	5.52.1
2	Ø 32 ÷ 200	RFX..SE	Stainless Steel bearing heads (DIN 648K) with female thread	ISO 8139	●		5.54.1
3	Ø 32 ÷ 125	GBX..	Stainless Steel self-aligning articulated coupling	-	●		5.55.1
4	Ø 32 ÷ 200	GCX..	Stainless Steel self-aligning coupling		●		5.57.1
5	Ø 32 ÷ 200	CFX..AQIS	Stainless Steel rear clevis	ISO MP2	●		5.75.1
6	Ø 32 ÷ 200	SECX..AQIS	Stainless Steel pin with seeger	ISO AA4	●	5.5.91	5.75.5
7	Ø 32 ÷ 125	CFSX..AQIS	Stainless Steel narrow rear clevis (for DIN 648K bearing)	ISO AB6	●	5.5.90	5.75.1
8	Ø 32 ÷ 125	SECX..ARAQIS	Stainless Steel anti-rotating pin with seeger	ISO AA6	●	5.5.91	5.75.5
9	Ø 32 ÷ 200	CMX..AQIS	Stainless Steel rear eye	ISO MP4	●	5.5.90	5.75.2
10	Ø 32 ÷ 125	CMSX..AQIS	Stainless Steel narrow rear eye with DIN 648K bearing	ISO MP6	●		5.75.2
11	Ø 32 ÷ 200	FLVX..AQIS	Stainless Steel flange	ISO VDMA MF1-MF2	●	5.5.91	5.75.4
12	Ø 32 ÷ 125	ASVX..AQIS	Stainless Steel rear 90° hinge	ISO AB7 CETOP RP 107P	●		5.75.3
13	Ø 32 ÷ 125	ASSX..AQIS	Stainless Steel rear 90° hinge with DIN 648K spherical bearing	ISO CS7	●		5.75.3
14	Ø 32 ÷ 200	PBX..	Stainless Steel low foot	ISO MS1	●		5.75.4
15	Ø 32 ÷ 200	CTX..	Stainless Steel center trunnion	-	●		5.75.6
16	Ø 32 ÷ 200	AS..	Bracket for magnetic reed switch T groove		●	5.5.92	1.120.3
			Bracket for high temperature magnetic reed switch				1.120.4
17	Ø 32 ÷ 200	ASV..	Magnetic reed switch T groove		●		1.110.10
		MK..	ATEX magnetic reed switch T groove	2014/34/UE	●		1.113.1
		ASH..	Hi-temperatures magnetic reed switch	-	●		1.111.1
18	Ø 32 ÷ 200	RX	Stainless steel push-in fittings		●	5.302.1	
19	Ø 32 ÷ 200	VX..C	Stainless Steel flow controls, for cylinders		●	5.372.1	

Key
● matching accessory; - not matching accessory

Main features

32 ÷ 200

Bores Ø

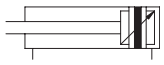

Double acting
Magnetic
With cushionings

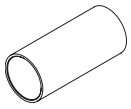

Tube profile

AMX

Type



Technical data

Bore Ø		32	40	50	63	80	100	125	160	200
Fluid		Filtered compressed air with or without lubrication. Lubrication, if started, must be continued.								
Pressure range		0,5 ÷ 10 bar								
Temperature range		-20°C ÷ +80°C (standard / V1 / E8 / H / H1) -20°C ÷ +150°C (V) -40°C ÷ +80°C (BT)								
Strokes		10 ÷ 2500 mm								
Cushion length		20	22	25		35			48	
Ports		1/8"	1/4"		3/8"		1/2"		3/4"	
Rod thread		M10x1,25	M12x1,25	M16x1,5		M20x1,5		M27x2	M36x2	
Weight (g.)	Stroke zero	860	1.350	2.290	2.940	4.960	7.030	12.730	24.780	31.320
	Additional 10 mm	27	35	61	66	106	116	214	331	478

Standard strokes

Stroke mm	**AMX** Bore Ø mm								
	32	40	50	63	80	100	125	160	200
10									
25									
50									
80									
100									
125									
150									
160									
200									
250									
300									
320									
400									
450									
500									

Key
Standard stroke

Standard dimensions

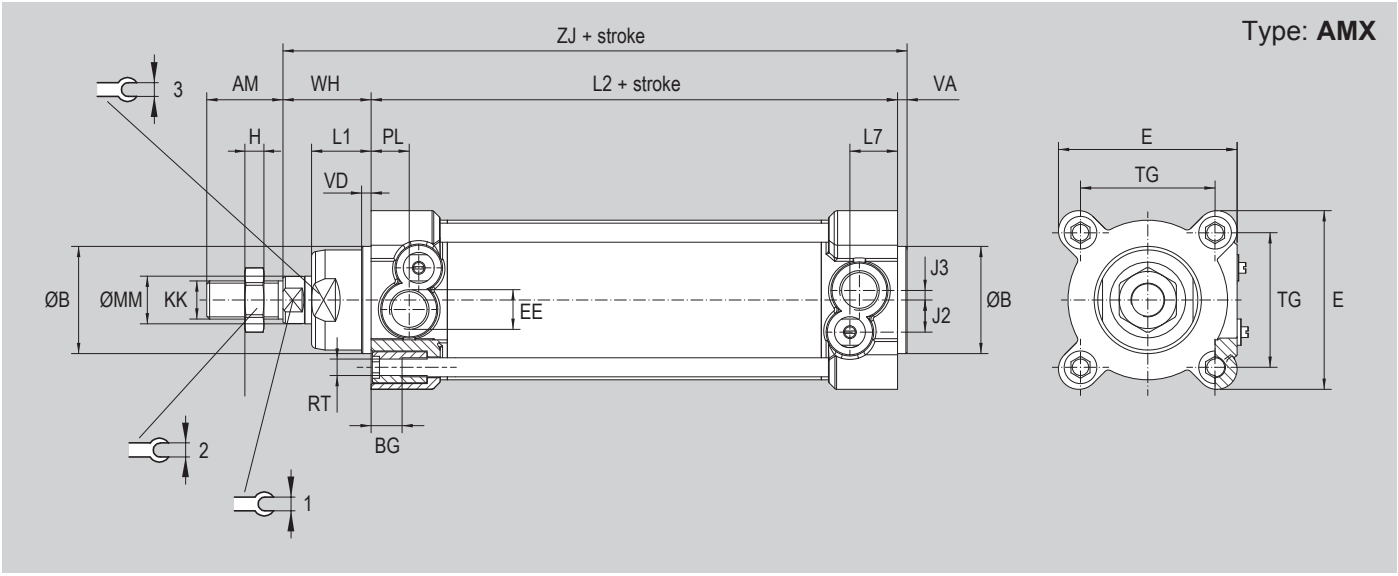

Ø (mm)	AM	B Ø d11	BG	E	EE	J2	J3	KK	L1	L2	H
32	22	30	15	47	G1/8"	6	5	M10x1,25	20	94	8
40	24	35	15	52	G1/4"	7,5	5	M12x1,25	22	105	6
50	32	40	16	65	G1/4"	9,5	7,5	M16x1,5	26	106	8
63	32	45	16	75	G3/8"	13,5	4	M16x1,5	25	121	8
80	40	45	17	95	G3/8"	13,5	6	M20x1,5	32	128	10
100	40	55	17	115	G1/2"	15	6	M20x1,5	38	138	10
125	54	60	21	140	G1/2"	17	8	M27x2	40	160	14
160	72	65	24	180	G3/4"	17	15	M36x2	50	180	14
200	72	75	24	220	G3/4"	17	15	M36x2	65	180	14

Ø (mm)	L7	MM Ø f7	PL	RT	TG	VA	VD	WH	ZJ	1	2	3
32	17,5	12	10	M6	32,5	4	4	26	124	10	17	27
40	21,5	16	15	M6	38	4	4	30	139	13	19	32
50	20	20	15	M8	46,5	4	4	37	147	17	24	36
63	20	20	16	M8	56,5	4	4	37	162	17	24	38
80	27	25	20	M10	72	4	4	46	178	22	30	42
100	28,5	25	23,5	M10	89	4	4	51	193	22	30	50
125	31,5	32	23,5	M12	110	5	5	65	230	27	41	52
160	33	40	27,5	M16	140	6	8	80	266	36	55	60
200	35	40	27	M16	175	6	8	95	281	36	55	70

Dimensions with options

Type: **...P**

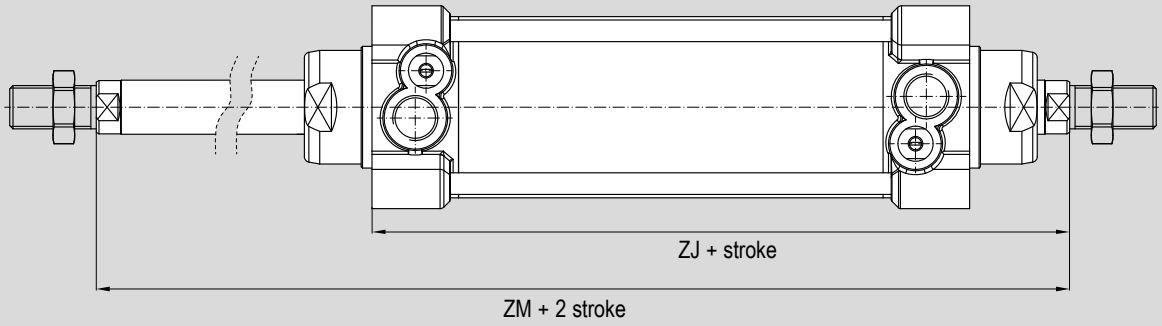

Type: **...F**

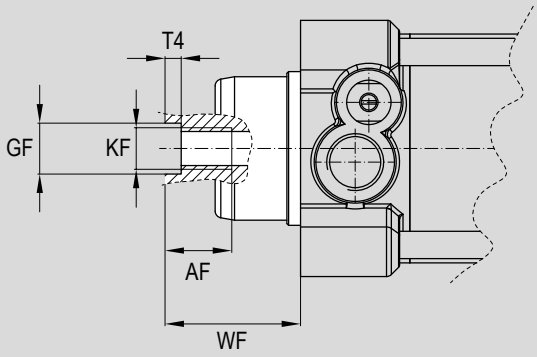

Ø mm	AF	KF	T4	WF	GF	ZJ	ZM
32	12	M6	2,6	26	8	120	146
40	12	M8	3,3	30	10	135	165
50	16	M10	4,7	37	12	143	180
63	16	M10	4,7	37	12	158	195
80	20	M12	6,1	46	14	174	220
100	20	M12	6,1	51	14	189	240
125	32	M16	8	65	18	225	290
160	36	M20	10	80	22	260	340
200	36	M20	10	95	22	275	370

Dimensions tandem versions

Type: **...TA1**

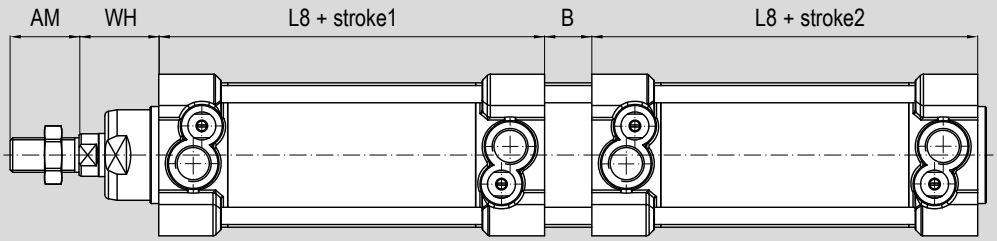

Type: **...TA2**

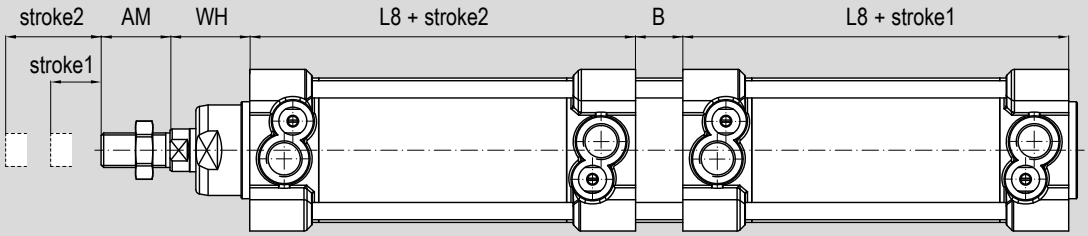

Type: **...TA3**

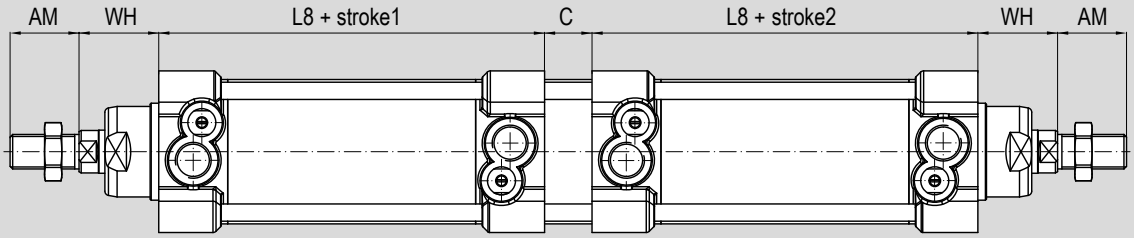

Type: **...TA4**

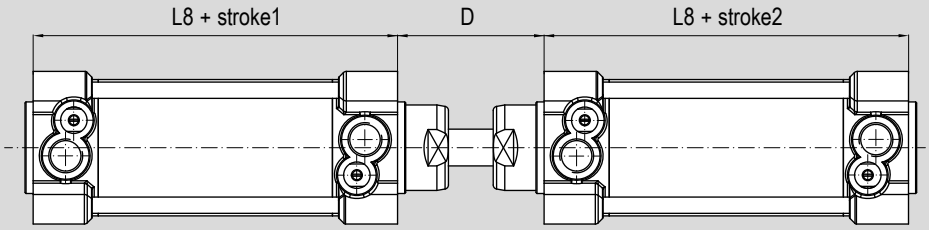

Ø mm	AM	B	C	D	L8	WH
32	22	40	12	48	94	26
40	24	44	12	54	105	30
50	32	52	16	69	106	37
63	32	50	16	69	121	37
80	40	64	20	86	128	46
100	40	76	20	91	138	51
125	54	80	35	120	160	65
160	72	100	50	152	180	80
200	72	130	50	167	180	95

Stainless Steel female clevis with pin and seeger FFX..ISO



For cylinder Ø mm	Code	Item	Compliance
32	041055	FFX10ISO	ISO 8140
40	041056	FFX12ISO	
50-63	041057	FFX16ISO	
80-100	041058	FFX20ISO	
125	041112	FFX27ISO	
160-200	041113	FFX36ISO	

Stainless Steel bearing heads (DIN 648K) RFX..SE



For cylinder Ø mm	Code	Item	Compliance
32	040009	RFX10SE	ISO 8139
40	041578	RFX12SE	
50-63	040011	RFX16SE	
80-100	041579	RFX20SE	
125	041580	RFX30SE	
160-200	041581	RFX35SE	

Stainless Steel self-aligning articulated coupling GBX..



For cylinder Ø mm	Code	Item	Compliance
32	041737	GBX040	-
40	041738	GBX060	
50-63	041739	GBX100	
80-100	041721	GBX120	
125	041740	GBX130	

Stainless Steel self-aligning coupling GCX..

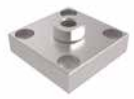

For cylinder Ø mm	Code	Item	Compliance
32	041728	GCXM10x1,25	-
40	041729	GCXM12x1,25	
50-63	041730	GCXM16x1,5	
80-100	041731	GCXM20x1,5	
125	041732	GCXM27x2	
160-200	041733	GCXM36x2	

Stainless Steel rear clevis CFX..AQIS



For cylinder Ø mm	Code	Item	Compliance
32	040012	CFX032AQIS	ISO MP2
40	040830	CFX040AQIS	
50	040801	CFX050AQIS	
63	040014	CFX063AQIS	
80	040013	CFX080AQIS	
100	040838	CFX100AQIS	
125	040005	CFX125AQIS	
160	040797	CFX160AQIS	
200	040798	CFX200AQIS	

Stainless Steel pin type SECX..AQIS to be ordered separately, see page 5.5.91

Stainless Steel rear eye CMX..AQIS



For cylinder Ø mm	Code	Item	Compliance
32	040805	CMX032AQIS	ISO MP4
40	040806	CMX040AQIS	
50	040802	CMX050AQIS	
63	040808	CMX063AQIS	
80	040016	CMX080AQIS	
100	040799	CMX100AQIS	
125	040008	CMX125AQIS	
160	040800	CMX160AQIS	
200	040804	CMX200AQIS	

Stainless Steel narrow rear clevis (for DIN 648K bearing) CFSX..AQIS



For cylinder Ø mm	Code	Item	Compliance
32	040821	CFSX032AQIS	ISO AB6
40	040822	CFSX040AQIS	
50	040823	CFSX050AQIS	
63	040824	CFSX063AQIS	
80	040825	CFSX080AQIS	
100	040826	CFSX100AQIS	
125	040833	CFSX125AQIS	

Stainless Steel pin type SECX..ARAQIS to be ordered separately, see page 5.5.91

Stainless Steel narrow rear eye with DIN 648K bearing CMSX..AQIS



For cylinder Ø mm	Code	Item	Compliance
32	040834	CMSX032AQIS	ISO MP6
40	040835	CMSX040AQIS	
50	040836	CMSX050AQIS	
63	040010	CMSX063AQIS	
80	040837	CMSX080AQIS	
100	040848	CMSX100AQIS	
125	040849	CMSX125AQIS	

Stainless Steel rear 90° hinge ASVX..AQIS



For cylinder Ø mm	Code	Item	Compliance
32	040809	ASVX032AQIS	ISO AB7 cetop RP 107P
40	040810	ASVX040AQIS	
50	040812	ASVX050AQIS	
63	040813	ASVX063AQIS	
80	040814	ASVX080AQIS	
100	040815	ASVX100AQIS	
125	040816	ASVX125AQIS	

Stainless Steel rear 90°hinge with DIN 648K spherical bearing ASSX..AQIS



For cylinder Ø mm	Code	Item	Compliance
32	040850	ASSX032AQIS	ISO CS7
40	040851	ASSX040AQIS	
50	040852	ASSX050AQIS	
63	040853	ASSX063AQIS	
80	040854	ASSX080AQIS	
100	040855	ASSX100AQIS	
125	040856	ASSX125AQIS	

Stainless Steel low foot* PBX..AQIS



For cylinder Ø mm	Code	Item	Compliance
32	040872	PBX032AQIS	ISO MS1
40	040873	PBX040AQIS	
50	040874	PBX050AQIS	
63	040875	PBX063AQIS	
80	040876	PBX080AQIS	
100	040877	PBX100AQIS	
125	040878	PBX125AQIS	
160	040879	PBX160AQIS	
200	040880	PBX200AQIS	

*Supplied individually

Stainless Steel flange FLVX..AQIS



For cylinder Ø mm	Code	Item	Compliance
32	040864	FLVX032AQIS	ISO VDMA MF1 / MF2
40	040865	FLVX040AQIS	
50	040840	FLVX050AQIS	
63	040866	FLVX063AQIS	
80	040867	FLVX080AQIS	
100	040868	FLVX100AQIS	
125	040869	FLVX125AQIS	
160	040870	FLVX160AQIS	
200	040871	FLVX200AQIS	

Stainless Steel flat head allen screw type VBTRX to be ordered separately, see page 5.79.1

Stainless Steel adjustable center trunnion CTX..AQIS



For cylinder Ø mm	Code	Item	Compliance
32	040881	CTX032AQIS	ISO MT4
40	040882	CTX040AQIS	
50	040883	CTX050AQIS	
63	040884	CTX063AQIS	
80	040885	CTX080AQIS	
100	040550	CTX100AQIS	
125	040886	CTX125AQIS	
160	040887	CTX160AQIS	
200	040888	CTX200AQIS	

*For trunnion mounted on the cylinder, please order togheter with the cylinder.
Grains to be ordered separately, see page 5.79.1

Stainless Steel pin with seeger* SECX..AQIS



For cylinder Ø mm	Code	Item	Compliance
32	040829	SECX032AQIS	ISO AA4
40	040831	SECX040AQIS	
50	040811	SECX050AQIS	
63	040832	SECX063AQIS	
80	040015	SECX080AQIS	
100	040839	SECX100AQIS	
125	040818	SECX125AQIS	
160	040819	SECX160AQIS	
200	040820	SECX200AQIS	

*Supplied with 2 seeger

Stainless Steel anti-rotating pin with seeger* SECX..ARAQIS



For cylinder Ø mm	Code	Item	Compliance
32	040857	SECX032ARAQIS	ISO AA6
40	040858	SECX040ARAQIS	
50	040859	SECX050ARAQIS	
63	040860	SECX063ARAQIS	
80	040861	SECX080ARAQIS	
100	040862	SECX100ARAQIS	
125	040863	SECX200ARAQIS	

*Supplied with 1 seeger

Bracket AS.. for magnetic reed switches T groove



For cylinder Ø mm	Code	Item	Cylinder matching
32 ÷ 40	072912	AS105	AMX
50 ÷ 100	072913	AS106	
125	072909	AS102	
160 ÷ 200	072910	AS103	

Bracket AS.. for high-temperatures magnetic reed switches



For cylinder Ø mm	Code	Item	Cylinder matching
32 ÷ 40	074041	AS117	AMX
50 ÷ 63	074043	AS118	
80 ÷ 100	074087	AS119	
125	074155	AS120	
160 ÷ 200	074169	AS121	

Magnetic reed switch T groove ASV..



For cylinder Ø mm	Code	Item	Cylinder matching
32 ÷ 200	070946	ASV1C525	AMX*
	071863	ASV1C550	
	071864	ASV1C51K	
	071189	ASV1C5M8	
	073639	ASV4D225	
	070246	ASV4D2M8	
	074900	ASV7N225	
	070247	ASV7N2M8	
	070372	ASV7M2M8	
	072918	ASV1H525	

*With bracket type AS.. for magnetic reed switches T groove

ATEX magnetic reed switch T groove MK..



For cylinder Ø mm	Code	Item	Compliance	Cylinder matching
32 ÷ 200	071120	MK500A	Ex 3D	AMX*
	071108	MK502A	Ex II1G	

*With bracket type AS.. for magnetic reed switches T groove

High-temperatures magnetic reed switches ASH..



For cylinder Ø mm	Code	Item	Cylinder matching
32 ÷ 200	074047	ASH6C550	AMX*

*With bracket type AS.. for high-temperatures magnetic reed switches

STAINLESS STEEL

round cylinders Series RXD



Find out our
key products

- **Solution for most applications**
- **Easy and intuitive choice**
- **Excellent value for money**
- **Wide availability**
- **Fast delivery**

Main features and certifications

Series of Stainless Steel AISI 316L Round Cylinders in bores from Ø 32 to 63, double acting, magnetic with adjustable cushionings. Supplied as standard in compliance to Reach and RoHS directives, and SIL certified. Lubrication with synthetic grease long lasting, for applications with low start up, granting low friction and a permanent lubrication film. Fully composed by non-toxic elements conforming to FDA Directive section 21 CFR 178 about accidental contact with food (registered NSF H1). On request, can be also supplied according to the 2014/34/EU ATEX Directive.

Series RXD Ø 32 ÷ 63

from page 5.11.10



Stainless Steel AISI 316L Round Cylinders, available in bores from Ø 32 to 63, double acting magnetic with adjustable cushioning, characterized by an essential design to prevent the accumulation of impurities. The cylinder body surface is smooth with no chamfers or cavities where dirt could settle. The rod seal is in special polyurethane developed for chemical and food&beverage. These features make these cylinders particularly suitable for the food&beverage, chemical, pharmaceutical and medical fields, and in general for all applications where maximum hygiene and cleaning are required, even in corrosive environments. Various configurations are possible, some of which make the cylinder with ISO dimensions.

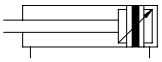

Options

Description	Symbol	Suffix
Through rod	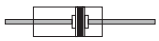	**P**
FKM seals -20°C ÷ +150°C	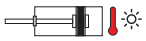	**V**
FKM rod seal -20°C ÷ +80°C	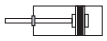	**V1**
Rod seal scraper in special elastomer for applications in dirty and dusty environment -20°C ÷ +80°C	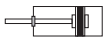	**E8**
Low temperature seals -40°C ÷ +80°C	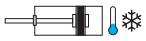	**BT**
Extended rod (indicate the requested WH dimension in mm, E.g.: WH=100; for further information please contact the sales department)		**WH=..**
Without adjustable cushionings	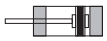	**D**
Adjustable rear cushioning only	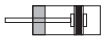	**D1**
Adjustable front cushioning only	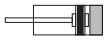	**D2**
Special male thread (indicate the requested thread. E.g.: R-M 10x1,5; the dimension AM of the special thread will be the same as the standard; cylinder will be supplied without rod nut; for further information please contact the sales department)	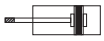	**R-M..**
NBR rod seal -20°C ÷ +80°C	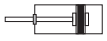	**H1**
ATEX versions on request		**/ATEX**
Special versions on request		**/S**

The options, when this is possible, can be combined with each other. For options matching see from page 5.11.4; For code key see from page 5.11.6.

Options matching

Series	Bore	Type	Standard options matching				
			P	**V**	**V1**	**E8**	**BT**
RXD	Ø 32 ÷ 63	with front threaded end cap (VA)	●	●	●	●	●
		with front and rear threaded end caps (VD)	-	●	●	●	●
		with 4 female threaded holes on rear end cap (FP)	-	●	●	●	●
		with ISO MP4 rear eye (CM)	-	●	●	●	●
		with ISO MP6 narrow rear eye (CS)	-	●	●	●	●
		with ISO AB6 narrow rear clevis (CF)	-	●	●	●	●
		with pins on front end cap (BA)	-	●	●	●	●
		with pins on rear end cap (BP)	-	●	●	●	●

Key
● matching accessory; - not matching accessory

Options matching - note

(1) Option **WH=..** require to indicate the desired dimension in mm; for models with through rod option (**P**) the extended rod option (**WH=..**) is applied only to one side of the rod. For further information please contact the sales department.

(2) Option **R-M..** require to indicate the desired thread; for models with through rod option (**P**) the special male thread option (**R-M..**) are applied on both sides of the rod. For further information please contact the sales department.

Standard options matching						
WH=..[1]	**D**	**D1**	**D2**	**R-M..**[2]	**H1**	**/ATEX**
•	•	•	•	•	•	•
•	•	•	•	•	•	•
•	•	•	•	•	•	•
•	•	•	•	•	•	•
•	•	•	•	•	•	•
•	•	•	•	•	•	•
•	•	•	•	•	•	•
•	•	•	•	•	•	•

Code key

Bore	/	Stroke	Series	Type
40	**/**	**80**	**RXD**	**VA**

- **40**: Ø 32, 40, 50, 63
- **80**: 10 mm ÷ 1000 mm
- **RXD**: RXD Double acting Magnetic With adjustable cushionings
- **VA**:

Suffix		testata anteriore	testata posteriore
VA Front threaded end cap			
VD Front and rear threaded end caps			
FP Four female threaded holes on rear end cap			
CM Rear eye	ISO MP4		
CS Narrow rear eye	ISO MP6		
CF Narrow rear clevis	ISO AB6		
BA Pins on front end cap			
BP Pins on rear end cap			

How to order

Bore		Stroke	Series	Type	Options
40	**/**	**80**	**RXD**	**VA**	**P V**

Notes

For standard materials see the side table. Options in the same grid are alternative to each others.

For further information on options and their matching, see page 5.11.3 and 5.11.4

For further infomation on the ATEX 2014/34/EU Directive, on classifications and protections, see from page III.1

(1) Available for type RXDVA only

Standard* seal kit

Number of components	Description
n. 1	Rod seal
n. 2	Cushioning seal
n. 2	Piston seal
n. 1	Nose seal
n. 2	Linear rubber ring for piston (damper)
n. 2	Tube O-ring
n. 1	Piston guiding ring
n. 4	Adjustment screw O-ring
n. 1	Semipiston O-ring

*For cylinders with options P, H1, V, V1 and BT, the kit include further components.

Standard seal kit code key

Cylinder bore	/	Seals kit	/	Cylinder series
63	/	SG	/	RXD

- 63: Ø 32, 40, 50, 63 mm
- SG: SG
- RXD: RXD

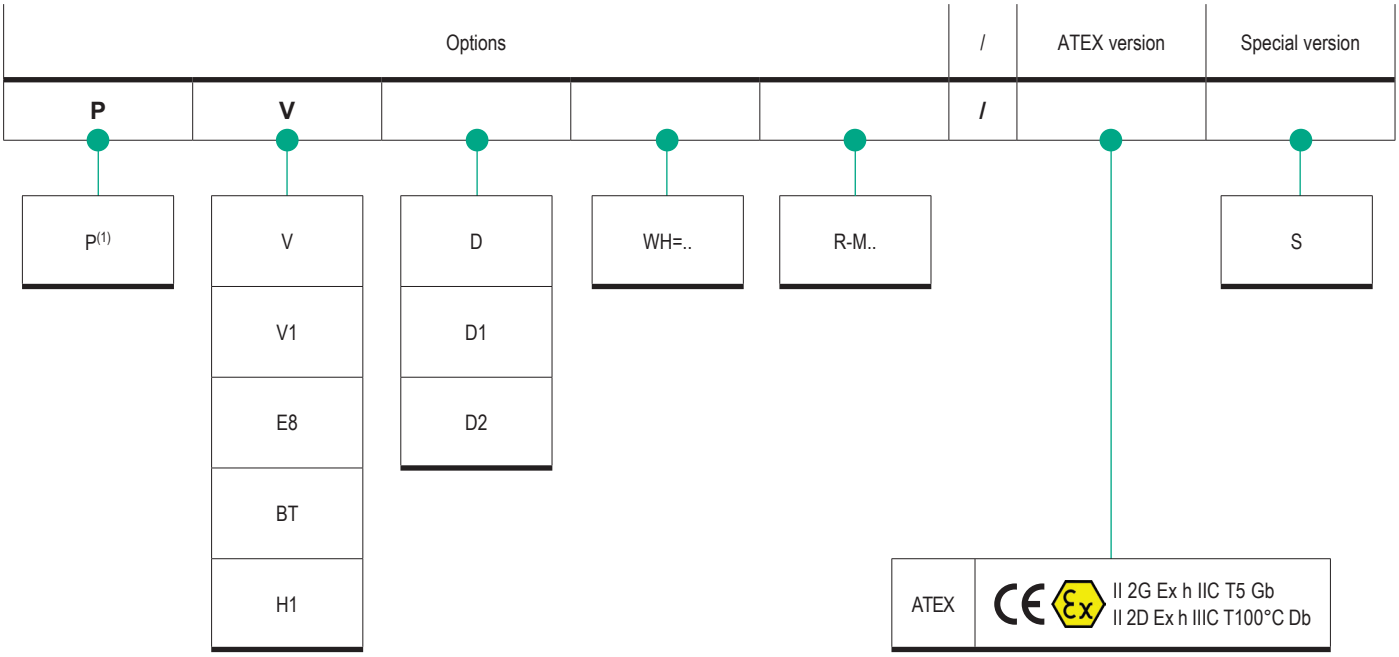

Standard materials

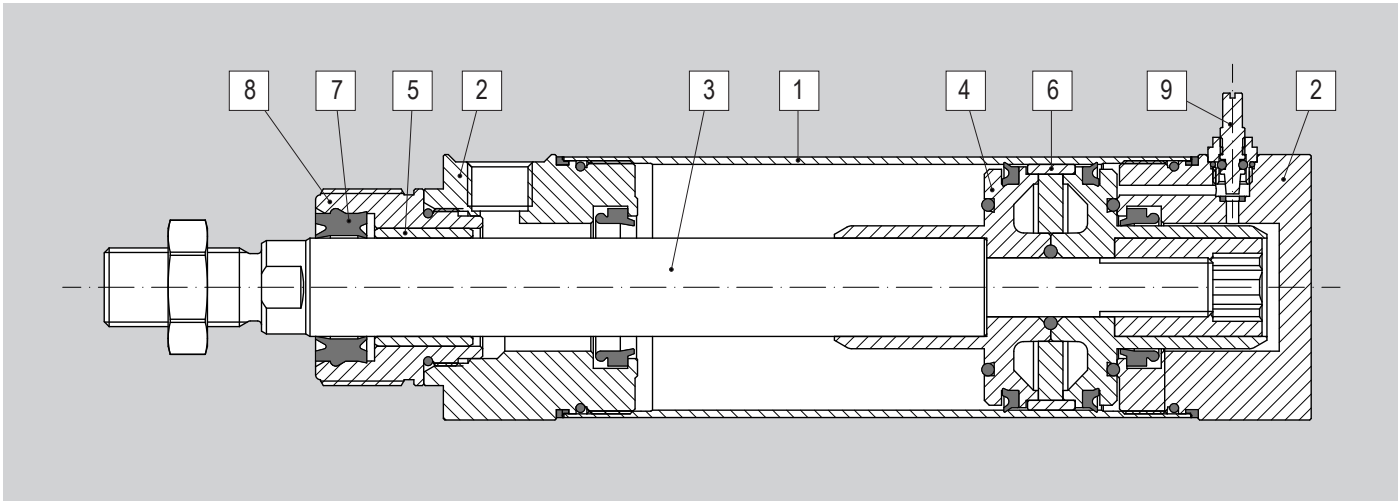

Position	Description	Material
1	Tube	Stainless Steel AISI 316 L
2	Heads	Stainless Steel AISI 316 L
3	Rod	Stainless Steel AISI 316 L lapped
4	Piston	Die-cast aluminium
5	Bushing	Self-lubricated sintered bronze
6	Guide ring	Natural acetalic resin
7	Rod seal	Special polyurethane
8	Disassembling nose	Stainless Steel AISI 316 L
9	Cushioning screw assembly	Stainless Steel AISI 316 L
-	Other seals	NBR / Polyurethane (PU)

Accessories

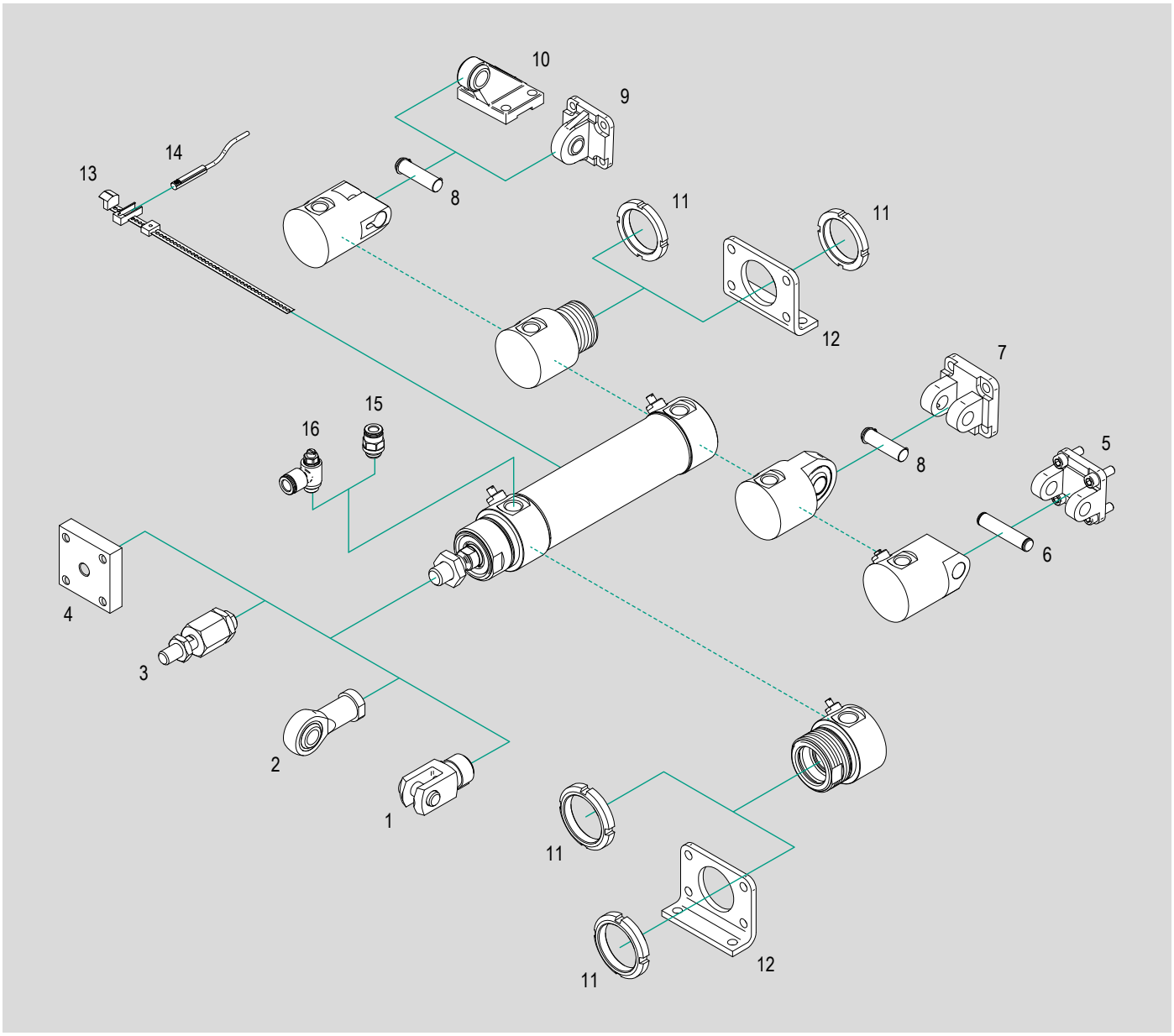

N.	Cylinder bore	Item	Description	Compliance	Cylinde type matching								Code key page	Data sheet page
					VA	VD	FP	CM	CS	CF	BA	BP		
1	Ø 32 ÷ 63	FFX..ISO	Stainless Steel ISO female clevis with pin and seeger	ISO 8140	●	●	●	●	●	●	●	●		5.52.1
2	Ø 32 ÷ 63	RFX..SE	Stainless Steel bearing heads (DIN 648K) with female thread	ISO 8139	●	●	●	●	●	●	●	●		5.54.1
3	Ø 32 ÷ 63	GBX..	Stainless Steel self-aligning articulated coupling	-	●	●	●	●	●	●	●	●	5.11.90	5.55.1
4	Ø 32 ÷ 63	GCX..	Stainless Steel self-aligning coupling		●	●	●	●	●	●	●	●		5.57.1
5	Ø 32 ÷ 63	CFX..AQIS	Stainless Steel rear clevis	ISO MP2	-	-	-	●	-	-	-	-		5.73.50
6	Ø 32 ÷ 63	SECX..AQIS	Stainless Steel pin with seeger	AA4	-	-	-	●	-	-	-	-	5.11.91	5.75.5
7	Ø 32 ÷ 63	CFSX..AQIS	Stainless Steel narrow rear clevis (for DIN 648K bearing)	ISO AB6	-	-	-	-	●	-	-	-	5.11.90	5.73.50
8	Ø 32 ÷ 63	SECX..ARAQIS	Stainless Steel anti-rotating pin with seeger	AA6	-	-	-	-	●	●	-	-	5.11.91	5.75.5
9	Ø 32 ÷ 63	CMSX..AQIS	Stainless Steel narrow rear eye with DIN 648K bearing	ISO MP6	-	-	-	-	-	●	-	-	5.11.90	5.73.51
10	Ø 32 ÷ 63	ASSX..AQIS	Stainless Steel rear 90° hinge with DIN 648K spherical bearing	ISO CS7	-	-	-	-	-	●	-	-		5.73.51
11	Ø 32 ÷ 63	GHX..AQM	Stainless Steel head nut	-	●[1]	●	-	-	-	-	-	-	5.11.91	5.73.52
12	Ø 32 ÷ 63	PX..AQM	Stainless Steel foot-flange		●	●	-	-	-	-	-	-		5.73.52
13	Ø 32 ÷ 63	AFR..	Bracket for magnetic reed switch T groove		●	●	●	●	●	●	●	●		1.120.3
14	Ø 32 ÷ 63	ASV..	Magnetic reed switch T groove		●	●	●	●	●	●	●	●		1.110.10
		MK..	ATEX magnetic reed switch T groove	2014/34/UE	●	●	●	●	●	●	●	●		1.113.1
15	Ø 32 ÷ 63	RX	Stainless steel push-in fittings	-	●	●	●	●	●	●	●	●	5.302.1	
16	Ø 32 ÷ 63	VX..C	Stainless Steel flow controls, for cylinders		●	●	●	●	●	●	●	●	5.372.1	

Key
● matching accessory; - not matching accessory

(1) For front end cap only

Main features

32 ÷ 63

Bores Ø

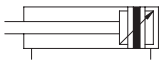

Double acting
Magnetic
With cushionings

RXD

Series



Technical data

Bore Ø	32	40	50	63
Fluid	Filtered compressed air with or without lubrication. Lubrication, if started, must be continued.			
Pressure range	1 ÷ 10 bar			
Temperature range	-20°C ÷ +80°C (standard / V1 / E8 / H1) -20°C ÷ +150°C (V) -40°C ÷ +80°C (BT)			
Strokes	10 ÷ 1000 mm			
Cushion length	20 mm	22 mm	25 mm	
Ports	1/8"	1/4"		3/8"
Rod thread	M10x1,25	M12x1,25	M16x1,5	

Notes

For dimensions and specific features of each type, see the following pages.

For standard materials see page 5.10.7

Standard strokes

	RXD Bore Ø mm			
Stroke mm	32	40	50	63
25				
50				
80				
100				
125				
160				
200				
250				
320				
400				
500				

Key

Standard stroke

Round cylinders series RXD

Type			Compliance	Front end cap	Rear end cap	Data sheet page
RXDVA	Round cylinder with threaded front end cap and flat rear end cap		-		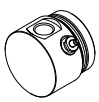	5.11.12
RXDVD	Round cylinder with threaded front and rear end caps		-			5.11.14
RXDFP	Round cylinder with demountable nose on front end cap and flat rear end cap with four female threads		-		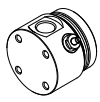	5.11.15
RXDCM	Round cylinder with demountable nose on front end cap, and rear eye integrated in the rear end cap		ISO MP4		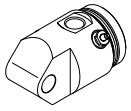	5.11.16
RXDCS	Round cylinder with demountable nose on front end cap, and narrow rear eye integrated in the rear end cap		ISO MP6			5.11.17
RXDCF	Round cylinder with demountable nose on front end cap, and narrow rear clevis integrated in the rear end cap		ISO AB6		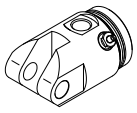	5.11.18
RXDBA	Round cylinder with demountable nose on front end cap with integrated pins, and flat rear end cap		-		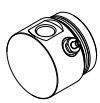	5.11.19
RXDBP	Round cylinder with demountable nose on front end cap, and flat rear end cap with integrated pins		-			5.11.20

Version

32 ÷ 63

Bores Ø

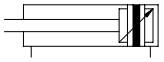

Double acting
Magnetic
With cushionings



Threaded front end cap



Flat rear end cap

RXDVA

Type



Peculiar characteristics

The assembly is through the threaded front end cap. The rear end cap is flat, the cylinder body is with no chamfers or cavities where dirt can settle. For the same reason, the adjusting cushioning screws are not recessed but protruding the body of the cylinder.
On this type through rod option (P) is available. For dimensions see page 5.11.10
Stainless steel head nut type GHX..AQM (see page 5.11.91) is compatible with front end cap.

Standard dimensions

Type: **RXDVA**

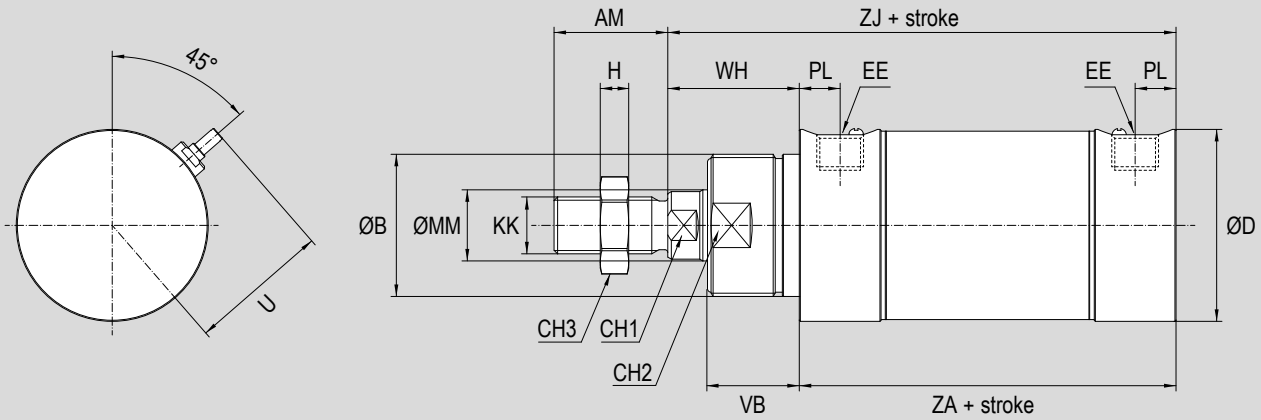

Ø (mm)	AM	ØB	ØD	EE	KK	ØMM f7	PL	VB	U	WH	ZA +1 0	ZJ +1 0	CH1	CH2	CH3	H
32	22	M30x1,5	36	G1/8"	M10x1,25	12	10,5	20	26,5	26	94	120	10	29	17	5
40	24	M38x1,5	45	G1/4"	M12x1,25	16	12	22	31	30	105	135	13	36	19	6
50	32	M45x1,5	54	G1/4"	M16x1,5	20	11,5	26	39,5	37	106	143	17	42	24	8
63	32	M45x1,5	68	G3/8"	M16x1,5	20	14,5	25	38,5	37	121	158	17	42	24	8

Dimensions with option

Type: **..P**

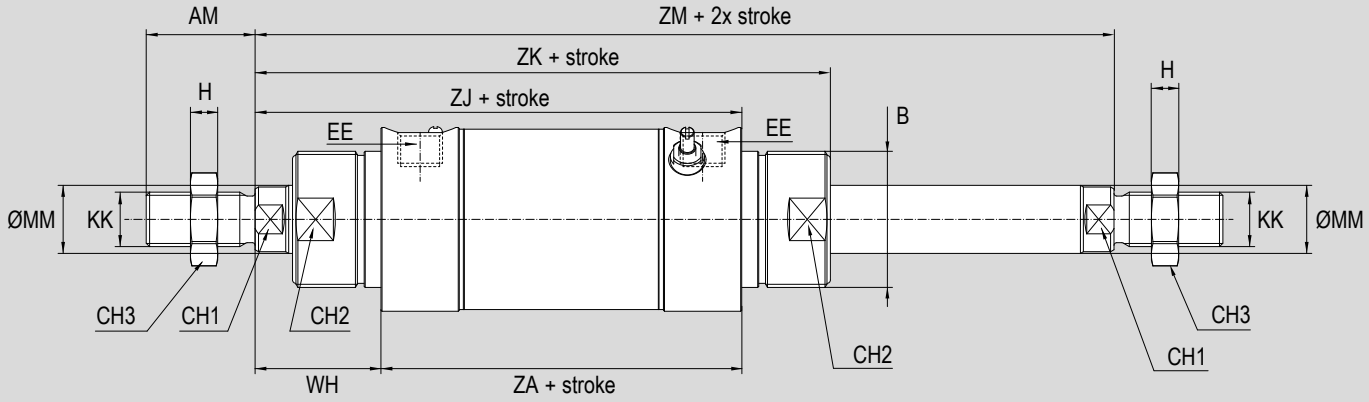

Ø (mm)	AM	B	ØMM f7	WH	ZA +1 0	ZJ +1 0	ZK +1 0	ZM +1 0	KK	EE	CH1	CH2	CH3	H
32	22	M30x1,5	12	26	94	120	140	146	M10x1,25	G1/8"	10	29	17	5
40	24	M38x1,5	16	30	105	135	157	165	M12x1,25	G1/4"	13	36	19	6
50	32	M45x1,5	20	37	106	143	169	180	M16x1,5	G1/4"	17	42	24	8
63	32	M45x1,5	20	37	121	158	183	195	M16x1,5	G3/8"	17	42	24	8

Version

32 ÷ 63	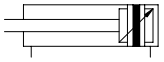			**RXDVD**
Bores Ø	Double acting Magnetic With cushionings	Threaded front end cap	Threaded rear end cap	Type



Peculiar characteristics

The front and the rear end caps are both threaded for the assembly.
The cylinder body is with no chamfers or cavities where dirt can settle. For the same reason, the adjusting cushioning screws are not recessed but protruding the body of the cylinder.
Stainless steel head nut type GHX..AQM (see page 5.11.91) is compatible with front and rear end caps.

Standard dimensions

Type: **RXDVD**

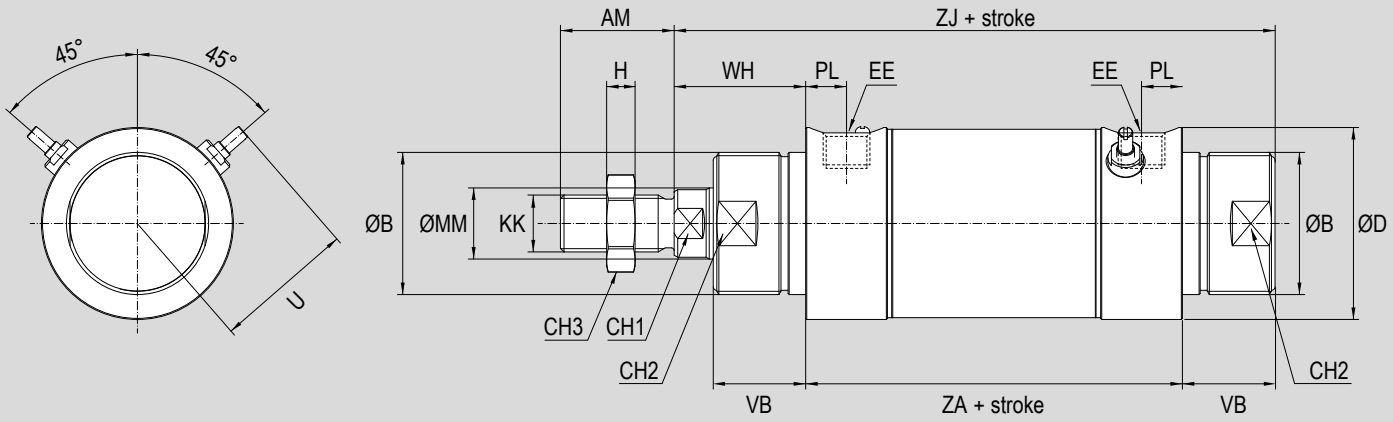

Ø (mm)	AM	ØB	ØD	EE	KK	ØMM f7	PL	VB	U	WH	ZA +1 0	ZJ +1 0	CH1	CH2	CH3	H
32	22	M30x1,5	36	G1/8"	M10x1,25	12	10,5	20	26,5	26	94	140	10	29	17	5
40	24	M38x1,5	45	G1/4"	M12x1,25	16	12	22	31	30	105	157	13	36	19	6
50	32	M45x1,5	54	G1/4"	M16x1,5	20	11,5	26	39,5	37	106	169	17	42	24	8
63	32	M45x1,5	68	G3/8"	M16x1,5	20	14,5	25	38,5	37	121	183	17	42	24	8

Version

32 ÷ 63	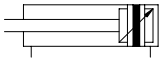			**RXDFP**
Bores Ø	Double acting Magnetic With cushionings	Front end cap with demountable nose	Flat rear end cap with threaded holes	Type



Peculiar characteristics

The front end cap is clean design, with no cavities and demountable nose, allowing maintenance directly on the machine where cylinder is assembled, thus reducing maintenance time. The rear end cap is flat with four female threaded holes.
The cylinder body is with no chamfers or cavities where dirt can settle. For the same reason, the adjusting cushioning screws are not recessed but protruding the body of the cylinder.

Standard dimensions

Type: **RXDFP**

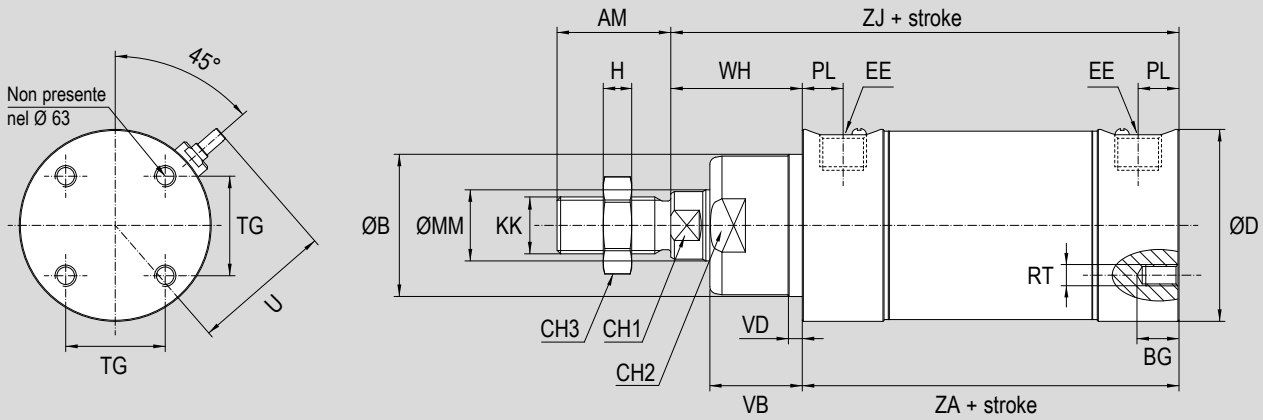

Ø (mm)	AM	ØB d11	BG	ØD	EE	KK	ØMM f7	PL	RT	TG	VB
32	22	30	6	36	G1/8"	M10x1,25	12	10,5	M4	19	20
40	24	35	8	45	G1/4"	M12x1,25	16	12	M5	24	22
50	32	40	9	54	G1/4"	M16x1,5	20	11,5	M6	28	26
63	32	45	12	68	G3/8"	M16x1,5	20	14,5	M8	35	25

Ø (mm)	VD	U	WH	ZA +1 0	ZJ +1 0	CH1	CH2	CH3	H
32	4	26,5	26	94	120	10	29	17	5
40	4	31	30	105	135	13	33	19	6
50	4	39,5	37	106	143	17	38	24	8
63	4	38,5	37	121	158	17	42	24	8

Version

32 ÷ 63	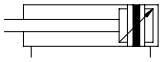			**RXDCM**
Bores Ø	Double acting Magnetic With cushionings	Front end cap with demountable nose	Rear end cap with rear eye ISO MP4	Type



Peculiar characteristics

The front end cap is clean design, with no cavities and demountable nose, allowing maintenance directly on the machine where cylinder is assembled, thus reducing maintenance time. A rear eye conforming to ISO MP4 standards is integrated in the rear end cap, this way the dimensions of the cylinder are compliant with ISO 15552 standards. The stainless steel rear female clevis ISO MP2 type CFX..AQIS (see page 5.11.50) can be mounted to the integrated rear eye with the stainless steel pin type SECX..AQIS.
The cylinder body is with no chamfers or cavities where dirt can settle. For the same reason, the adjusting cushioning screws are not recessed but protruding the body of the cylinder.

Standard dimensions

Type: **RXDCM**

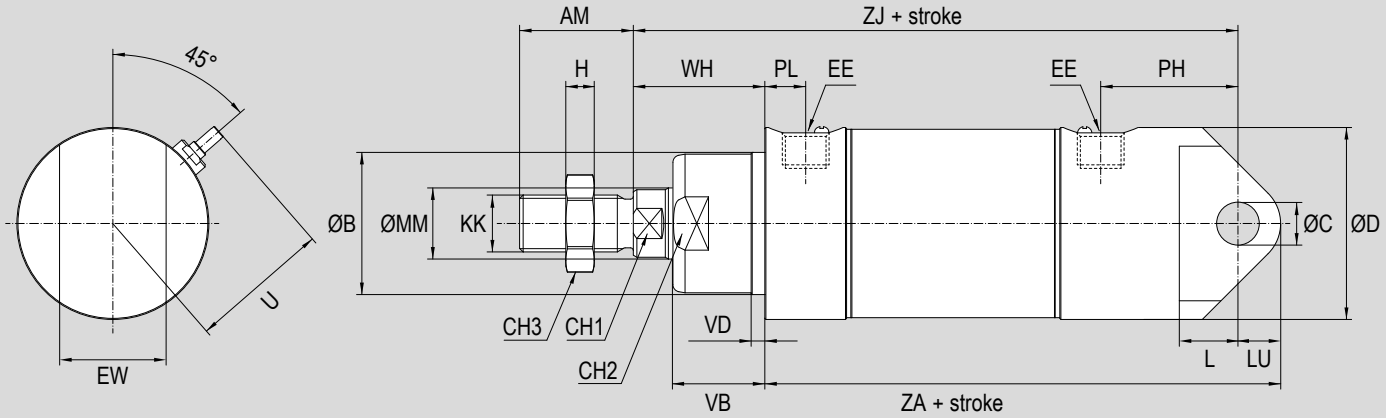

Ø (mm)	AM	ØB d11	ØC H8	ØD	EE	EW	KK	ØMM f7	L	LU	PH
32	22	30	10	36	G1/8"	26	M10x1,25	12	13	9	32,5
40	24	35	12	45	G1/4"	28	M12x1,25	16	16	10	37
50	32	40	12	54	G1/4"	32	M16x1,5	20	16,5	12	37
63	32	45	16	68	G3/8"	40	M16x1,5	20	21	12	46

Ø (mm)	PL	VB	VD	U	WH	ZA +1 0	ZJ +1 0	CH1	CH2	CH3	H
32	10,5	20	4	26,5	26	125	142	10	29	17	5
40	12	22	4	31	30	140	160	13	33	19	6
50	11,5	26	4	39,5	37	145	170	17	38	24	8
63	14,5	25	4	38,5	37	165	190	17	42	24	8

Version

32 ÷ 63				**RXDCS**
Bores Ø	Double acting Magnetic With cushionings	Front end cap with demountable nose	Rear end cap with narrow rear eye ISO MP6	Type



Peculiar characteristics

The front end cap is clean design, with no cavities and demountable nose, allowing maintenance directly on the machine where cylinder is assembled, thus reducing maintenance time. A narrow rear eye with DIN 648K spherical bearing according to ISO MP6 standards is integrated in the rear end cap, this way the dimensions of the cylinder are compliant with ISO 15552 standards. The stainless steel narrow rear clevis ISO AB6 type CFSX..AQIS (see page 5.11.50) can be mounted to the integrated narrow rear eye with the stainless steel anti-rotating pin type SECX..ARAQIS.
The cylinder body is with no chamfers or cavities where dirt can settle. For the same reason, the adjusting cushioning screws are not recessed but protruding the body of the cylinder.

Standard dimensions

Type: **RXDCS**

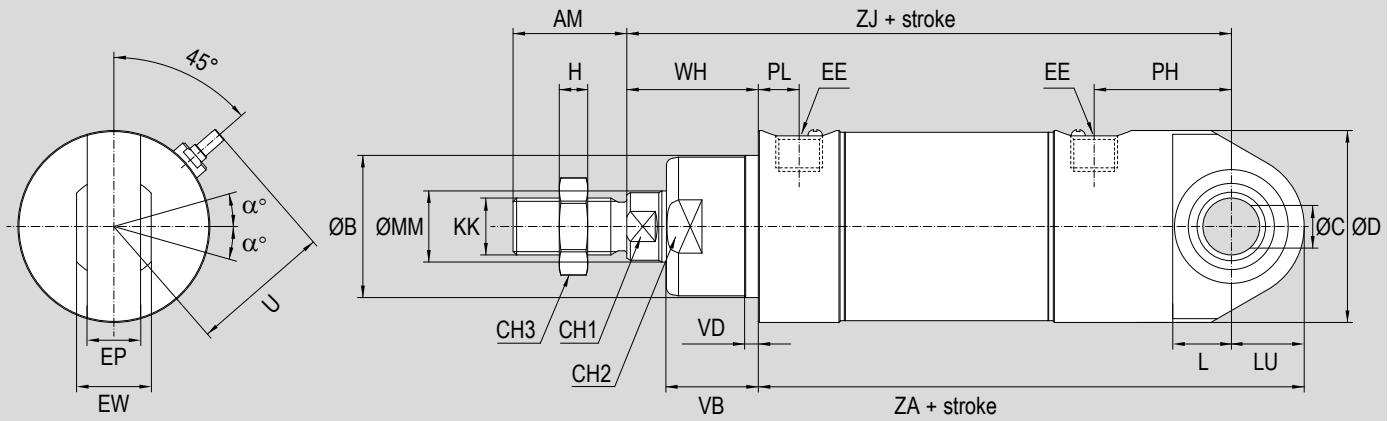

Ø (mm)	AM	ØB d11	ØC H8	ØD	EE	EP	EW	KK	ØMM f7	L	LU	PH
32	22	30	10	36	G1/8"	10,5	14	M10x1,25	12	13	15	32,5
40	24	35	12	45	G1/4"	12	16	M12x1,25	16	16	19	37
50	32	40	16	54	G1/4"	15	21	M16x1,5	20	16,5	20,5	38,5
63	32	45	16	68	G3/8"	15	21	M16x1,5	20	21	24	46,5

Ø (mm)	PL	VB	VD	U	WH	ZA +1 0	ZJ +1 0	CH1	CH2	CH3	H	α°
32	10,5	20	4	26,5	26	131	142	10	29	17	5	13
40	12	22	4	31	30	149	160	13	33	19	6	13
50	11,5	26	4	39,5	37	153,5	170	17	38	24	8	15
63	14,5	25	4	38,5	37	177	190	17	42	24	8	15

Version

32 ÷ 63

Bores Ø

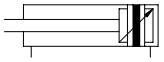

Double acting
Magnetic
With cushionings



Front end cap with demountable nose



Rear end cap with narrow rear clevis ISO AB6

RXDCF

Type



Peculiar characteristics

The front end cap is clean design, with no cavities and demountable nose, allowing maintenance directly on the machine where cylinder is assembled, thus reducing maintenance time. A narrow rear clevis according to ISO AB6 standards is integrated on the rear end cap, this way the dimensions of the cylinder are compliant with ISO 15552 standards. The stainless steel narrow rear eye ISO MP6 (with spherical bearing DIN 648K) type CMSX..AQIS or the stainless steel rear 90° hinge ISO CS7 with DIN 648K spherical bearing type ASSX..AQIS (see page 5.11.50) can be mounted to the integrated narrow rear clevis with the stainless steel anti-rotating pin type SECX..ARAQIS.
The cylinder body is with no chamfers or cavities where dirt can settle. For the same reason, the adjusting cushioning screws are not recessed but protruding the body of the cylinder.

Standard dimensions

Type: **RXDCF**

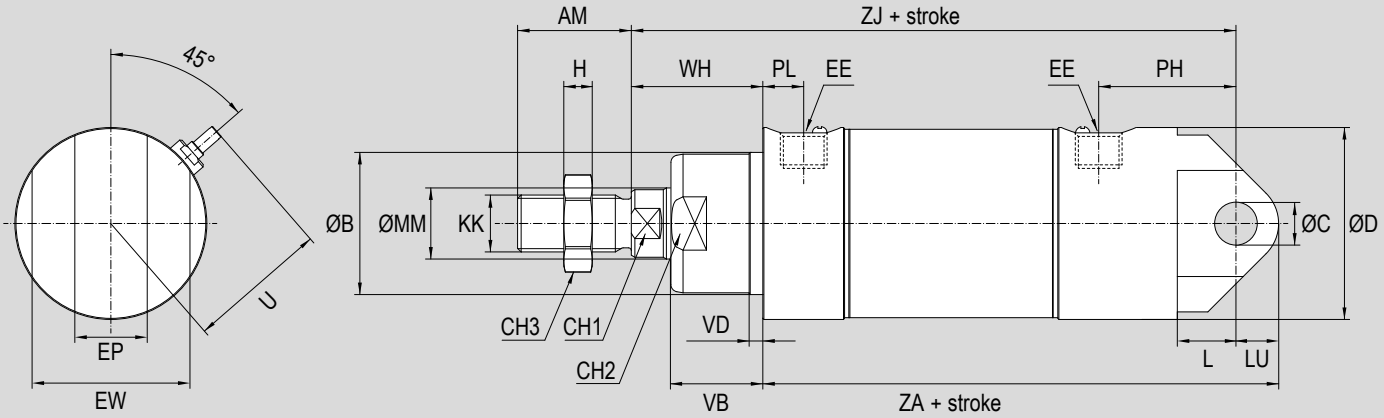

Ø (mm)	AM	ØB d11	ØC H8	ØD	EE	EP	EW	KK	ØMM f7	L	LU	PH
32	22	30	10	36	G1/8"	14	34	M10x1,25	12	16	9	32,5
40	24	35	12	45	G1/4"	16	40	M12x1,25	16	19	10	37
50	32	40	16	54	G1/4"	21	45	M16x1,5	20	21	12	37
63	32	45	16	68	G3/8"	21	51	M16x1,5	20	24	12	46

Ø (mm)	PL	VB	VD	U	WH	ZA +1 0	ZJ +1 0	CH1	CH2	CH3	H
32	10,5	20	4	26,5	26	125	142	10	29	17	5
40	12	22	4	31	30	140	160	13	33	19	6
50	11,5	26	4	39,5	37	145	170	17	38	24	8
63	14,5	25	4	38,5	37	165	190	17	42	24	8

Stainless Steel round cylinders
Series RXDBA

Version

32 ÷ 63	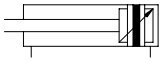			**RXDBA**
Bores Ø	Double acting Magnetic With cushionings	Front end cap with pins	Flat rear end cap	Type



Peculiar characteristics

The front end cap is clean design, with no cavities and demountable nose, allowing maintenance directly on the machine where cylinder is assembled, thus reducing maintenance time. Two pins are integrated in the front end cap, thus allow mounting to supports, and provide an oscillatory movement.
The rear end cap is flat, the cylinder body is with no chamfers or cavities where dirt can settle. For the same reason, the adjusting cushioning screws are not recessed but protruding the body of the cylinder.

Standard dimensions

Type: **RXDBA**

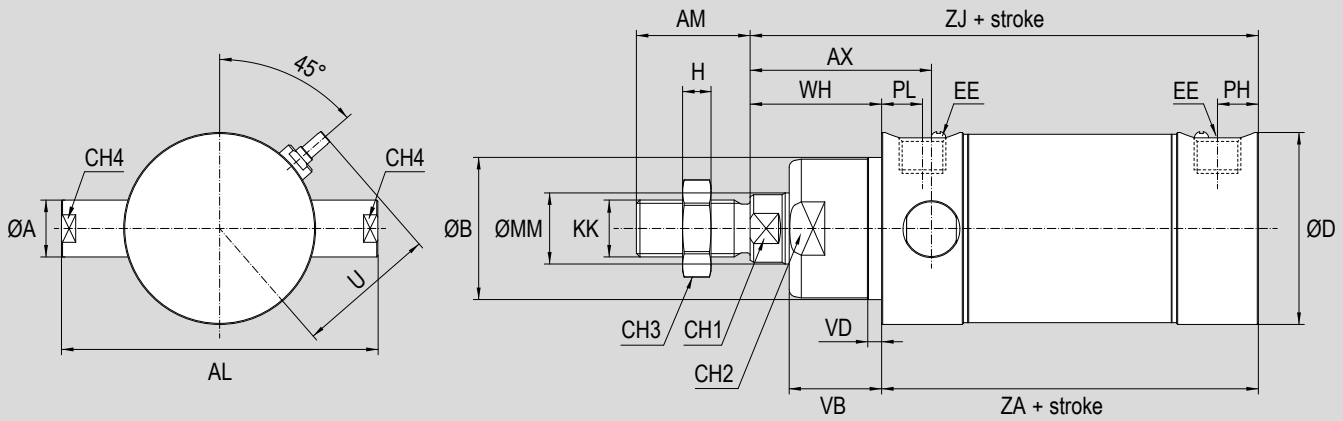

Ø (mm)	ØA f7	AL	AX	AM	ØB d11	ØD	EE	KK	ØMM f7	PL	VB
32	12	67	39	22	30	36	G1/8"	M10x1,25	12	10,5	20
40	12	76	43	24	35	45	G1/4"	M12x1,25	16	12	22
50	16	89	40	32	51	54	G1/4"	M16x1,5	20	11,5	26
63	16	103	47	32	47	68	G3/8"	M16x1,5	20	14,5	25

Ø (mm)	VD	U	WH	ZA +1 0	ZJ +1 0	CH1	CH2	CH3	CH4	H
32	4	26,5	26	94	120	10	29	17	10	5
40	4	31	30	105	135	13	33	19	10	6
50	4	39,5	37	106	143	17	38	24	14	8
63	4	38,5	37	121	158	17	42	24	14	8

Version

32 ÷ 63	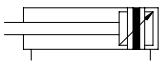			**RXDBP**
Bores Ø	Double acting Magnetic With cushionings	Front end cap with demountable nose	Flat rear end cap with pins	Type



Peculiar characteristics

The front end cap is clean design, with no cavities and demountable nose, allowing maintenance directly on the machine where cylinder is assembled, thus reducing maintenance time. Two pins are integrated in the flat rear end cap, thus allow mounting to supports, and provide an oscillatory movement..
The cylinder body is with no chamfers or cavities where dirt can settle. For the same reason, the adjusting cushioning screws are not recessed but protruding the body of the cylinder.

Standard dimensions

Type: **RXDBP**

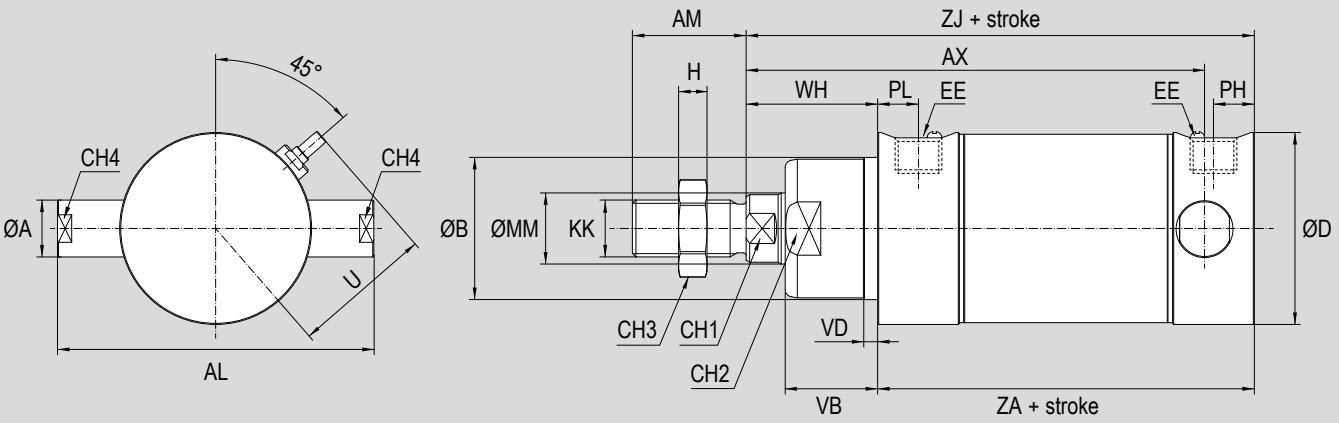

Ø (mm)	ØA f7	AL	AX	AM	ØB d11	ØD	EE	KK	ØMM f7	PL	VB
32	12	67	110	22	30	36	G1/8"	M10x1,25	12	10,5	20
40	12	76	122	24	35	45	G1/4"	M12x1,25	16	12	22
50	16	89	129	32	40	54	G1/4"	M16x1,5	20	11,5	26
63	16	103	148	32	45	68	G3/8"	M16x1,5	20	14,5	25

Ø (mm)	VD	U	WH	ZA +1 0	ZJ +1 0	CH1	CH2	CH3	CH4	H
32	4	26,5	26	94	120	10	29	17	10	5
40	4	31	30	105	135	13	33	19	10	6
50	4	39,5	37	106	143	17	38	24	14	8
63	4	38,5	37	121	158	17	42	24	14	8

Stainless Steel female clevis with pin and seeger FFX..ISO



For cylinder Ø mm	Code	Item	Compliance
32	041055	FFX10ISO	ISO 8140
40	041056	FFX12ISO	
50-63	041057	FFX16ISO	

Stainless Steel bearing heads (DIN 648K) RFX..SE



For cylinder Ø mm	Code	Item	Compliance
32	040009	RFX10SE	ISO 8139
40	041578	RFX12SE	
50-63	040011	RFX16SE	

Stainless Steel self-aligning articulated coupling GBX..



For cylinder Ø mm	Code	Item	Compliance
32	041737	GBX040	-
40	041738	GBX060	
50-63	041739	GBX100	

Stainless Steel self-aligning coupling GCX..



For cylinder Ø mm	Code	Item	Compliance
32	041728	GCXM10x1,25	-
40	041729	GCXM12x1,25	
50-63	041730	GCXM16x1,5	

Stainless Steel rear clevis* CFX..AQIS



For cylinder Ø mm	Code	Item	Compliance
32	040012	CFX032AQIS	ISO MP2
40	040830	CFX040AQIS	
50	040801	CFX050AQIS	
63	040014	CFX063AQIS	

*Matching only with type RXDCM.
Pin type SECX..AQIS to be ordered separately, see page 5.11.91

Stainless Steel narrow rear clevis* (for DIN 648K bearing) CFSX..AQIS



For cylinder Ø mm	Code	Item	Compliance
32	040821	CFSX032AQIS	ISO AB6
40	040822	CFSX040AQIS	
50	040823	CFSX050AQIS	
63	040824	CFSX063AQIS	

*Matching only with type RXDCS.
Anti-rotating pin type SECX..ARAQIS to be ordered separately, see page 5.11.91

Stainless Steel narrow rear eye* with DIN 648K bearing CMSX..AQIS



For cylinder Ø mm	Code	Item	Compliance
32	040834	CMSX032AQIS	ISO MP6 / DIN 648 K
40	040835	CMSX040AQIS	
50	040836	CMSX050AQIS	
63	040010	CMSX063AQIS	

*Matching only with type RXDCF.
Anti-rotating pin type SECX..ARAQIS to be ordered separately, see page 5.11.91

Stainless Steel rear 90°hinge* with DIN 648K spherical bearing ASSX..AQIS



For cylinder Ø mm	Code	Item	Compliance
32	040850	ASSX032AQIS	ISO CS7
40	040851	ASSX040AQIS	
50	040852	ASSX050AQS	
63	040853	ASSX063AQIS	

*Matching only with type RXDCF.
Anti-rotating pin type SECX..ARAQIS to be ordered separately, see page 5.11.91

Stainless Steel pin with seeger* SECX..AQIS



For cylinder Ø mm	Code	Item	Compliance
32	040829	SECX032AQIS	ISO AA4
40	040831	SECX040AQIS	
50	040811	SECX050AQIS	
63	040832	SECX063AQIS	

*Supplied with 2 seeger

Stainless Steel anti-rotating pin with seeger* SECX..ARAQIS



For cylinder Ø mm	Code	Item	Compliance
32	040857	SECX032ARAQIS	ISO AA6
40	040858	SECX040ARAQIS	
50	040859	SECX050ARAQIS	
63	040860	SECX063ARAQIS	

*Supplied with 1 seeger

Stainless Steel foot-flange* PX..AQM



For cylinder Ø mm	Code	Item	Compliance
32	040119	PX032AQM	-
40	040120	PX040AQM	
50	040137	PX050AQM	
63	040138	PX063AQM	

*Matching only with type RXDVA and type RXDVD; for mounting require stainless steel head nut type GH..AQM, see alongside.

Stainless Steel head nut* GHX..AQM



For cylinder Ø mm	Code	Item	Compliance
32	040069	GHX032AQM	-
40	040187	GHX040AQM	
50-63	040188	GHX050/063AQM	

*Matching only with type RXDVA and type RXDVD.

Magnetic reed switch T groove ASV..



For cylinder Ø mm	Code	Item	Cylinder matching
32 ÷ 63	070946	ASV1C525	RXD*
	071863	ASV1C550	
	071864	ASV1C51K	
	071189	ASV1C5M8	
	073639	ASV4D225	
	070246	ASV4D2M8	
	074900	ASV7N225	
	070247	ASV7N2M8	
	070372	ASV7M2M8	
	072918	ASV1H525	

*With bracket type AFR1063 for magnetic reed switches T groove

ATEX magnetic reed switch T groove MK..



For cylinder Ø mm	Code	Item	Compliance	Cylinder matching
32 ÷ 63	071120	MK500A	Ex 3D	RXD*
	071108	MK502A	Ex II1G	

*With bracket type AFR1063 for magnetic reed switches T groove

Bracket for magnetic reed switch T groove type AFR..



For cylinder Ø mm	Code	Item	Compliance
32 ÷ 63	072907	AFR1063	-

STAINLESS STEEL

round cylinders Series RDX - RDMX - RDMAX



Find out our
key products

- **Solution for most applications**
- **Easy and intuitive choice**
- **Excellent value for money**
- **Wide availability**
- **Fast delivery**

Main features and certifications

Series of Stainless Steel Round Cylinders in bores from Ø 32 to 63, double acting, magnetic or not magnetic, with or without cushiongs. Supplied as standard in compliance to Reach and RoHS directives, and SIL certified. On request, can be also supplied according to the 2014/34/EU ATEX Directive.

Type RDX Ø 32 ÷ 63

from page 5.13.20



Stainless Steel round cylinders not conforming to standards, available in bores from Ø 32 to 63, double acting, not magnetic. Heads are joined to barrel through rolling, thus ensure a perfect tightening. Supplied complete with rod nut and head nut.

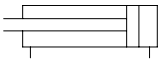

Type RDMX Ø 32 ÷ 63

from page 5.13.20



Stainless Steel round cylinders not conforming to standards, available in bores from Ø 32 to 63, double acting, magnetic. Heads are joined to barrel through rolling, thus ensure a perfect tightening. Supplied complete with rod nut and head nut.

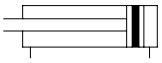

Type RDMAX Ø 32 ÷ 40

from page 5.13.40



Stainless Steel round cylinders not conforming to standards, available in bores from Ø 32 to 63, double acting, magnetic, with adjustable cushionings. Heads are joined to barrel through rolling, thus ensure a perfect tightening. Supplied complete with rod nut and head nut.

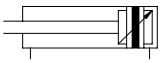

Options

Description		Symbol	Suffix
Through rod		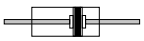	**P**
FKM seals	-20°C ÷ +150°C		**V**
FKM rod seal	-20°C ÷ +80°C	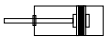	**V1**
Low temperature seals	-40°C ÷ +80°C		**BT**
Special male thread (indicate the requested thread. E.g.: R-M 10x1,5; the dimension AM of the special thread will be the same as the standard; cylinder will be supplied without rod nut; for further information please contact the sales department)		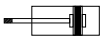	**R-M..**
ATEX versions on request			**/ATEX**
Special versions on request			**/S**

The options, when this is possible, can be combined with each other. For options matching see the table at page 5.13.4; For code key see from page 5.13.5

Options matching

Series	Bore	Model	Standard options matching					
			P	**V**	**V1**	**BT**	**RM..**(1)	**/ATEX**
RDX RDMX	Ø 32 ÷ 63	Standard	●	●	●	●	●	●
		Through rod (P)		●	●	●	●	●
RDMAX	Ø 32 ÷ 40	Standard	●	●	●	●	●	●
		Through rod (P)		●	●	●	●	●

Key
● matching accessory; – not matching accessory

Options matching - note

(1) Option **R-M..** require to indicate the desired thread; for models with through rod option (**P**) the special male thread option (**R-M..**) are applied on both sides of the rod. For further information please contact the sales department.

Standard materials

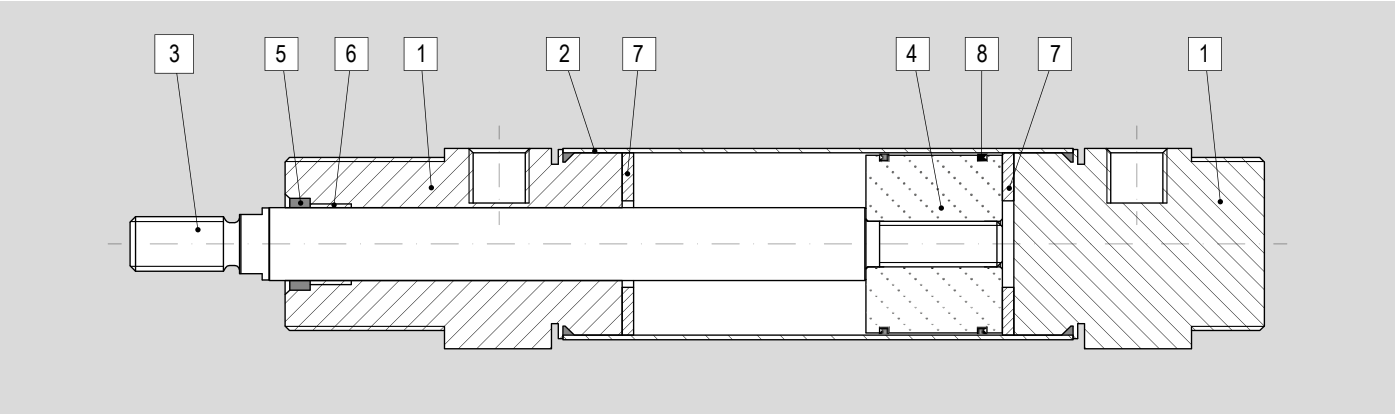

Position	Description	Material
1	Heads	Stainless Steel AISI 304
2	Tube	Stainless Steel AISI 304
3	Rod	Stainless Steel AISI 316
4	Piston	Aluminium
5	Rod seal	Special polyurethane
6	Bushing	Sintered bronze
7	Damper	NBR
8	Seals	NBR / Polyurethane (PU)

Code key

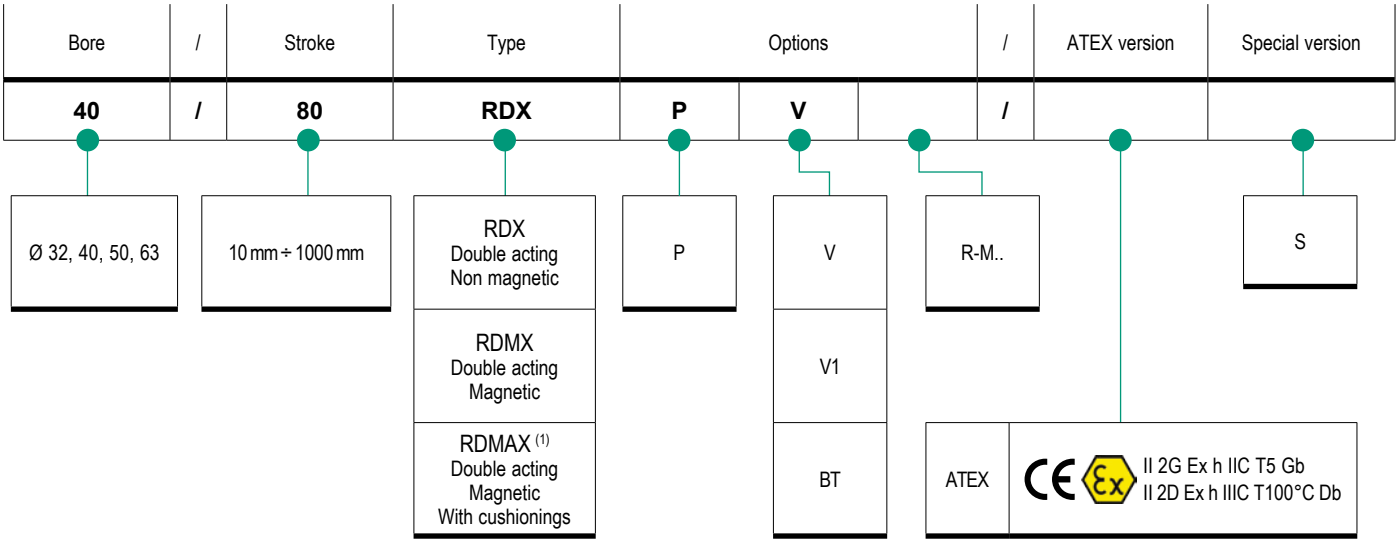

How to order

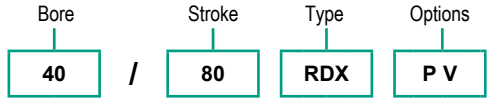

Notes

For standard materials see the table in the next page.

Options in the same grid are alternative to each others.

For further information on options and their matching, see page 5.13.3 e 5.13.4

For further infomation on the ATEX 2014/34/EU Directive, on classifications and protections, see from page III.1

(1) Available only for bores Ø 32 and 40.

Accessories

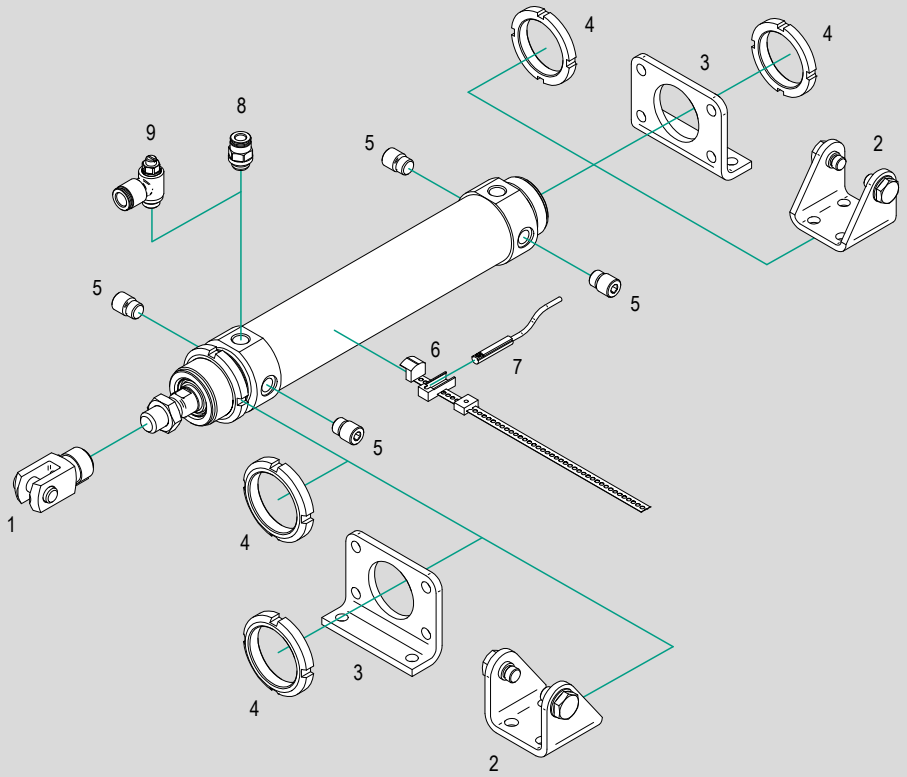

N.	Cylinder bore	Item	Description	Compliance	Matching			Code key page	Data sheet page
					RDX	RDMX	RDMAX		
1	Ø 32 ÷ 63	FFX..DIN	Stainless Steel DIN female clevis with pin and seeger	UNI 1676 DIN 71752	●	●	●	5.13.90	5.52.1
2	Ø 32 ÷ 63	CFX..AQM	Stainless Steel rear clevis	-	●	●	●		5.73.1
3	Ø 32 ÷ 63	PX..AQM	Stainless Steel foot-flange		●	●	●		5.73.1
4	Ø 32 ÷ 63	GHX..AQM	Stainless Steel head nut		●	●	●		5.73.2
5	Ø 32 ÷ 63	SECX..AQM	Stainless Steel pin		●	●	●		5.73.2
6	Ø 32 ÷ 63	AFR..	Bracket for magnetic reed switch T groove		-	●	●		1.120.3
7	Ø 32 ÷ 63	ASV..	Magnetic reed switch T groove		-	●	●		1.110.10
		MK..	ATEX magnetic reed switch T groove	2014/34/UE	-	●	●		1.113.1
8	Ø 32 ÷ 63	RX	Stainless steel push-in fittings	-	●	●	●	5.302.1	
9	Ø 32 ÷ 63	VX..C	Stainless Steel flow controls, for cylinders		●	●	●	5.372.1	

Key
● matching accessory; - not matching accessory

Stainless Steel round cylinders
Series RDX - RDMX

Main features

32 ÷ 63	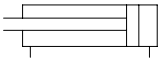	**RDX**
Bores Ø	Double acting Non magnetic	Type
32 ÷ 63	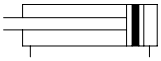	**RDMX**
Bores Ø	Double acting Magnetic	Type





Technical data

Bore Ø	32	40	50	63
Fluid	Filtered compressed air with or without lubrication. Lubrication, if started, must be continued.			
Pressure range	1 ÷ 10 bar			
Temperature range	-20°C ÷ +80°C (standard)	-20°C ÷ +150°C (V)	-40°C ÷ +80°C (BT)	
Strokes	25 ÷ 1000 mm			
Ports	1/8"	1/4"		3/8"
Rod thread	M10x1,5	M12x1,75	M16x2	

Standard strokes

	RDX Bore Ø mm			
Stroke mm	32	40	50	63
25				
50				
80				
100				
125				
160				
200				
250				
320				
400				
500				

	RDMX Bore Ø mm			
Stroke mm	32	40	50	63
25				
50				
80				
100				
125				
160				
200				
250				
320				
400				
500				

Key
Standard stroke

Standard dimensions

Type: **RDX - RDMX**

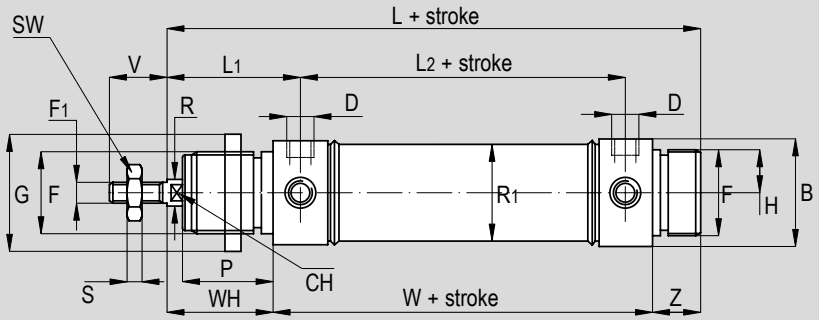

Ø (mm)	V	F	P	D	F_1	R	L_2	Z	WH	W	L_1	L	R_1	H	S	ØB	CH	SW	ØG
32	20	M30x1,5	30	G1/8"	M10x1,5	12	78	14	38	96	47	148	33,6	17,5	6	38	10	17	45
40	24	M38x1,5	35	G1/4"	M12x1,75	16	89	16	45	113	57	174	41,6	21	7	46	13	19	50
50	32	M45x1,5	38	G1/4"	M16x2	20	96	18	50	120	62	188	52,4	26,5	8	57	17	24	58
63	32	M45x1,5	38	G3/8"	M16x2	20	98	18	50	124	63	192	65,4	32,5	8	70	17	24	58

Dimensions with options

Type: **...P**

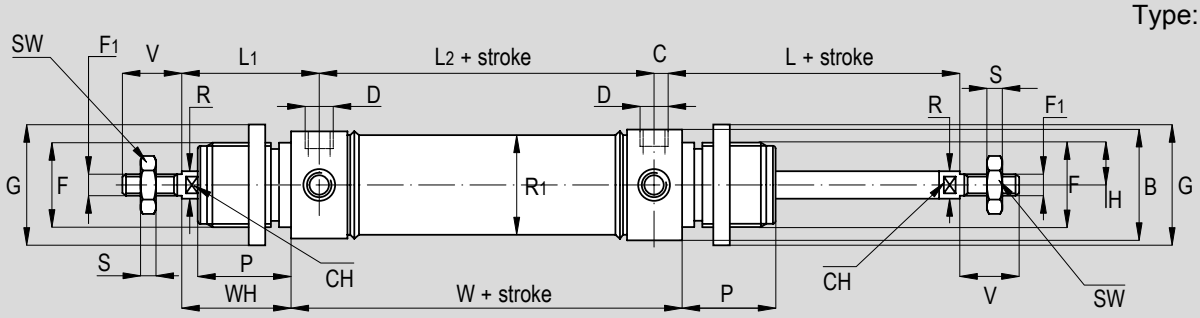

Ø (mm)	V	F	P	D	F_1	R	L_2	WH	W	L	C	L_1	R_1	H	S	ØB	CH	SW	ØG
32	20	M30x1,5	30	G1/8"	M10x1,5	12	78	38	96	38	9	47	33,6	17,5	6	38	10	17	45
40	24	M38x1,5	35	G1/4"	M12x1,75	16	89	45	113	45	12	57	41,6	21	7	46	13	19	50
50	32	M45x1,5	38	G1/4"	M16x2	20	96	50	120	50	12	62	52,4	26,5	8	57	17	24	58
63	32	M45x1,5	38	G3/8"	M16x2	20	98	50	124	50	13	63	65,4	32,5	8	70	17	24	58

Stainless Steel round cylinders
Series RDMAX

Main features

32 ÷ 63

Bores Ø

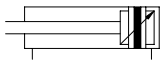

Double acting
Magnetic
With cushionings

RDMAX

Type



Technical data

Bore Ø	32	40
Fluid	Filtered compressed air with or without lubrication. Lubrication, if started, must be continued.	
Pressure range	1 ÷ 10 bar	
Temperature range	-20°C ÷ +80°C (standard) -20°C ÷ +150°C (V) -40°C ÷ +80°C (BT)	
Strokes	25 ÷ 1000 mm	
Ports	1/8"	1/4"
Rod thread	M10x1,5	M12x1,75

Standard strokes

	RDMAX Bore Ø mm	
Stroke mm	32	40
25		
50		
80		
100		
125		
160		
200		
250		
320		
400		
500		

Key
Standard stroke

Standard dimensions

Type: **RDMAX**

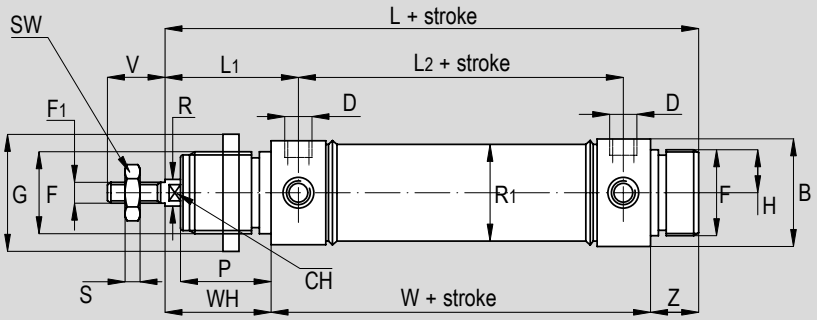

Ø (mm)	V	F	P	D	F_1	R	L_2	Z	WH	W	L_1	L	R_1	H	S	ØB	CH	SW	ØG
32	20	M30x1,5	30	G1/8"	M10x1,5	12	78	14	38	96	47	148	33,6	17,5	6	38	10	17	45
40	24	M38x1,5	35	G1/4"	M12x1,75	16	89	16	45	113	57	174	41,6	21	7	46	13	19	50

Dimensions with options

Type: **...P**

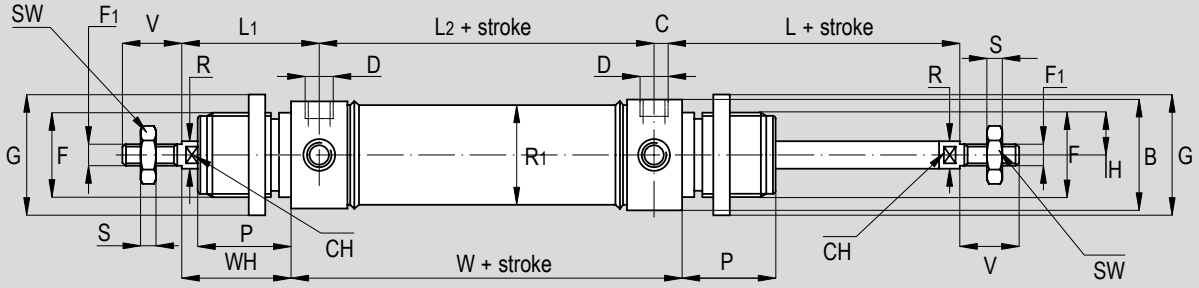

Ø (mm)	V	F	P	D	F_1	R	L_2	WH	W	L	C	L_1	R_1	H	S	ØB	CH	SW	ØG
32	20	M30x1,5	30	G1/8"	M10x1,5	12	78	38	96	38	9	47	33,6	17,5	6	38	10	17	45
40	24	M38x1,5	35	G1/4"	M12x1,75	16	89	45	113	45	12	57	41,6	21	7	46	13	19	50

Accessories for stainless steel round cylinders
Series RDX - RDMX - RDMAX

Stainless Steel female clevis with pin and seeger FFX..DIN



For cylinder Ø mm	Code	Item	Compliance
32	041070	FFX10DIN	DIN 71752 / UNI 1676
40	041216	FFX12DIN	
50-63	041078	FFX16DIN	

Stainless steel rear clevis* with pins CFX..AQM



For cylinder Ø mm	Code	Item	Compliance
32	040113	CFX032AQM	-
40	040111	CFX040AQM	
50	040139	CFX050AQM	
63	040031	CFX063AQM	

*Kit composed by rear clevis and two pins.

Stainless Steel foot-hinge* PX..AQM



For cylinder Ø mm	Code	Item	Compliance
32	040119	PX032AQM	-
40	040120	PX040AQM	
50	040137	PX050AQM	
63	040138	PX063AQM	

*Mounting require stainless steel head nut type GH..AQM, see below

Stainless Steel pin* SECX..AQM



For cylinder Ø mm	Code	Item	Compliance
32	040174	SECX032AQM	-
40	040175	SECX040AQM	
50	040176	SECX050AQM	
63	040177	SECX063AQM	

*Kit composed by two pins.

Stainless Steel head nut GHX..AQM



For cylinder Ø mm	Code	Item	Compliance
32	040069	GHX032AQM	-
40	040187	GHX040AQM	
50-63	040188	GHX050/063AQM	

Bracket for magnetic reed switch T groove type AFR..



For cylinder Ø mm	Code	Item	Compliance
32 ÷ 63	072907	AFR1063	-

Magnetic reed switch T groove ASV..



For cylinder Ø mm	Code	Item	Cylinder matching
32 ÷ 63	070946	ASV1C525	RDMX* RDMAX*
	071863	ASV1C550	
	071864	ASV1C51K	
	071189	ASV1C5M8	
	073639	ASV4D225	
	070246	ASV4D2M8	
	074900	ASV7N225	
	070247	ASV7N2M8	
	070372	ASV7M2M8	
	072918	ASV1H525	

*With bracket type AFM.. for magnetic reed switches T groove

ATEX magnetic reed switch T groove MK..



For cylinder Ø mm	Code	Item	Compliance	Cylinder matching
32 ÷ 63	071120	MK500A	Ex 3D	RDMX* RDMAX*
	071108	MK502A	Ex II1G	

*With bracket type AFM.. for magnetic reed switches T groove

Notes

STAINLESS STEEL

compact cylinders ISO 21287



Find out our
key products

- **Solution for most applications**
- **Easy and intuitive choice**
- **Excellent value for money**
- **Wide availability**
- **Fast delivery**

Main features and certifications

Series of Stainless Steel compact cylinders conforming to ISO 21287 standards in bores from Ø 25 to 100, single or double acting, magnetic. Compatible with mounting accessories for cylinders ISO 15552. Supplied as standard in compliance to Reach and RoHS directives, and SIL certified. Lubrication with synthetic grease long lasting for applications with low start up, granting low friction and a permanent lubrication film. Fully composed by non-toxic elements conforming to FDA Directive section 21 CFR 178 about accidental contact with food (registered NSF H1). On request, can be also supplied according to the 2014/34/EU ATEX Directive.

21287

Type CIXS Ø 25 ÷ 100

from page 5.20.20



Stainless Steel compact cylinders conforming to ISO 21287 standards in bores from Ø 25 to 100, single acting, magnetic, with female thread and equipped with elastic dampers on the piston

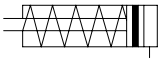

Type CIX Ø 25 ÷ 100

from page 5.20.20



Stainless Steel compact cylinders conforming to ISO 21287 standards in bores from Ø 25 to 100, double acting, magnetic, with female thread and equipped with elastic dampers on the piston

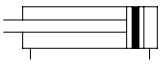

Options

Description		Symbol	Suffix
Anti-rotating plate (available ony for type CIX)		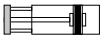	**N**
Rear spring (available ony for type CIXS)		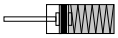	**T**
Male threaded rod		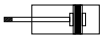	**M**
Through rod		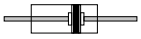	**P**
FKM seals	-20°C ÷ +150°C	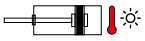	**V**
FKM rod seal	-20°C ÷ +80°C	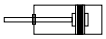	**V1**
Low temperature seals	-40°C ÷ +80°C	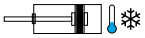	**BT**
Extended rod (indicate the requested WH dimension in mm, E.g.: WH=100; for further information please contact the sales department)		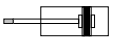	**WH=..**
Special thread (indicate the requested thread. E.g.: R-M 10x1,5; if combined with option M, the AM dimension of the special thread will be the same as the standard; the cylinder will be supplied without rod nut; for further information please contact the sales department).		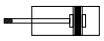	**R-M..**
ATEX versions on request			**/ATEX**
Special versions on request			**/S**

The options, when this is possible, can be combined with each other. For options matching see the table below; For code key see from page 5.20.4

Options matching

Series	Bore	Model	Standard options matching									
			N	**T**	**M**	**P**	**V**	**V1**	**BT**	**WH=..**(1)	**R-M..**(2)	**/ATEX**
CIXS	Ø 25 ÷ 100	Standard	-	●	●	●	●	●	●	●	●	●
		Rear spring (T)	-		●	-	●	●	●	●	●	●
		Male threaded rod (M)	-	●		●	●	●	●	●	●	●
		Through rod (P)	-	-	●		●	●	●	●	●	●
CIX	Ø 25 ÷ 100	Standard	●	-	●	●	●	●	●	●	●	●
		Anti-rotating plate (N)		-	-	●	●	●	●	●	●	●
		Male threaded rod (M)	-	-		●	●	●	●	●	●	●
		Through rod (P)	●	-	●		●	●	●	●	●	●

Key
● matching accessory; - not matching accessory

Options matching - note

(1) Option **WH=..** require to indicate the desired dimension in mm; for models with through rod option (**P**) the extended rod option (**WH=..**) is applied only to one side of the rod. For further information please contact the sales department.

(2) Option **R-M..** require to indicate the desired thread; for models with through rod option (**P**) the special male thread option (**R-M..**) are applied on both sides of the rod. For further information please contact the sales department.

Code key

Bore	/	Stroke	Type	Options	
40	**/**	**80**	**CIX**		

- **Bore**: Ø 25, 32, 40, 50, 63, 80, 100
- **Stroke**: See page 5.20.20
- **Type**:
  - CIXS — Single acting Magnetic
  - CIX — Double acting Magnetic
- **Options**:
  - N(1)
  - T(2)

Standard materials

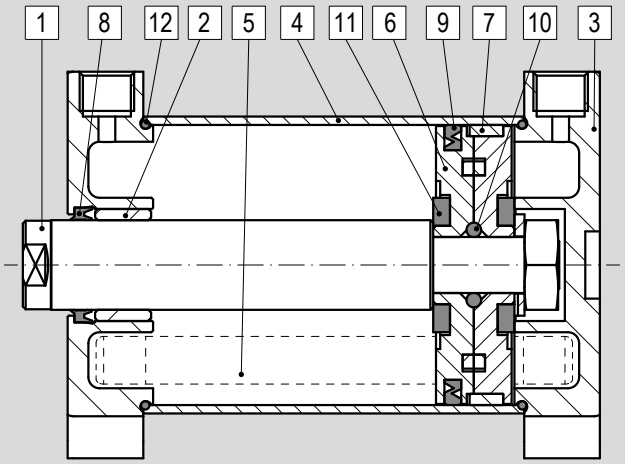

Position	Description	Material
1	Rod	Stainless Steel AISI 316L
2	Bushing	Stainless Steel with PTFE
3	Heads	Stainless Steel AISI 316L
4	Tube	Stainless Steel AISI 316L
5	Tie-rods	Stainless Steel AISI 316L
6	Piston	Aluminium
7	Guide ring	PTFE
8	Rod seal	Polyurethane (PU)
9	Piston seal	NBR
10	Semipiston O-ring	NBR
11	Elastic damper	NBR
12	Tube seal	NBR

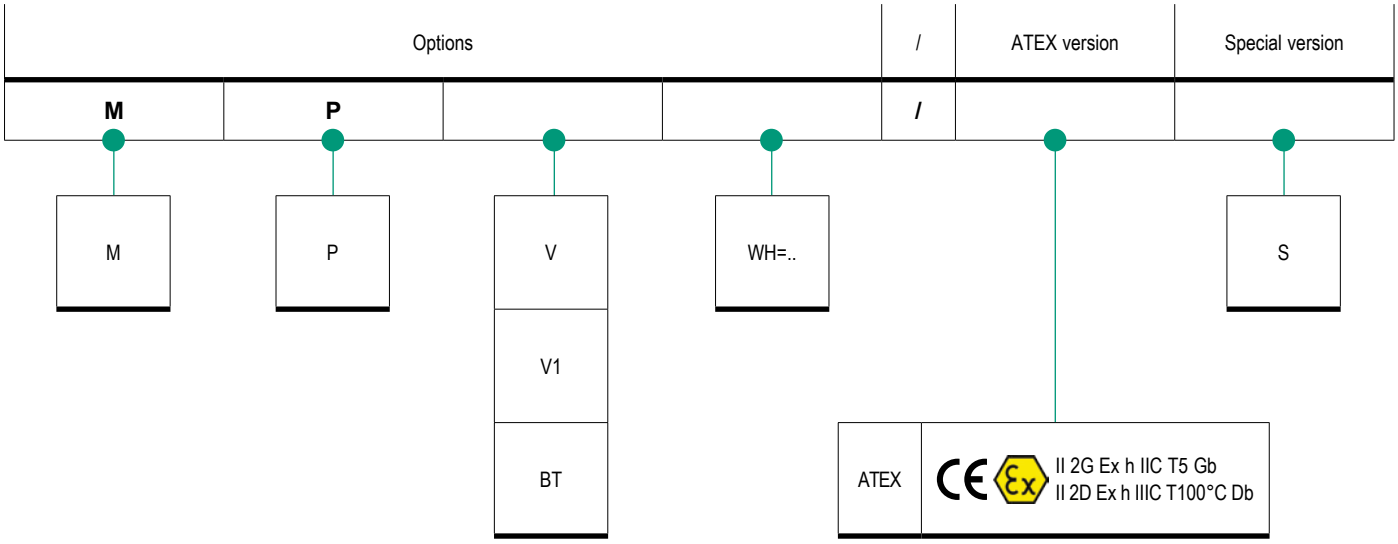

How to order

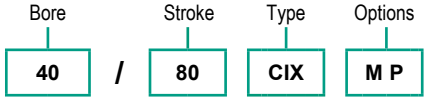

Notes

For standard materials see the table in the next page.
Options in the same grid are alternative to each others.
For further information on options and their matching, see page 5.20.3
For further infomation on the ATEX 2014/34/EU Directive, on classifications and protections, see from page III.1
(1) Available only for type CIX.
(2) Available only for type CIXS.

Standard* seal kit

Number of components	Description
n. 1	Rod seal
n. 2	Tube seal
n. 1	Piston seal
n. 1	Semipiston O-ring
n. 1	Piston guide ring
n. 2	Elastic dampers

*For cylinders with options P, V, V1 or BT the kit include further components,

Standard seal kit code key

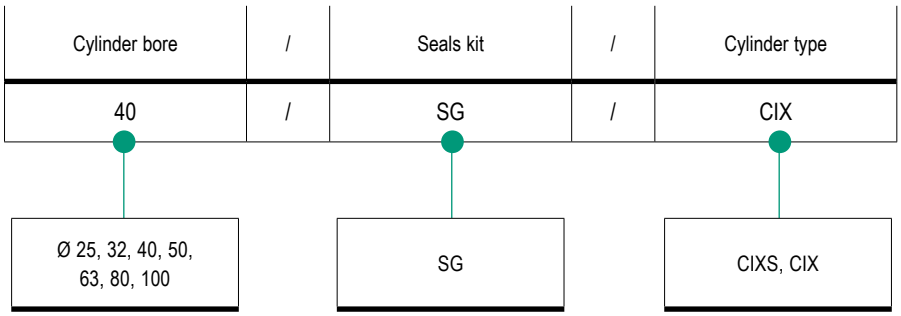

Accessories

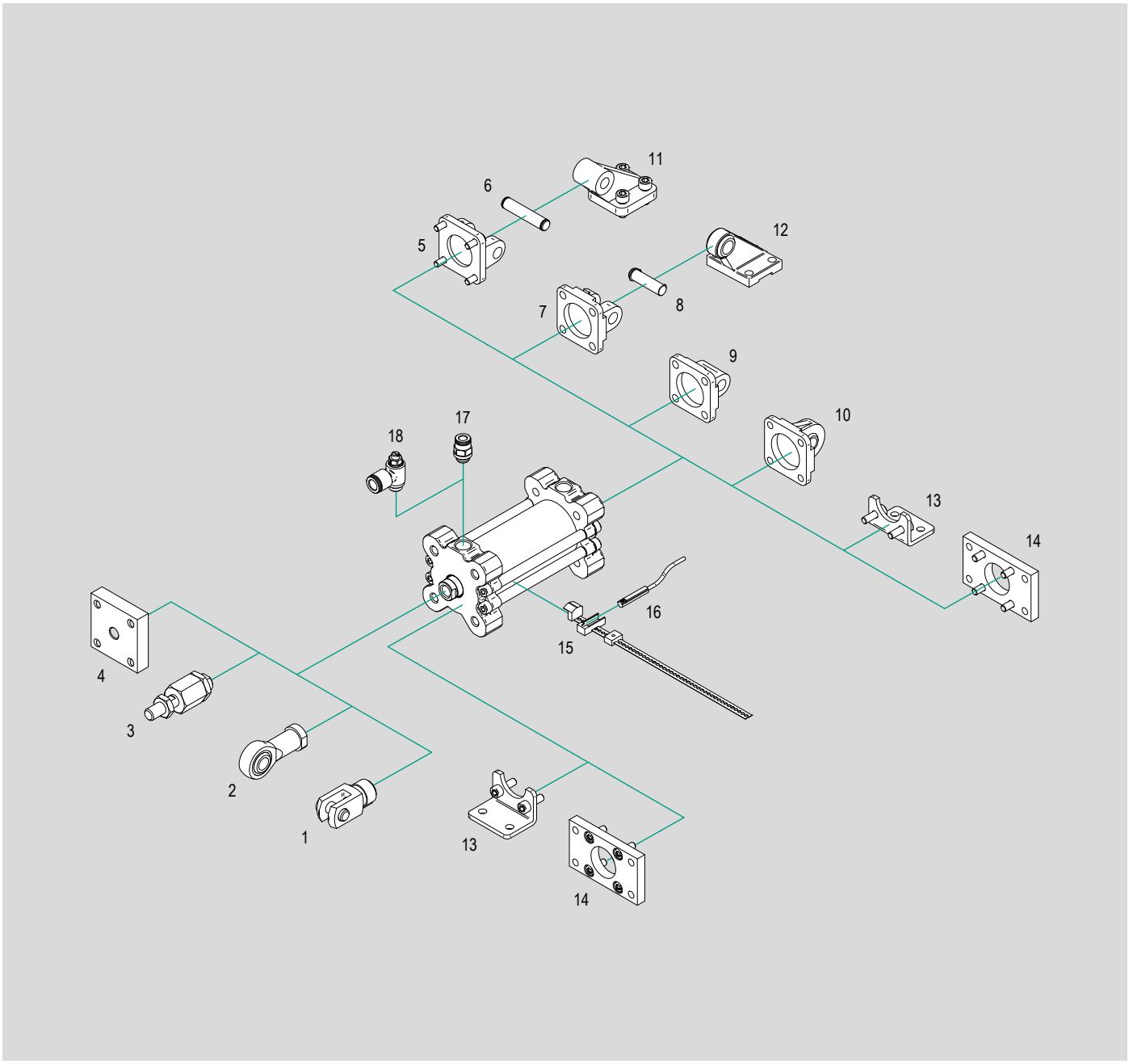

N.	Cylinder bore	Item	Description	Compliance	Matching		Code key page	Data sheet page
					CIXS	CIX		
1	Ø 25 ÷ 100	FFX..ISO	Stainless Steel ISO female clevis with pin and seeger	ISO 8140	●(1)	●(1)	5.20.90	5.52.1
2	Ø 25 ÷ 100	RFX..SE	Stainless Steel bearing heads (DIN 648K) with female thread	ISO 8139	●(1)	●(1)		5.54.1
3	Ø 25 ÷ 100	GBX..	Stainless Steel self-aligning articulated coupling	-	●(1)	●(1)		5.55.1
4	Ø 25 ÷ 100	GCX..	Stainless Steel self-aligning coupling		●(1)	●(1)		5.57.1
5	Ø 32 ÷ 100	CFX..AQIS	Stainless Steel rear clevis	ISO MP2	●	●		5.77.1
6	Ø 32 ÷ 100	SECX..AQIS	Stainless Steel pin with seeger	ISO AA4	●	●	5.20.91	5.75.5
7	Ø 32 ÷ 100	CFSX..AQIS	Stainless Steel narrow rear clevis (for DIN 648K bearing)	ISO AB6	●	●	5.20.90	5.77.1
8	Ø 32 ÷ 100	SECX..ARAQIS	Stainless Steel anti-rotating pin with seeger	ISO AA6	●	●	5.20.91	5.75.5
9	Ø 32 ÷ 100	CMX..AQIS	Stainless Steel rear eye	ISO MP4	●	●	5.20.90	5.77.2
10	Ø 32 ÷ 100	CMSX..AQIS	Stainless Steel narrow rear eye with DIN 648K bearing	ISO MP6	●	●		5.77.2
11	Ø 32 ÷ 100	ASVX..AQIS	Stainless Steel rear 90° hinge	ISO AB7 CETOP RP 107P	●	●		5.77.3
12	Ø 32 ÷ 100	ASSX..AQIS	Stainless Steel rear 90° hinge with DIN 648K spherical bearing	ISO CS7	●	●		5.77.3
13	Ø 25 ÷ 100	PBX..	Stainless Steel low foot	ISO MS1	●	●	5.20.91	5.77.4
14	Ø 32 ÷ 100	FLVX..AQIS	Stainless Steel flange	ISO VDMA MP1/MP2	●	●		5.77.4
15	Ø 25 ÷ 63	AFR..	Bracket for magnetic reed switch T groove	-	●	●		1.120.3
16	Ø 25 ÷ 63	ASV..	Magnetic reed switch T groove		●	●		1.110.10
		MK..	ATEX magnetic reed switch T groove	2014/34/UE	●	●		1.113.1
17	Ø 25 ÷ 100	RX	Stainless steel push-in fittings	-	●	●	5.302.1	
18	Ø 25 ÷ 100	VX..C	Stainless Steel flow controls, for cylinders		●	●	5.372.1	

Key

● matching accessory; – not matching accessory

(1) Matching with option **M** only

Main features

25 ÷ 100
Bores Ø

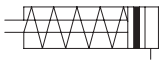

Single acting
Magnetic
With female thread

CIXS
Type

25 ÷ 100
Bores Ø

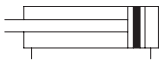

Double acting
Magnetic
With female thread

CIX
Type





Technical data

Bore Ø		25	32	40	50	63	80	100
Fluid		Filtered compressed air with or without lubrication. Lubrication, if started, must be continued.						
Pressure range	CIXS	2 ÷ 10 bar						
	CIX	1 ÷ 10 bar						
Temperature range		-20°C ÷ +80°C (standard / V1)			-20°C ÷ +150°C (V)		-40°C ÷ +80°C (BT)	
Ports		M5	1/8"					
Strokes	CIXS*	5 ÷ 25 mm						
	CIX	5 ÷ 300 mm	5 ÷ 400 mm				5 ÷ 500 mm	
Rod thread	CIX-CIXS	M6	M8		M10		M12	
	CIXM-CIXSM	M8x1,25	M10x1,25		M12x1,25		M16x1,5	

*With option N the maximum stroke for bore Ø 25 is 200mm, for bores Ø 32÷63 is 300mm, for bores Ø 80÷100 is 400mm;

Standard strokes

	CIXS Bore Ø mm						
Stroke mm	25	32	40	50	63	80	100
5							
10							
15							
20							
25							

	CIX Bore Ø mm						
Stroke mm	25	32	40	50	63	80	100
5							
10							
15							
20							
25							
30							
40							
50							
60							
80							
100							
160							
200							
250							
300							
350							
400							
450							
500							

Key
Standard stroke

Allowable radial loads

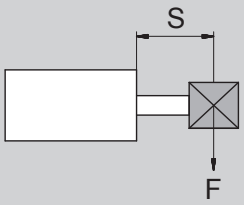

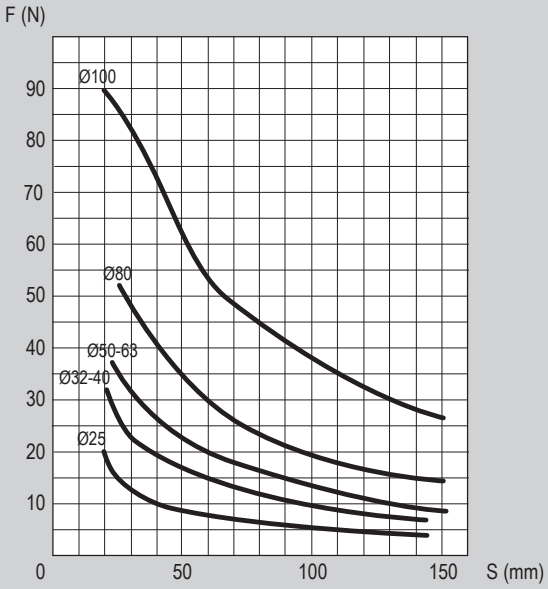

Theoretical thrust force

Unit: N

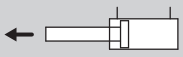

Ø Cylinder (mm)	Pressure range (bar)
	6
25	294
32	482
40	754
50	1178
63	1869
80	3014
100	4710

Theoretical traction force

Unit: N

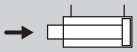

Ø Cylinder (mm)	Pressure range (bar)
	6
25	247
32	414
40	633
50	989
63	1681
80	2720
100	4416

Theoretical spring force (for CIXS type only)

Unit: N

Cylinder Ø (mm)	Strokes (mm)									
	5		10		15		20		25	
	F1	F2	F1	F2	F1	F2	F1	F2	F1	F2
25	30	33	26	33	23	33	20	33	16	33
32	50	54	46	54	42	54	38	54	34	54
40	52	55	50	55	46	55	43	55	40	55
50	59	63	54	63	49	63	44	63	39	63
63	-	-	-	-	62	78	56	78	51	78
80	-	-	-	-	100	116	95	116	89	116
100	-	-	-	-	136	159	129	159	121	159

Standard dimensions

Type: **CIXS-CIX**

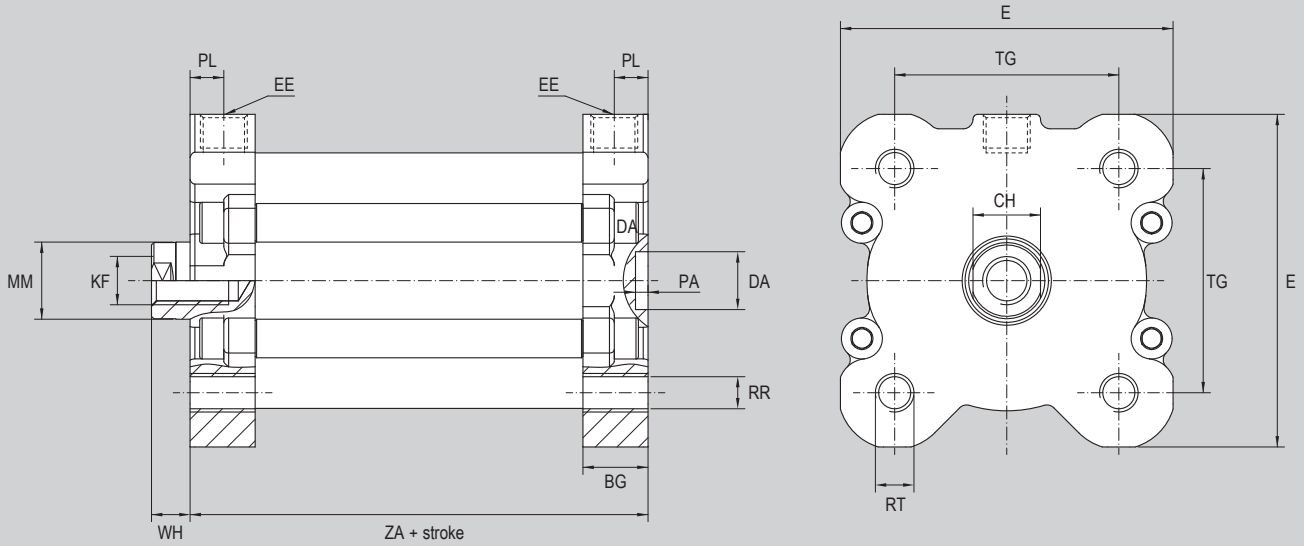

Ø (mm)	ØMM f7	WH	ZA	ZB	KF	EE	BG	RR	TG	E	RT	PL	CH	ØDA h9	PA +0,1
25	10	6	39	45	M6	M5	15	4,1	26	40	M5	5	8	9	2,1
32	12	7	44	51	M8	G 1/8"	16	-	32,5	47,5	M6	7	10	9	2,1
40	12	7	45	52	M8	G 1/8"	16	5,1	38	55	M6	7,5	10	9	2,1
50	16	8	45	53	M10	G 1/8"	16	6,4	46,5	66	M8	7,5	14	12	2,6
63	16	8	49	57	M10	G 1/8"	16	6,4	56,5	78	M8	7	14	12	2,6
80	20	10	54	64	M12	G 1/8"	17	8,4	72	96	M10	8	17	12	2,6
100	20	10	67	77	M12	G 1/8"	17	8,4	89	116	M10	8,5	17	12	2,6

Dimensions with options

Type: **...T**

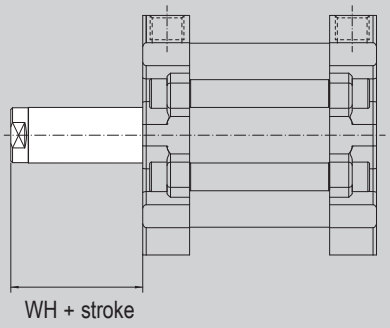

Type: **...M**

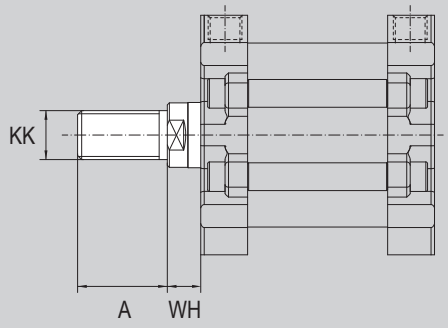

Type: **...P**

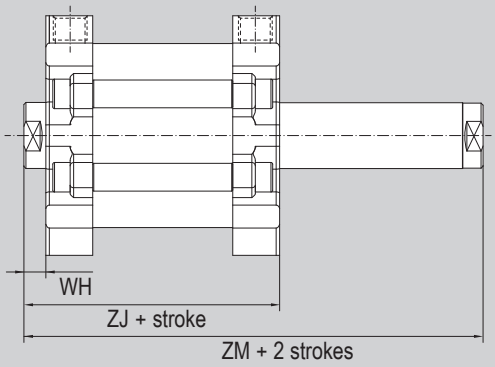

Type: **...N**

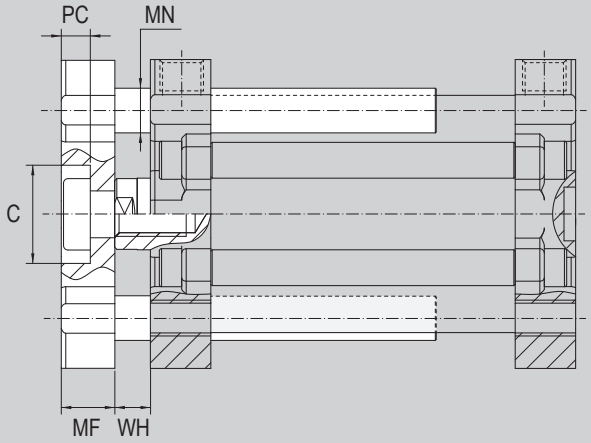

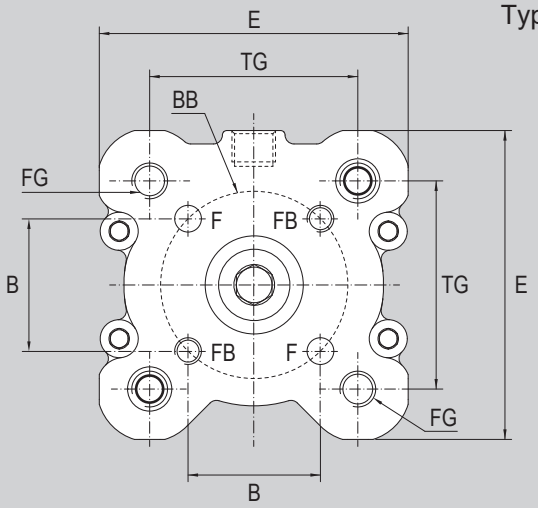

Ø (mm)	A	KK	WH	ZJ	ZM	MF +0,1	E	TG	B	FG	ØBB ±0,1	ØF +0,1	ØFB	ØC H9	PC	ØMN f7
25	16	M8x1,25	6	45	51	8	40	26	15.6	M5	22	5	M5	14	4,5	6
32	19	M10x1,25	7	51	58	10	50	32,5	19.8	M6	28	5	M5	17	5,5	8
40	19	M10x1,25	7	52	59	10	55	38	23,3	M6	33	5	M5	17	5,5	8
50	22	M12x1,25	8	53	61	12	66	46,5	29,7	M8	42	6	M6	22	6,5	10
63	22	M12x1,25	8	57	65	12	78	56,5	35,4	M8	50	6	M6	22	6,5	10
80	28	M16x1,5	10	64	74	14	96	72	46	M10	65	8	M8	24	7,5	10
100	28	M16x1,5	10	77	87	14	116	89	56.6	M10	80	10	M10	24	7,5	12

Stainless Steel female clevis* with pin and seeger FFX..ISO



For cylinder Ø mm	Code	Item	Compliance
25	041054	FFX08ISO	ISO 8140
32-40	041055	FFX10ISO	
50-63	041056	FFX12ISO	
80-100	041057	FFX16ISO	

*Matching with option M only

Stainless Steel bearing heads* (DIN 648K) RFX..SE



For cylinder Ø mm	Code	Item	Compliance
25	041577	RFX8SE	ISO 8139
32-40	040009	RFX10SE	
50-63	041578	RFX12SE	
80-100	040011	RFX16SE	

*Matching with option M only

Stainless Steel self-aligning articulated coupling* GBX..



For cylinder Ø mm	Code	Item	Compliance
25	041736	GBX020	-
32-40	041737	GBX040	
50-63	041738	GBX060	
80-100	041739	GBX100	

*Matching with option M only

Stainless Steel self-aligning coupling* GCX..



For cylinder Ø mm	Code	Item	Compliance
32-40	041728	GCXM10x1,25	-
50-63	041729	GCXM12x1,25	
80-100	041730	GCXM16x1,5	

*Matching with option M only

Stainless Steel rear clevis CFX..AQIS



For cylinder Ø mm	Code	Item	Compliance
32	040012	CFX032AQIS	ISO MP2
40	040830	CFX040AQIS	
50	040801	CFX050AQIS	
63	040014	CFX063AQIS	
80	040013	CFX080AQIS	
100	040838	CFX100AQIS	

Pin type SECX..AQIS to be ordered separately, see page 5.20.91

Stainless Steel rear eye CMX..AQIS



For cylinder Ø mm	Code	Item	Compliance
32	040805	CMX032AQIS	ISO MP4
40	040806	CMX040AQIS	
50	040802	CMX050AQIS	
63	040808	CMX063AQIS	
80	040016	CMX080AQIS	
100	040799	CMX100AQIS	

Stainless Steel narrow rear clevis (for DIN 648K bearing) CFSX..AQIS



For cylinder Ø mm	Code	Item	Compliance
32	040821	CFSX032AQIS	ISO AB6
40	040822	CFSX040AQIS	
50	040823	CFSX050AQIS	
63	040824	CFSX063AQIS	
80	040825	CFSX080AQIS	
100	040826	CFSX100AQIS	

Anti-rotating pin type SECX..ARAQIS to be ordered separately, see page 5.20.91

Stainless Steel narrow rear eye with DIN 648K bearing CMSX..AQIS



For cylinder Ø mm	Code	Item	Compliance
32	040834	CMSX032AQIS	ISO MP6
40	040835	CMSX040AQIS	
50	040836	CMSX050AQIS	
63	040010	CMSX063AQIS	
80	040837	CMSX080AQIS	
100	040848	CMSX100AQIS	

Stainless Steel rear 90° hinge ASVX..AQIS



For cylinder Ø mm	Code	Item	Compliance
32	040809	ASVX032AQIS	ISO AB7 cetop RP 107P
40	040810	ASVX040AQIS	
50	040812	ASVX050AQIS	
63	040813	ASVX063AQIS	
80	040814	ASVX080AQIS	
100	040815	ASVX100AQIS	

Stainless Steel rear 90°hinge with DIN 648K spherical bearing ASSX..AQIS



For cylinder Ø mm	Code	Item	Compliance
32	040850	ASSX032AQIS	ISO CS7
40	040851	ASSX040AQIS	
50	040852	ASSX050AQIS	
63	040853	ASSX063AQIS	
80	040854	ASSX080AQIS	
100	040855	ASSX100AQIS	

Stainless Steel low foot* PBX..AQIS



For cylinder Ø mm	Code	Item	Compliance
32	040872	PBX032AQIS	ISO MS1
40	040873	PBX040AQIS	
50	040874	PBX050AQIS	
63	040875	PBX063AQIS	
80	040876	PBX080AQIS	
100	040877	PBX100AQIS	

*Supplied individually

Stainless Steel flange FLVX..AQIS



For cylinder Ø mm	Code	Item	Compliance
32	040864	FLVX032AQIS	ISO VDMA MF1 / MF2
40	040865	FLVX040AQIS	
50	040840	FLVX050AQIS	
63	040866	FLVX063AQIS	
80	040867	FLVX080AQIS	
100	040868	FLVX100AQIS	

Stainless Steel flat head allen screw type VBTRX to be ordered separately, see page 5.79.1

Stainless Steel pin with seeger* SECX..AQIS



For cylinder Ø mm	Code	Item	Compliance
32	040829	SECX032AQIS	ISO AA4
40	040831	SECX040AQIS	
50	040811	SECX050AQIS	
63	040832	SECX063AQIS	
80	040015	SECX080AQIS	
100	040839	SECX100AQIS	

*Supplied with 2 seeger

Stainless Steel anti-rotating pin with seeger* SECX..ARAQIS



For cylinder Ø mm	Code	Item	Compliance
32	040857	SECX032ARAQIS	ISO AA6
40	040858	SECX040ARAQIS	
50	040859	SECX050ARAQIS	
63	040860	SECX063ARAQIS	
80	040861	SECX080ARAQIS	
100	040862	SECX100ARAQIS	

*Supplied with 1 seeger

Magnetic reed switch T groove ASV..



For cylinder Ø mm	Code	Item	Cylinder matching
25 ÷ 63	070946	ASV1C525	CIXS CIX
	071863	ASV1C550	
	071864	ASV1C51K	
	071189	ASV1C5M8	
	073639	ASV4D225	
	070246	ASV4D2M8	
	074900	ASV7N225	
	070247	ASV7N2M8	
	070372	ASV7M2M8	
	072918	ASV1H525	

ATEX magnetic reed switch T groove MK..



For cylinder Ø mm	Code	Item	Compliance	Cylinder matching
25 ÷ 63	071120 ✦	MK500A	Ex 3D	CIXS CIX
	071108 ✦	MK502A	Ex II1G	

Bracket for magnetic reed switch T groove type AFR..



For cylinder Ø mm	Code	Item	Compliance
25 ÷ 63	072907	AFR1063	-

Notes

STAINLESS STEEL

rod accessories for cylinders



Find out our
key products

- **Solution for most applications**
- **Easy and intuitive choice**
- **Excellent value for money**
- **Wide availability**
- **Fast delivery**

Main features and certifications

Stainless Steel rod accessories for cylinders. Wide range of accessories for the cylinder piston rod fully made of stainless steel,to suite all applications.
All rod accessories are supplied in compliance with Reach and RoHS directives.

Stainless Steel clevis ISO

from page 5.52.1



Series of stainless steel female clevis conforming to ISO 8140 standards for mounting onto the male piston rod of the cylinder.

Stainless Steel clevis DIN

from page 5.52.1



Series of stainless steel female clevis conforming to DIN 71752 standards for mounting onto the male piston rod of the cylinder.

Stainless Steel bearing heads

from page 5.54.1



Stainless Steel Bearings. Self-lubricating bearing heads (DIN 648K) with female thread, servicing-free conforming to ISO 8139 standard.

Stainless Steel self-aligning articulated coupling

from page 5.55.1



Bearings. Self-aligning articulated coupling. Supplied with hexagonal nut. For mounting onto the male piston rod of the cylinder. Allow to compensate the angular and parallel misalignments. Suitable for applications with high tractions.

Stainless Steel self-aligning coupling

from page 5.57.1



Couplings. Self-aligning articulated coupling for mounting onto the male piston rod of the cylinder. Allow to compensate the angular and parallel misalignments.

Matching

Item	Description	Matching with stainless steel cylinders					See page
		ISO6432 MDMX.. MDMAX..	ISO15552 AMX..	ROUND RDX.. RDMX.. RDMAX..	ROUND RXD..	ISO21287 CIX..	
FFX..ISO	Stainless Steel ISO clevis	●	●	-	●	●(1)	5.52.1
FFX..DIN	Stainless Steel DIN clevis	-	-	●	-	-	5.52.1
RFX..SE	Stainless Steel bearing heads	●	●	-	●	●(1)	5.54.1
GBX..	Stainless Steel self-aligning articulated coupling	●	●	-	●	●(1)	5.55.1
GCX..	Stainless Steel self-aligning coupling	●	●	-	●	●(1)	5.57.1

Key
● allowed matching; - not allowed matching
(1) matching with option M only.

Main features

8 ÷ 200 — Bores Ø

ISO 8140

FFX..ISO — Type

Options

Description	Suffix
Special versions on request	/S



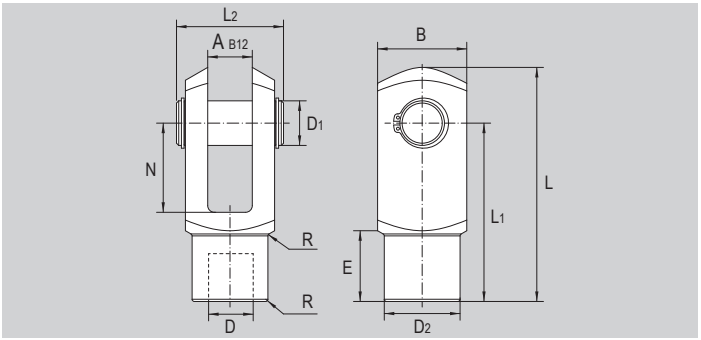

Technical data

Type	Description	Materials
FFX..ISO	Female clevis. Conforming to ISO standards. Supplied complete with pin and seeger.	Stainless Steel AISI 316

Dimensions

For cylinder Ø mm	Code	Item	D (thread)	A_{B12}	B	D_1	D_2	E	L	L_1	L_2	N	R	Weight (g)
8-10	041052	FFX04ISO/DIN	M4x0,7	4	8	4	8	6	21	16	11	8	0,5	7
12-16	041053	FFX06ISO/DIN	M6x1	6	12	6	10	9	31	24	16	12	0,5	19
20	041054	FFX08ISO	M8x1,25	8	16	8	14	12	42	32	22	16	0,5	47
25-32	041055	FFX10ISO	M10x1,25	10	20	10	18	15	52	40	25	20	0,5	89
40	041056	FFX12ISO	M12x1,25	12	24	12	20	18	62	48	30	24	0,5	153
50-63	041057	FFX16ISO	M16x1,5	16	32	16	26	24	83	64	39	32	1	320
80-100	041058	FFX20ISO	M20x1,5	20	40	20	34	30	105	80	48	40	1	680
125	041112	FFX27ISO	M27x2	30	55	30	48	38	148	110	-	54	1	-
160-200	041113	FFX36ISO	M36x2	35	70	35	60	40	188	144	-	72	1	-

Main features

8 ÷ 63 — Bores Ø

DIN 71752

FFX..DIN — Type

Options

Description	Suffix
Special versions on request	/S



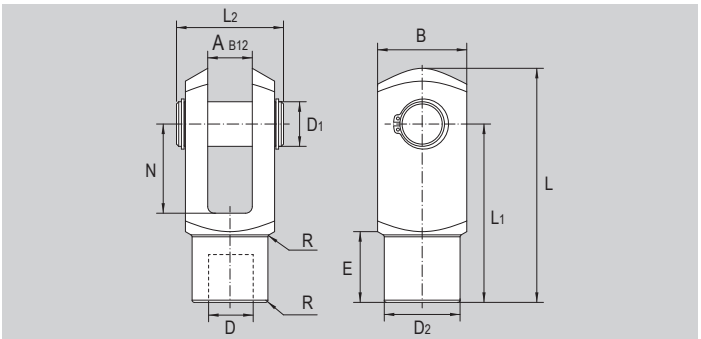

Technical data

Type	Description	Materials
FFX..DIN	Female clevis. Conforming to DIN standards. Supplied complete with pin and seeger.	Stainless Steel AISI 316

Dimensions

For cylinder Ø mm	Code	Item	D (thread)	A_{B12}	B	D_1	D_2	E	L	L_1	L_2	N	R	Weight (g)
8-10	041052	FFX04ISO/DIN	M4x0,7	4	8	4	8	6	21	16	11	8	0,5	7
*	041071	FFX05DIN	M5x0,8	6	10	5	9	7,5	26	20	13,5	10	0,5	12
12-16	041053	FFX06ISO/DIN	M6x1	6	12	6	10	9	31	24	16	12	0,5	19
32**	041070	FFX10DIN	M10x1,5	10	20	10	18	15	52	40	25	20	0,5	89
40**	041216	FFX12DIN	M12x1,75	12	24	12	20	18	62	48	30	24	0,5	153
50-63**	041078	FFX16DIN	M16x2	16	32	16	26	24	83	64	39	32	1	320

*For cylinders not conforming to standards; **For cylinders series RDX, RDMX, RDMAX

Main features

8 ÷ 200 — Bores Ø

ISO 8139

RFX..SE — Type



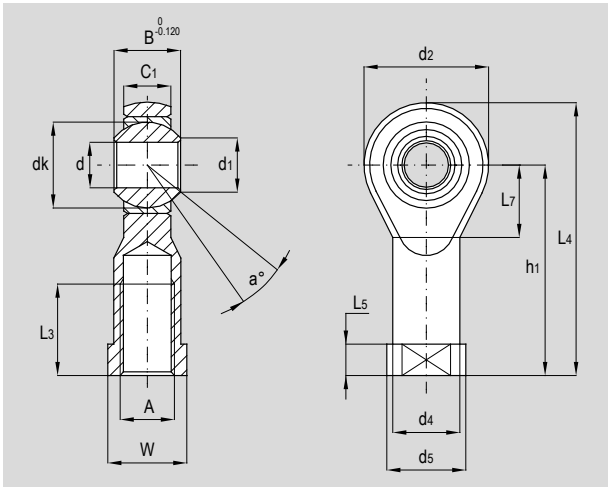

Technical data

Type	Description	Materials
RFX..SE	Bearings. Bearing head (DIN 648K) self lubricating and servicing free, with female thread.	Stainless Steel AISI 304

Dimensions

For cylinders ISO Ø mm	Code	Item	d h6	A h7	B	C_1	d_1	d_2	d_4	d_5	dk	h_1	L_3	L_4	L_5	L_7	W	a°	Static load (daN)	Weight (g)
8-10	041576	RFX5SE	5	M4x0,7	8	6	7,7	18	9	11	11,112	27	10	36	4	10	9	13	600	19
12-16	041570	RFX6SE	6	M6x1	9	6,75	8,9	20	10	13	12,700	30	12	40	5	11	11	13	700	26
20	041577	RFX8SE	8	M8x1,25	12	9	10,4	24	12,50	16	15,875	36	16	48	5	13	14	14	1200	46
25-32	040009	RFX10SE	10	M10x1,25	14	10,50	12,9	28	15	19	19,050	43	20	57	6,5	15	17	13	1400	75
40	041578	RFX12SE	12	M12x1,25	16	12	15,4	32	17,50	22	22,225	50	22	66	6,5	17	19	13	1900	112
50-63	040011	RFX16SE	16	M16x1,5	21	15	19,3	42	22	27	28,575	64	28	85	8	23	22	15	4800	220
80-100	041579	RFX20SE	20	M20x1,5	25	18	24,3	50	27,50	34	34,925	77	33	102	10	27	30	14	5200	406
125	041580	RFX30SE	30	M27x2	37	25	34,8	70	40	50	50,800	110	51	145	15	36	41	17	10800	1120
160-200	041581	RFX35SE	35	M36x2	43	28	37,7	80	46	58	57,150	125	56	165	17	41	50	19	12400	1595

Stainless Steel rod accessories for cylinders

Bearings - Stainless Steel self-aligning articulated coupling

Main features

8 ÷ 125	**GBX**
Bores Ø	Type



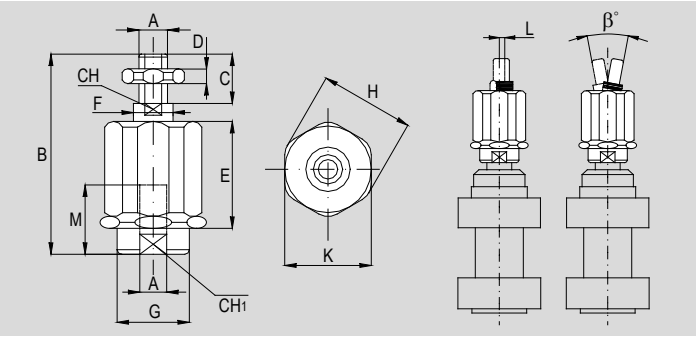

Options

Description	Suffix
Special versions on request	/S

Technical data

Type	Description	Materials
GBX..	Bearings. Self-aligning articulated coupling. Supplied with hexagonal nut. For mounting onto the male piston rod of the cylinder. Allow to compensate the angular and parallel misalignments. Suitable for applications with high tractions.	Stainless Steel AISI 303

Dimensions

For cylinders ISO Ø mm	Code	Item	A (thread)	B	C	D	E	ØF	ØG	ØH	K	L	M	β°	CH	CH_1	Max thrust and traction load (N)	Weight (g)
8-10	041734	GBX008	M4x0,7	33	8	2,2	15,5	6	8,5	14,5	12	1	10	3,2	10	12	750	20
12-16	041735	GBX010	M6x1	39	12	3,2	17,5	6	8,5	14,5	13	1	10	5	10	7	1200	23
20	041736	GBX020	M8x1,25	55	16	4	24,5	8	12,5	19	17	2	20	7	10	10	2500	60
25-32	041737	GBX040	M10x1,25	73	20	5	34	14	21	32	30	2	20	12	10	19	5000	230
40	041738	GBX060	M12x1,25	77	24	6	34	14	21	32	30	2	20	12	10	19	5000	230
50-63	041739	GBX100	M16x1,5	108	32	8	54	22	33,5	45	41	2	32	19	10	30	10000	650
80-100	041721	GBX120	M20x1,5	122	40	9	54	22	33,5	45	41	2	40	19	10	30	10000	710
125	041740	GBX130	M27x2	147	54	13,5	55	-	59	60	55	-	40	24	-	32	-	1600

Main features

25 ÷ 200	**GCX**
Bores Ø	Type

Options

Description	Suffix
Special versions on request	/S



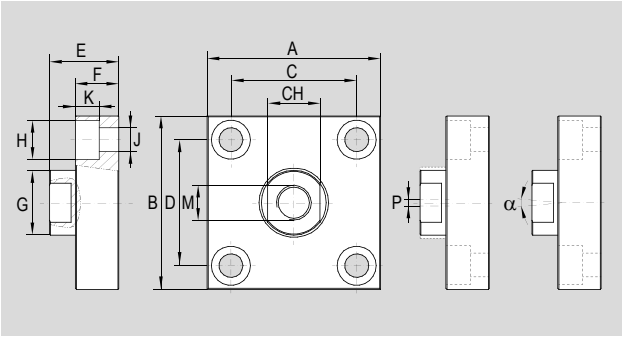

Technical data

Type	Description	Materials
GCX..	Couplings. Self-aligning articulated coupling for mounting onto the male piston rod of the cylinder. Allow to compensate the angular and parallel misalignments.	Stainless Steel AISI 303

Dimensions

M (thread)	Code	Item	A	B	C	D	CH	E	F	ØG	ØH	ØJ	K	P	α	Weight (g)
M10x1,25	041728	GCXM10x1,25	60	37	36 ±0,15	23 ±0,15	17	24	15	20	11	6,6	7	2	0,4÷0,8	300
M12x1,25	041729	GCXM12x1,25	60	56	42 ±0,2	38 ±0,2	19	30	20	25	15	9	9	2	0,4÷0,8	400
M16x1,5	041730	GCXM16x1,5	80	80	58 ±0,2	58 ±0,2	24	32	20	30	18	11	11	2	0,4÷0,8	900
M20x1,5	041731	GCXM20x1,5	90	90	65 ±0,2	65 ±0,2	36	35	20	40	20	14	13	2	0,4÷0,8	1100
M27x2	041732	GCXM27x2	90	90	65 ±0,2	65 ±0,2	36	35	20	40	20	14	13	2	0,4÷0,8	1100
M36x2	041733	GCXM36x2	125	125	90 ±0,2	90 ±0,2	50	73,5	30	60	26	18	17	3	0,4÷0,95	3400

Notes

STAINLESS STEEL

mounting accessories for cylinders



Find out our
key products

- **Solution for most applications**
- **Easy and intuitive choice**
- **Excellent value for money**
- **Wide availability**
- **Fast delivery**

Main features and certifications

Series of stainless steel mounting accessories for cylinders. For front, rear or center mounting, or to couple with other accessories (e.g.: hinges), to allow the choice of the most appropriate mounting. All mounting accessories are supplied in compliance with Reach and RoHS directives.

Stainless Steel mountings for cylinders ISO 6432

from page 5.71.1



Series of stainless steel mountings for cylinders ISO 6432. Rear clevises ISO MP3, flanges ISO MS3 and high feet ISO MF8.

Stainless Steel mountings for round cylinders type RDX, RDMX, RDMAX

from page 5.73.1



Series of stainless steel mountings for round cylinders type RDX, RDMX and RDMAX. Rear clevises, foot-hinges, pins and head nuts.

Stainless Steel mountings for round cylinders series RXD

from page 5.73.50



Series of stainless steel mountings for round cylinders series RXD (only for type with integrated clevises or with threaded end caps): rear clevises ISO MP2, rear eyes ISO MP4, narrow rear clevises ISO AB6, 90° rear hinges ISO AB7 CETOP RP107P, pins ISO AA4, pins ISO AA6, foot-hinges and head nuts.

Stainless Steel mountings for cylinders ISO 15552

from page 5.75.1



Series of stainless steel mountings for cylinders ISO 15552. Rear clevises ISO MP2, rear eye ISO MP4, narrow rear clevises ISO AB6 and narrow rear eyes ISO MP6 with spherical bearing DIN 648K, flanges ISO-VDMA MF1/MF2, 90° rear hinges ISO AB7 CETOP RP107P and 90° rear hinges ISO CS7 with spherical bearing DIN 648K, low feet ISO MS1, pins ISO AA4, pins ISO AA6 and center trunnions ISO MT4.

Stainless Steel mountings for compact cylinders ISO 21287

from page 5.77.1



Series of stainless steel mountings for compact cylinders ISO 21287. Rear clevises ISO MP2, rear eye ISO MP4, narrow rear clevises ISO AB6 and narrow rear eyes ISO MP6 with spherical bearing DIN 648K, flanges ISO-VDMA MF1/MF2, 90° rear hinges ISO AB7 CETOP RP107P and 90° rear hinges ISO CS7 with spherical bearing DIN 648K and low feet ISO MS1.

Stainless Steel mounting screws and grains for cylinders

from page 5.79.1



Series of stainless steel mounting elements for cylinders. Scews conforming to UNI5931 standards, screws conforming to DIN 6912 standards and grains conforming to DIN 127B standards.

Stainless Steel mounting accessories for cylinders

Stainless Steel mountings for cylinders ISO 6432

Main features

12 ÷ 25 — Bores Ø

ISO MP3

CFX — Type



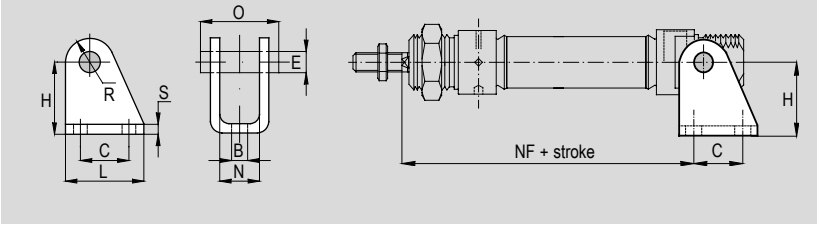

Technical data

Type	Description	Material
CFX..	Mounting for cylinders. Rear clevis. Supplied with pin and two seeger.	Stainless Steel AISI 304

Dimensions

For cylinder Ø mm	Code	Item	B	E	C	H	L	N	O	R	S	NF	Weight (g)
12	040046	CFX12-16	5,5	6	15	27	25	12,1	24	7	3	-	36
16												80	
20	040047	CFX20-25	6,5	8	20	30	32	16,1	31	10	4	91	78
25												100	

Main features

12 ÷ 25 — Bores Ø

ISO MS3

PX — Type



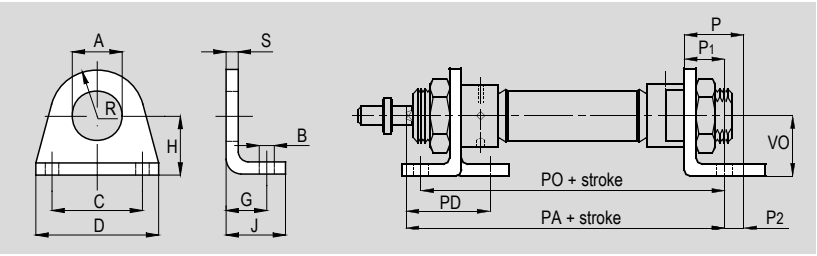

Technical data

Type	Description	Material
PX..	Mounting for cylinders in steel. High foot. For rear or front mounitng (head nut required. One head nut supplied with cylinders as standard). Supplied individually.	Stainless Steel AISI 304

Dimensions

For cylinder Ø mm	Code	Item	A	B	C	D	G	H	J	R	S	PD	PO	PA	P	P_1	P_2	VO	Weight (g)
12	040026	PX12-16	16,1	5,5	32	42	14	20	20	13	4	32	-	-	20	14	6	20	40
16													84	92					
20	040027	PX20-25	22,1	6,6	40	54	17	25	25	20	5	36	102	109	25	17	8	25	90
25												40	103,5	114,5					

Main features

12 ÷ 25 — Bores Ø

ISO MF8

FX — Type



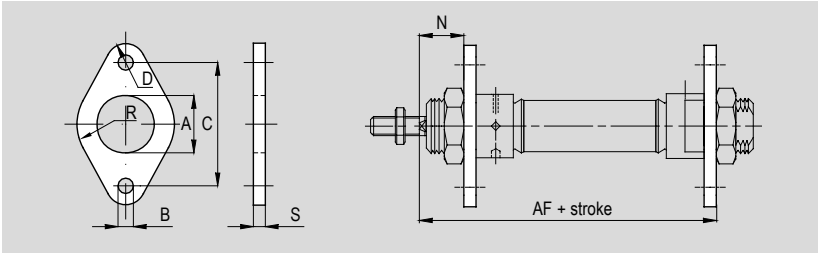

Technical data

Type	Description	Material
FX..	Mounting for cylinders. Flange. For rear or front mounitng (head nut required. One head nut supplied with cylinders as standard). Supplied individually.	Stainless Steel AISI 304

Dimensions

For cylinder Ø mm	Code	Item	A	B	C	R	D	S	N	AF	Weight (g)
12	040006	FX12-16	16	5,5	40	15	6	4	18	77	26
16										82	
20	040007	FX20-25	22	6,6	50	20	8	5	19	97	60
25									23	102,5	

Stainless Steel mounting accessories for cylinders

Stainless Steel mountings for round cylinders type RDX, RDMX, RDMAX

Main features

32 ÷ 63

Bores Ø

CFX..AQM

Type



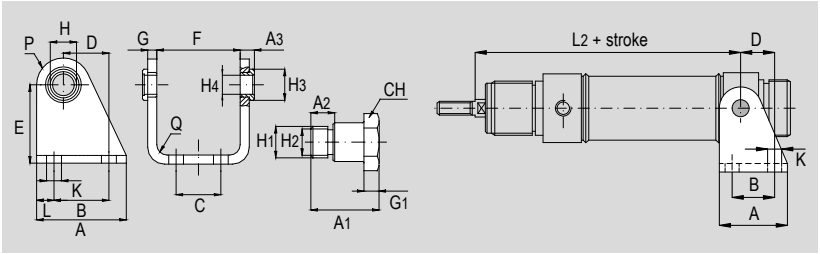

Technical data

Type	Description	Material
CFX..AQM	Mounting for round cylinders type RDX, RDMX, RDMAX. Rear clevis. For front or rear mounting. Supplied with two pins.	Stainless Steel AISI 304

Dimensions

For cylinder Ø mm	Code	Item	A	A_1	A_2	A_3	B	C	D	E	F	G	G_1	H	H_1	H_2	H_3	H_4	CH	K	L	P	Q	L_3
32	040113	CFX032AQM	40	18	6	6	24	20	20	35	38,1	4	4	12	10	M8x1	12	10	13	7	8	12	4	125
40	040111	CFX040AQM	50	21,6	7	7	30	28	27	40	46,1	5	5	15	12	M10x1	15	12	17	9	10	13	5	146
50	040139	CFX050AQM	54	26,4	9	8,5	34	36	30	45	57,1	6	6	18	14	M12x1,5	20	14	19	9	10	14	6	158
63	040031	CFX063AQM	65	33,5	13	8,5	35	42	34	50	70,1	6	6	20	16	M14x1,5	23	16	19	9	15	16	6	161

Main features

32 ÷ 63

Bores Ø

PX..AQM

Type



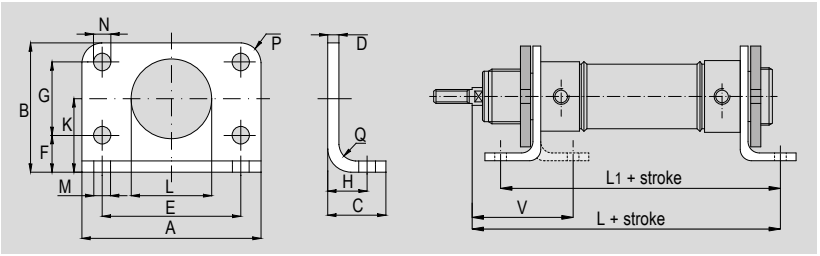

Technical data

Type	Description	Material
PX..AQM	Mounting for round cylinders type RDX, RDMX, RDMAX. Foot-flange. For front or rear mounting (head nut type GHX..AQM required, see page 5.73.2. One head nut supplied with cylinders as standard). Supplied individually.	Stainless Steel AISI 304

Dimensions

For cylinder Ø mm	Code	Item	A	B	C	D	E	F	G	H	K	ØL	ØM	ØN	P	Q	V	L	L_1
32	040119	PX032AQM	66	49	21	4	52	14	28	14	28	30	7	7	7	4	48	148	124
40	040120	PX040AQM	80	58	30	5	60	18	30	20	33	38	9	9	10	5	60	153	153
50	040137	PX050AQM	90	70	30	6	70	20	40	20	40	45	9	9	10	6	64	160	160
63	040138	PX063AQM	96	80	30	6	76	20	50	20	45	45	9	9	10	6	65	164	164

Stainless Steel mounting accessories for cylinders

Stainless Steel mountings for round cylinders type RDX, RDMX, RDMAX

Main features

32 ÷ 63

Bores Ø

SECX..AQM

Type



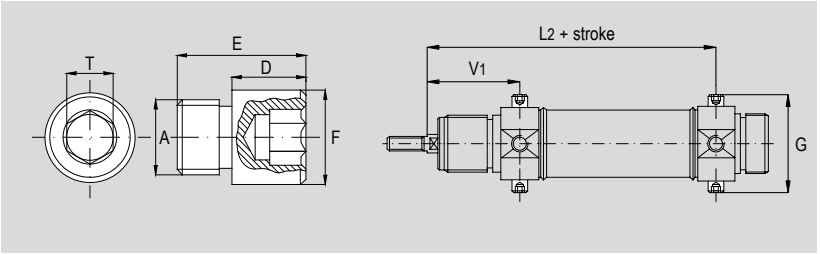

Technical data

Type	Description	Material
SECX..AQM	Mounting for round cylinders type RDX, RDMX, RDMAX. Pin. For front or rear mounting. Kit composed by two pins.	Stainless Steel AISI 304

Dimensions

For cylinder Ø mm	Code	Item	A	D	E	F	T	G	V_1	L_2
32	040174	SECX032AQM	M8x1	8	14	Ø 10	5	51	47	125
40	040175	SECX040AQM	M10x1	9,5	16,5	Ø 12	6	61	57	146
50	040176	SECX050AQM	M12x1,5	11	20	Ø 14	6	75	62	158
63	040177	SECX063AQM	M14x1,5	13	28	Ø 16	8	92	63	161

Main features

32 ÷ 63

Bores Ø

GHX..AQM

Type



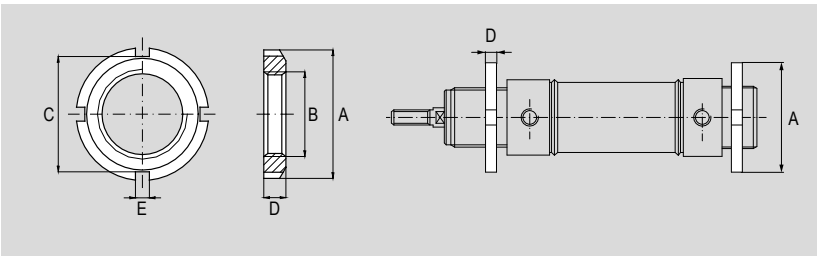

Technical data

Type	Description	Material
GHX..AQM	Mounting for round cylinders type RDX, RDMX, RDMAX. Head nut. For front or rear mounting. Supplied individually.	Stainless Steel AISI 304

Dimensions

For cylinder Ø mm	Code	Item	A	B	C	D	E
32	040069	GHX032AQM	Ø 45	M30x1,5	40	7	5
40	040187	GHX040AQM	Ø 50	M38x1,5	46	8	5
50-63	040188	GHX050/063AQM	Ø 58	M45x1,5	52	9	6

Main features

32 ÷ 63 — Bores Ø

ISO MP2

CFX..AQIS — Type



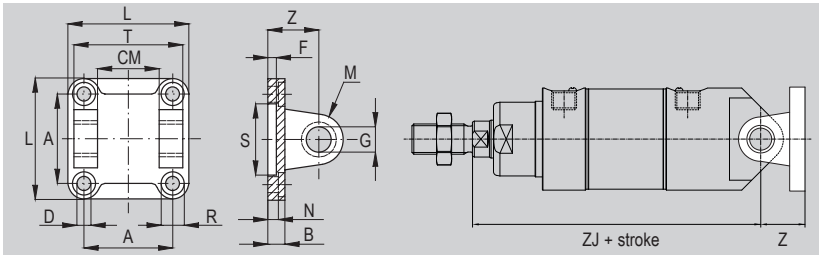

Technical data

Type	Description	Material
CFX..AQIS	Mounting for round cylinders type RXDCM. Rear clevis for mounting with rear eye integrated in the rear end caps of the cylinder. Pin type SECX..AQIS to be ordered separately, see page 5.75.5; Screws to be ordered separately, see page 5.79.1	Stainless Steel AISI 304

Dimensions

For cylinder Ø mm	Code	Item	A	L	D	R	N	B	S	F	Z	G	M	CM	T	ZJ	Weight (g)
32	040012	CFX032AQIS	32,5	45	6,6	11	5,5	10	30	5	22	10	10	26	45	142	-
40	040830	CFX040AQIS	38	55	6,6	11	5,5	10	35	5	25	12	12	28	52	160	-
50	040801	CFX050AQIS	46,5	65	9	15	6,5	10	40	5	27	12	12	32	60	170	-
63	040014	CFX063AQIS	56,5	75	9	15	6,5	12	45	5	32	16	16	40	70	190	-

Main features

32 ÷ 63 — Bores Ø

ISO AB6

CFSX..AQIS — Type



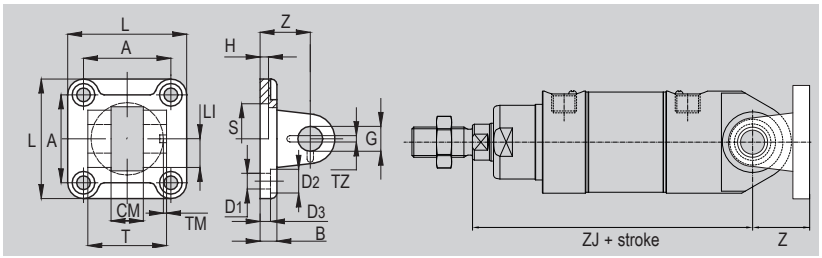

Technical data

Type	Description	Material
CFSX..AQIS	Mounting for round cylinders type RXDCS. Narrow rear clevis for mounting with narrow rear eye (with DIN 648K spherical bearing) integrated in the rear end caps of the cylinder. Anti-rotating pin type SECX..ARAQIS to be ordered separately, see page 5.75.5; Screws to be ordered separately, see page 5.79.1	Stainless Steel AISI 316

Dimensions

For cylinder Ø mm	Code	Item	L	T	CM	A	Z	H	B	D_3	S	G	D_1	D_2	TM	TZ	LI	ZJ	Weight (g)
32	040821	CFSX032AQIS	45	34	14	32,5	22	5	10	5,5	30	10	6,6	11	3	3,3	11,5	142	-
40	040822	CFSX040AQIS	55	40	16	38	25	5	10	5,5	35	12	6,6	11	4	4,3	12	160	-
50	040823	CFSX050AQIS	65	45	21	46,5	27	5	10	6,5	40	16	9	15	4	4,3	14	170	-
63	040824	CFSX063AQIS	75	51	21	56,5	32	5	12	6,5	45	16	9	15	4	4,3	14	190	-

Main features

32 ÷ 63 ISO CMSX..AQIS

Bores Ø | AB6 | Type



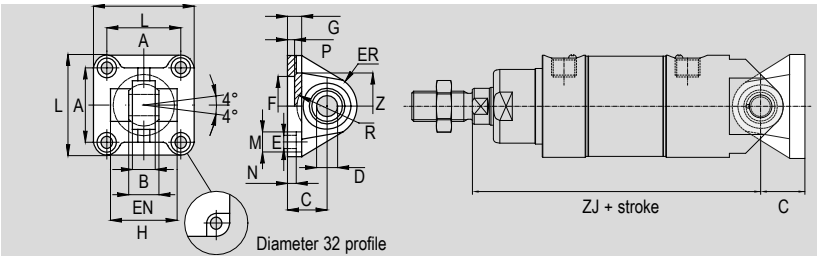

Technical data

Type	Description	Material
CMSX..AQIS	Mounting for round cylinders type RXDCF. Narrow rear eye with DIN 648K spherical bearing for mounting with narrow rear clevis integrated in the rear end caps of the cylinder. Anti-rotating pin type SECX..ARAQIS to be ordered separately, see page 5.75.5; Screws to be ordered separately, see page 5.79.1	Stainless Steel AISI 316

Dimensions

For cylinder Ø mm	Code	Item	A	B	C	D	EN	ER	F	G	E	L	M	N	P	H	R	ZJ	Weight (g)
32	040834	CMSX032AQIS	32,5	10,5	22	10	14	15	30	10	6,6	45	10,5	5,5	5	-	-	142	-
40	040835	CMSX040AQIS	38	12	25	12	16	18	35	10	6,6	55	11	5,5	5	-	-	160	-
50	040836	CMSX050AQIS	46,5	15	27	16	21	20	40	10	9	65	15	6,5	5	51	19	170	-
63	040010	CMSX063AQIS	56,5	15	32	16	21	23	45	12	9	75	15	6,5	5	-	-	190	-

Main features

32 ÷ 63 ISO ASSX..AQIS

Bores Ø | CS7 | Type



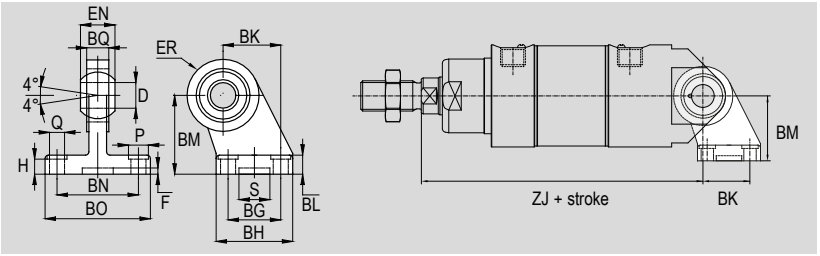

Technical data

Type	Description	Material
ASSX..AQIS	Mounting for round cylinders type RXDCF. Rear 90° hinge with DIN 648K spherical bearing for mounting with narrow rear clevis integrated in the rear end caps of the cylinder. Anti-rotating pin type SECX..ARAQIS to be ordered separately, see page 5.75.5; Screws to be ordered separately, see page 5.79.1	Stainless Steel AISI 316

Dimensions

For cylinder Ø mm	Code	Item	Q	P	BG	BH	BK	BL	BM	BN	BO	EN	ER	BQ	D	H	S	F	ZJ	Weight (g)
32	040850	ASSX032AQIS	6,6	11	18	31	21	10	32	38	51	14	15	10,5	10	8,5	20	3	142	-
40	040851	ASSX040AQIS	6,6	11	22	35	24	10	36	41	54	16	18	12	12	8,5	20	3	160	-
50	040852	ASSX050AQS	9	15	30	45	33	12	45	50	65	21	20	15	16	10,5	20	3	170	-
63	040853	ASSX063AQIS	9	15	35	50	37	12	50	52	67	21	23	15	16	10,5	20	3	190	-

Stainless Steel mounting accessories for cylinders

Stainless Steel mountings for round cylinders series RXD

Main features

32 ÷ 63

Bores Ø

PX..AQM

Type



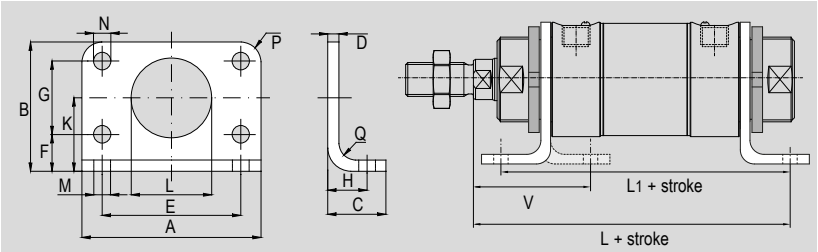

Technical data

Type	Description	Material
PX..AQM	Mounting for round cylinders type RXDVA and RDXVD. Foot-flange. For front or rear mounting (head nut type GHX..AQM required, see page 5.73.52. One head nut supplied with cylinders as standard). Supplied individually.	Stainless Steel AISI 304

Dimensions

For cylinder Ø mm	Code	Item	A	B	C	D	E	F	G	H	K	ØL	ØM	ØN	P	Q	V	L	L_1
32	040119	PX032AQM	66	49	21	4	52	14	28	14	28	30	7	7	7	4	-	-	-
40	040120	PX040AQM	80	58	30	5	60	18	30	20	33	38	9	9	10	5	-	-	-
50	040137	PX050AQM	90	70	30	6	70	20	40	20	40	45	9	9	10	6	-	-	-
63	040138	PX063AQM	96	80	30	6	76	20	50	20	45	45	9	9	10	6	-	-	-

Main features

32 ÷ 63

Bores Ø

GHX..AQM

Type



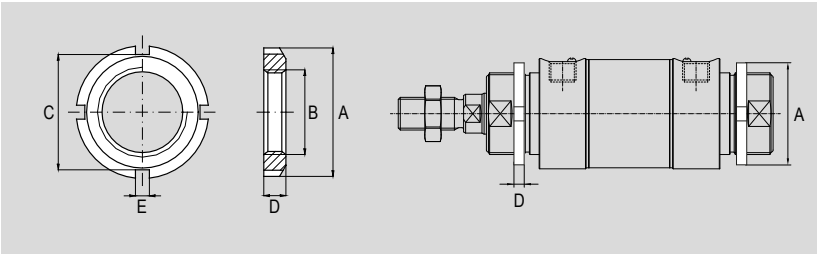

Technical data

Type	Description	Material
GHX..AQM	Mounting for round cylinders type RXDVA and RDXVD. Head nut. For front or rear mounting . Supplied individually.	Stainless Steel AISI 304

Dimensions

For cylinder Ø mm	Code	Item	A	B	C	D	E
32	040069	GHX032AQM	Ø 45	M30x1,5	40	7	5
40	040187	GHX040AQM	Ø 50	M38x1,5	46	8	5
50-63	040188	GHX050/063AQM	Ø 58	M45x1,5	52	9	6

Notes

Stainless Steel mounting accessories for cylinders

Stainless Steel mountings for cylinders ISO 15552

Main features

32 ÷ 200 ISO CFX..AQIS

Bores Ø MP2 Type



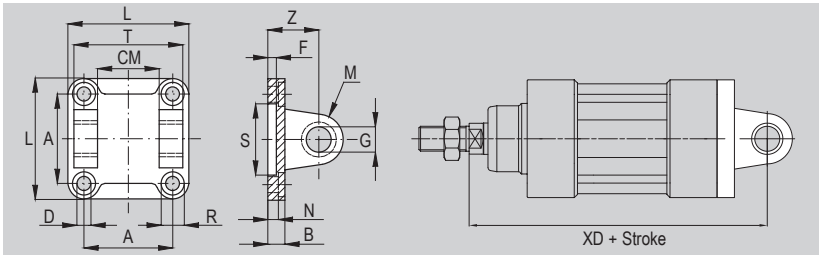

Technical data

Type	Description	Material
CFX..AQIS	Mounting for cylinders. Rear clevis. For rear mounting. Pin type SECX..AQIS to be ordered separately, see page 5.75.5; Screws to be ordered separately, see page 5.79.1	Stainless Steel AISI 304

Dimensions

For cylinder Ø mm	Code	Item	A	L	D	R	N	B	S	F	Z	G	M	CM	T	XD	Weight (g)
32	040012	CFX032AQIS	32,5	45	6,6	11	5,5	10	30	5	22	10	10	26	45	142	-
40	040830	CFX040AQIS	38	55	6,6	11	5,5	10	35	5	25	12	12	28	52	160	-
50	040801	CFX050AQIS	46,5	65	9	15	6,5	10	40	5	27	12	12	32	60	170	-
63	040014	CFX063AQIS	56,5	75	9	15	6,5	12	45	5	32	16	16	40	70	190	-
80	040013	CFX080AQIS	72	95	11	18	10	14	45	5	36	16	16	50	90	210	-
100	040838	CFX100AQIS	89	115	11	18	10	16	55	5	41	20	20	60	110	230	-
125	040005	CFX125AQIS	110	140	13,5	20	10	20	60	7	50	25	25	70	130	275	-
160	040797	CFX160AQIS	140	180	18	26	10	20	65	7	55	30	25	90	170	315	-
200	040798	CFX200AQIS	175	220	18	26	11	20	75	7	60	30	25	90	170	335	-

Main features

32 ÷ 125 ISO CFSX..AQIS

Bores Ø AB6 Type



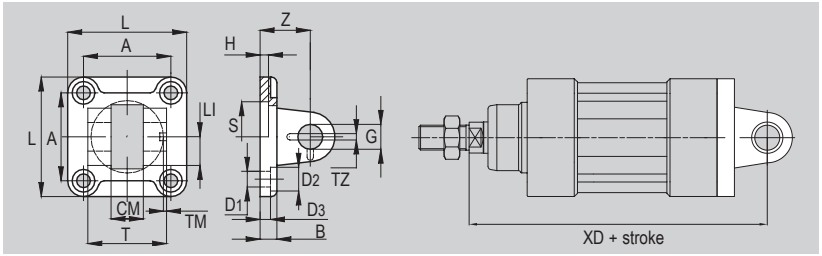

Technical data

Type	Description	Material
CFSX..AQIS	Mounting for cylinders. Narrow rear clevis (for DIN 648K spherical bearing). For rear mounting. Anti-rotating pin type SECX..ARAQIS to be ordered separately, see page 5.75.5; Screws to be ordered separately, see page 5.79.1	Stainless Steel AISI 316

Dimensions

For cylinder Ø mm	Code	Item	L	T	CM	A	Z	H	B	D_3	S	G	D_1	D_2	TM	TZ	LI	XD	Weight (g)
32	040821	CFSX032AQIS	45	34	14	32,5	22	5	10	5,5	30	10	6,6	11	3	3,3	11,5	142	-
40	040822	CFSX040AQIS	55	40	16	38	25	5	10	5,5	35	12	6,6	11	4	4,3	12	160	-
50	040823	CFSX050AQIS	65	45	21	46,5	27	5	10	6,5	40	16	9	15	4	4,3	14	170	-
63	040824	CFSX063AQIS	75	51	21	56,5	32	5	12	6,5	45	16	9	15	4	4,3	14	190	-
80	040825	CFSX080AQIS	95	65	25	72	36	5	16	10	45	20	11	18	4	4,3	16	210	-
100	040826	CFSX100AQIS	115	75	25	89	41	5	16	10	55	20	11	18	4	6,3	16	230	-
125	040833	CFSX125AQIS	140	97	37	110	50	7	20	10	60	30	13,5	20	6	6,3	24	275	-

Main features

32 ÷ 200 ISO CMX..AQIS

Bores Ø MP4 Type



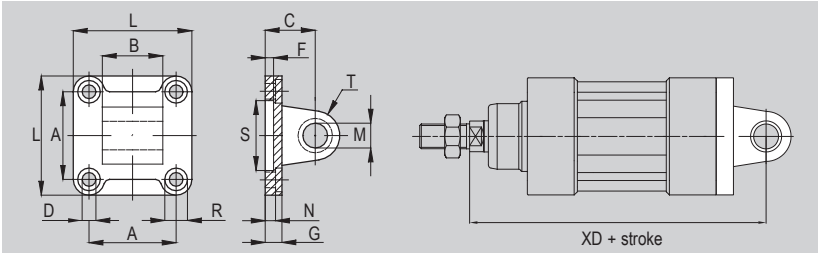

Technical data

Type	Description	Material
CMX..AQIS	Mounting for cylinders. Rear eye. For rear mounting. Screws to be ordered separately, see page 5.79.1	Stainless Steel AISI 304

Dimensions

For cylinder Ø mm	Code	Item	A	L	D	R	N	G	S	F	C	M	T	B		XD	Weight (g)
32	040805	CMX032AQIS	32,5	45	6,6	11	5,5	10	30	5	22	10	10	26		142	-
40	040806	CMX040AQIS	38	55	6,6	11	5,5	10	35	5	25	12	12	28		160	-
50	040802	CMX050AQIS	46,5	65	9	15	6,5	10	40	5	27	12	12	32	-0,2	170	-
63	040808	CMX063AQIS	56,5	75	9	15	6,5	12	45	5	32	16	16	40	-0,6	190	-
80	040016	CMX080AQIS	72	95	11	18	10	14	45	5	36	16	16	50		210	-
100	040799	CMX100AQIS	89	115	11	18	10	16	55	5	41	20	20	60		230	-
125	040008	CMX125AQIS	110	140	14	20	10	20	60	7	50	25	25	70		275	-
160	040800	CMX160AQIS	140	180	18	26	10	20	65	7	55	30	25	90	-0,5 -1,2	315	-
200	040804	CMX200AQIS	175	220	18	26	11	20	75	7	60	30	25	90		335	-

Main features

32 ÷ 125 ISO CMSX..AQIS

Bores Ø MP6 Type



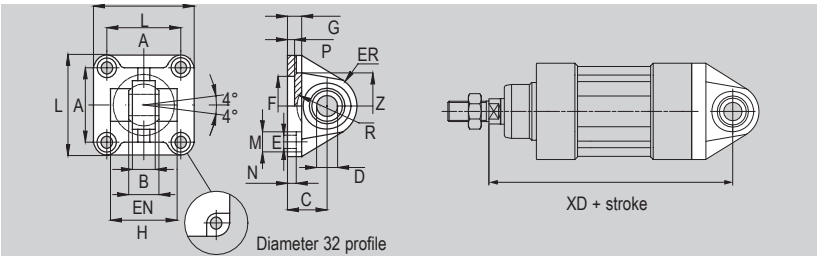

Technical data

Type	Description	Material
CMSX..AQIS	Mounting for cylinders. Narrow rear eye with DIN 648K spherical bearing. For rear mounting.. Screws to be ordered separately, see page 5.79.1	Stainless Steel AISI 316

Dimensions

For cylinder Ø mm	Code	Item	A	B	C	D	EN	ER	F	G	E	L	M	N	P	H	R	XD	Weight (g)
32	040834	CMSX032AQIS	32,5	10,5	22	10	14	15	30	10	6,6	45	10,5	5,5	5	-	-	142	-
40	040835	CMSX040AQIS	38	12	25	12	16	18	35	10	6,6	55	11	5,5	5	-	-	160	-
50	040836	CMSX050AQIS	46,5	15	27	16	21	20	40	10	9	65	15	6,5	5	51	19	170	-
63	040010	CMSX063AQIS	56,5	15	32	16	21	23	45	12	9	75	15	6,5	5	-	-	190	-
80	040837	CMSX080AQIS	72	18	36	20	25	27	45	14	11	95	18	10	5	-	-	210	-
100	040848	CMSX100AQIS	89	18	41	20	25	30	55	16	11	115	18	10	5	-	-	230	-
125	040849	CMSX125AQIS	110	26	50	30	37	40	60	20	13,5	140	20	10	7	-	-	275	-

Stainless Steel mounting accessories for cylinders

Stainless Steel mountings for cylinders ISO 15552

Main features

32 ÷ 125 ISO **ASVX..AQIS**

Bores Ø AB7 Type

cetop RP 107P



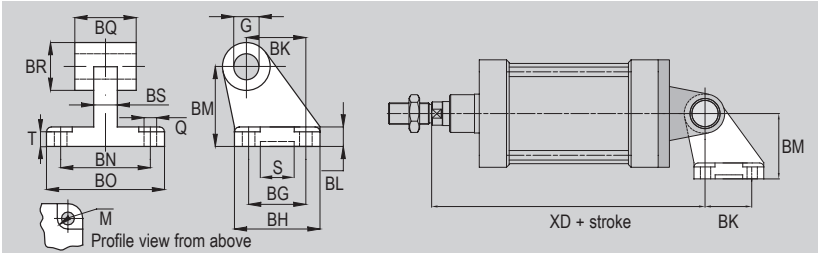

Technical data

Type	Description	Material
ASVX..AQIS	Mounting for cylinders. Rear 90° hinge for mounting with rear clevis type CFX. Screws to be ordered separately, see page 5.79.1	Stainless Steel AISI 304

Dimensions

For cylinder Ø mm	Code	Item	Q	M	BG	BH	BK	BL	BM	BN	BO	BS	BR	BQ	G	T	S	XD	Weight (g)
32	040809	ASVX032AQIS	6,6	11	18	31	21	8	32	38	51	10	20	26	10	1,6	20	142	-
40	040810	ASVX040AQIS	6,6	11	22	35	24	10	36	41	54	10	22	28	12	1,6	20	160	-
50	040812	ASVX050AQIS	9	15	30	45	33	12	45	50	65	14	26	32	12	1,6	20	170	-
63	040813	ASVX063AQIS	9	15	35	50	37	12	50	52	67	14	30	40	16	1,6	20	190	-
80	040814	ASVX080AQIS	11	18	40	60	47	14	63	66	86	18	30	50	16	2,5	20	210	-
100	040815	ASVX100AQIS	11	18	50	70	55	15	71	76	96	20	36	60	20	2,5	20	230	-
125	040816	ASVX125AQIS	14	20	60	90	70	20	90	94	124	30	45	70	25	3,2	-	275	-

Main features

32 ÷ 125 ISO **ASSX..AQIS**

Bores Ø CS7 Type



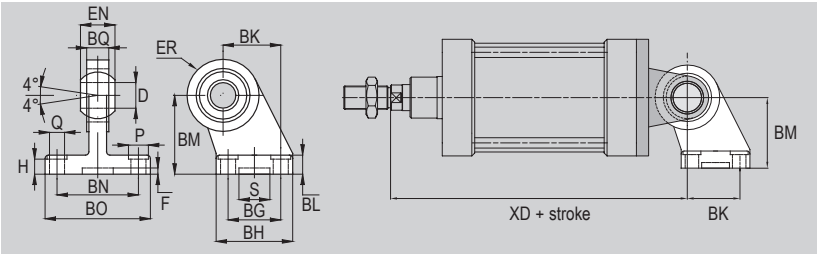

Technical data

Type	Description	Material
ASSX..AQIS	Mounting for cylinders. Rear 90° hinge with DIN 648K spherical bearing for mounting with narrow rear clevis type CFSX. Screws to be ordered separately, see page 5.79.1	Stainless Steel AISI 316

Dimensions

For cylinder Ø mm	Code	Item	Q	P	BG	BH	BK	BL	BM	BN	BO	EN	ER	BQ	D	H	S	F	XD	Weight (g)
32	040850	ASSX032AQIS	6,6	11	18	31	21	10	32	38	51	14	15	10,5	10	8,5	20	3	142	-
40	040851	ASSX040AQIS	6,6	11	22	35	24	10	36	41	54	16	18	12	12	8,5	20	3	160	-
50	040852	ASSX050AQS	9	15	30	45	33	12	45	50	65	21	20	15	16	10,5	20	3	170	-
63	040853	ASSX063AQIS	9	15	35	50	37	12	50	52	67	21	23	15	16	10,5	20	3	190	-
80	040854	ASSX080AQIS	11	18	40	60	47	14	63	66	86	25	27	18	20	11,5	20	3	210	-
100	040855	ASSX100AQIS	11	18	50	70	55	15	71	76	96	25	30	18	20	12,5	20	3	230	-
125	040856	ASSX125AQIS	13,5	20	60	90	70	20	90	94	124	37	40	25	30	17	20	3	275	-

Main features

32 ÷ 200 ISO FLVX..AQIS

Bores Ø | VDMA MF1/MF2 | Type



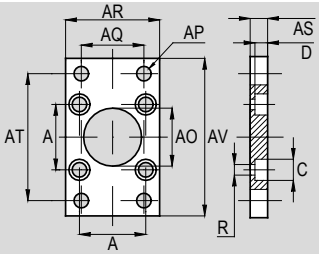

Technical data

Type	Description	Material
FLVX..AQIS	Mounting for cylinders. Flange. For front or rear mounting. Screws series VBTRX to be ordered separately, see page 5.79.1	Stainless Steel AISI 304

Dimensions

For cylinder Ø mm	Code	Item	A	AP Ø	AO	R	AS	AR	AQ	AT	AV	C	D	ZF	W	Weight (g)
32	040864	FLVX032AQIS	32,5	7	30	6,5	10	45	32	64	80	10,5	5	130	16	-
40	040865	FLVX040AQIS	38	9	35	6,5	10	52	36	72	90	11	5	145	20	-
50	040840	FLVX050AQIS	46,5	9	40	9	12	65	45	90	110	15	5,5	155	25	-
63	040866	FLVX063AQIS	56,5	9	45	9	12	75	50	100	120	15	5,5	170	25	-
80	040867	FLVX080AQIS	72	12	45	11	16	95	63	126	150	18	8	190	30	-
100	040868	FLVX100AQIS	89	14	55	11	16	115	75	150	170	18	8	205	35	-
125	040869	FLVX125AQIS	110	16	60	13,5	20	140	90	180	205	20	9,5	245	45	-
160	040870	FLVX160AQIS	140	18	65	18	20	180	115	230	260	26	10,5	285	55	-
200	040871	FLVX200AQIS	175	22	75	18	25	220	135	270	300	26	12,5	300	70	-

Main features

32 ÷ 200 ISO PBX..AQIS

Bores Ø | MS1 | Type



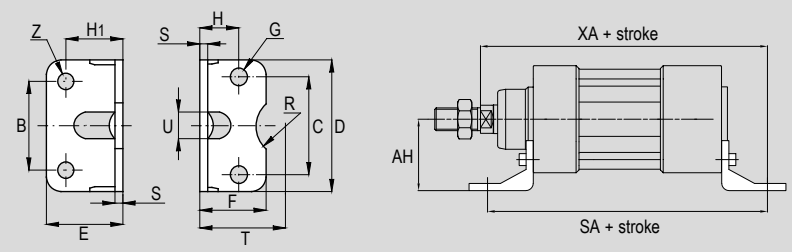

Technical data

Type	Description	Material
PBX..AQIS	Mounting for cylinders. Low foot. Supplied individually. For front or rear mounting. Screws to be ordered separately, see page 5.79.1	Stainless Steel AISI 304

Dimensions

For cylinder Ø mm	Code	Item	C	B	D	E	F	G	H	H_1	S	T	R	U	Z	AH	XA	SA	Weight (g)
32	040872	PBX032AQIS	32,5	32	45	35	30	7	15,75	24	4	32	15	11	7	32	144	142	-
40	040873	PBX040AQIS	38	36	52	36	30	7	17	28	4	36	17,5	15	9	36	163	161	-
50	040874	PBX050AQIS	46,5	45	65	47	36	9	21,75	32	5	45	20	16	9	45	175	170	-
63	040875	PBX063AQIS	56,5	50	75	45	35	9	21,75	32	5	50	22,5	18	9	50	190	185	-
80	040876	PBX080AQIS	72	63	95	55	47	11	27	41	6	63	22,5	17	12	63	215	210	-
100	040877	PBX100AQIS	89	75	115	57	53	11	26,5	41	6	71	27,5	24	14	71	230	220	-
125	040878	PBX125AQIS	110	90	140	70	70	14	35	45	8	90	30	-	16	90	270	250	-
160	040879	PBX160AQIS	140	115	180	75	100	18	45	60	9	115	32,5	-	18	115	305	300	-
200	040880	PBX200AQIS	175	135	220	100	100	18	47,5	70	12	135	37,5	-	22	135	322	320	-

Main features

32 ÷ 200 — Bores Ø

ISO AA4

SECX..AQIS — Type



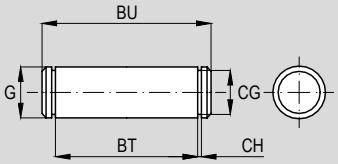

Technical data

Type	Description	Material
SECX..AQIS	Mounting for cylinders. Pin. For rear clevis ISO MP2. Supplied with two seeger.	Stainless Steel AISI 304

Dimensions

For cylinder Ø mm	Code	Item	G	BT	CG	CH	BU	Weight (g)
32	040829	SECX032AQIS	10	46	9,6	1,1	53	-
40	040831	SECX040AQIS	12	53	11,5	1,1	60	-
50	040811	SECX050AQIS	12	61	11,5	1,1	68	-
63	040832	SECX063AQIS	16	71	15,2	1,1	78	-
80	040015	SECX080AQIS	16	91	15,2	1,1	98	-
100	040839	SECX100AQIS	20	111	19	1,3	118	-
125	040818	SECX125AQIS	25	132	23,9	1,3	139	-
160	040819	SECX160AQIS	30	171,5	28,6	1,6	178	-
200	040820	SECX200AQIS	30	171,5	28,6	1,6	178	-

Main features

32 ÷ 125 — Bores Ø

ISO AA6

SECX..ARAQIS — Type



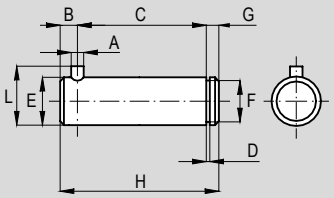

Technical data

Type	Description	Material
SECX..ARAQIS	Mounting for cylinders. Anti-rotating pin. For narrow rear clevis ISO AB6 with DIN 648 K spherical bearing. Supplied with one seeger.	Stainless Steel AISI 316

Dimensions

For cylinder Ø mm	Code	Item	A	C	D	E	F	G	H	L	B		Weight (g)
32	040857	SECX032ARAQIS	3	32,5	1,1	10	9,6	4	41	14	4,5		26
40	040858	SECX040ARAQIS	4	38	1,1	12	11,5	4	48	16	6		42
50	040859	SECX050ARAQIS	4	43	1,1	16	15,2	5	54	20	6	0	84
63	040860	SECX063ARAQIS	4	49	101	16	15,2	5	60	20	6	-1	94
80	040861	SECX080ARAQIS	4	63	1,3	20	19	6	75	24	6		184
100	040862	SECX100ARAQIS	4	73	1,3	20	19	6	85	24	6		208
125	040863	SECX125ARAQIS	6	94	1,6	30	28,6	7	110	36	9	0 -2	1365

Main features

32 ÷ 200 ISO CTX..AQIS

Bores Ø MT4 Type



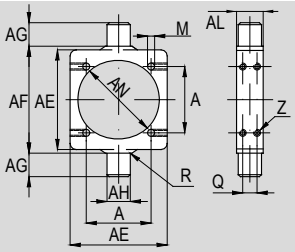

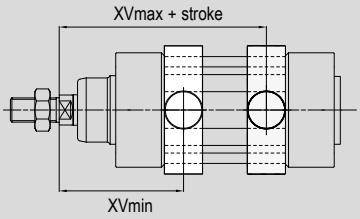

Technical data

Type	Description	Material
CTX..AQIS	Mounting for cylinders. Adjustable center trunnion (tie-rods). For trunnion mounted on the cylinder, please order togheter with the cylinder. Grains to be ordered separately, see page 5.79.1	Stainless Steel AISI 304

Dimensions

For cylinder Ø mm	Code	Item	A	AE	AL	AH e9	AG h14	AF h14	AN	R	M	Q	Z	XVmin	XVmax	Weight (g)
32	040881	CTX032AQIS	32,5	46	15	12	12	50	37	1	6,25	7	M5	60	86	-
40	040882	CTX040AQIS	38	59	20	16	16	63	46	1,5	6,25	8	M5	69	96	-
50	040883	CTX050AQIS	46,5	69	20	16	16	75	56	1,6	8,25	8	M6	78	102	-
63	040884	CTX063AQIS	56,5	84	25	20	20	90	69	1,6	8,25	12	M6	82	113	-
80	040885	CTX080AQIS	72	102	25	20	20	110	87	1,6	10,25	12	M8	97	123	-
100	040550	CTX100AQIS	89	125	30	25	25	132	107	2	10,25	15	M8	107	133	-
125	040886	CTX125AQIS	110	155	32	25	25	160	134	2	12,25	15	M10	126,5	163,5	-
160	040887	CTX160AQIS	140	190	40	32	32	200	171	2,5	16,25	18	M12	150	190	-
200	040888	CTX200AQIS	175	240	40	32	32	250	214	2,5	16,25	18	M12	165	205	-

Stainless Steel mounting accessories for cylinders

Stainless Steel mountings for compact cylinders ISO 21287

Main features

32 ÷ 100 ISO CFX..AQIS

Bores Ø MP2 Type



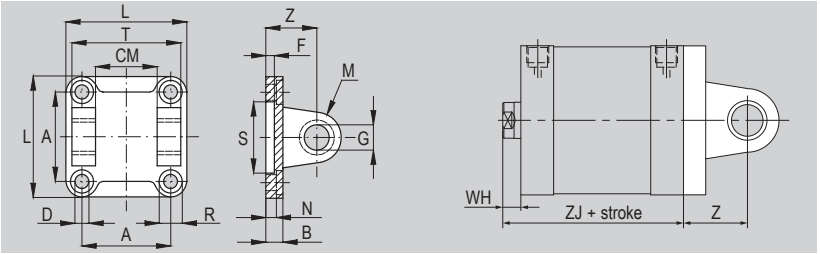

Technical data

Type	Description	Material
CFX..AQIS	Mounting for cylinders. Rear clevis. For rear mounting. Pin type SECX..AQIS to be ordered separately, see page 5.75.5; Screws to be ordered separately, see page 5.79.1	Stainless Steel AISI 304

Dimensions

For cylinder Ø mm	Code	Item	A	L	D	R	N	B	S	F	Z	G	M	CM	T	WH	ZJ	Weight (g)
32	040012	CFX032AQIS	32,5	45	6,6	11	5,5	10	30	5	22	10	10	26	45	7	51	-
40	040830	CFX040AQIS	38	55	6,6	11	5,5	10	35	5	25	12	12	28	52	7	52	-
50	040801	CFX050AQIS	46,5	65	9	15	6,5	10	40	5	27	12	12	32	60	8	53	-
63	040014	CFX063AQIS	56,5	75	9	15	6,5	12	45	5	32	16	16	40	70	8	57	-
80	040013	CFX080AQIS	72	95	11	18	10	14	45	5	36	16	16	50	90	10	64	-
100	040838	CFX100AQIS	89	115	11	18	10	16	55	5	41	20	20	60	110	10	77	-

Main features

32 ÷ 100 ISO CFSX..AQIS

Bores Ø AB6 Type



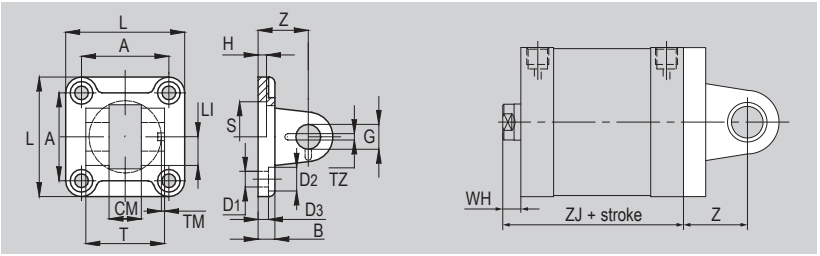

Technical data

Type	Description	Material
CFSX..AQIS	Mounting for cylinders. Narrow rear clevis (for DIN 648K spherical bearing). For rear mounting. Anti-rotating pin type SECX..ARAQIS to be ordered separately, see page 5.75.5; Screws to be ordered separately, see page 5.79.1	Stainless Steel AISI 316

Dimensions

For cylinder Ø mm	Code	Item	L	T	CM	A	Z	H	B	D_3	S	G	D_1	D_2	TM	TZ	LI	WH	ZJ	Weight (g)
32	040821	CFSX032AQIS	45	34	14	32,5	22	5	10	5,5	30	10	6,6	11	3	3,3	11,5	7	51	-
40	040822	CFSX040AQIS	55	40	16	38	25	5	10	5,5	35	12	6,6	11	4	4,3	12	7	52	-
50	040823	CFSX050AQIS	65	45	21	46,5	27	5	10	6,5	40	16	9	15	4	4,3	14	8	53	-
63	040824	CFSX063AQIS	75	51	21	56,5	32	5	12	6,5	45	16	9	15	4	4,3	14	8	57	-
80	040825	CFSX080AQIS	95	65	25	72	36	5	16	10	45	20	11	18	4	4,3	16	10	64	-
100	040826	CFSX100AQIS	115	75	25	89	41	5	16	10	55	20	11	18	4	6,3	16	10	77	-

Main features

32 ÷ 100 ISO CMX..AQIS

Bores Ø MP4 Type



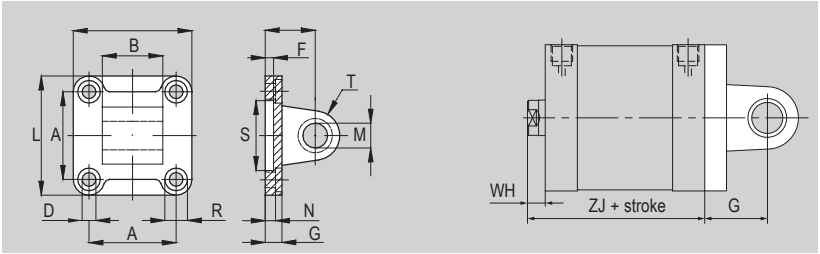

Technical data

Type	Description	Material
CMX..AQIS	Mounting for cylinders. Rear eye. For rear mounting. Screws to be ordered separately, see page 5.79.1	Stainless Steel AISI 304

Dimensions

For cylinder Ø mm	Code	Item	A	L	D	R	N	G	S	F	C	M	T	B		WH	ZJ	Weight (g)
32	040805	CMX032AQIS	32,5	45	6,6	11	5,5	10	30	5	22	10	10	26		7	51	-
40	040806	CMX040AQIS	38	55	6,6	11	5,5	10	35	5	25	12	12	28		7	52	-
50	040802	CMX050AQIS	46,5	65	9	15	6,5	10	40	5	27	12	12	32	-0,2	8	53	-
63	040808	CMX063AQIS	56,5	75	9	15	6,5	12	45	5	32	16	16	40	-0,6	8	57	-
80	040016	CMX080AQIS	72	95	11	18	10	14	45	5	36	16	16	50		10	64	-
100	040799	CMX100AQIS	89	115	11	18	10	16	55	5	41	20	20	60		10	77	-

Main features

32 ÷ 100 ISO CMSX..AQIS

Bores Ø MP6 Type



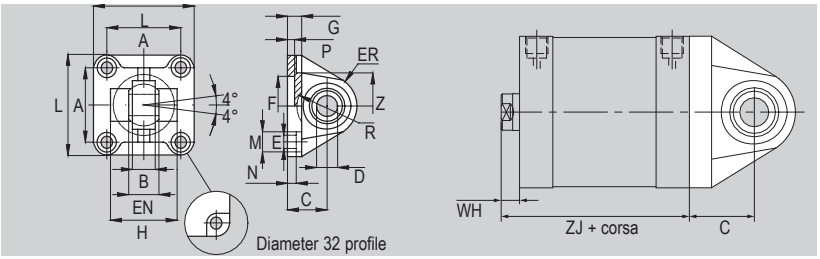

Technical data

Type	Description	Material
CMSX..AQIS	Mounting for cylinders. Narrow rear eye with DIN 648K spherical bearing. For rear mounting.. Screws to be ordered separately, see page 5.79.1	Stainless Steel AISI 316

Dimensions

For cylinder Ø mm	Code	Item	A	B	C	D	EN	ER	F	G	E	L	M	N	P	H	R	WH	ZJ	Weight (g)
32	040834	CMSX032AQIS	32,5	10,5	22	10	14	15	30	10	6,6	45	10,5	5,5	5	-	-	7	51	-
40	040835	CMSX040AQIS	38	12	25	12	16	18	35	10	6,6	55	11	5,5	5	-	-	7	52	-
50	040836	CMSX050AQIS	46,5	15	27	16	21	20	40	10	9	65	15	6,5	5	51	19	8	53	-
63	040010	CMSX063AQIS	56,5	15	32	16	21	23	45	12	9	75	15	6,5	5	-	-	8	57	-
80	040837	CMSX080AQIS	72	18	36	20	25	27	45	14	11	95	18	10	5	-	-	10	64	-
100	040848	CMSX100AQIS	89	18	41	20	25	30	55	16	11	115	18	10	5	-	-	10	77	-

Stainless Steel mounting accessories for cylinders

Stainless Steel mountings for compact cylinders ISO 21287

Main features

32 ÷ 100 ISO ASVX..AQIS

Bores Ø AB7 Type

cetop RP 107P



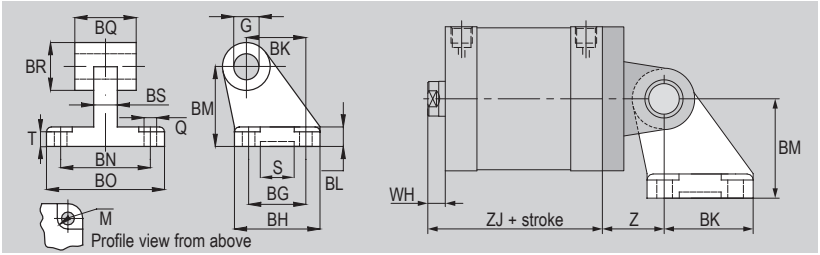

Technical data

Type	Description	Material
ASVX..AQIS	Mounting for cylinders. Rear 90° hinge for mounting with rear clevis type CFX. Screws to be ordered separately, see page 5.79.1	Stainless Steel AISI 304

Dimensions

For cylinder Ø mm	Code	Item	Q	M	BG	BH	BK	BL	BM	BN	BO	BS	BR	BQ	G	T	S	Z	WH	ZJ	Weight (g)
32	040809	ASVX032AQIS	6,6	11	18	31	21	8	32	38	51	10	20	26	10	1,6	20	22	7	51	-
40	040810	ASVX040AQIS	6,6	11	22	35	24	10	36	41	54	10	22	28	12	1,6	20	25	7	52	-
50	040812	ASVX050AQIS	9	15	30	45	33	12	45	50	65	14	26	32	12	1,6	20	27	8	53	-
63	040813	ASVX063AQIS	9	15	35	50	37	12	50	52	67	14	30	40	16	1,6	20	32	8	57	-
80	040814	ASVX080AQIS	11	18	40	60	47	14	63	66	86	18	30	50	16	2,5	20	36	10	64	-
100	040815	ASVX100AQIS	11	18	50	70	55	15	71	76	96	20	36	60	20	2,5	20	41	10	77	-

Main features

32 ÷ 100 ISO ASSX..AQIS

Bores Ø CS7 Type



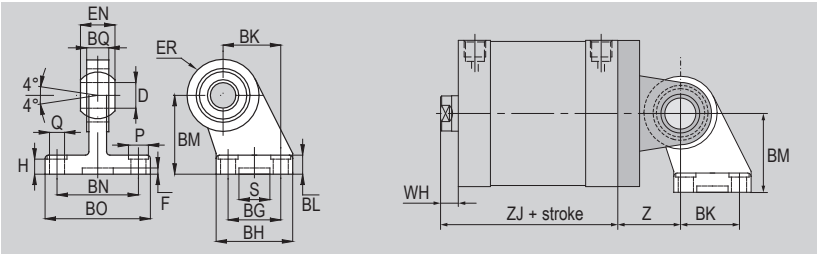

Technical data

Type	Description	Material
ASSX..AQIS	Mounting for cylinders. Rear 90° hinge with DIN 648K spherical bearing for mounting with narrow rear clevis type CFSX. Screws to be ordered separately, see page 5.79.1	Stainless Steel AISI 316

Dimensions

For cylinder Ø mm	Code	Item	Q	P	BG	BH	BK	BL	BM	BN	BO	EN	ER	BQ	D	H	S	F	Z	WH	ZJ	Weight (g)
32	040850	ASSX032AQIS	6,6	11	18	31	21	10	32	38	51	14	15	10,5	10	8,5	20	3	22	7	51	-
40	040851	ASSX040AQIS	6,6	11	22	35	24	10	36	41	54	16	18	12	12	8,5	20	3	25	7	52	-
50	040852	ASSX050AQS	9	15	30	45	33	12	45	50	65	21	20	15	16	10,5	20	3	27	8	53	-
63	040853	ASSX063AQIS	9	15	35	50	37	12	50	52	67	21	23	15	16	10,5	20	3	32	8	57	-
80	040854	ASSX080AQIS	11	18	40	60	47	14	63	66	86	25	27	18	20	11,5	20	3	36	10	64	-
100	040855	ASSX100AQIS	11	18	50	70	55	15	71	76	96	25	30	18	20	12,5	20	3	41	10	77	-

Main features

32 ÷ 100 ISO **FLVX..AQIS**

Bores Ø — VDMA — Type

MF1/MF2



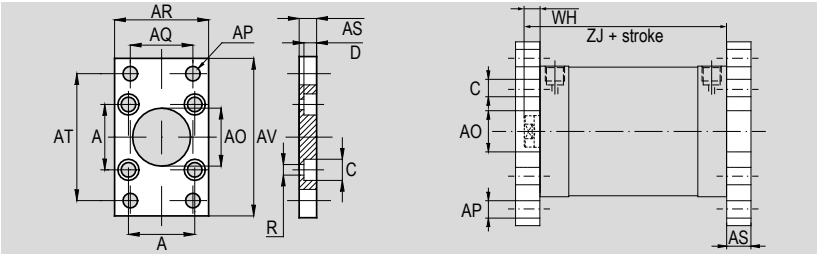

Technical data

Type	Description	Material
FLVX..AQIS	Mounting for cylinders. Flange. For front or rear mounting. Screws series VBTRX to be ordered separately, see page 5.79.1	Stainless Steel AISI 304

Dimensions

For cylinder Ø mm	Code	Item	A	AP Ø	AO	R	AS	AR	AQ	AT	AV	C	D	WH	ZJ	Weight (g)
32	040864	FLVX032AQIS	32,5	7	30	6,5	10	45	32	64	80	10,5	5	7	51	-
40	040865	FLVX040AQIS	38	9	35	6,5	10	52	36	72	90	11	5	7	52	-
50	040840	FLVX050AQIS	46,5	9	40	9	12	65	45	90	110	15	5,5	8	53	-
63	040866	FLVX063AQIS	56,5	9	45	9	12	75	50	100	120	15	5,5	8	57	-
80	040867	FLVX080AQIS	72	12	45	11	16	95	63	126	150	18	8	10	64	-
100	040868	FLVX100AQIS	89	14	55	11	16	115	75	150	170	18	8	10	77	-

Main features

32 ÷ 100 ISO **PBX..AQIS**

Bores Ø — MS1 — Type



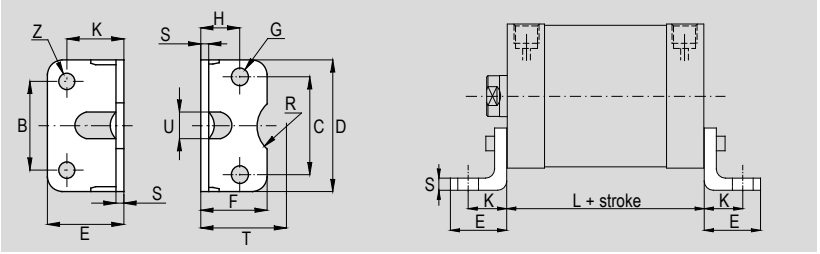

Technical data

Type	Description	Material
PBX..AQIS	Mounting for cylinders. Low foot. Supplied individually. For front or rear mounting. Screws to be ordered separately, see page 5.79.1	Stainless Steel AISI 304

Dimensions

For cylinder Ø mm	Code	Item	C	B	D	E	F	G	H	K	S	T	R	U	Z	L	Weight (g)
32	040872	PBX032AQIS	32,5	32	45	35	30	7	15,75	24	4	32	15	11	7	44	-
40	040873	PBX040AQIS	38	36	52	36	30	7	17	28	4	36	17,5	15	9	45	-
50	040874	PBX050AQIS	46,5	45	65	47	36	9	21,75	32	5	45	20	16	9	45	-
63	040875	PBX063AQIS	56,5	50	75	45	35	9	21,75	32	5	50	22,5	18	9	49	-
80	040876	PBX080AQIS	72	63	95	55	47	11	27	41	6	63	22,5	17	12	54	-
100	040877	PBX100AQIS	89	75	115	57	53	11	26,5	41	6	71	27,5	24	14	67	-

Stainless Steel mounting accessories for cylinders

Stainless Steel mounting screws and grains for cylinders

Main features

32 ÷ 200 — Bores Ø

UNI 5931

VTCEIX — Type

Stainless Steel hexagon socket flat head screws, conforming to UNI 5931 standards, suitable for mounting accessory of cylinders ISO 15552 and compact cylinders ISO 21287.



32 ÷ 200 — Bores Ø

DIN 6912

VBTRX — Type

Stainless Steel flat head allen screw, conforming to DIN 6912 standards, suitable for mounting flanges for cylinders ISO 15552 and compact cylinders ISO 21287.



32 ÷ 200 — Bores Ø

UNI 5927

Stainless Steel grains conforming to UNI 5927 standards, suitable for mounting center trunnions for cylinders ISO 15552.



Technical data and matching stainless steel screws type VTCEIX, type VBTRX and grains

For cylinder Ø mm	Code	Item	Compliance	Matching with mounting accessories						
				CFX	CMX	CFSX	CMSX	FLVX	PBX	CTX
Ø 32	040787	VTCEIXM6x18	UNI5931	●	●	●	●	-	●	-
	040792	VBTRXM6x18	DIN6912	-	-	-	-	●	-	-
	885125	M5x5	UNI 5927	-	-	-	-	-	-	●
Ø 40	040787	VTCEIXM6x18	UNI5931	●	●	●	●	-	●	-
	040792	VBTRXM6x18	DIN6912	-	-	-	-	●	-	-
	885125	M5x5	UNI 5927	-	-	-	-	-	-	●
Ø 50	-	VTCEIXM8x16	UNI5931	-	-	-	-	-	●	-
	040788	VTCEIXM8x20	UNI5931	●	●	●	●	-	-	-
	040793	VBTRXM8x20	DIN6912	-	-	-	-	●	-	-
	885119	M6x10	UNI5927	-	-	-	-	-	-	●
Ø 63	-	VTCEIXM8x16	UNI5931	-	-	-	-	-	●	-
	040788	VTCEIXM8x20	UNI5931	●	●	●	●	-	-	-
	040793	VBTRXM8x20	DIN6912	-	-	-	-	●	-	-
	885119	M6x10	UNI5927	-	-	-	-	-	-	●
Ø 80	040789	VTCEIXM10x20	UNI5931	-	-	-	-	-	●	-
	881479	VTCEIXM10x25	UNI5931	●	●	●	●	-	-	-
	040794	VBTRXM10x20	DIN6912	-	-	-	-	●	-	-
	883534	M8x10	UNI5927	-	-	-	-	-	-	●
Ø 100	040789	VTCEIXM10x20	UNI5931	-	-	-	-	-	●	-
	881479	VTCEIXM10x25	UNI5931	●	●	●	●	-	-	-
	040794	VBTRXM10x20	DIN6912	-	-	-	-	●	-	-
	883534	M8x10	UNI5927	-	-	-	-	-	-	●
Ø 125	-	VTCEIXM12x25	UNI5931	-	-	-	-	-	●	-
	040705	VTCEIXM12x30	UNI5931	●	●	●	●	-	-	-
	-	VBTRXM12x30	DIN6912	-	-	-	-	●	-	-
	884990	M10x14	UNI5927	-	-	-	-	-	-	●
Ø 160	040791	VTCEIXM16x30	UNI5931	●	●	●	●	-	●	-
	040796	VBTRXM16x30	DIN6912	-	-	-	-	●	-	-
	885126	M12x20	UNI5927	-	-	-	-	-	-	●
Ø 200	040791	VTCEIXM16x30	UNI5931	●	●	●	●	-	●	-
	040796	VBTRXM16x30	DIN6912	-	-	-	-	●	-	-
	885126	M12x20	UNI5927	-	-	-	-	-	-	●

Key

● allowed matching; - not allowed matching.

Notes

STAINLESS STEEL

solenoid operated valves Series AX1



Find out our
key products

- **Solution for most applications**
- **Easy and intuitive choice**
- **Excellent value for money**
- **Wide availability**
- **Fast delivery**

Main features and certifications

Series of stainless steel spool valves, with in-line connections. Available in size 1/4", solenoid operated also with external air pilot, Ø 9 mm or Ø 13 mm plunger, with functions: 3/2 solenoid/spring normally closed, 3/2 solenoid/spring normally open, 3/2 solenoid/solenoid, 5/2 solenoid/spring, 5/2 solenoid/solenoid and solenoid/solenoid differential, 5/3 open centres, closed centres and pressurized centres. Supplied as standard with HNBR seals for low temperature (down to -25°), in compliance to Reach and RoHS directives, SIL certified, and with valve body conforming to 2014/34/EU ATEX Directive, in classification Ex h.
Coils and connectors to be ordered separately. For solenoid operated valves with ATEX coil and connector, in different classification, see from page 5.150.1.

Series AX1 1/4" 3/2 Solenoid/Spring

from page 5.105.10



Series of stainless steel spool valves, with in-line connections, size 1/4", in function 3/2 solenoid/spring normally closed, also with external air pilot, and 3/2 solenoid/spring normally open.
Valve body conforming to 2014/34/UE ATEX Directive in classification:
II 2G Ex h IIC T5 Gb
II 2D Ex h IIIC T100°C Db
Coils and connectors to be ordered separately.

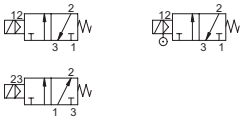

Series AX1 1/4" 3/2 Solenoid/Solenoid

from page 5.105.20

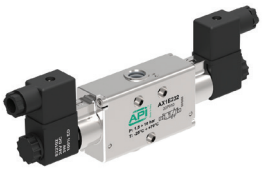

Series of stainless steel spool valves, with in-line connections, size 1/4", in function 3/2 solenoid/solenoid, also with external air pilot.
Valve body conforming to 2014/34/UE ATEX Directive in classification:
II 2G Ex h IIC T5 Gb
II 2D Ex h IIIC T100°C Db
Coils and connectors to be ordered separately.



Series AX1 1/4" 5/2 Solenoid/Spring

from page 5.105.40



Series of stainless steel spool valves, with in-line connections, size 1/4", in function 5/2 solenoid/spring, also with external air pilot.
Valve body conforming to 2014/34/UE ATEX Directive in classification:
II 2G Ex h IIC T5 Gb
II 2D Ex h IIIC T100°C Db
Coils and connectors to be ordered separately.

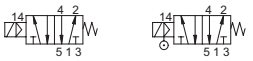

Series AX1 1/4" 5/2 Solenoid/Solenoid

from page 5.105.50



Series of stainless steel spool valves, with in-line connections, size 1/4", in function 5/2 solenoid/solenoid, also with external air pilot, and 5/2 solenoid/solenoid differential.
Valve body conforming to 2014/34/UE ATEX Directive in classification:
II 2G Ex h IIC T5 Gb
II 2D Ex h IIIC T100°C Db
Coils and connectors to be ordered separately.

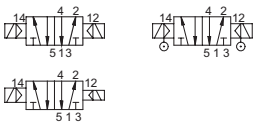

Series AX1 1/4" 5/3

from page 5.105.70



Series of stainless steel spool valves, with in-line connections, size 1/4", in function 5/3 closed centres, 5/3 open centres and 5/3 pressurized centres, also with external air pilot.
Valve body conforming to 2014/34/UE ATEX Directive in classification:
II 2G Ex h IIC T5 Gb
II 2D Ex h IIIC T100°C Db
Coils and connectors to be ordered separately.

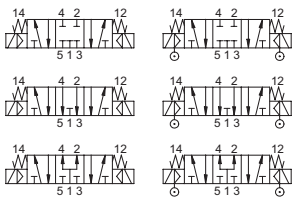

Options

Description		Symbol	Suffix
FKM seals	-10°C ÷ +150°C		**V**
Special versions on request			**/S**

The options, when this is possible, can be combined with each other. For standard options matching see the table below. For code key see from page 5.102.6

Options matching

Series	Size	Function	ATEX	Standard options matching
				V
AX1E	1/4"	3/2 - 5/2 - 5/3	Standard	●
AX1K	1/4"	3/2 - 5/2 - 5/3	Standard	●

Key

● allowed matching; **-** not allowed matching.

Code key

Series	Actuation		Size	Function	Options
AX1	**E**		**2**	**50**	

- Series: AX1
- Actuation:
  - E = Electric
  - K(1) = Electric with external air pilot
  - = Ø 9 mm plunger
  - G(2) = Ø 13 mm plunger
- Size:
  - 2 = 1/4" Gas
  - 2N = 1/4" NPT
- Function:
  - 30 = 3/2 Normally closed
  - 31 = 3/2 Normally open
  - 32 = 3/2 Solenoid/Solenoid
  - 50 = 5/2 Solenoid/Spring
  - 51 = 5/2 Solenoid/Solenoid
  - 52 = 5/2 Solenoid/Solenoid differential
  - 70 = 5/3 Closed Centres
  - 71 = 5/3 Open Centres
  - 72 = 5/3 Pressurized Centres
- Options:
  - V = FKM seals

ATEX note

Valves bodies of series AX1 are supplied as standard according to 214/34/EU ATEX Directive, in classification:

CE Ex II 2G Ex h IIC T5 Gb
II 2D Ex h IIIC T100°C Db

WARNING: by combining an ATEX valve body with a standard coil and/or connector, the resulting solenoid valves will not comply with 2014/34/EU ATEX Directive, in any classification.

For ATEX coils and connectors, see page 5.150.1

For further infomation on the ATEX 2014/34/EU Directive, on classifications and protections, see from page III.1

How to order

Series	Actuation		Size	Function
AX1	**E**		**2**	**50**

Notes

For standard materials, see page 5.102.5

(1) The actuation with external air pilot (K) is available only for functions 3/2 N.C. (30), 3/2 solenoid/solenoid (32), 5/2 solenoid/spring (50), 5/2 solenoid/solenoid (51) and for functions 5/3 (70, 71, 72).

(2) The actuations with Ø 13 mm plunger (EG and KG) are compatible only with ASA34 coils (with increased voltage) for applications with high working pressures (up to 12 bar).

Coils and connectors to be ordered separately, see page 5.109.1

Standard materials

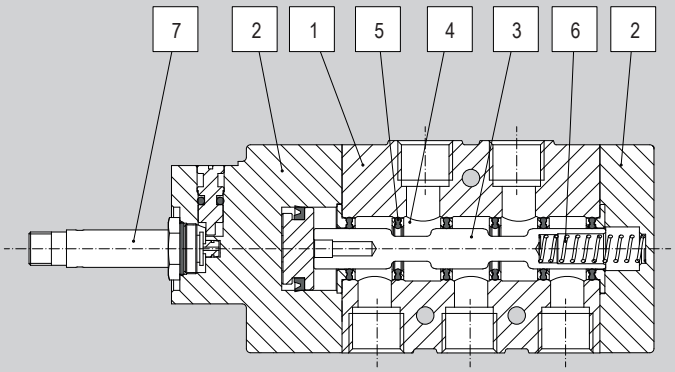

Position	Description	Material	
		1/4"	
		AX1E..	AX1K..
1	Body	Stainless Steel AISI 316L	
2	Covers	Stainless Steel AISI 316L	
3	Spool	Hard anodized aluminium	
4	Distancers	Technopolymer	
5	Seals	HNBR	
6	Spring	Stainless Steel	
7	Plunger	Stainless Steel	

Accessories

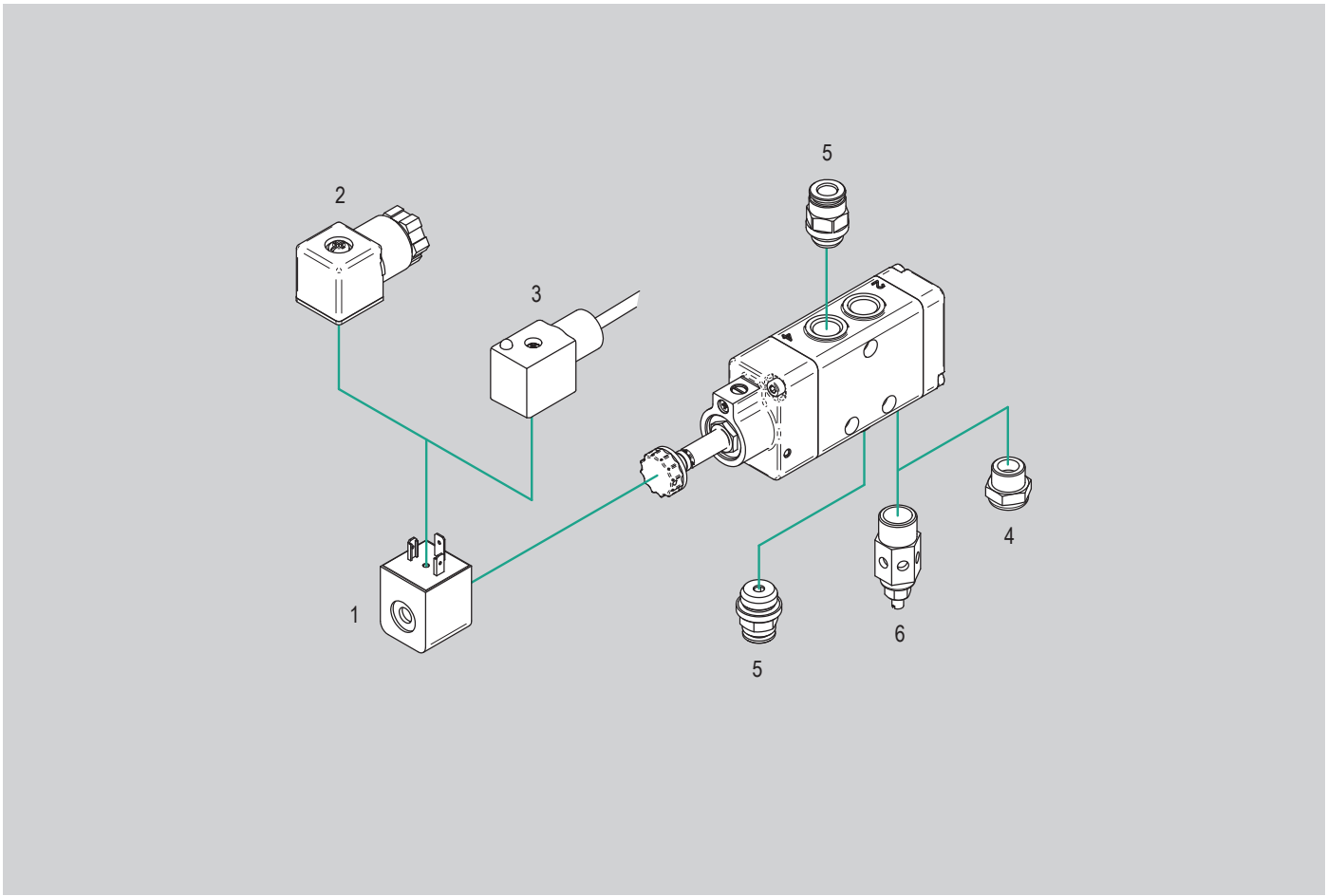

N.	Item	Description	Compliance	Matching				Code key page	Data sheet page
				1/4"					
				AX1E..	AX1EG..	AX1K..	AX1KG..		
1	ASA12..	Coil	EN60204 VDE0580	●	-	●	-	5.109.1	2.315.10
	ASA2..		EN60204.1 VDE0580	●	-	●	-		2.315.11
	ASA34..		EN175301-803-A	-	●	-	●	2.315.14	
	ASA12../ATEXII3	ATEX coil	2014/34/EU	●	-	●	-	5.155.2	
	ASA2../ATEXII2			●	-	●	-	5.156.2	
	ASA4../ATEXII2			●	-	●	-	5.157.2	
2	A12209..	Connector	VDE 0110-1/89	●	-	●	-	5.109.1	2.318.12
	A18209..			●	●	●	●		2.318.14
	A122../ATEX	ATEX connector	2014/34/EU	●	-	●	-	5.155.3	
3	A12209..	Cabled connector	VDE 0110-1/89	●	-	●	-	5.109.1	2.318.12
	A18209..			●	●	●	●		2.318.14
4	AFEX.. AEX.. AEPX.. AERX	Stainless Steel silencers	-	●	●	●	●	5.390.1	
5	RX..	Stainless Steel push-in fittings	UNI ISO 228/1 UNI ISO7/1 ISO R/232	●	●	●	●	5.302.1	
6	AVRX..	Stainless Steel silenced regulators	-	●	●	●	●	5.375.1	

Key
● matching accessory; - not matching accessory

Stainless Steel solenoid operated valves series AX1

1/4", 3/2 solenoid/spring

Main features

Version	Actuation	Code	Item	Symbol
3/2 Normally closed	Electric Ø9	037004X	AX1E230	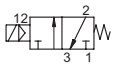
	Electric Ø13	*	AX1EG230	
	Ext. air pilot Ø9	037011X	AX1K230	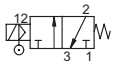
	Ext. air pilot Ø13	*	AX1KG230	
3/2 Normally open	Electric Ø9	037009X	AX1E231	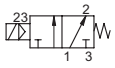
	Electric Ø13	*	AX1EG231	



Technical data

Version	3/2 Normally closed		3/2 Normally closed with external air pilot		3/2 Normally open	
Code	037004X	*	037011X	*	037009X	*
Item	AX1E230	AX1EG230	AX1K230	AX1KG230	AX1E231	AX1EG231
Size	1/4"					
Fluid	Compressed air with or without lubrication. Lubrication, if started, must be continued.					
Pressure range	1,5 ÷ 10 bar	1,5 ÷ 12 bar	1,5 ÷ 10 bar	1,5 ÷ 12 bar	1,5 ÷ 10 bar	1,5 ÷ 12 bar
Minimum external air pressure	-		1,5 bar		-	
Temperature range	-25°C ÷ +70°C (standard) -10°C ÷ +150°C (V)					
Plunger Ø	9 mm	13 mm	9 mm	13 mm	9 mm	13 mm
Orifice Ø	8 mm					
Flow at 6 bar with ΔP 1 bar	1.100 Nl/min.					
ATEX compliance	II 2G Ex h IIC T5 Gb II 2D Ex h IIIC T100°C Db					
Mounting	In every position					
Manual override	Bistable					

Notes

Coils and connectors to be ordered separately.
For matching between valve body and coils, see page 5.102.6
For coils type ASA12, ASA2 and ASA34 (with increased voltage, only for actuations EG and KG) and for connectors A122 and A182, see page 5.109.1
For ATEX coils and connectors see from page 5.150.1

WARNING: combining the ATEX valve body with a standard coil and/or connector, result in the assembly not to comply with 2014/34/EU ATEX Directive, in any classification

* For code, please contact the sales department

For code and availability of NPT threads, please contact the sales department

Standard dimensions

II 2G Ex h IIC T5 Gb
II 2D Ex h IIIC T100°C Db

Type: **3/2 N.C.**
3/2 N.O.

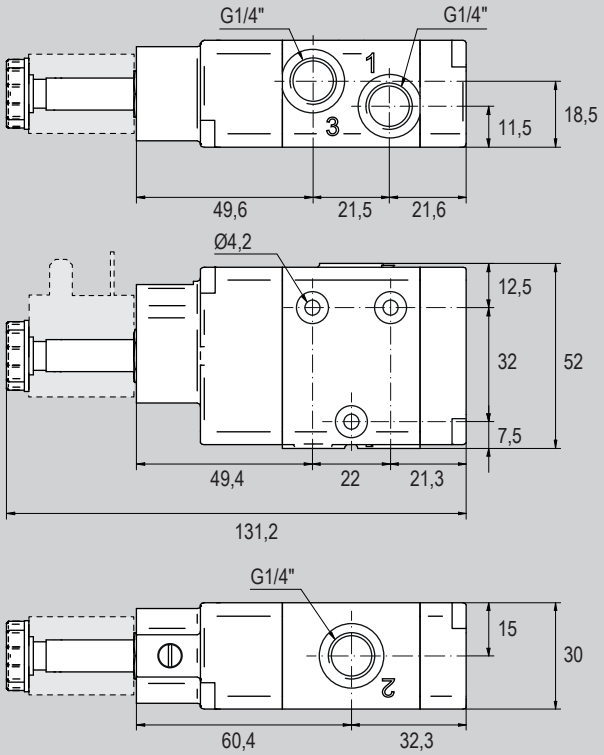

Version	Actuation	Symbol	Code	Item
1/4" 3/2 Normally closed	Electric Ø 9	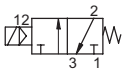	037004X	AX1E230
	Electric Ø 13		*	AX1EG230
1/4" 3/2 Normally open	Electric Ø 9	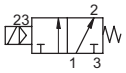	037009X	AX1E231
	Electric Ø 13		*	AX1EG231

*For code, please contact the sales department.
For availability and code of versions with NPT threads (AX1E2N.. and AX1EG2N..), please contact the sales department.

Standard dimensions

II 2G Ex h IIC T5 Gb
II 2D Ex h IIIC T100°C Db

Type: **3/2 N.C. with external air pilot**

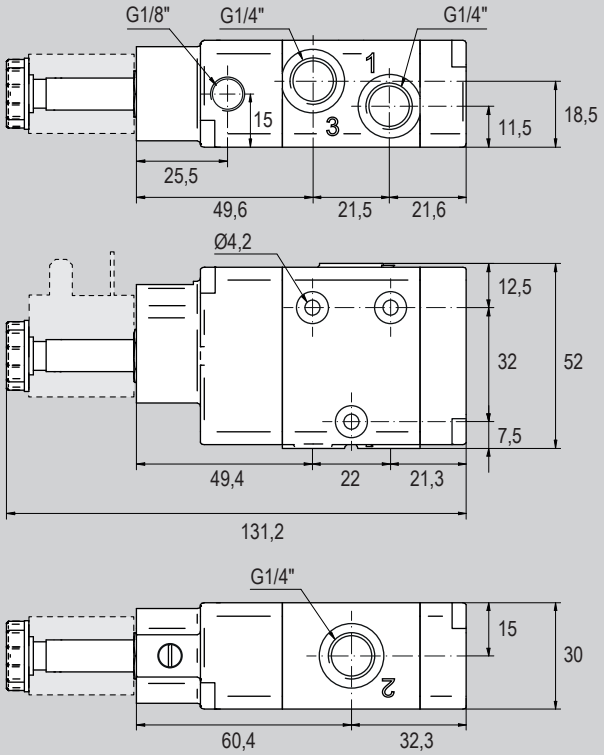

Version	Actuation	Symbol	Code	Item
1/4" 3/2 Normally closed	With external air pilot Ø 9	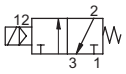	037011X	AX1K230
	With external air pilot Ø 13		*	AX1KG230

*For code, please contact the sales department.
For availability and code of versions with NPT threads (AX1K2N.. and AX1KG2N..), please contact the sales department.

Stainless Steel solenoid operated valves series AX1

1/4", 3/2 solenoid/solenoid

Main features

Version	Actuation	Code	Item	Symbol
3/2 solenoid/solenoid	Electric Ø9	037010X	AX1E232	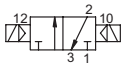
	Electric Ø13	*	AX1EG232	
	Ext. air pilot Ø9	037012X	AX1K232	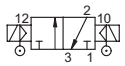
	Ext. air pilot Ø13	*	AX1KG232	

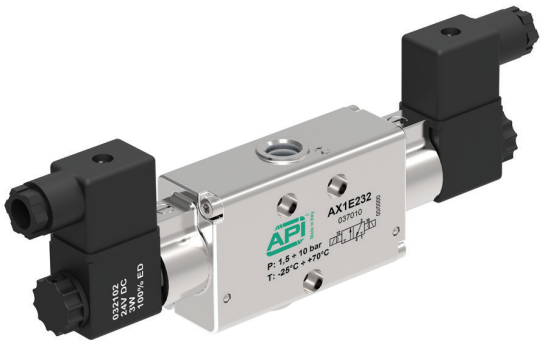

Technical data

Version	3/2 solenoid/solenoid		3/2 solenoid/solenoid with external air pilot	
Code	037010X	*	037012X	*
Item	AX1E232	AX1EG232	AX1K232	AX1KG232
Size	1/4"			
Fluid	Compressed air with or without lubrication. Lubrication, if started, must be continued.			
Pressure range	1 ÷ 10 bar	1 ÷ 12 bar	1 ÷ 10 bar	1 ÷ 12 bar
Minimum external air pressure	-		1,5 bar	
Temperature range	-25°C ÷ +70°C (standard) -10°C ÷ +150°C (V)			
Plunger Ø	9 mm	13 mm	9 mm	13 mm
Orifice Ø	8 mm			
Flow at 6 bar with ΔP 1 bar	1.100 Nl/min.			
ATEX compliance	II 2G Ex h IIC T5 Gb II 2D Ex h IIIC T100°C Db			
Mounting	In every position (vertical not reccomended when in presence of vibrations)			
Manual override	Bistable			

Notes

Coils and connectors to be ordered separately.
For matching between valve body and coils, see page 5.102.6
For coils type ASA12, ASA2 and ASA34 (with increased voltage, only for actuations EG and KG) and for connectors A122 and A182, see page 5.109.1
For ATEX coils and connectors see from page 5.150.1

WARNING: combining the ATEX valve body with a standard coil and/or connector, result in the assembly not to comply with 2014/34/EU ATEX Directive, in any classification

* For code, please contact the sales department

For code and availability of NPT threads, please contact the sales department

Standard dimensions

II 2G Ex h IIC T5 Gb
II 2D Ex h IIIC T100°C Db

Type: **3/2 solenoid/solenoid**

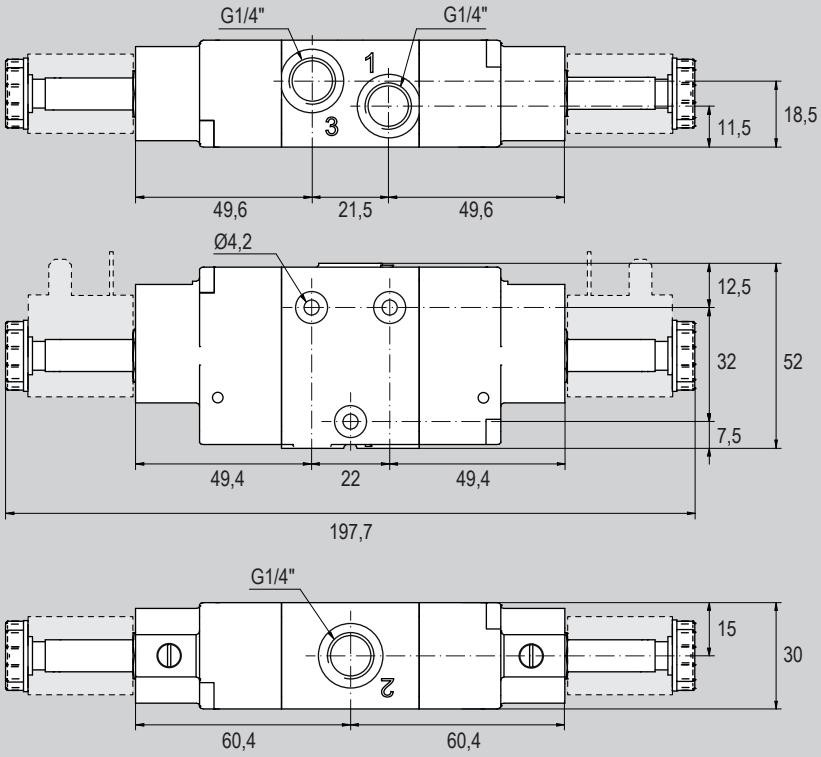

Version	Actuation	Symbol	Code	Item
1/4" 3/2 solenoid/solenoid	Electric Ø 9	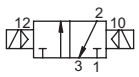	037010X	AX1E232
	Electric Ø 13		*	AX1EG232

*For code, please contact the sales department.
For availability and code of versions with NPT threads (AX1E2N.. and AX1EG2N..), please contact the sales department.

Standard dimensions

II 2G Ex h IIC T5 Gb
II 2D Ex h IIIC T100°C Db

Type: **3/2 solenoid/solenoid with external air pilot**

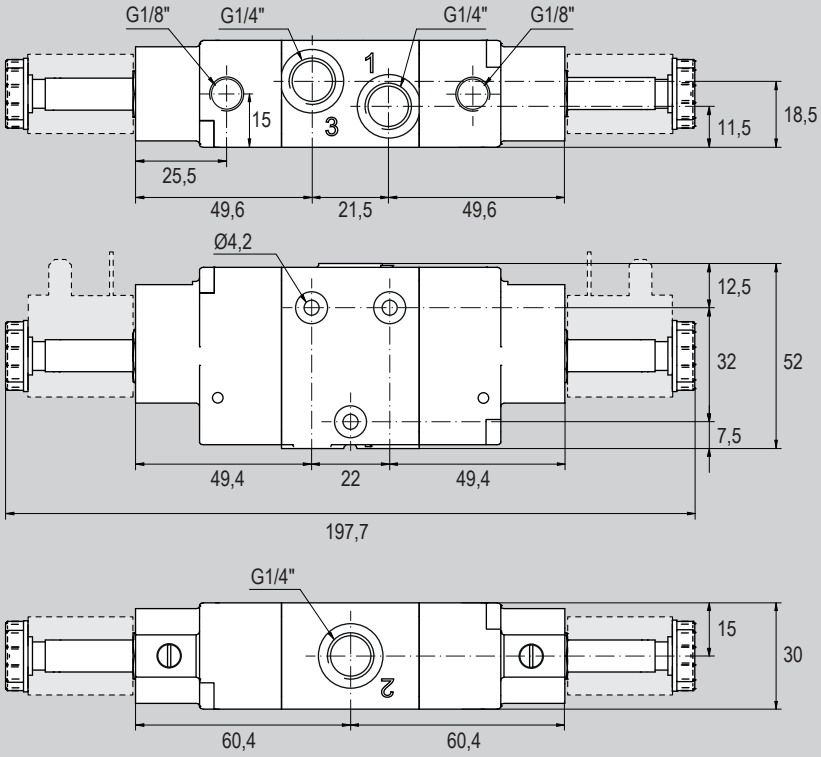

Version	Actuation	Symbol	Code	Item
1/4" 3/2 solenoid/solenoid	With external air pilot Ø 9	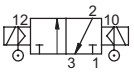	037012X	AX1K232
	With external air pilot Ø 13		*	AX1KG232

*For code, please contact the sales department.
For availability and code of versions with NPT threads (AX1K2N.. and AX1KG2N..), please contact the sales department.

Stainless Steel solenoid operated valves series AX1

1/4", 5/2 solenoid/spring

Main features

Version	Actuation	Code	Item	Symbol
5/2 solenoid/spring	Electric Ø9	037003X	AX1E250	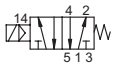
	Electric Ø13	*	AX1EG250	
	Ext. air pilot Ø9	037017X	AX1K250	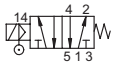
	Ext. air pilot Ø13	*	AX1KG250	



Technical data

Version	5/2 solenoid/spring		5/2 solenoid/spring with external air pilot	
Code	037003X	*	037017X	*
Item	AX1E250	AX1EG250	AX1K250	AX1KG250
Size	1/4"			
Fluid	Compressed air with or without lubrication. Lubrication, if started, must be continued.			
Pressure range	1,5 ÷ 10 bar	1,5 ÷ 12 bar	1,5 ÷ 10 bar	1,5 ÷ 12 bar
Minimum external air pressure	-		1,5 bar	
Temperature range	-25°C ÷ +70°C (standard) -10°C ÷ +150°C (V)			
Plunger Ø	9 mm	13 mm	9 mm	13 mm
Orifice Ø	8 mm			
Flow at 6 bar with ΔP 1 bar	1.100 Nl/min.			
ATEX compliance	II 2G Ex h IIC T5 Gb II 2D Ex h IIIC T100°C Db			
Mounting	In every position			
Manual override	Bistable			

Notes

Coils and connectors to be ordered separately.
For matching between valve body and coils, see page 5.102.6
For coils type ASA12, ASA2 and ASA34 (with increased voltage, only for actuations EG and KG) and for connectors A122 and A182, see page 5.109.1
For ATEX coils and connectors see from page 5.150.1

WARNING: combining the ATEX valve body with a standard coil and/or connector, result in the assembly not to comply with 2014/34/EU ATEX Directive, in any classification

* For code, please contact the sales department

For code and availability of NPT threads, please contact the sales department

Standard dimensions

II 2G Ex h IIC T5 Gb
II 2D Ex h IIIC T100°C Db

Type: **5/2 solenoid/spring**

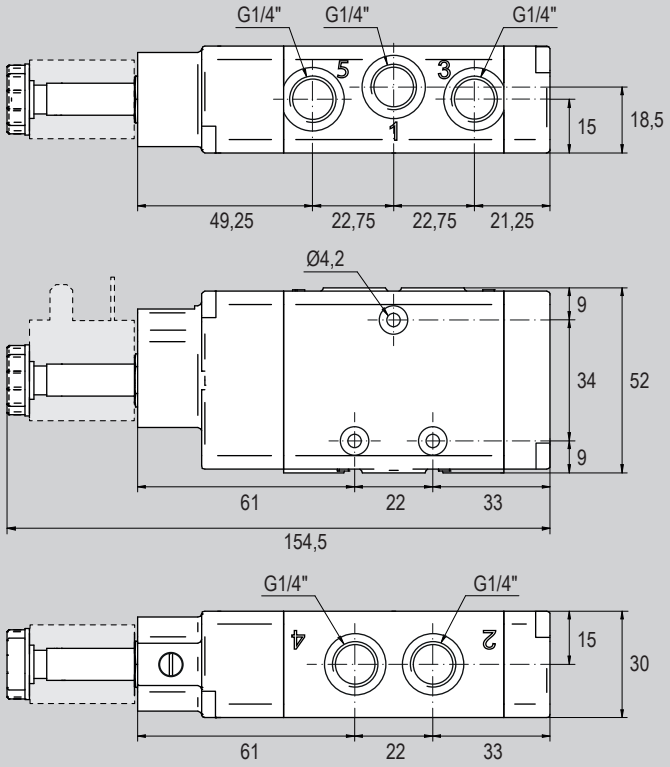

Version	Actuation	Symbol	Code	Item
1/4" 5/2 solenoid/spring	Electric Ø 9	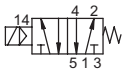	037003X	AX1E250
	Electric Ø 13		*	AX1EG250

*For code, please contact the sales department.
For availability and code of versions with NPT threads (AX1E2N.. and AX1EG2N..), please contact the sales department.

Standard dimensions

II 2G Ex h IIC T5 Gb
II 2D Ex h IIIC T100°C Db

Type: **5/2 solenoid/spring with external air pilot**

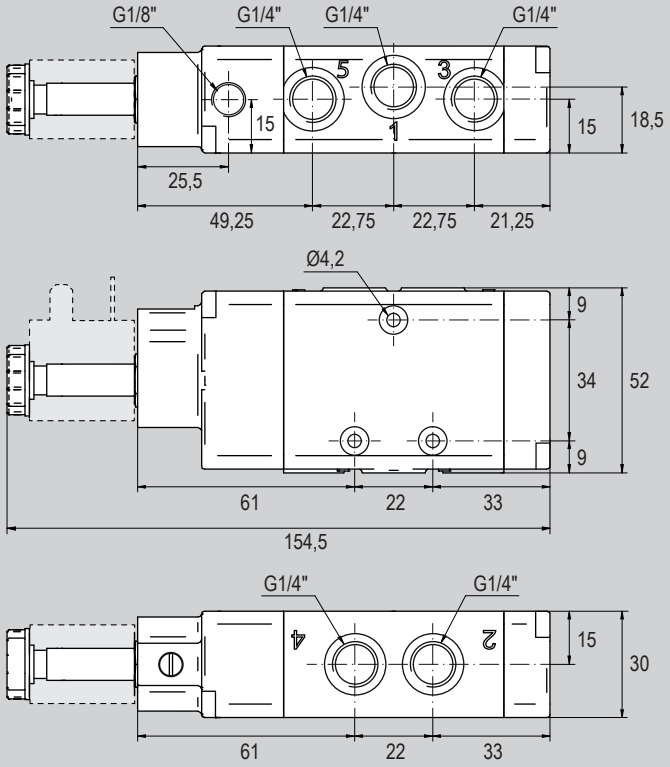

Version	Actuation	Symbol	Code	Item
1/4" 5/2 solenoid/spring	With external air pilot Ø 9	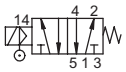	037017X	AX1K250
	With external air pilot Ø 13		*	AX1KG250

*For code, please contact the sales department.
For availability and code of versions with NPT threads (AX1K2N.. and AX1KG2N..), please contact the sales department.

Stainless Steel solenoid operated valves series AX1

1/4", 5/2 solenoid/solenoid

Main features

Version	Actuation	Code	Item	Symbol
5/2 solenoid/solenoid	Electric Ø9	037006X	AX1E251	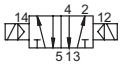
	Electric Ø13	*	AX1EG251	
	Ext. air pilot Ø9	037018X	AX1K251	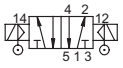
	Ext. air pilot Ø13	*	AX1KG251	
5/2 solenoid/solenoid differential	Electric Ø9	037013X	AX1E252	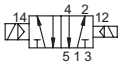
	Electric Ø13	*	AX1EG252	

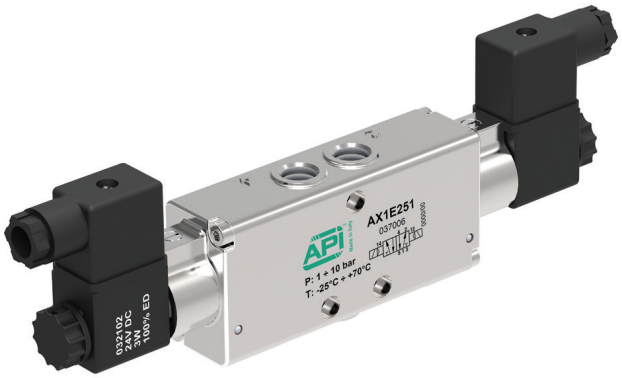

Technical data

Version	5/2 solenoid/solenoid		5/2 solenoid/solenoid with external air pilot		5/2 solenoid/solenoid differential	
Code	037006X	*	037018X	*	037013X	*
Item	AX1E251	AX1EG251	AX1K251	AX1KG251	AX1E252	AX1EG252
Size	1/4"					
Fluid	Compressed air with or without lubrication. Lubrication, if started, must be continued.					
Pressure range	1 ÷ 10 bar	1 ÷ 12 bar	1 ÷ 10 bar	1 ÷ 12 bar	1 ÷ 10 bar	1 ÷ 12 bar
Minimum external air pressure	-		1,5 bar		-	
Temperature range	-25°C ÷ +70°C (standard) -10°C ÷ +150°C (V)					
Plunger Ø	9 mm	13 mm	9 mm	13 mm	9 mm	13 mm
Orifice Ø	8 mm					
Flow at 6 bar with ΔP 1 bar	1.100 Nl/min.					
ATEX compliance	II 2G Ex h IIC T5 Gb II 2D Ex h IIIC T100°C Db					
Mounting	In every position (vertical not reccomended when in presence of vibrations)					
Manual override	Bistable					

Notes

Coils and connectors to be ordered separately.
For matching between valve body and coils, see page 5.102.6
For coils type ASA12, ASA2 and ASA34 (with increased voltage, only for actuations EG and KG) and for connectors A122 and A182, see page 5.109.1
For ATEX coils and connectors see from page 5.150.1

WARNING: combining the ATEX valve body with a standard coil and/or connector, result in the assembly not to comply with 2014/34/EU ATEX Directive, in any classification

* For code, please contact the sales department

For code and availability of NPT threads, please contact the sales department

Standard dimensions

II 2G Ex h IIC T5 Gb
II 2D Ex h IIIC T100°C Db

Type: **5/2 solenoid/solenoid**
5/2 solenoid/solenoid differential

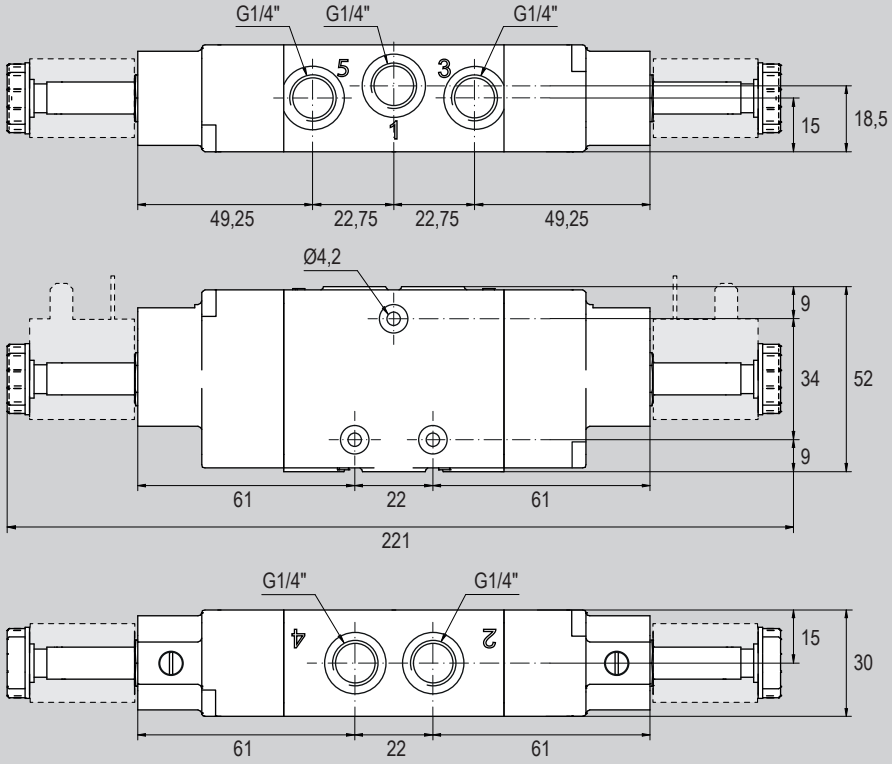

Version	Actuation	Symbol	Code	Item
1/4" 5/2 solenoid/solenoid	Electric Ø 9	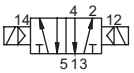	037006X	AX1E251
	Electric Ø 13		*	AX1EG251
1/4" 5/2 solenoid/solenoid differential	Electric Ø 9	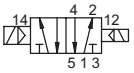	037013X	AX1E252
	Electric Ø 13		*	AX1EG252

*For code, please contact the sales department.
For availability and code of versions with NPT threads (AX1E2N.. and AX1EG2N..), please contact the sales department.

Standard dimensions

II 2G Ex h IIC T5 Gb
II 2D Ex h IIIC T100°C Db

Type: **5/2 solenoid/solenoid with external air pilot**

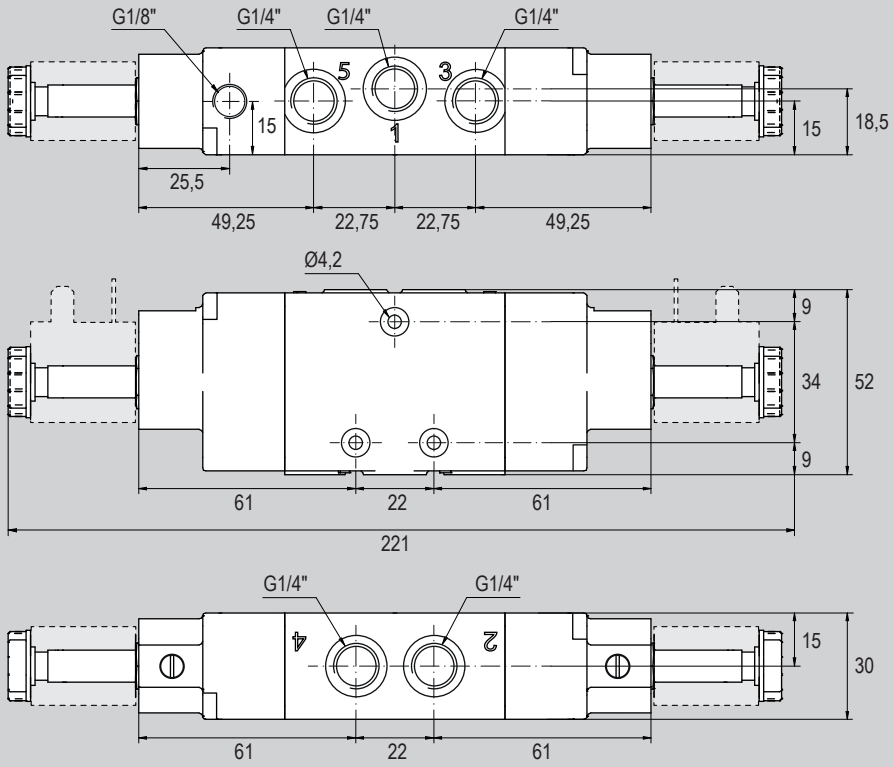

Version	Actuation	Symbol	Code	Item
1/4" 5/2 solenoid/solenoid	With external air pilot Ø 9	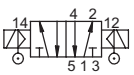	037018X	AX1K251
	With external air pilot Ø 13		*	AX1KG251

*For code, please contact the sales department.
For availability and code of versions with NPT threads (AX1K2N.. and AX1KG2N..), please contact the sales department.

Stainless Steel solenoid operated valves series AX1
1/4", 5/3

Main features

Version	Actuation	Code	Item	Symbol
5/3 Closed Centres	Electric Ø9	037014X	AX1E270	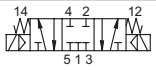
	Electric Ø13	*	AX1EG270	
	Ext. air pilot Ø9	037019X	AX1K270	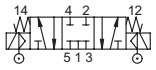
	Ext. air pilot Ø13	*	AX1KG270	
5/3 Open Centres	Electric Ø9	037015X	AX1E271	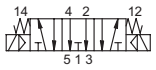
	Electric Ø13	*	AX1EG271	
	Ext. air pilot Ø9	037020X	AX1K271	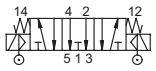
	Ext. air pilot Ø13	*	AX1KG271	
5/3 Pressurized Centres	Electric Ø9	037016X	AX1E272	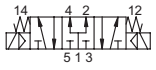
	Electric Ø13	*	AX1EG272	
	Ext. air pilot Ø9	037021X	AX1K272	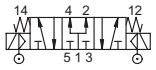
	Ext. air pilot Ø13	*	AX1KG272	

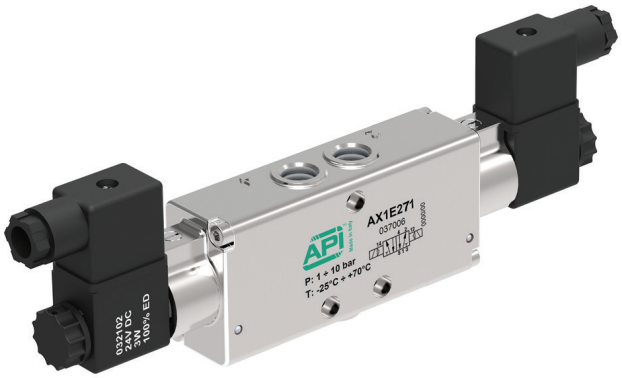

Technical data

Version	5/3 Closed Centres		5/3 Closed Centres with external air pilot		5/3 Open Centres		5/3 Open Centres with external air pilot		5/3 Pressurized Centres		5/3 Pressurized Centres with external air pilot	
Code	037014X	*	037019X	*	037015X	*	037020X	*	037016X	*	037021X	*
Item	AX1E270	AX1EG270	AX1K270	AX1KG270	AX1E271	AX1EG271	AX1K271	AX1KG271	AX1E272	AX1EG272	AX1K272	AX1KG272
Size	1/4"											
Fluid	Compressed air with or without lubrication. Lubrication, if started, must be continued.											
Pressure range	2,5÷10 bar	2,5÷12 bar	2,5÷10 bar	2,5÷12 bar	2,5÷10 bar	2,5÷12 bar	2,5÷10 bar	2,5÷12 bar	2,5÷10 bar	2,5÷12 bar	2,5÷10 bar	2,5÷12 bar
Minimum external air pressure	-		1,5 bar		-		1,5 bar		-		1,5 bar	
Temperature range	-25°C ÷ +70°C (standard) -10°C ÷ +150°C (V)											
Plunger Ø	9 mm	13 mm	9 mm	13 mm	9 mm	13 mm	9 mm	13 mm	9 mm	13 mm	9 mm	13 mm
Orifice Ø	8 mm											
Flow at 6 bar with ΔP 1 bar	1.100 Nl/min.											
ATEX compliance	II 2G Ex h IIC T5 Gb II 2D Ex h IIIC T100°C Db											
Mounting	In every position											
Manual override	Bistable											

Notes

Coils and connectors to be ordered separately.
For matching between valve body and coils, see page 5.102.6
For coils type ASA12, ASA2 and ASA34 (with increased voltage, only for actuations EG and KG) and for connectors A122 and A182, see page 5.109.1
For ATEX coils and connectors see from page 5.150.1

WARNING: combining the ATEX valve body with a standard coil and/or connector, result in the assembly not to comply with 2014/34/EU ATEX Directive, in any classification

* For code, please contact the sales department

For code and availability of NPT threads, please contact the sales department

Standard dimensions

II 2G Ex h IIC T5 Gb
II 2D Ex h IIIC T100°C Db

Type: **5/3 C.C.**
5/3 O.C.
5/3 P.C.

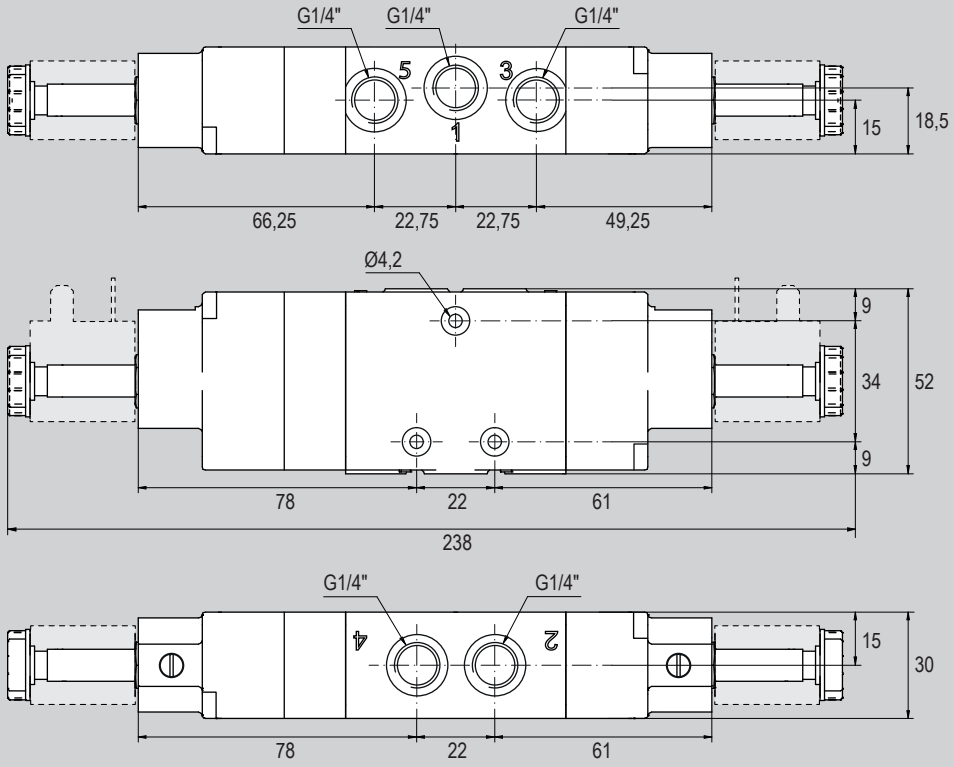

Version	Actuation	Symbol	Code	Item
1/4" 5/3 Closed Centres	Electric Ø 9	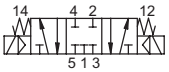	037014X	AX1E270
	Electric Ø 13		*	AX1EG270
1/4" 5/3 Open Centres	Electric Ø 9	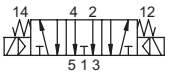	037015X	AX1E271
	Electric Ø 13		*	AX1EG271
1/4" 5/3 Pressurized Centres	Electric Ø 9	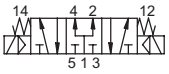	037016X	AX1E272
	Electric Ø 13		*	AX1EG272

*For code, please contact the sales department.
For availability and code of versions with NPT threads (AX1E2N.. and AX1EG2N..), please contact the sales department.

Standard dimensions

II 2G Ex h IIC T5 Gb
II 2D Ex h IIIC T100°C Db

Type: **5/3 C.C. with external air pilot**
5/3 O.C. with external air pilot
5/3 P.C. with external air pilot

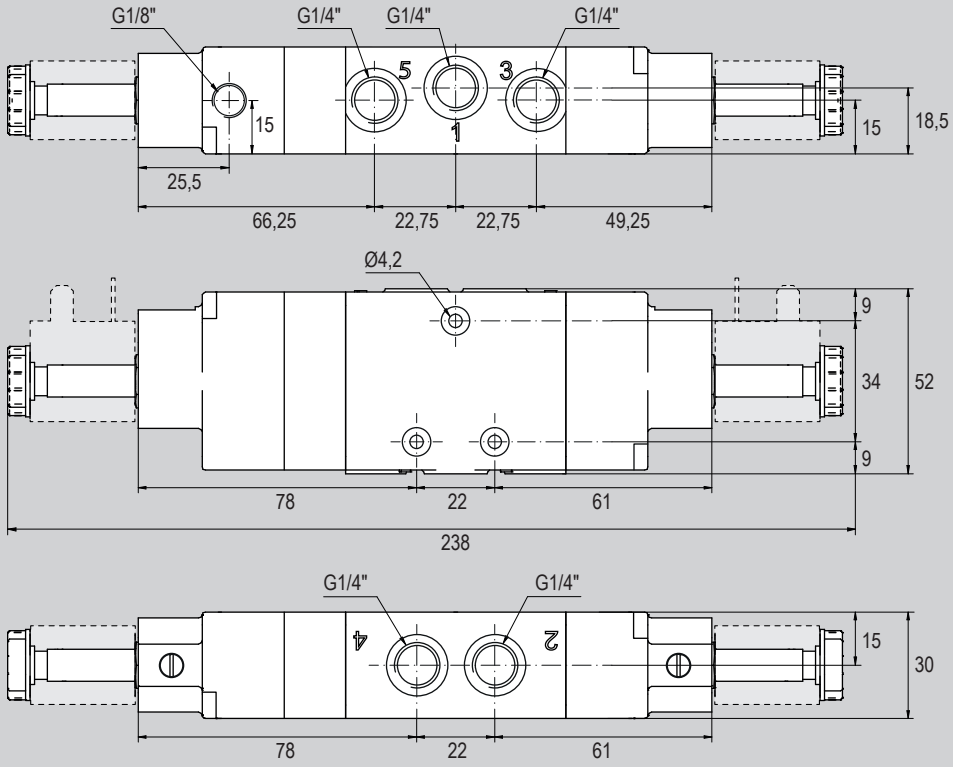

Version	Actuation	Symbol	Code	Item
1/4" 5/3 Closed Centres	With external air pilot Ø 9	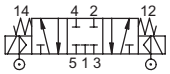	037019X	AX1K270
	With external air pilot Ø 13		*	AX1KG270
1/4" 5/3 Open Centres	With external air pilot Ø 9	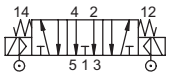	037020X	AX1K271
	With external air pilot Ø 13		*	AX1KG271
1/4" 5/3 Pressurized Centres	With external air pilot Ø 9	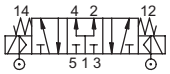	037021X	AX1K272
	With external air pilot Ø 13		*	AX1KG272

*For code, please contact the sales department.
For availability and code of versions with NPT threads (AX1K2N.. and AX1KG2N..), please contact the sales department.

Coils ASA12..



Voltage	Code	Item	Matching
12V DC	032100	ASA1201200	AX1E AX1K
12V AC	032101	ASA1201250	
24V DC	032102	ASA1202400	
24V AC	032103	ASA1202450	
48V AC	032104	ASA1204850	
110V AC	032105	ASA1211050	
230V AC	032106	ASA1223050	

Coils ASA2..



Voltage	Code	Item	Matching
12V DC	032109	ASA201200	AX1E AX1K
12V AC	032110	ASA201250	
24V DC	032111	ASA202400	
24V AC	032112	ASA202450	
48V AC	032113	ASA204850	
110V AC	032114	ASA211050	
230V AC	032115	ASA223050	

Coils ASA34..



Voltage	Code	Item	Matching
24V DC	034341	ASA3402400	AX1EG AX1KG
24V AC	034340	ASA3402450	
110V AC	034342	ASA3411050	
240V AC	034343	ASA3424050	

Connectors A122..(1)



Code	Item	Version
032118	A12209N	Black standard
033521	A12209NK	Black standard cabled
032204	A12209T1	LED+VDR transparent 24VAC-DC
032205	A12209T2	LED+VDR transparent 115VAC-DC
032206	A12209T3	LED+VDR transparent 230VAC-DC
033522	A12209N1K	LED+VDR black cabled 24VAC-DC
033523	A12209N2K	LED+VDR black cabled 115VAC-DC
033524	A12209N3K	LED+VDR black cabled 230VAC-DC

(1) For coils type ASA12

Connectors A182..(2)



Code	Item	Version
032119	A18209N	Black standard
033531	A18209NK	Black standard cabled
032207	A18209T1	LED+VDR transparent 24VAC-DC
032208	A18209T2	LED+VDR transparent 115VAC-DC
032209	A18209T3	LED+VDR transparent 230VAC-DC
033532	A18209N1K	LED+VDR black cabled 24VAC-DC
033533	A18209N2K	LED+VDR black cabled 115VAC-DC
033534	A18209N3K	LED+VDR black cabled 230VAC-DC

(2) For coils type ASA2 and ASA34

STAINLESS STEEL

air operated valves Series AX1

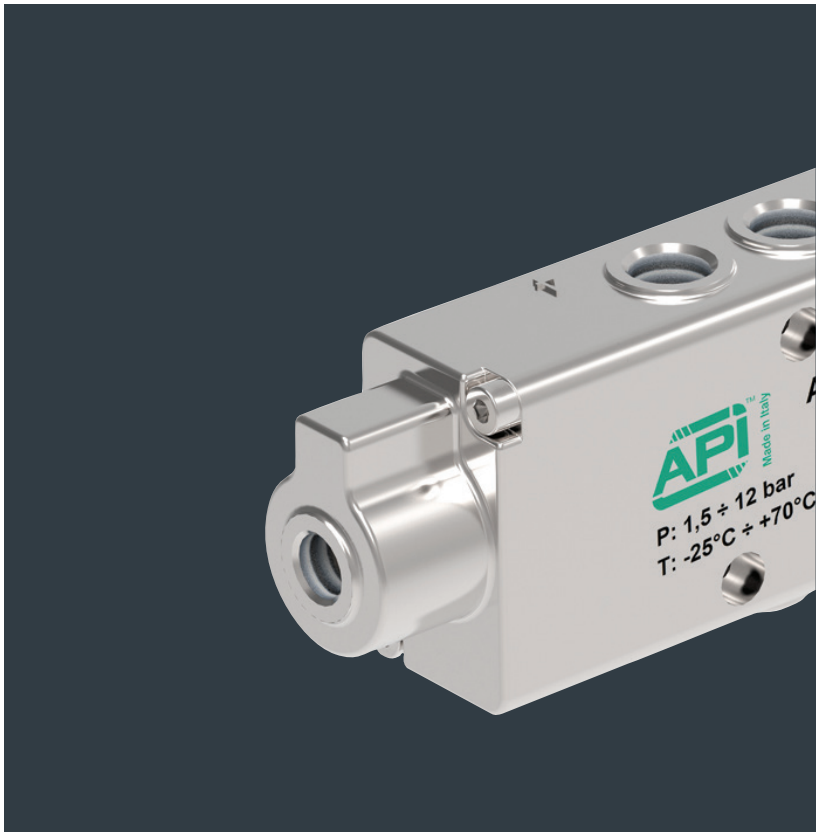

Find out our
key products

- **Solution for most applications**
- **Easy and intuitive choice**
- **Excellent value for money**
- **Wide availability**
- **Fast delivery**

Main features and certifications

Series of stainless steel spool valves, with in-line connections. Available in size 1/4", air operated, with functions 3/2 pilot/spring normally closed, 3/2 pilot/spring normally open, 3/2 pilot/pilot, 5/2 pilot/spring, 5/2 pilot/pilot and pilot/pilot differential, 5/3 open centres, closed centres and pressurized centres. Supplied as standard with HNBR seals for low temperature (down to -25°), in compliance to Reach and RoHS directives, SIL certified, and conforming to 2014/34/EU ATEX Directive, in classification Ex h.

Series AX1 1/4" 3/2 Pilot/Spring

from page 5.116.10



Series of stainless steel spool valves, with in-line connections, size 1/4" air operated, in function 3/2 pilot/spring normally closed and 3/2 pilot/spring normally open.
Conforming to 2014/34/UE ATEX Directive in classification:
II 2G Ex h IIC T5 Gb
II 2D Ex h IIIC T100°C Db

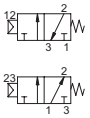

Series AX1 1/4" 3/2 Pilot/Pilot

from page 5.116.20



Series of stainless steel spool valves, with in-line connections, size 1/4" air operated, in function 3/2 pilot/pilot.
Conforming to 2014/34/UE ATEX Directive in classification:
II 2G Ex h IIC T5 Gb
II 2D Ex h IIIC T100°C Db



Series AX1 1/4" 5/2 Pilot/Spring

from page 5.116.40



Series of stainless steel spool valves, with in-line connections, size 1/4" air operated, in function 5/2 pilot/spring.
Conforming to 2014/34/UE ATEX Directive in classification:
II 2G Ex h IIC T5 Gb
II 2D Ex h IIIC T100°C Db



Series AX1 1/4" 5/2 Pilot/Pilot

from page 5.116.50



Series of stainless steel spool valves, with in-line connections, size 1/4" air operated, in function 5/2 pilot/pilot and 5/2 pilot/pilot differential.
Conforming to 2014/34/UE ATEX Directive in classification:
II 2G Ex h IIC T5 Gb
II 2D Ex h IIIC T100°C Db

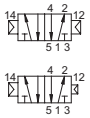

Series AX1 1/4" 5/3

from page 5.116.70



Series of stainless steel spool valves, with in-line connections, size 1/4" air operated, in function 5/3 closed centres, 5/3 open centres and 5/3 pressurized centres.
Conforming to 2014/34/UE ATEX Directive in classification:
II 2G Ex h IIC T5 Gb
II 2D Ex h IIIC T100°C Db

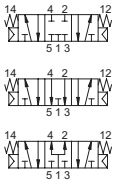

Options

Description		Symbol	Suffix
FKM seals	-10°C ÷ +150°C		**V**
Special versions on request			**/S**

The options, when this is possible, can be combined with each other. For standard options matching see the table below. For code key see from page 5.115.4

Options matching

Series	Size	Function	ATEX	Standard options matching
				V
AX1	1/4"	3/2 - 5/2 - 5/3	Standard	●

Key

● allowed matching; - not allowed matching.

Code key

Series	Actuation	Size	Function	Options
AX1	**P**	**2**	**50**	
AX1	P = Pneumatic	2 = 1/4" Gas	30 = 3/2 Normally closed	V = FKM seals
		2N = 1/4" NPT	31 = 3/2 Normally open	
			32 = 3/2 Pilot/Pilot	
			50 = 5/2 Pilot/Spring	
			51 = 5/2 Pilot/Pilot	
			52 = 5/2 Pilot/Pilot differential	
			70 = 5/3 Closed Centres	
			71 = 5/3 Open Centres	
			72 = 5/3 Pressurized Centres	

ATEX note

The valves series AX1 are supplied as standard conforming to 2014/34/EU ATEX Directive

CE Ex II 2G Ex h IIC T5 Gb
II 2D Ex h IIIC T100°C Db

For further infomation on the ATEX 2014/34/EU Directive, on classifications and protections, see from page III.1

How to order

Series	Actuation	Size	Function
AX1	**P**	**2**	**50**

Notes

For standard materials, see page 5.115.5.

Standard materials

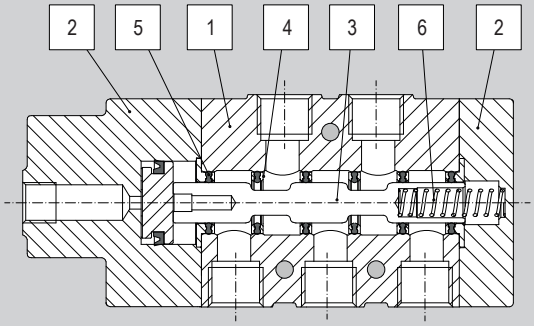

Position	Description	Material
		1/4"
		AX1P..
1	Body	Stainless Steel AISI 316L
2	Covers	Stainless Steel AISI 316L
3	Spool	Hard anodized aluminium
4	Distancers	Technopolymer
5	Seals	HNBR
6	Spring	Stainless Steel

Accessories

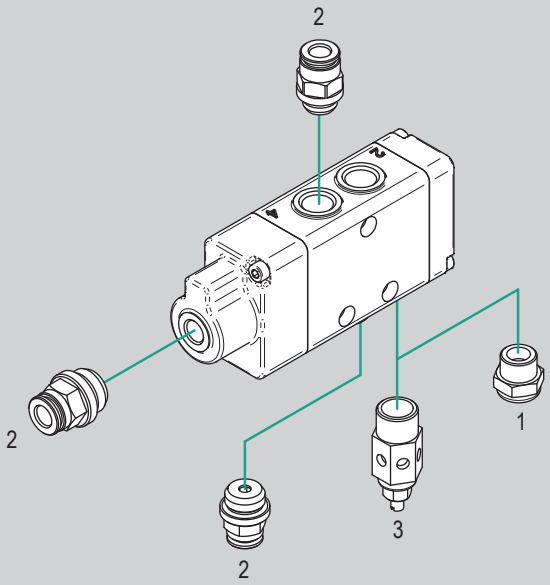

N.	Item	Description	Compliance	Matching	Code key page	Data sheet page
				1/4"		
				AX1P..		
1	AFEX.. AEX.. AEPX.. AERX	Stainless Steel silencers	-	●	5.390.1	
2	RX..	Stainless Steel push-in fittings	UNI ISO 228/1 UNI ISO7/1 ISO R/232	●	5.302.1	
3	AVRX..	Stainless Steel silenced regulators	-	●	5.375.1	

Key
● matching accessory; - not matching accessory

Stainless Steel air operated valves series AX1
1/4", 3/2 pilot/spring

Main features

Version	Code	Item	Symbol
3/2 Normally closed	037002X	AX1P230	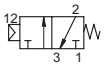
3/2 Normally open	037022X	AX1P231	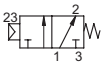



Technical data

Version	3/2 Normally closed	3/2 Normally open
Code	037002X	037022X
Item	AX1P230	AX1P231
Size	1/4"	
Fluid	Compressed air with or without lubrication. Lubrication, if started, must be continued.	
Pressure range	1,5 ÷ 12 bar	
Temperature range	-25°C ÷ +70°C (standard) -10°C ÷ +150°C (V)	
Orifice Ø	8 mm	
Flow at 6 bar with ΔP 1 bar	1.100 Nl/min.	
ATEX compliance	II 2G Ex h IIC T5 Gb II 2D Ex h IIIC T100°C Db	
Mounting	In every position	

Notes

For code and availability of NPT threads, please contact the sales department

Standard dimensions

II 2G Ex h IIC T5 Gb
II 2D Ex h IIIC T100°C Db

Type: **3/2 N.C.**
3/2 N.O.

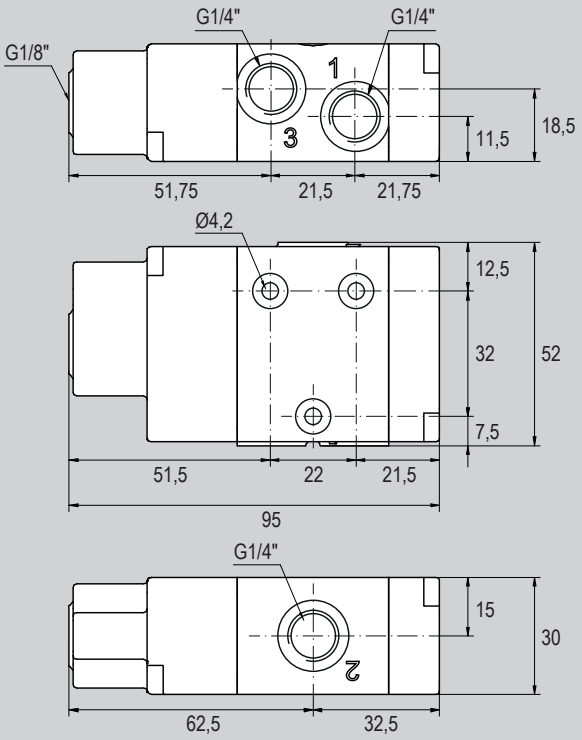

Version	Actuation	Symbol	Code	Item
1/4" 3/2 Normally closed	Pneumatic	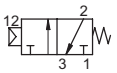	037002X	AX1P230
1/4" 3/2 Normally open	Pneumatic	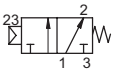	037022X	AX1P231

For availability and code of versions with NPT threads (AX1P2N..), please contact the sales department.

Stainless Steel air operated valves series AX1

1/4", 3/2 pilot/pilot

Main features

Version	Code	Item	Symbol
3/2 pilot/pilot	037023X	AX1P232	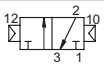

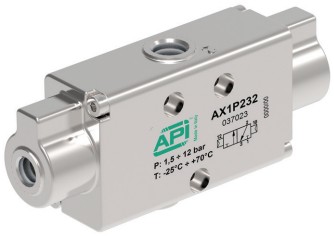

Technical data

Version	3/2 pilot/pilot
Code	037023X
Item	AX1P232
Size	1/4"
Fluid	Compressed air with or without lubrication. Lubrication, if started, must be continued.
Pressure range	1 ÷ 12 bar
Temperature range	-25°C ÷ +70°C (standard) -10°C ÷ +150°C (V)
Orifice Ø	8 mm
Flow at 6 bar with ΔP 1 bar	1.100 Nl/min.
ATEX compliance	II 2G Ex h IIC T5 Gb II 2D Ex h IIIC T100°C Db
Mounting	In every position (vertical not reccomended when in presence of vibrations)

Notes

For code and availability of NPT threads, please contact the sales department

Standard dimensions

II 2G Ex h IIC T5 Gb
II 2D Ex h IIIC T100°C Db

Type: **3/2 pilot/pilot**

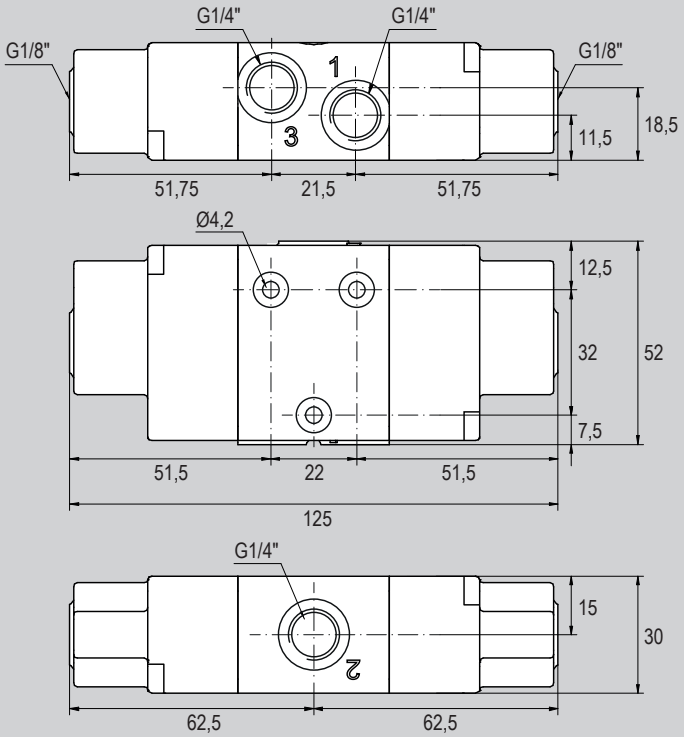

Version	Actuation	Symbol	Code	Item
1/4" 3/2 pilot/pilot	Pneumatic	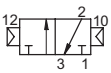	037023X	AX1P232

For availability and code of versions with NPT threads (AX1P2N..), please contact the sales department.

Stainless Steel air operated valves series AX1

1/4", 5/2 pilot/spring

Main features

Version	Code	Item	Symbol
5/2 pilot/spring	037001X	AX1P250	



Technical data

Version	5/2 pilot/spring
Code	037001X
Item	AX1P250
Size	1/4"
Fluid	Compressed air with or without lubrication. Lubrication, if started, must be continued.
Pressure range	1,5 ÷ 12 bar
Temperature range	-25°C ÷ +70°C (standard) -10°C ÷ +150°C (V)
Orifice Ø	8 mm
Flow at 6 bar with ΔP 1 bar	1.100 Nl/min.
ATEX compliance	II 2G Ex h IIC T5 Gb II 2D Ex h IIIC T100°C Db
Mounting	In every position

Notes

For code and availability of NPT threads, please contact the sales department

Standard dimensions

II 2G Ex h IIC T5 Gb
II 2D Ex h IIIC T100°C Db

Type: **5/2 pilot/spring**

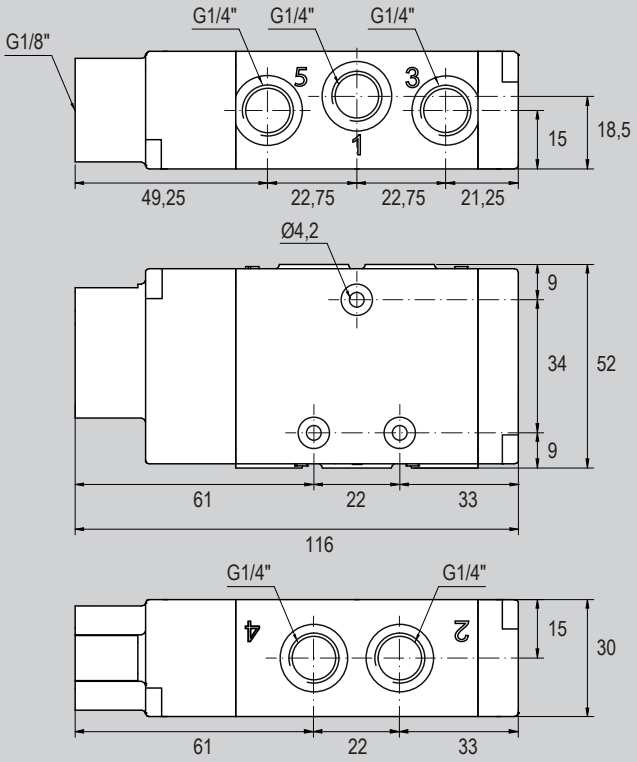

Version	Actuation	Symbol	Code	Item
1/4" 5/2 pilot/spring	Pneumatic	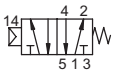	037001X	AX1P250

For availability and code of versions with NPT threads (AX1P2N..), please contact the sales department.

Stainless Steel air operated valves series AX1
1/4", 5/2 pilot/pilot

Main features

Version	Code	Item	Symbol
5/2 pilot/pilot	037024X	AX1P251	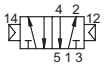
5/2 pilot/pilot differential	037025X	AX1P252	



Technical data

Version	5/2 pilot/pilot	5/2 pilot/pilot differential
Code	037024X	037024X
Item	AX1P251	AX1P252
Size	1/4"	
Fluid	Compressed air with or without lubrication. Lubrication, if started, must be continued.	
Pressure range	1 ÷ 12 bar	
Temperature range	-25°C ÷ +70°C (standard) -10°C ÷ +150°C (V)	
Orifice Ø	8 mm	
Flow at 6 bar with ΔP 1 bar	1.100 Nl/min.	
ATEX compliance	II 2G Ex h IIC T5 Gb II 2D Ex h IIIC T100°C Db	
Mounting	In every position (vertical not reccomended when in presence of vibrations)	

Notes

For code and availability of NPT threads, please contact the sales department

Standard dimensions

II 2G Ex h IIC T5 Gb
II 2D Ex h IIIC T100°C Db

Type: **5/2 pilot/pilot**
5/2 pilot/pilot differential

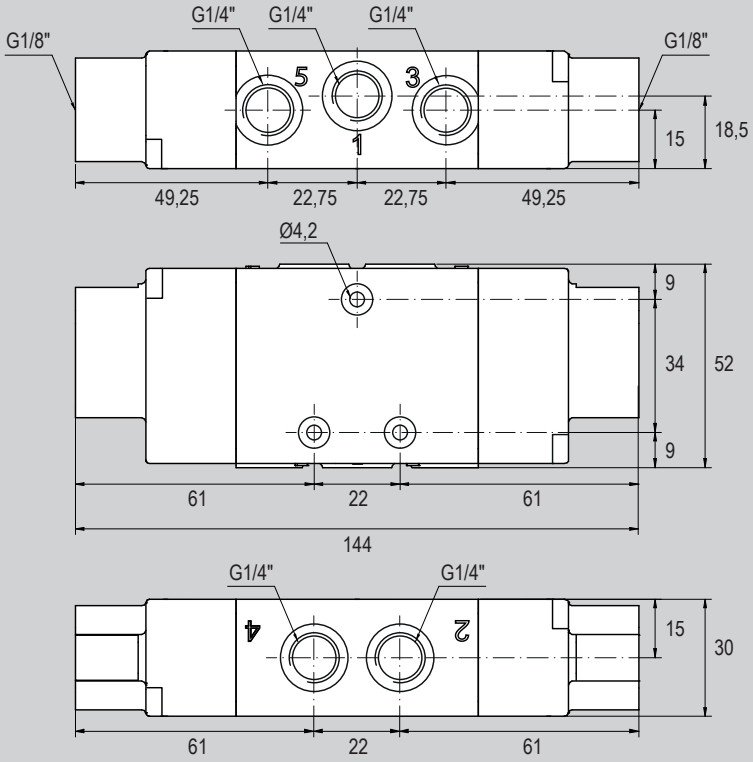

Version	Actuation	Symbol	Code	Item
1/4" 5/2 pilot/pilot	Pneumatic		037024X	AX1P251
1/4" 5/2 pilot/pilot differential	Pneumatic		037025X	AX1P252

For availability and code of versions with NPT threads (AX1P2N..), please contact the sales department.

Stainless Steel air operated valves series AX1
1/4", 5/3

Main features

Version	Code	Item	Symbol
5/3 Closed Centres	037026X	AX1P270	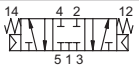
5/3 Open Centres	037027X	AX1P271	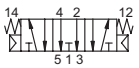
5/3 Pressurized Centres	037028X	AX1P272	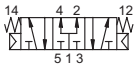



Technical data

Version	5/3 Closed Centres	5/3 Open Centres	5/3 Pressurized Centres
Code	037026X	037027X	037028X
Item	AX1P270	AX1P271	AX1P272
Size	1/4"		
Fluid	Compressed air with or without lubrication. Lubrication, if started, must be continued.		
Pressure range	2,5 ÷ 12 bar		
Temperature range	-25°C ÷ +70°C (standard) -10°C ÷ +150°C (V)		
Orifice Ø	8 mm		
Flow at 6 bar with ΔP 1 bar	1.100 Nl/min.		
ATEX compliance	II 2G Ex h IIC T5 Gb II 2D Ex h IIIC T100°C Db		
Mounting	In every position		

Notes

For code and availability of NPT threads, please contact the sales department

Standard dimensions

II 2G Ex h IIC T5 Gb
II 2D Ex h IIIC T100°C Db

Type: **5/3 C.C.**
5/3 O.C.
5/3 P.C.

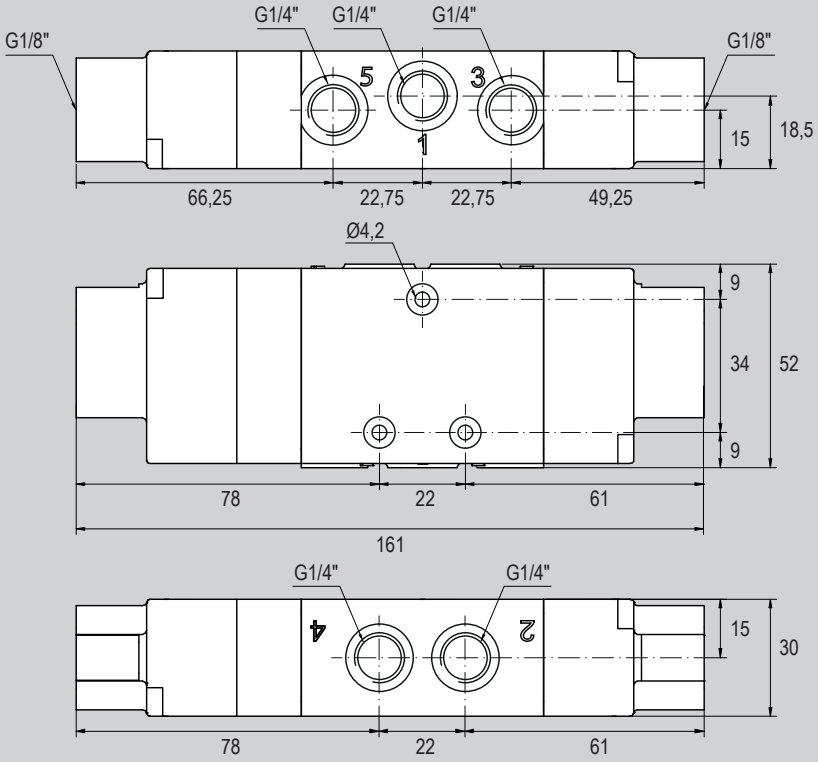

Version	Actuation	Symbol	Code	Item
1/4" 5/3 Closed Centres	Pneumatic	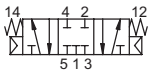	037026X	AX1P270
1/4" 5/3 Open Centres	Pneumatic	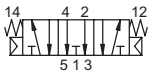	037027X	AX1P271
1/4" 5/3 Pressurized Centres	Pneumatic	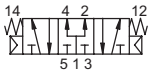	037028X	AX1P272

For availability and code of versions with NPT threads (AX1P2N..), please contact the sales department.

STAINLESS STEEL

NAMUR solenoid operated valves Series AX1N



Find out our
key products

- **Solution for most applications**
- **Easy and intuitive choice**
- **Excellent value for money**
- **Wide availability**
- **Fast delivery**

Main features and certifications

Series of stainless steel spool valves, with Namur interface. Available in size 1/4", solenoid operated also with external air pilot, Ø 9 mm or Ø 13 mm plunger, in functions: 3/2 solenoid/spring normally closed, 3/2 solenoid/solenoid, 5/2 solenoid/spring and 5/2 solenoid/solenoid.
Supplied as standard with HNBR seals for low temperature (down to -25°), in compliance to Reach and RoHS directives, SIL certified, and with valve body conforming to 2014/34/EU ATEX Directive, in classification Ex h..
Coils and connectors to be ordered separately. For solenoid operated valves with ATEX coil and connector, in different classification, see from page 5.150.1.

Series AX1N 1/4" 3/2 Solenoid/Spring

from page 5.122.10



Series of stainless steel spool valves, with Namur interface, size 1/4", in function 3/2 solenoid/spring normally closed.
Valve body conforming to 2014/34/UE ATEX Directive in classification:
II 2G Ex h IIC T5 Gb
II 2D Ex h IIIC T100°C Db
Coils and connectors to be ordered separately.



Series AX1N 1/4" 3/2 Solenoid/Solenoid

from page 5.122.20



Series of stainless steel spool valves, with Namur interface, size 1/4", in function 3/2 solenoid/solenoid.
Valve body conforming to 2014/34/UE ATEX Directive in classification:
II 2G Ex h IIC T5 Gb
II 2D Ex h IIIC T100°C Db
Coils and connectors to be ordered separately.

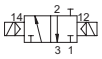

Series AX1N 1/4" 5/2 Solenoid/Spring

from page 5.122.40



Series of stainless steel spool valves, with Namur interface, size 1/4", in function 5/2 solenoid/spring.
Valve body conforming to 2014/34/UE ATEX Directive in classification:
II 2G Ex h IIC T5 Gb
II 2D Ex h IIIC T100°C Db
Coils and connectors to be ordered separately.



Series AX1N 1/4" 5/2 Solenoid/Solenoid

from page 5.122.50

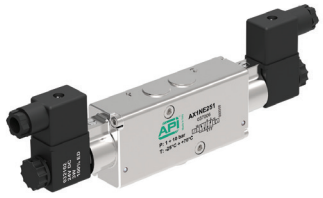

Series of stainless steel spool valves, with Namur interface, size 1/4", in function 5/2 solenoid/solenoid.
Valve body conforming to 2014/34/UE ATEX Directive in classification:
II 2G Ex h IIC T5 Gb
II 2D Ex h IIIC T100°C Db
Coils and connectors to be ordered separately.

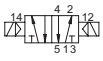

Options

Description		Symbol	Suffix
FKM seals	-10°C ÷ +150°C		**V**
Special versions on request			**/S**

The options, when this is possible, can be combined with each other. For standard options matching see the table below. For code key see from page 5.120.4

Options matching

Series	Size	Function	ATEX	Standard options matching
				V
AX1NE	1/4"	3/2 - 5/2	Standard	●

Key

● allowed matching; - not allowed matching.

Code key

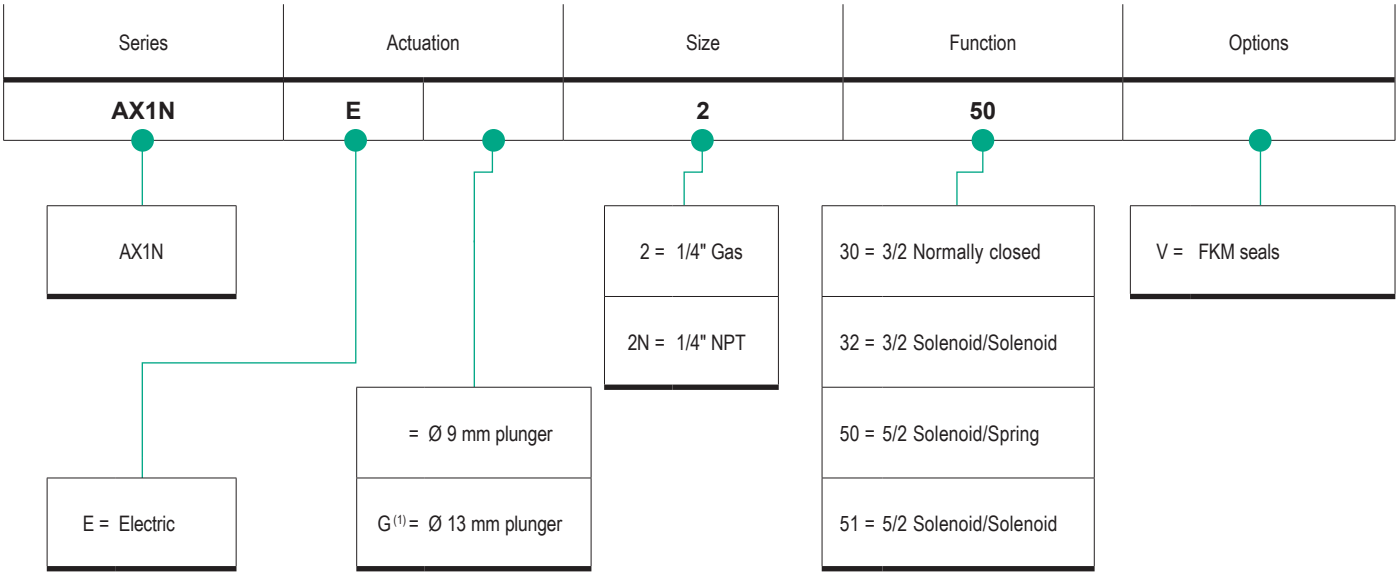

ATEX note

Valves bodies of series AX1N are supplied as standard according to 214/34/EU ATEX Directive, in classification:

II 2G Ex h IIC T5 Gb
II 2D Ex h IIIC T100°C Db

WARNING: by combining an ATEX valve body with a standard coil and/or connector, the resulting solenoid valves will not comply with 2014/34/EU ATEX Directive, in any classification.

For ATEX coils and connectors, see page 5.150.1

For further infomation on the ATEX 2014/34/EU Directive, on classifications and protections, see from page III.1

How to order

Series	Actuation		Size	Function
AX1N	E		2	50

Notes

For standard materials, see page 5.120.5

(1) The actuations with Ø 13 mm plunger (EG) are compatible only with ASA34 coils (with increased voltage) for applications with high working pressures (up to 12 bar).

Coils and connectors to be ordered separately, see page 5.124.1

Standard materials

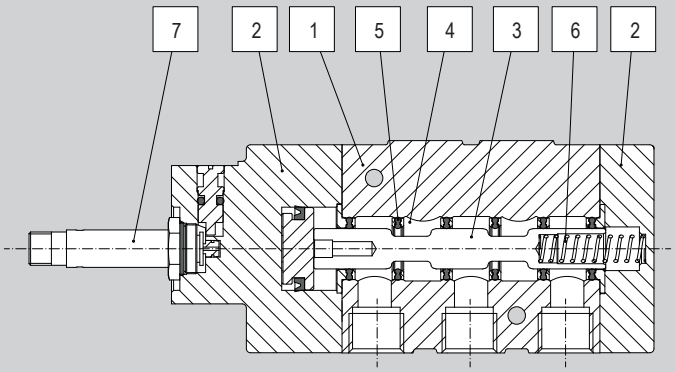

Position	Description	Material	
		1/4"	
		AX1E..	AX1K..
1	Body	Stainless Steel AISI 316L	
2	Covers	Stainless Steel AISI 316L	
3	Spool	Hard anodized aluminium	
4	Distancers	Technopolymer	
5	Seals	HNBR	
6	Spring	Stainless Steel	
7	Plunger	Stainless Steel	

Accessories

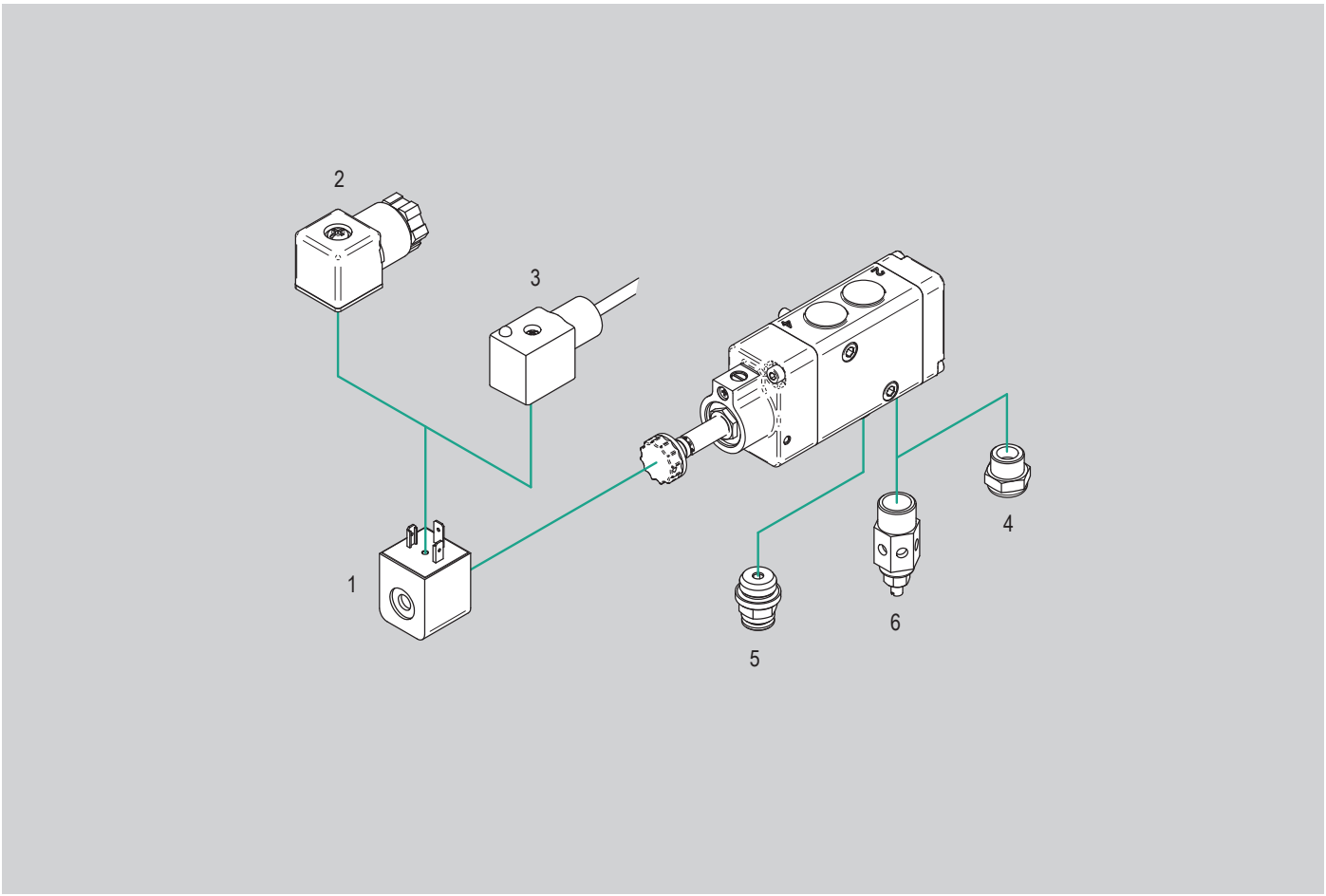

N.	Item	Description	Compliance	Matching		Code key page	Data sheet page
				1/4"			
				AX1NE..	AX1NEG..		
1	ASA12..	Coil	EN60204 VDE0580	●	-	5.124.1	2.315.10
	ASA2..		EN60204.1 VDE0580	●	-		2.315.11
	ASA34..		EN175301-803-A	-	●	2.315.14	
	ASA12../ATEXII3	ATEX coil	2014/34/EU	●	-	5.155.2	
	ASA2../ATEXII2			●	-	5.156.2	
	ASA4../ATEXII2			●	-	5.157.2	
2	A12209..	Connector	VDE 0110-1/89	●	-	5.124.1	2.318.12
	A18209..			●	●		2.318.14
	A122../ATEX	ATEX connector	2014/34/EU	●	-	5.155.3	
3	A12209..K	Cabled connector	VDE 0110-1/89	●	-	5.124.1	2.318.12
	A18209..K			●	●		2.318.14
4	AFEX.. AEX.. AEPX.. AERX	Stainless Steel silencers	-	●	●	5.390.1	
5	RX..	Stainless Steel push-in fittings	UNI ISO 228/1 UNI ISO7/1 ISO R/232	●	●	5.302.1	
5	AVRX..	Stainless Steel silenced regulators	-	●	●	5.375.1	

Key
● matching accessory; - not matching accessory

Stainless Steel NAMUR solenoid operated valves series AX1N

1/4", 3/2 solenoid/spring

Main features

Version	Actuation	Code	Item	Symbol
3/2 Normally closed	Electric Ø9	037029X	AX1NE230	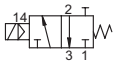
	Electric Ø13	*	AX1NEG230	



Technical data

Version	3/2 Normally closed	
Code	037029X	*
Item	AX1NE230	AX1NEG230
Size	1/4"	
Fluid	Compressed air with or without lubrication. Lubrication, if started, must be continued.	
Pressure range	1,5 ÷ 10 bar	1,5 ÷ 12 bar
Temperature range	-25°C ÷ +70°C (standard) -10°C ÷ +150°C (V)	
Plunger Ø	9 mm	13 mm
Orifice Ø	8 mm	
Flow at 6 bar with ΔP 1 bar	1.100 Nl/min.	
ATEX compliance	II 2G Ex h IIC T5 Gb II 2D Ex h IIIC T100°C Db	
Mounting	In every position	
Manual override	Bistable	

Notes

Coils and connectors to be ordered separately.
For matching between valve body and coils, see page 5.120.6
For coils ASA12, ASA2 and ASA34 (with increased voltage, only for actuation EG) and for connectors A122 and A182 see page 5.124.1
For ATEX coils and connectors see from page 5.150.1

WARNING: by combining the ATEX valve body with a standard coil and/or connector, result in the assembly not to comply with 2014/34/EU ATEX Directive, in any classification

* For code, please contact the sales department

For code and availability of NPT threads, please contact the sales department

Standard dimensions

II 2G Ex h IIC T5 Gb
II 2D Ex h IIIC T100°C Db

Type: **3/2 N.C.**

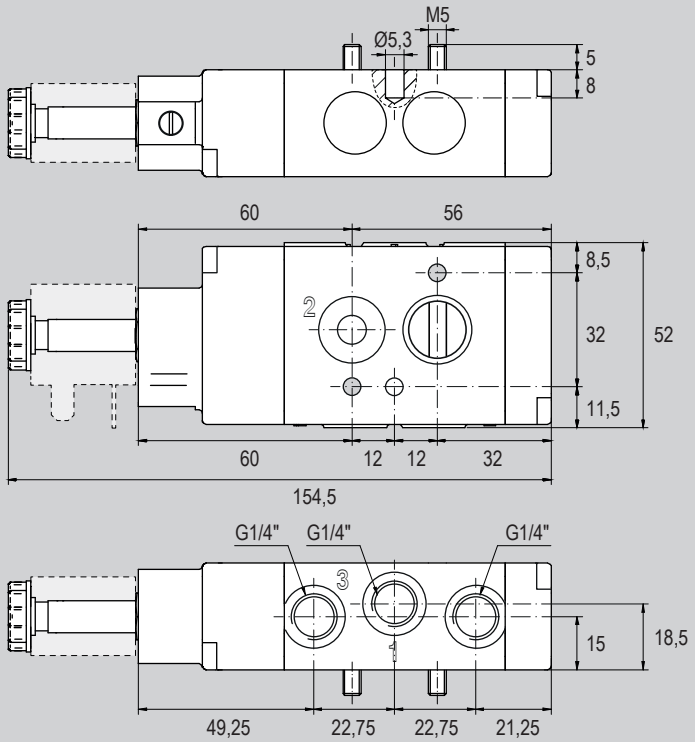

Version	Actuation	Symbol	Code	Item
1/4" 3/2 Normally closed	Electric Ø 9	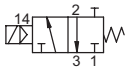	037029X	AX1NE230
	Electric Ø 13		*	AX1NEG230

*For code, please contact the sales department.
For availability and code of versions with NPT threads (AX1NE2N.. and AX1NEG2N..), please contact the sales department.

Stainless Steel NAMUR solenoid operated valves series AX1N

1/4", 3/2 solenoid/solenoid

Main features

Version	Actuation	Code	Item	Symbol
3/2 solenoid/solenoid	Electric Ø9	037030X	AX1NE232	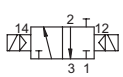
	Electric Ø13	*	AX1NEG232	

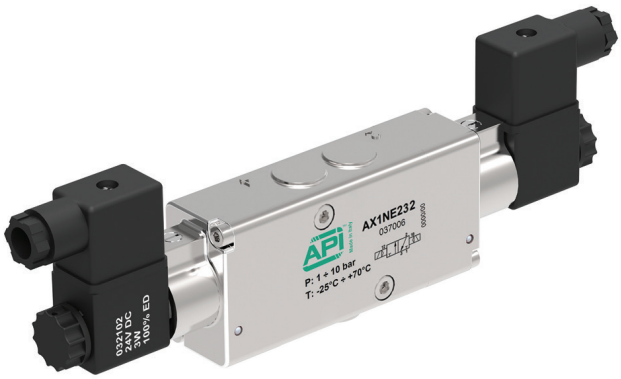

Technical data

Version	3/2 solenoid/solenoid	
Code	037030X	*
Item	AX1NE232	AX1NEG232
Size	1/4"	
Fluid	Compressed air with or without lubrication. Lubrication, if started, must be continued.	
Pressure range	1 ÷ 10 bar	1 ÷ 12 bar
Temperature range	-25°C ÷ +70°C (standard) -10°C ÷ +150°C (V)	
Plunger Ø	9 mm	13 mm
Orifice Ø	8 mm	
Flow at 6 bar with ΔP 1 bar	1.100 Nl/min.	
ATEX compliance	II 2G Ex h IIC T5 Gb II 2D Ex h IIIC T100°C Db	
Mounting	In every position (vertical not reccomended when in presence of vibrations)	
Manual override	Bistable	

Notes

Coils and connectors to be ordered separately.
For matching between valve body and coils, see page 5.120.6
For coils ASA12, ASA2 and ASA34 (with increased voltage, only for actuation EG) and for connectors A122 and A182 see page 5.124.1
For ATEX coils and connectors see from page 5.150.1

WARNING: by combining the ATEX valve body with a standard coil and/or connector, result in the assembly not to comply with 2014/34/EU ATEX Directive, in any classification

* For code, please contact the sales department

For code and availability of NPT threads, please contact the sales department

Standard dimensions

II 2G Ex h IIC T5 Gb
II 2D Ex h IIIC T100°C Db

Type: **3/2 solenoid/solenoid**

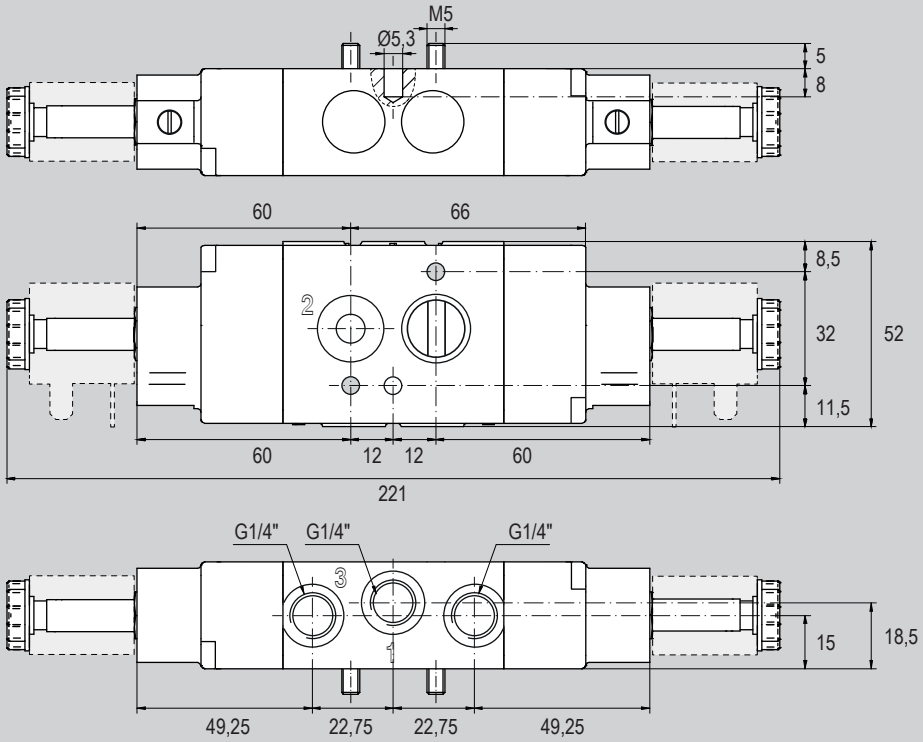

Version	Actuation	Symbol	Code	Item
1/4" 3/2 solenoid/solenoid	Electric Ø 9	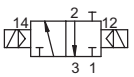	037030X	AX1NE232
	Electric Ø 13		*	AX1NEG232

*For code, please contact the sales department.
For availability and code of versions with NPT threads (AX1NE2N.. and AX1NEG2N..), please contact the sales department.

Stainless Steel NAMUR solenoid operated valves series AX1N

1/4", 5/2 solenoid/spring

Main features

Version	Actuation	Code	Item	Symbol
5/2 solenoid/spring	Electric Ø9	037008X	AX1NE250	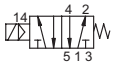
	Electric Ø13	*	AX1NEG250	



Technical data

Version	5/2 solenoid/spring	
Code	037008X	*
Item	AX1NE250	AX1NEG250
Size	1/4"	
Fluid	Compressed air with or without lubrication. Lubrication, if started, must be continued.	
Pressure range	1,5 ÷ 10 bar	1,5 ÷ 12 bar
Temperature range	-25°C ÷ +70°C (standard) -10°C ÷ +150°C (V)	
Plunger Ø	9 mm	13 mm
Orifice Ø	8 mm	
Flow at 6 bar with ΔP 1 bar	1.100 Nl/min.	
ATEX compliance	II 2G Ex h IIC T5 Gb II 2D Ex h IIIC T100°C Db	
Mounting	In every position	
Manual override	Bistable	

Notes

Coils and connectors to be ordered separately.
For matching between valve body and coils, see page 5.120.6
For coils ASA12, ASA2 and ASA34 (with increased voltage, only for actuation EG) and for connectors A122 and A182 see page 5.124.1
For ATEX coils and connectors see from page 5.150.1

WARNING: by combining the ATEX valve body with a standard coil and/or connector, result in the assembly not to comply with 2014/34/EU ATEX Directive, in any classification

* For code, please contact the sales department

For code and availability of NPT threads, please contact the sales department

Standard dimensions

II 2G Ex h IIC T5 Gb
II 2D Ex h IIIC T100°C Db

Type: **5/2 solenoid/spring**

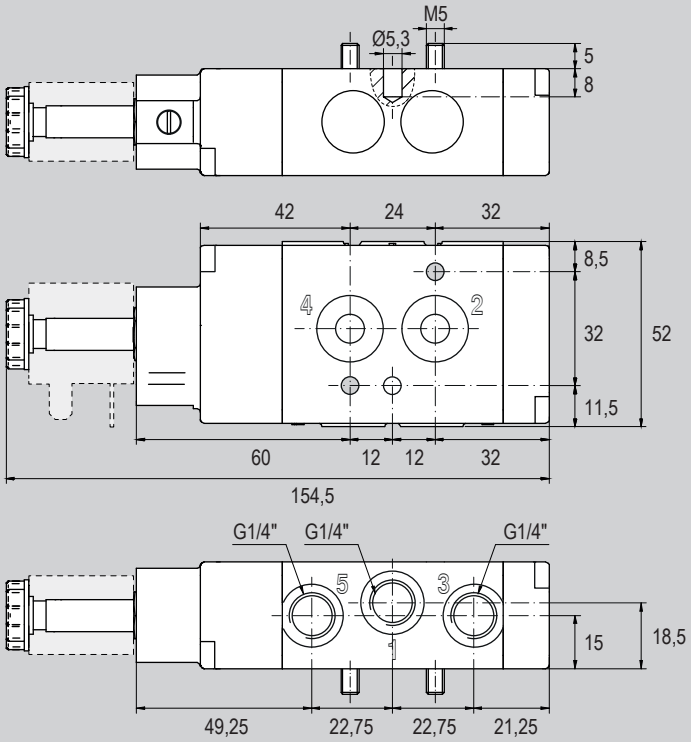

Version	Actuation	Symbol	Code	Item
1/4" 5/2 solenoid/spring	Electric Ø 9	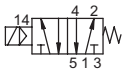	037008X	AX1NE250
	Electric Ø 13		*	AX1NEG250

*For code, please contact the sales department.
For availability and code of versions with NPT threads (AX1NE2N.. and AX1NEG2N..), please contact the sales department.

Stainless Steel NAMUR solenoid operated valves series AX1N

1/4", 5/2 solenoid/solenoid

Main features

Version	Actuation	Code	Item	Symbol
5/2 solenoid/solenoid	Electric Ø9	037031X	AX1NE251	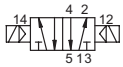
	Electric Ø13	*	AX1NEG251	

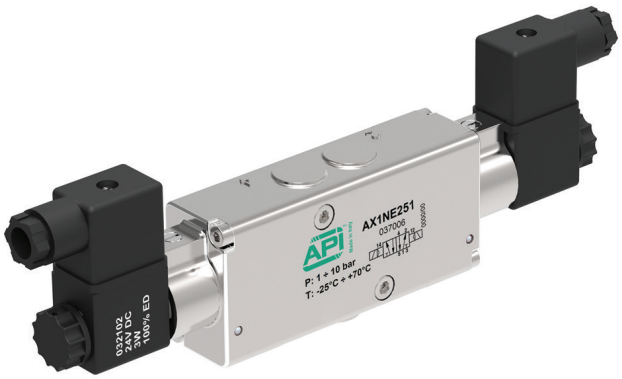

Technical data

Version	5/2 solenoid/solenoid	
Code	037031X	*
Item	AX1NE251	AX1NEG251
Size	1/4"	
Fluid	Compressed air with or without lubrication. Lubrication, if started, must be continued.	
Pressure range	1 ÷ 10 bar	1 ÷ 12 bar
Temperature range	-25°C ÷ +70°C (standard) -10°C ÷ +150°C (V)	
Plunger Ø	9 mm	13 mm
Orifice Ø	8 mm	
Flow at 6 bar with ΔP 1 bar	1.100 Nl/min.	
ATEX compliance	II 2G Ex h IIC T5 Gb II 2D Ex h IIIC T100°C Db	
Mounting	In every position (vertical not reccomended when in presence of vibrations)	
Manual override	Bistable	

Notes

Coils and connectors to be ordered separately.
For matching between valve body and coils, see page 5.120.6
For coils ASA12, ASA2 and ASA34 (with increased voltage, only for actuation EG) and for connectors A122 and A182 see page 5.124.1
For ATEX coils and connectors see from page 5.150.1

WARNING: by combining the ATEX valve body with a standard coil and/or connector, result in the assembly not to comply with 2014/34/EU ATEX Directive, in any classification

* For code, please contact the sales department

For code and availability of NPT threads, please contact the sales department

Standard dimensions

II 2G Ex h IIC T5 Gb
II 2D Ex h IIIC T100°C Db

Type: **5/2 solenoid/solenoid**

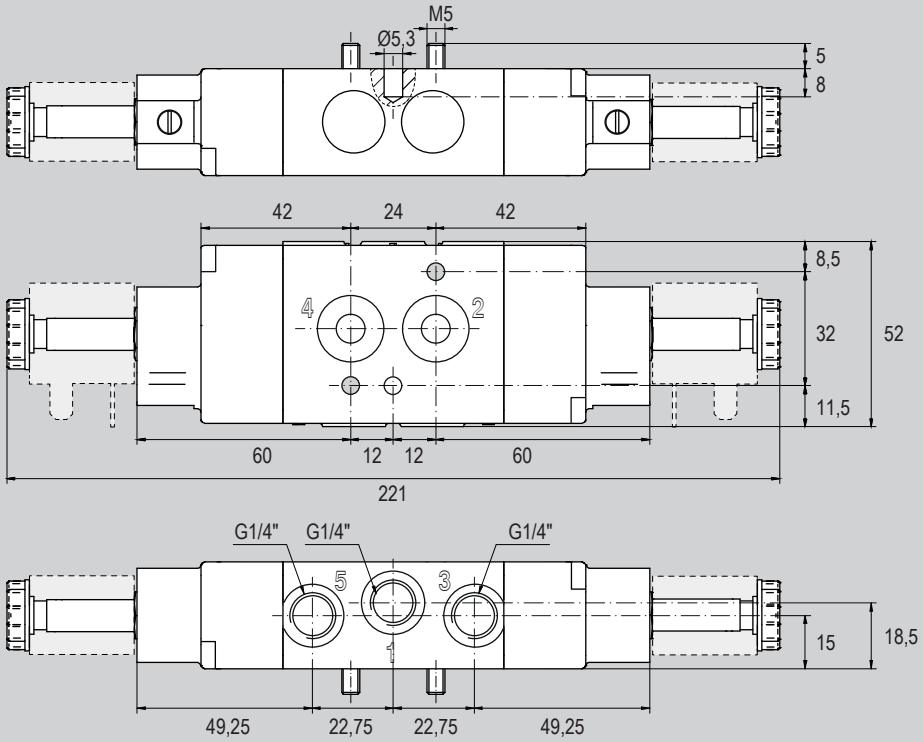

Version	Actuation	Symbol	Code	Item
1/4" 5/2 solenoid/solenoid	Electric Ø 9	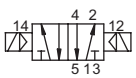	037031X	AX1NE251
	Electric Ø 13		*	AX1NEG251

*For code, please contact the sales department.
For availability and code of versions with NPT threads (AX1NE2N.. and AX1NEG2N..), please contact the sales department.

Coils ASA12..



Voltage	Code	Item	Matching
12V DC	032100	ASA1201200	AX1NE
12V AC	032101	ASA1201250	
24V DC	032102	ASA1202400	
24V AC	032103	ASA1202450	
48V AC	032104	ASA1204850	
110V AC	032105	ASA1211050	
230V AC	032106	ASA1223050	

Coils ASA2..



Voltage	Code	Item	Matching
12V DC	032109	ASA201200	AX1NE
12V AC	032110	ASA201250	
24V DC	032111	ASA202400	
24V AC	032112	ASA202450	
48V AC	032113	ASA204850	
110V AC	032114	ASA211050	
230V AC	032115	ASA223050	

Coils ASA34..



Voltage	Code	Item	Matching
24V DC	034341	ASA3402400	AX1NEG
24V AC	034340	ASA3402450	
110V AC	034342	ASA3411050	
240V AC	034343	ASA3424050	

Connectors A122..(1)



Code	Item	Version
032118	A12209N	Black standard
033521	A12209NK	Black standard cabled
032204	A12209T1	LED+VDR transparent 24VAC-DC
032205	A12209T2	LED+VDR transparent 115VAC-DC
032206	A12209T3	LED+VDR transparent 230VAC-DC
033522	A12209N1K	LED+VDR black cabled 24VAC-DC
033523	A12209N2K	LED+VDR black cabled 115VAC-DC
033524	A12209N3K	LED+VDR black cabled 230VAC-DC

(1) For coils type ASA12

Connectors A182..(2)



Code	Item	Version
032119	A18209N	Black standard
033531	A18209NK	Black standard cabled
032207	A18209T1	LED+VDR transparent 24VAC-DC
032208	A18209T2	LED+VDR transparent 115VAC-DC
032209	A18209T3	LED+VDR transparent 230VAC-DC
033532	A18209N1K	LED+VDR black cabled 24VAC-DC
033533	A18209N2K	LED+VDR black cabled 115VAC-DC
033534	A18209N3K	LED+VDR black cabled 230VAC-DC

(2) For coils type ASA2 e ASA34

Notes

STAINLESS STEEL

solenoid operated valves, ATEX coils and connectors



Find out our
key products

- **Solution for most applications**
- **Easy and intuitive choice**
- **Excellent value for money**
- **Wide availability**
- **Fast delivery**

Features and certifications

Stainless steel solenoid operated valves for applications in potentially explosive atmospheres.
These solenoid operated vavles, fully made in stainless steel, are supplied complete and already assembled with coil and connector, and conforming to 2014/34/EU Directive, available in classification Ex ia (intrinsic safety coil) or Ex d (explosion proof coil).
They are also compliant with Reach and RoHS directives, and SIL certifcated.

Complete stainless steel solenoid operated valves conforming to ATEX Ex ia (valve body mounted with intrinsic safe coil) type XA from page 5.151.1

Stainless steel solenoid operated valves supplied complete and already mounted, composed by the desired valve body, 30 mm Ex ia intrinsic safety coil (voltage 21.6 ÷ 28 V DC) and compatible connector.
Conforming to 2014/34/EU ATEX Directive for applications in potentially explosive atmospheres, Group II, cat. 2 Gas & Powders, temperature class T6, protection grade IP65.
Ex ia coil can be matched with valve bodies series AX1E and series AX1NE.




Complete stainless steel solenoid operated valves conforming to ATEX Ex ia (valve body mounted with intrinsic safe coil) type XA1 from page 5.151.1

Stainless steel solenoid operated valves supplied complete and already mounted, composed by the desired valve body, 30 mm Ex ia intrinsic safety coil (voltage 21.6 ÷ 28 V DC) and compatible connector.
Conforming to 2014/34/EU ATEX Directive for applications in potentially explosive atmospheres, Group II, cat. 2 Gas & Powders, temperature class T4, protection grade IP65.
Ex ia coil can be matched with valve bodies series AX1E and series AX1NE.




Complete stainless stell solenoid operated valves conforming to ATEX Ex d (valve body mounted with explosion proof coil) type XC from page 5.152.1

Stainless steel solenoid operated valves supplied complete and already mounted, composed by the desired valve body and explosion proof coil Ex d with integrated pilot, available in different voltages. Conforming to 2014/34/EU ATEX Directive for applications in potentially explosive atmospheres, Group II, cat. 2 Gas , temperature class T6.
Ex d coil can be matched with valve bodies series AX1E and series AX1NE.




Stainless steel solenoid operated valves, ATEX coils and connectors

Coils and connectors supplied separately

Caratteristiche e certificazioni

Coils and connectors to be combined with stainless steel valve bodies for the configuration of solenoid operated valves suitable for applications in potentially explosive atmospheres. The solenoid valves configured in this way comply with the ATEX directive 2014/34/EU, in classification Ex ec (increased safety coil), Ex db mb (explosion proof encapsulated coil) or Ex mb (encapsulated coil). They are also compliant with Reach and RoHS directives and SIL certified.
Stainless steel valve bodies, coils and connectors are to be ordered separately.

Coils and connectors conforming to ATEX Ex ec (to be configured combining valve body with increased safety coil and connector) from page 5.155.1

Solenoid operated valves to be configured by combining the desired stainless steel valve body with increased safety coil Ex ec type ASA12/ATEXII3 size 22 mm (available in various voltages) and connector type A12209N/ATEX size 22 mm.
Thus configured, the solenoid operated valve comply with 2014/34/EU ATEX Directive for applications in potentially explosive atmospheres Group II, category 3 Gas and dust, temperature class T5, protection grade IP65.
Stainless steel valve bodies, coils and connectors are be ordered separately.



Coils conforming to ATEX Ex db mb (to be configured combining valve body with explosion proof encapsulated coil) from page 5.156.1

Solenoid operated valves to be configured by combining the desired stainless steel valve body with explosion proof encapsulated coil Ex db mb type ASA4/ATEXII2 size 36 mm with integrated connector.
Thus configured, the solenoid operated valve comply with 2014/34/EU ATEX Directive for applications in potentially explosive atmospheres Group II, category 2 Gas and dust, temperature class T5, protection grade IP66.
Stainless steel valve bodies, coils and connectors are be ordered separately.



Coils conforming to ATEX Ex mb (to be configured combining valve body with encapsulated coil) from page 5.157.1

Solenoid operated valves to be configured by combining the desired stainless steel valve body with encapsulated coil Ex mb type ASA2/ATEXII2 size 30 mm with integrated cabled connector (cable length 2 m) available in different voltages.
Thus configured, the solenoid operated valve comply with 2014/34/EU ATEX Directive for applications in potentially explosive atmospheres Group II, category 2 Gas and dust, temperature class T5, protection grade IP66.
Stainless steel valve bodies, coils and connectors are be ordered separately.



Types and configurations

Solenoid valve	Classification	Coil/Connector	Configuration
Ex ia (type XA)	CE Ex II 2G Ex ia IIC T6 Gb II 2D Ex tb IIIC T80°C Db X IP65		Stainless steel solenoid operated valve supplied complete with Ex ia intrinsically safe coil and connector mounted, type XA. For combination with stainless steel valve body see the table below; For code key see page 5.150.6; For dimensions see from page 5.150.7
Ex ia (type XA1)	CE Ex II 2G Ex ia IIC T4 Gb II 2D Ex tb IIIC T130°C Db X IP65		Stainless steel solenoid operated valve supplied complete with Ex ia intrinsically safe coil and connector mounted, type XA1. For combination with stainless steel valve body see the table below; For code key see page 5.150.6; For dimensions see from page 5.150.7
Ex d (type XC)	CE Ex II 2G Ex db IIC T6 Gb		Stainless steel solenoid operated valve supplied complete with Ex d explosion proof coil with integrated pilot mounted, type XC. For combination with stainless steel valve body see the table below; For code key see page 5.150.6; For dimensions see from page 5.150.9

Matching coil/connector with valve body

Coil/Connector		II 2G Ex ia IIC T6 Gb II 2D Ex tb IIIC T80°C Db IP65 	II 2G Ex ia IIC T4 Gb II 2D Ex tb IIIC T130°C Db IP65 	II 2G Ex db IIC T6 Gb 
Valve body	Size	Supplied already mounted with valve body	Supplied already mounted with valve body	Supplied already mounted with valve body
AX1E	1/4"	●	●	●
AX1EG	1/4"	-	-	-
A1K	1/4"	●	●	●
AX1KG	1/4"	-	-	-
AX1NE	1/4"	●	●	●
AX1NEG	1/4"	-	-	-

Key

● allowed matching; - not allowed matching

Stainless steel solenoid operated valves, ATEX coils and connectors

Coils and connectors supplied separately

Types and configurations

Solenoid valve type	Classification	Coil/Connector	Configuration
EX ec	CE Ex II 3G Ex ec IIC T5 Gc II 3D Ex tc IIIC T95°C Dc IP65		To configure the stainless steel solenoid valve, combine: • desired stainless steel valve body, see from page 5.102.1 (for valves series AX1) and from page 5.120.1 (for valves series AX1N); • coil type ASA12/ATEXII3, see page 5.155.2; • connector type A12209N/ATEX, see page 5.155.3;
EX db mb	CE Ex II 2G Ex db mb IIC T5 Gb II 2D Ex tb IIIC T95°C Db IP66		To configure the stainless steel solenoid valve, combine: • desired stainless steel valve body, see from page 5.102.1 (for valves series AX1) and from page 5.120.1 (for valves series AX1N); • coil type ASA4/ATEXII2 (with integrated connector), see page 5.156.2;
EX mb	CE Ex II 2G Ex mb IIC T5 Gb II 2D Ex tb IIIC T95°C Db IP66		To configure the stainless steel solenoid valve, combine: • desired stainless steel valve body, see from page 5.102.1 (for valves series AX1) and from page 5.120.1 (for valves series AX1N); • coil type ASA2/ATEXII2 (with 2 mt. cabled connector integrated), see page 5.157.2;

Matching coil/connector with valve body

Coil/Connector		II 3G Ex ec IIC T5 Gc II 3D Ex tc IIIC T95°C Dc IP65 		II 2G Ex db mb IIC T5 Gb II 2D Ex tb IIIC T95°C Db IP66 	II 2G Ex mb IIC T5 Gb II 2D Ex tb IIIC T95°C Db IP66 
Valve body	Size	ASA12/ATEXII3 (coil)	A12209N/ATEX (connector)	ASA4/ATEXII2 (coil with integrated connector)	ASA2/ATEXII2 (coil with integrated cabled connector)
AX1E	1/4"	●	●	●	●
AX1EG	1/4"	-	-	-	-
A1K	1/4"	●	●	●	●
AX1KG	1/4"	-	-	-	-
AX1NE	1/4"	●	●	●	●
AX1NEG	1/4"	-	-	-	-

Key

● allowed matching; - not allowed matching

Notes

Stainless steel solenoid operated valves, ATEX coils and connectors

Complete stainless steel solenoid operated valves type XA - XA1, intrinsic safety Ex ia

Main features

Stainless steel solenoid operated valves supplied complete and already mounted, composed by the desired valve body, 30 mm Ex ia intrinsic safety coil (voltage 21.6 ÷ 28 V DC) and relevant connector.

The Ex ia coil (and its connector) can be matched with:
- stainless steel valve bodies series AX1E size 1/4" and 1/2", electric actuated, also with external air pilot;

- stainless steel valve bodies series AX1NE size 1/4", electric actuated;

These stainless steel solenoid valve are available in two different ATEX classification:

Type XA is conforming to 2014/34/UE ATEX Directive suitable for applications in potentially explosive atmospheres, Group II, cat. 2 Gas & Powders, temperature class T6, protection grade IP65.

Type XA1 is conforming to 2014/34/UE ATEX Directive for applications in potentially explosive atmospheres, Group II, cat. 2 Gas & Powders, temperature class T4, protection grade IP65.

For code key see from page 5.151.2

For dimensions see from page 5.151.3

For further information on the ATEX 2014/34/EU Directive, on classifications and protections, see from page III.1





II 2G Ex ia IIC T6 Gb
II 2D Ex tb IIIC T80°C Db IP65 — XA

II 2G Ex ia IIC T4 Gb
II 2D Ex tb IIIC T130°C Db IP65 — XA1

Technical data

Solenoid valve		type XA	type XA1
ATEX classification		II 2G Ex ia IIC T6 Gb II 2D Ex tb IIIC T80°C Db IP65	II 2G Ex ia IIC T4 Gb II 2D Ex tb IIIC T130°C Db IP65
Protection	Gas	Ex ia	
	Dust	Ex tb	
Protection grade		IP65	
Fluid		Compressed air with or without lubrication. Lubrication, if started, must be continued.	
Pressure range	Solenoid/Spring	2,5 ÷ 8 bar	
	Solenoid/Solenoid	1 ÷ 8 bar	
	3 positions	2,5 ÷ 8 bar	
Temperature range	Standard	-25°C ÷ +60°C	-25°C ÷ +50°C

Standard materials

Solenoid valve		type XA	type XA1
Plunger		Brass	
Coil		Thermoset resin	
Connector		Thermoset resin	
Valve body	AX1E AX1K	See page 5.102.5	
	AX1NE	See page 5.120.5	

Electrical features ATEX coil/connector

Nominal Voltage	Frequency	Nominal current	Nominal power	Duty cycle	Temperature class	Standard voltage	Suffix	ATEX Classification	Coil/Connector
21.6 ÷ 28 V DC	-	0.115 A (@ 28VDC)	1.6 W (@ 28VDC)	100% ED	T6	●	C	II 2G Ex ia IIC T6 Gb II 2D Ex tb IIIC T80°C Db IP65	XA
21.6 ÷ 28 V DC		0.115 A (@ 28VDC)	1.6 W (@ 28VDC)	100% ED	T4	●	C	II 2G Ex ia IIC T4 Gb II 2D Ex tb IIIC T130°C Db IP65	XA1



Key

● standard voltage

Code key solenoid valves ATEX complete with coils and connectors

Series	Actuation	Size	Function	ATEX coil	Voltage
AX1	**E**	**2**	**50**	**XA**	**C**

- Series
  - AX1 = In linea
  - AX1N (1) = Namur
- Actuation
  - E = Electric
  - K (2) = Electric with external air pilot
- Size
  - 2 = 1/4" Gas
  - 2N = 1/4" NPT
- Function
  - 30 = 3/2 Normally closed
  - 31 = 3/2 Normally open
  - 32 = 3/2 Solenoid/Solenoid
  - 50 = 5/2 Solenoid/Spring
  - 51 = 5/2 Solenoid/Solenoid
  - 52 = 5/2 Solenoid/Solenoid differential
  - 70 = 5/3 Closed Centres
  - 71 = 5/3 Open Centres
  - 72 = 5/3 Pressurized Centres
- ATEX coil
  - XA = CE Ex II 2G Ex ia IIC T6 Gb II 2D Ex tb IIIC T80°C Db IP65
  - XA1 = CE Ex II 2G Ex ia IIC T4 Gb II 2D Ex tb IIIC T130°C Db IP65
- Voltage
  - See table at page 5.151.1

How to order

Series	Actuation	Size	Function	Atex coil	Voltage
AX1	**E**	**2**	**50**	**XA**	**C**

Notes

For standard material of valve body series AX1 see page 5.102.5
For standard material of valve body series AX1N see page 5.122.5
For standard materials of coils and connectors see page 5.151.1

(1) Valves series AX1N available only with electric actuation (E) in functions 3/2 N.C. (30), 3/2 solenoid/solenoid (32), 5/2 solenoid/spring (50), and 5/2 solenoid/solenoid (51).

(2) Electric actuation with external air pilot (K) is available only for series AX1 in functions 3/2 N.C. (30), 3/2 solenoid/solenoid (32), 5/2 solenoid/spring (50), 5/2 solenoid/solenoid (51), 5/3 closed centres (70), 5/3 open centres (71) and 5/3 pressurized centres (72).

For further infomation on the ATEX 2014/34/EU Directive, on classifications and protections, see from page III.1

Dimensions coil and connector series XA and XA1 with stainless steel valves body series AX1E e AX1K (1/4")

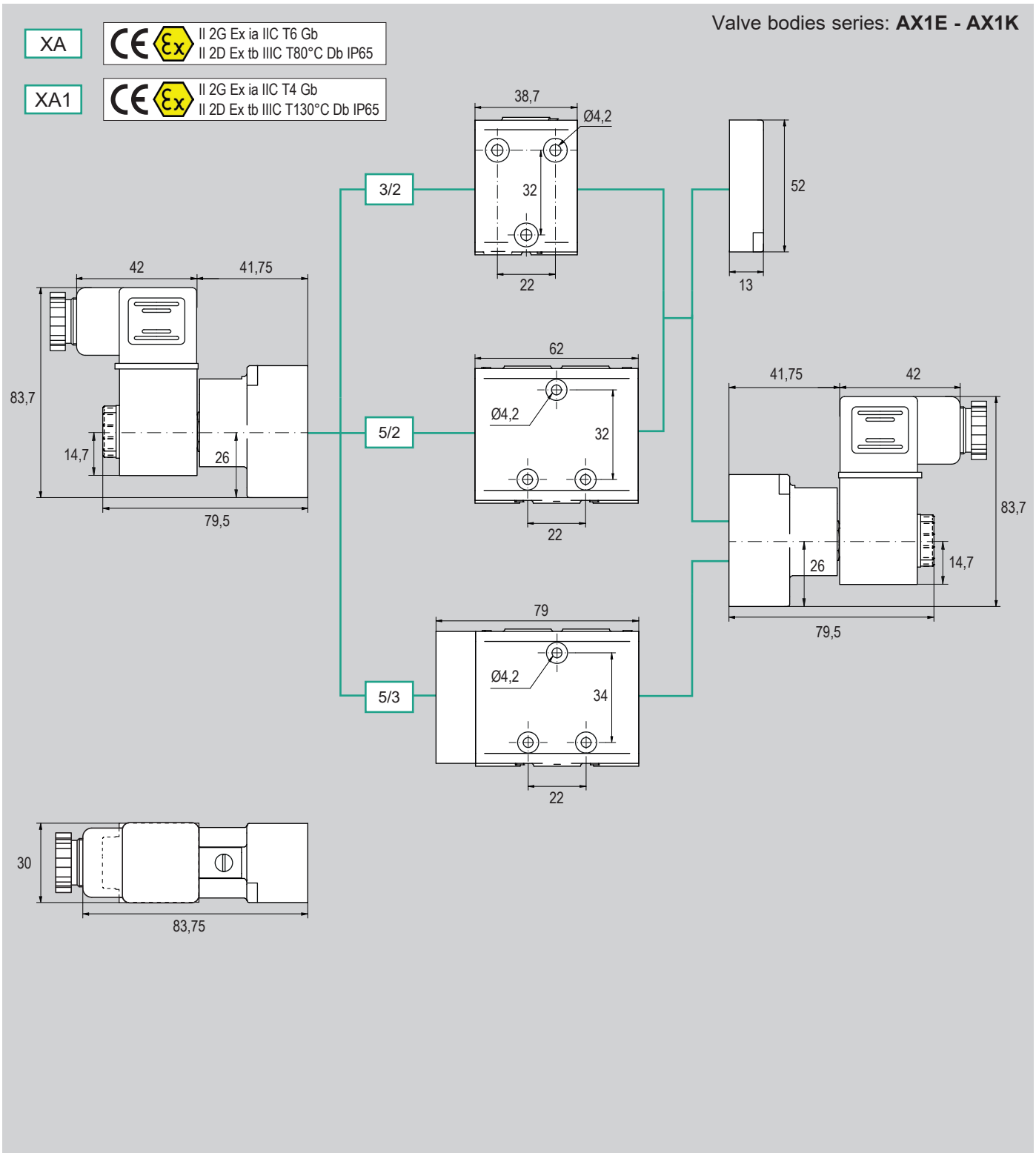

For further infomation on features of valve body series AX1E2 and AX1K2 (1/4"), see from page 5.105.10

Dimensions coil and connector series XA and XA1 with stainless steel valves body series AX1NE (1/4")

Valve series: **AX1NE**

XA — II 2G Ex ia IIC T6 Gb
II 2D Ex tb IIIC T80°C Db IP65

XA1 — II 2G Ex ia IIC T4 Gb
II 2D Ex tb IIIC T130°C Db IP65

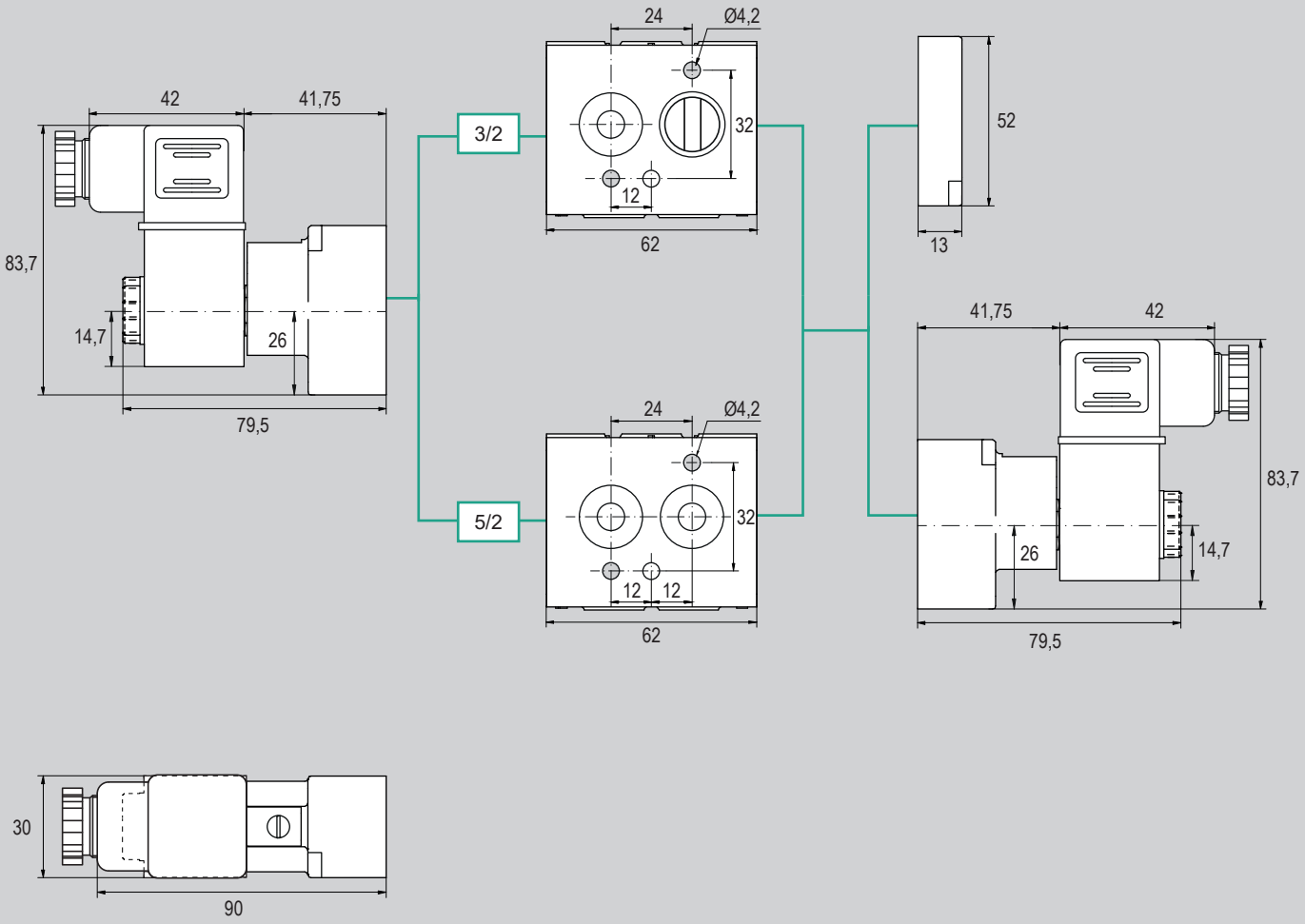

For further infomation on features of valve body series AX1NE2 (1/4"), see from page 5.122.10

Stainless steel solenoid operated valves, ATEX coils and connectors

Complete stainless steel solenoid operated valves type XC, explosion proof coil Ex d

Main features

Stainless steel solenoid operated valves supplied complete and already mounted, composed by the desired valve body and Ex d explosion proof coil with integrated pilot.

The Ex d coil can be matched with:
- valve bodies series AX1E size 1/4", electric actuated;
- valve bodies series AX1NE size 1/4", electric actuated.

Type XC is conforming to 2014/34/EU ATEX Directive suitable for applications in potentially explosive atmospheres, Group II, cat. 2 Gas, temperature class T6.

For code key see page 5.152.2

For dimensions see from page 5.152.3

For further information on the ATEX 2014/34/EU Directive, on classifications and protections, see from page III.1

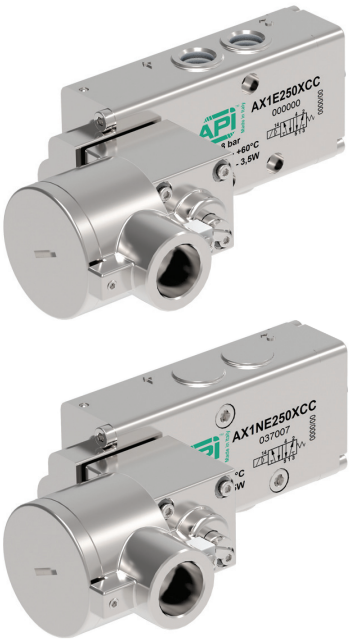

II 2G Ex db IIC T6 Gb

XC

Technical data

Elettrovalvola		tipo XC
ATEX classification		II 2G Ex db IIC T6 Gb
Protection	Gas	Ex db
	Dust	-
Protection grade		-
Fluid		Compressed air with or without lubrication. Lubrication, if started, must be continued.
Pressure range	Solenoid/Spring	2,5 ÷ 8 bar
	Solenoid/Solenoid	1 ÷ 8 bar
	3 positions	2,5 ÷ 8 bar
Temperature range	Standard	-20°C ÷ +60°C

Standard materials

Elettrovalvola		tipo XC
Plunger		Stainless Steel AISI 316L
Coil		
Connector		
Valve body	AX1E	See page 5.102.5
	AX1NE	See page 5.120.5

Electrical features ATEX coil/connector

Nominal Voltage	Frequency	Nominal current	Nominal power	Duty cycle	Temperature class	Standard voltage	Suffix	ATEX Classification	Coil/Connector
12 VDC	-	-	3.5 W	100% ED	T6	-	**B**	II 2G Ex db IIC T6 Gb	XC 
24 VDC						●	**C**		
24VAC	50 / 60 Hz		4 VA			●	**F**		
110 VAC						-	**I**		
120 VAC						●	**M**		
220 VAC						●	**O**		
240 VAC						-	**Q**		

Key

● standard voltage; – voltage available on request (please contact our sales department)

Code key solenoid valves ATEX complete with coils and connectors

Series	Actuation	Size	Function	ATEX coil	Voltage
AX1	E	2	50	XC	C

- Series
  - AX1 = In linea
  - AX1N (1) = Namur
- Actuation
  - E = Electric
- Size
  - 2 = 1/4" Gas
  - 2N = 1/4" NPT
- Function
  - 30 = 3/2 Normally closed
  - 31 = 3/2 Normally open
  - 32 = 3/2 Solenoid/Solenoid
  - 50 = 5/2 Solenoid/Spring
  - 51 = 5/2 Solenoid/Solenoid
  - 52 = 5/2 Solenoid/Solenoid differential
  - 70 = 5/3 Closed Centres
  - 71 = 5/3 Open Centres
  - 72 = 5/3 Pressurized Centres
- ATEX coil
  - XC = CE Ex II 2G Ex db IIC T6 Gb
- Voltage
  - See table at page 5.152.1

How to order

Series	Actuation	Size	Function	Atex coil	Voltage
AX1	E	2	50	XA	C

Notes

For standard material of valve body series AX1 see page 5.102.5
For standard material of valve body series AX1N see page 5.122.5
For standard materials of coils see page 5.152.1

(1) Valves series AX1N available only in functions 3/2 N.C. (30), 3/2 solenoid/solenoid (32), 5/2 solenoid/spring (50), and 5/2 solenoid/solenoid (51).

For further infomation on the ATEX 2014/34/EU Directive, on classifications and protections, see from page III.1

Dimensions stainless steel coil series XC with stainless steel valves body series AX1E (1/4")

XC

II 2G Ex db IIC T6 Gb

Valve series: **AX1E**

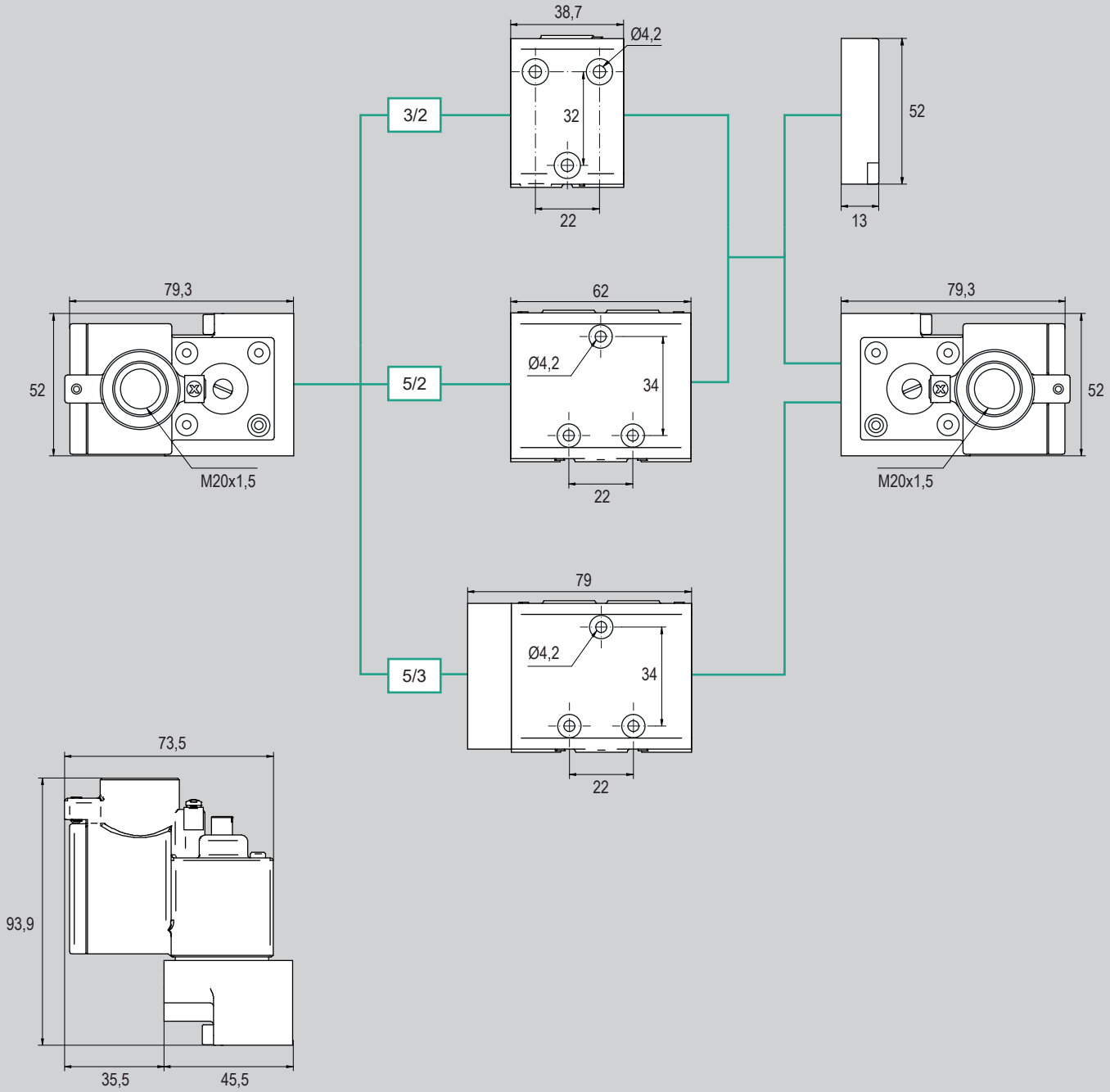

For further infomation on features of valve body series AX1E2 (1/4"), see from page 5.105.10

Dimensions stainless steel coil series XC with stainless steel valves body series AX1NE (1/4")

XC

II 2G Ex db IIC T6 Gb

Valve series: **AX1NE**

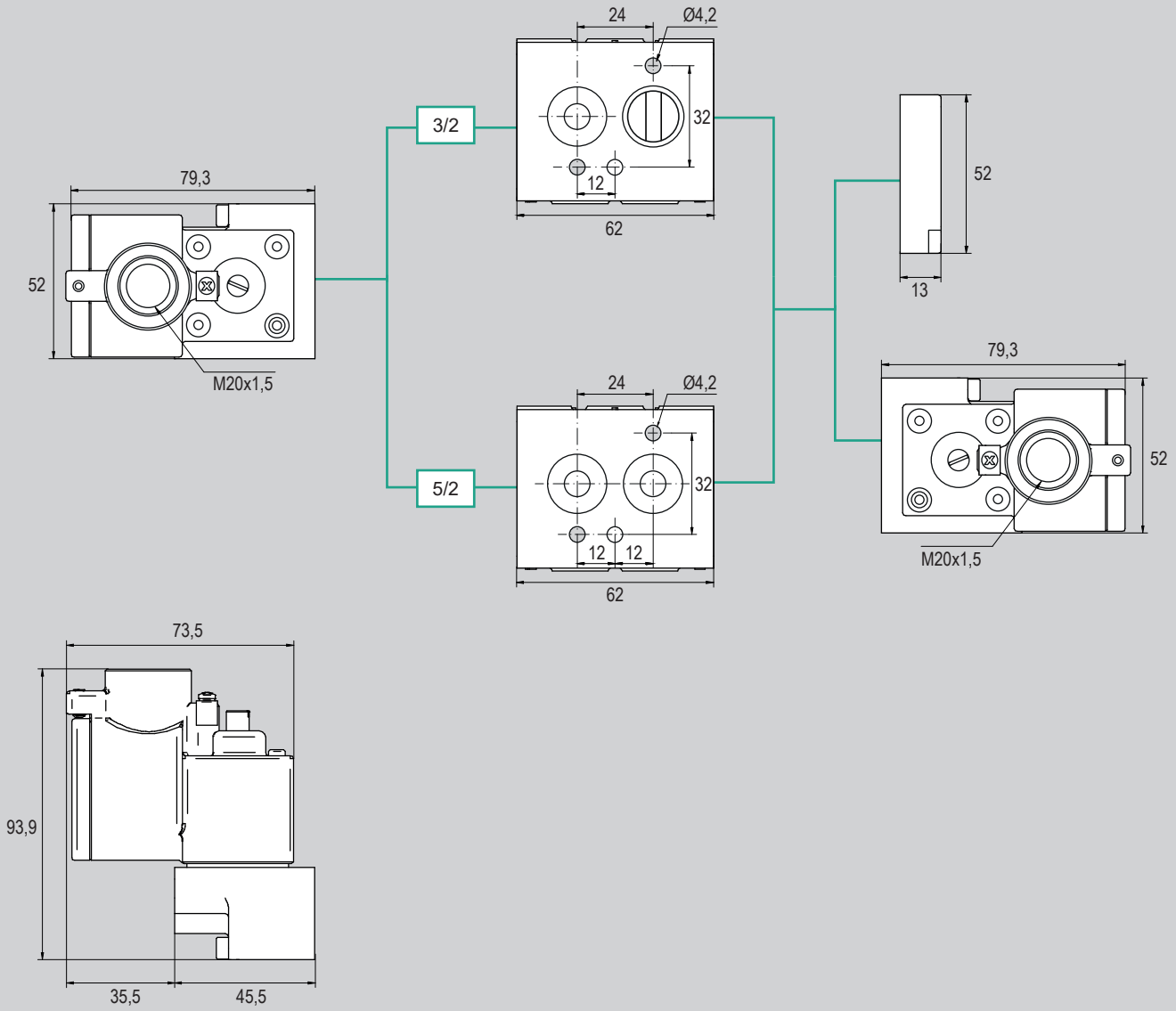

For further infomation on features of valve body series AX1NE2 (1/4"), see from page 5.122.10

Stainless steel solenoid operated valves, ATEX coils and connectors

Coils and connectors supplied separately, increased safety Ex ec

Main features

Stainless steel solenoid operated valves conforming to ATEX Ex ec (increased safety), to be configured combining stainless steel valve body with coil type ASA12/ATEXII3 and connector type A12209N/ATEX.

Stainless steel valve body, coil and connector are supplied separetely and not mounted.

The configuration require to order the stainless steel valve body of desired size and function (see the relevant code key of each series), the 22 mm coil type ASA12/ATEXII3 (available in different voltages) and the 22 mm connector type A12209N/ATEX, as shown in the "how to order" table below.

For mathcing between stainless steel valve body, coil and connector, please see page 5.150.5

For technical data and for dimensions of the stainless steel valve body, please refere to the relevant pages of each series.
For technical data and for dimensions of the coil type ASA12/ATEXII3 see page 5.155.2
For technical data and for dimensions of the connector type A12209N/ATEX see page 5.155.3

ATEX compliance

The abovementioned components, while assembled, makes a stainless steel solenoid operated valve conforming to 2014/34/EU ATEX Directive, in classification Ex ec, suitable for application in potentially explosive atmospheres Group II, cat. 3 Gas & Powders, temperature class T5, protection grade IP65, with the following marking:

II 3G Ex ec IIC T5 Gc
II 3D Ex tc IIIC T95°C Dc IP65

For further information on the ATEX 2014/34/EU Directive, on classifications and protections, see from page III.1

How to order

Valve body series	Actuation	Size	Function	ATEX body option
AX1	E	2	50	/ATEX

Coil series	Size	Voltage	ATEX compliance
ASA	12	024 00	/ATEXII3

Connector series	Size	Voltage	Color	ATEX compliance
A	122	09	1	/ATEX

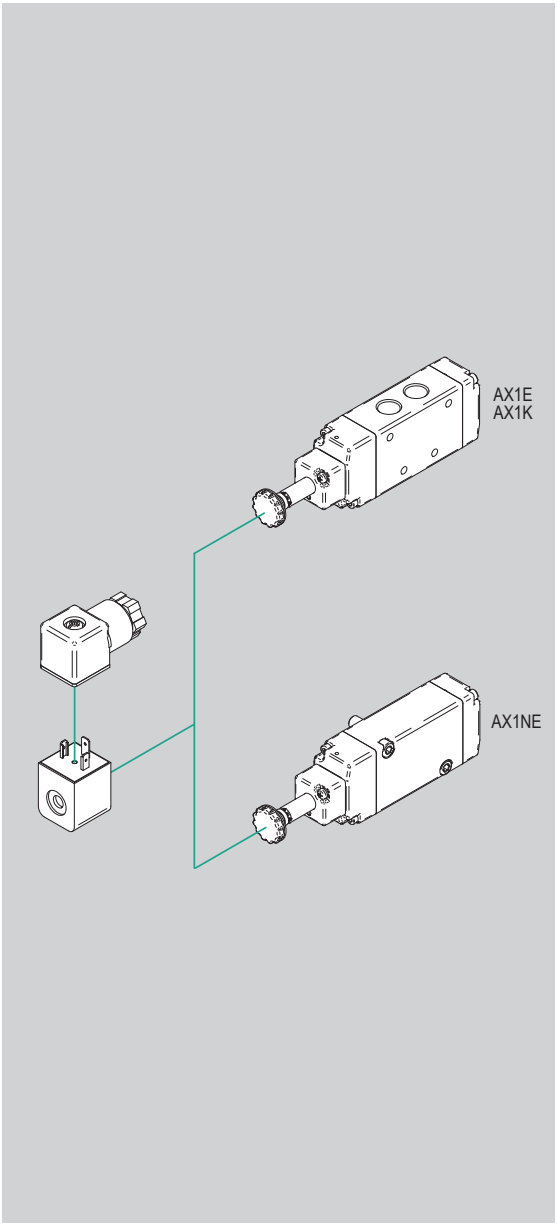

Valve body technical data, dimensions and materials

Technical data, dimensions and materials of the stainless steel valve bodies are the same of the standard stainless steel valve body.
For further information, please see the relevant pages, as indicated in the table below.

Series	Size	Technical data					Dimensions					Standard materials
		3/2 sol./spring	3/2 sol./sol.	5/2 sol./spring	3/2 sol./sol.	5/3	3/2 sol./spring	3/2 sol./sol.	5/2 sol./spring	3/2 sol./sol.	5/3	
AX1E	1/4"	5.105.10	5.105.20	5.105.40	5.105.50	5.105.70	5.105.11	5.105.21	5.105.41	5.105.51	5.105.71	5.102.5
AX1K	1/4"	5.105.10	5.105.20	5.105.40	5.105.50	5.105.70	5.105.12	5.105.22	5.105.42	5.105.52	5.105.72	5.102.5
AX1NE	1/4"	5.122.10	5.122.20	5.122.40	5.122.50	-	5.122.11	5.122.21	5.122.41	5.122.51	-	5.120.5

Main features

Version	Standard voltages	Code	Item
ASA12/ATEXII3	12 V DC	032100X	ASA1201200/ATEXII3
	24 V DC	032102X	ASA1202400/ATEXII3
	24 V AC	032103X	ASA1202450/ATEXII3
	110 V AC	032105X	ASA1211050/ATEXII3
	230 V AC	032106X	ASA1223050/ATEXII3



Technical data

Version	ASA12../ATEXII3				
Code	032100X	032102X	032103X	032105X	032106X
Item	ASA1201200/ATEXII3	ASA1202400/ATEXII3	ASA1202450/ATEXII3	ASA1211050/ATEXII3	ASA1223050/ATEXII3
Voltage	12 V DC	24 V DC	24 V AC	110 V AC	230 V AC
Current	0.250 A	0.120 A	0.208 A	0.045 A	-0.023 A
Frequency	-		50/60 Hz		
Size	22 mm				
Plunger Ø	9 mm				
Compliance	ATEX 2014/34/EU				
ATEX classification	II 3G Ex ec IIC T5 Gc II 3D Ex tc IIIC T95°C Dc IP65				
Current	Direct		Alternating		
Voltage tolerance	±10%				
Electrical consumption	3 W		5 VA		
Duty cycle	100% ED				
Class protection*	IP 65				
Insulation class	F				
Temperature range	-10°C ÷ +50°C				
Material	Thermoset resin				
Valves matching	Series AX1E.., Series AX1K.., Series AX1NE..				
Connectors matching	Series A122..ATEX				

*With connector already mounted

Standard dimensions

II 3G Ex ec IIC T5 Gc
II 3D Ex tc IIIC T95°C Dc IP65

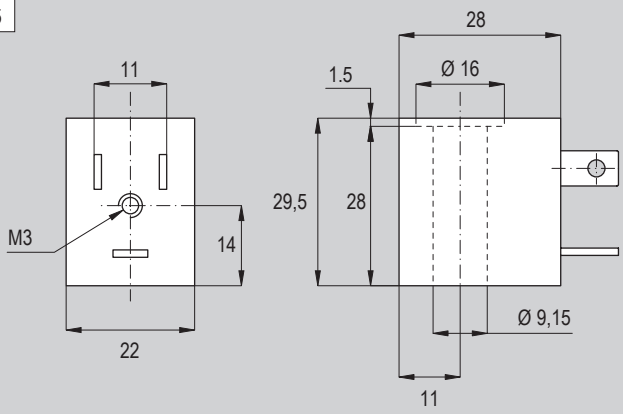

Stainless steel solenoid operated valves, ATEX coils and connectors

Connectors series A122/ATEX, increased safety Ex ec

Main features

Version	Code	Item
A122/ATEX	032118X	A12209N/ATEX



Technical data

Version	A122../ATEX
Code	032118X
Item	A12209N/ATEX
Nominal voltage	230 V DC
Norm	EN 175301-803 (formaDIN 43 650)
Size	22 mm
Contact distance	11 mm
Compliance	ATEX 2014/34/EU
ATEX classification	II 2G Ex eb IIC T5 Gb II 2D Ex tb IIIC T100°C IP65/IP67
Rated impulse voltage	4000 V
Rated current (40°C)	10 A
Contact resistance	≤ 15 mΩ
Insulation resistance	≥ 100 MΩ
Class protection	IP65 / IP67
Insulation class	F
Temperature range	-20°C ÷ +85°C
Material	Thermoset resin
Valves matching	Series AX1E.., Series AX1K.., Series AX1NE..
Coils matching	ASA12../ATEXII3

Standard dimensions

II 2G Ex eb IIC T5 Gb
II 2D Ex tb IIIC T100°C IP65/IP67

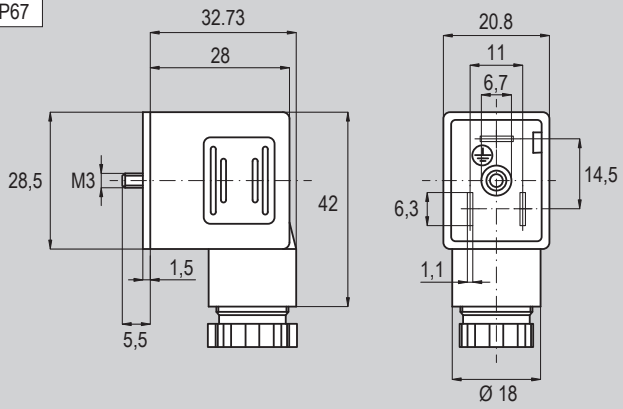

Stainless Steel solenoid operated valves, ATEX coils and connectors

Coils and connectors supplied separately, explosion proof encapsulated coil Ex db mb

Main features

Stainless steel solenoid operated valves conforming to ATEX Ex db mb (explosion proof encapsulated coil), to be configured combining the stainless steel valve body with coil type ASA4/ ATEXII2 with integrated connector.

Stainless steel valve body and coil are supplied separetely and not mounted.

The configuration require to order the stainless steel valve body of desired size and function (see the relevant code key of each series), and the 36 mm coil type ASA4/ATEXII2, as shown in the "how to order" table below.

For mathcing between stainless steel valve body and coil, please see page 5.150.5

For technical data and for dimensions of the stainless steel valve body, please refere to the relevant pages of each series.
For technical data and for dimensions of the coil type ASA4/ATEXII2 see page 5.156.2

ATEX compliance

The abovementioned components, while assembled, makes a stainless steel solenoid operated valve conforming to 2014/34/EU ATEX Directive, in classification Ex db mb, suitable for application in potentially explosive atmospheres Group II, cat. 2 Gas & Powders, temperature class T5, protection grade IP66, with the following marking:

CE Ex II 2G Ex db mb IIC T5 Gb
II 2D Ex tb IIIC T95°C Db IP66

For further information on the ATEX 2014/34/EU Directive, on classifications and protections, see from page III.1

How to order

Valve body series	Actuation	Size	Function	ATEX body option
AX1	E	2	50	/ATEX

Coil series	Size	Voltage		ATEX compliance
ASA	4	024	00	/ATEXII2

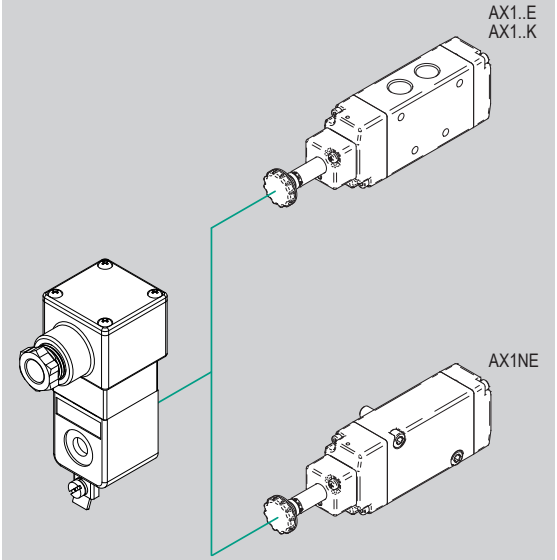

Valve body technical data, dimensions and materials

Technical data, dimensions and materials of the stainless steel valve bodies are the same of the standard stainless steel valve body.
For further information, please see the relevant pages, as indicated in the table below.

Series	Size	Technical data					Dimensions					Standard materials
		3/2 sol./spring	3/2 sol./sol.	5/2 sol./spring	3/2 sol./sol.	5/3	3/2 sol./spring	3/2 sol./sol.	5/2 sol./spring	3/2 sol./sol.	5/3	
AX1E	1/4"	5.105.10	5.105.20	5.105.40	5.105.50	5.105.70	5.105.11	5.105.21	5.105.41	5.105.51	5.105.71	5.102.5
AX1K	1/4"	5.105.10	5.105.20	5.105.40	5.105.50	5.105.70	5.105.12	5.105.22	5.105.42	5.105.52	5.105.72	5.102.5
AX1NE	1/4"	5.122.10	5.122.20	5.122.40	5.122.50	-	5.122.11	5.122.21	5.122.41	5.122.51	-	5.120.5

Stainless Steel solenoid operated valves, ATEX coils and connectors

Coils series ASA4/ATEXII/2, explosion proof encapsulated coil Ex db mb

Main features

Version	Standard voltages	Code	Item
ASA4/ATEXII2	24 V DC	032199	ASA402400/ATEXII2



Technical data

Version	ASA4/ATEXII2
Code	032199
Item	ASA202400/ATEXII2
Voltage	24 V DC
Frequency	50/60 Hz
Size	36 mm
Plunger Ø	9 mm
Compliance	ATEX 2014/34/EU
ATEX classification	II 2G Ex db mb IIC T5 Gb II 2D Ex tb IIIC T95°C IP66 Db
Current	Direct
Voltage tolerance	±10%
Electrical consumption	3.2 VA
Duty cycle	100% ED
Class protection	IP 66
Insulation class	F
Temperature range	-50°C ÷ +50°C
Material	Thermoset resin
Valves matching	Series AX1E.., Series AX1K.., Series AX1NE..
Connectors	Connector integrated

Standard dimensions

II 2G Ex db mb IIC T5 Gb
II 2D Ex tb IIIC T95°C IP66 Db

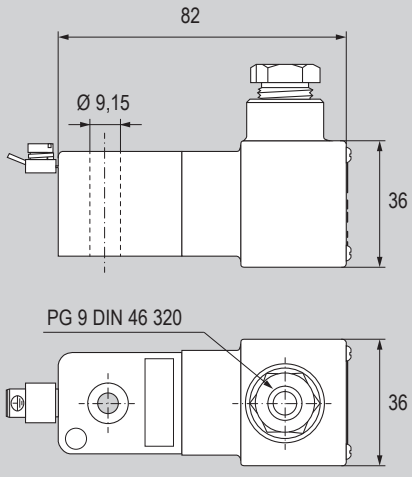

Stainless Steel solenoid operated valves, ATEX coils and connectors

Coils and connectors supplied separately, encapsulated coil Ex mb

Main features

Stainless steel solenoid operated valves conforming to ATEX Ex mb (encapsulated coil), to be configured combining the stainless steel valve body with coil type ASA2/ATEXII2 with cabled connector integrated.

Stainless steelvalve body and coil are supplied separetely and not mounted.

The configuration require to order the stainless steel valve body of desired size and function (see the relevant code key of each series), and the 30 mm coil type ASA2/ATEXII2 (available in different voltages), as shown in the "how to order" below.

For mathcing between stainless steel valve body and coil, please see page 5.150.5

For technical data and for dimensions of the stainless steel valve body, please refere to the relevant pages of each series.
For technical data and for dimensions of the coil type ASA2/ATEXII2 see page 5.157.2

ATEX compliance

The abovementioned components, while assembled, makes a stainless steel solenoid operated valve conforming to 2014/34/EU ATEX Directive, in classification Ex mb, suitable for application in potentially explosive atmospheres Group II, cat. 2 Gas & Powders, temperature class T5, protection grade IP66, with the following marking:

CE Ex II 2G Ex mb IIC T5 Gb
II 2D Ex tb IIIC T95°C Db IP66

For further information on the ATEX 2014/34/EU Directive, on classifications and protections, see from page III.1

How to order

Valve body series	Actuation	Size	Function	ATEX body option
A1	E	2	50	/ATEX

Coil series	Size	Voltage		ATEX compliance
ASA	2	024	00	/ATEXII2

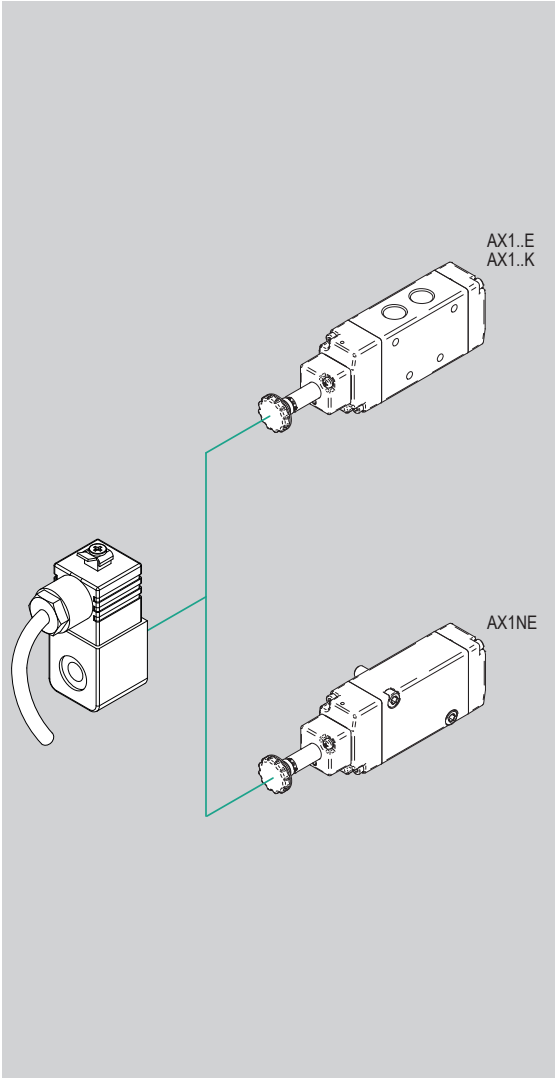

Valve body technical data, dimensions and materials

Technical data, dimensions and materials of the stainless steel valve bodies are the same of the standard stainless steel valve body.
For further information, please see the relevant pages, as indicated in the table below.

Series	Size	Technical data					Dimensions					Standard materials
		3/2 sol./spring	3/2 sol./sol.	5/2 sol./spring	3/2 sol./sol.	5/3	3/2 sol./spring	3/2 sol./sol.	5/2 sol./spring	3/2 sol./sol.	5/3	
AX1E	1/4"	5.105.10	5.105.20	5.105.40	5.105.50	5.105.70	5.105.11	5.105.21	5.105.41	5.105.51	5.105.71	5.102.5
AX1K	1/4"	5.105.10	5.105.20	5.105.40	5.105.50	5.105.70	5.105.12	5.105.22	5.105.42	5.105.52	5.105.72	5.102.5
AX1NE	1/4"	5.122.10	5.122.20	5.122.40	5.122.50	-	5.122.11	5.122.21	5.122.41	5.122.51	-	5.120.5

Stainless Steel solenoid operated valves, ATEX coils and connectors

Coils series ASA2/ATEXII/2, encapsulated coil Ex mb

Main features

Version	Standard voltages	Code	Item
ASA2/ATEXII2	24 V DC	032192	ASA202400/ATEXII2
	24 V AC	032193	ASA202450/ATEXII2
	48 V AC	032196	ASA204850/ATEXII2
	110 V AC	032194	ASA211050/ATEXII2
	230 V AC	032195	ASA223050/ATEXII2



Technical data

Version	ASA2/ATEXII2				
Code	032192	032193	032196	032194	032195
Item	ASA202400/ATEXII2	ASA202450/ATEXII2	ASA204850/ATEXII2	ASA211050/ATEXII2	ASA223050/ATEXII2
Voltage	24 V DC	24 V AC	48 V AC	110 V AC	230 V AC
Frequency	-	50/60 Hz			
Size	30 mm				
Plunger Ø	9 mm				
Compliance	ATEX 2014/34/EU				
ATEX classification	II 2G Ex mb IIC T5 Gb II 2D Ex tb IIIC T95°C IP66 Db				
Current	Direct	Alternating			
Voltage tolerance	±10%				
Electrical consumption	3 W	5 VA			
Duty cycle	100% ED				
Class protection	IP 66				
Insulation class	F				
Temperature range	-50°C ÷ +50°C				
Material	Thermoset resin				
Valves matching	Series AX1E.., Series AX1K.., Series AX1NE..				
Connector	Cabled connector integrated				
Cable length	2 mt.				

Standard dimensions

II 2G Ex mb IIC T5 Gb
II 2D Ex tb IIIC T95°C IP66 Db

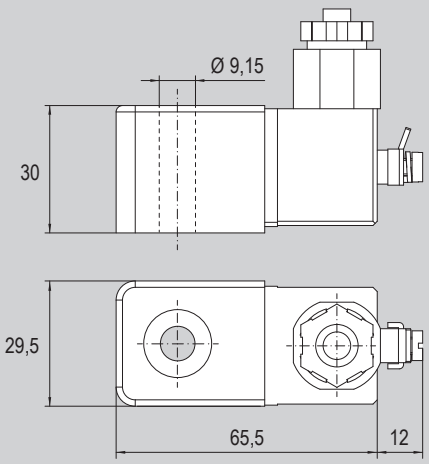

Notes

STAINLESS STEEL
ancillary valves



Find out our
key products

- **Solution for most applications**
- **Easy and intuitive choice**
- **Excellent value for money**
- **Wide availability**
- **Fast delivery**

Main features and certifications

Stainless Steel ancillary valves.
Different series of ancillary valves with different functions, sizes and configurations.
Supplied as standard in compliance to Reach and RoHS directives.

RoHS

REACH compliant

Stainless steel miniature ball valves from hexagonal bar

from page 5.161.10



Series of stainless steel miniature ball valves, manual operated, from hexagonal bar. In line mounting, to close or open the flow in both directions. Available in sizes 1/4", 3/8" and 1/2", in configuration female-female or male-female. With blue lever.



Stainless Steel ball valve “full bore”

from page 5.162.10



Series of stainless steel full bore ball valves, manual operated with long lever. In line mounting, to close or open the flow in both directions. Available in sizes from 1/4" to 2" in configuration female-female. With blue lever.



Stainless Steel unidirectional valves

from page 5.163.10



Series of stainless steel unidirectional valves, from hexagonal bar, female threads with piston. In line mounting, allow the compressed air to flow in one direction only; therefore they are suitable for those applications where no return of compressed air to the feeding is allowed. Available from size 1/8" to 2" in configuration female-female.

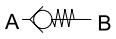

Stainless Steel quick exhaust valves

from page 5.165.10



Series of stainless steel quick exhaust valves, to increase the speed of a cylinder. Available in sizes from 1/8" to 1". Equipped with FKM/PU seals as standard.

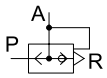

Stainless Steel ancillary valves

Stainless steel miniature ball valves from hexagonal bar

Main features

Version	Code	Item	Symbol
Thread 1/4” female-female	030651	2MVSXFF	
Thread 3/8” female-female	030652	3MVSXFF	
Thread 1/2” female-female	030653	4MVSXFF	
Thread 1/4” male-female	030654	2MVSXMF	
Thread 3/8” male-female	030655	3MVSXMF	
Thread 1/2” male-female	030656	4MVSXMF	





Technical data

Version	Stainless steel miniature ball valves from hexagonal bar series MVSX					
Code	030651	030652	030653	030654	030655	030656
Item	2MVSXFF	3MVSXFF	4MVSXFF	2MVSXMF	3MVSXMF	4MVSXMF
Size	1/4”	3/8”	1/2”	1/4”	3/8”	1/2”
Fluid	Filtered compressed air with or without lubrication.					
Pressure range	0 ÷ 25 bar					
Temperature range	-20°C ÷ +150°C					
Orifice	7 mm		9,2 mm	7 mm		9,2 mm
Female thread	UNI - ISO 228/1 (BSP)					
Male thread	-			UNI EN 10226-1 (BSPT)		
Lever color	Blue					
Mounting	In-line					

Standard materials

Description	Material
Body	Stainless Steel AISI 316
Lever	Nylon 66 renforced glass
Ball	Stainless Steel AISI 316
Seals	PTFE - FKM

Code key

Size	Series	Configuration
3	**MVSX**	**FF**
2 = 1/4”	MVSX	FF = Female-Female
3 = 3/8”		MF = Male-Female
4 = 1/2"		

How to order

Size	Series	Configuraz.
3	**MVSX**	**FF**

Notes

For standard materials see the table at page 5.161.10

Options in the same grid are alternative to each others.

Standard dimensions

Type: **FF**

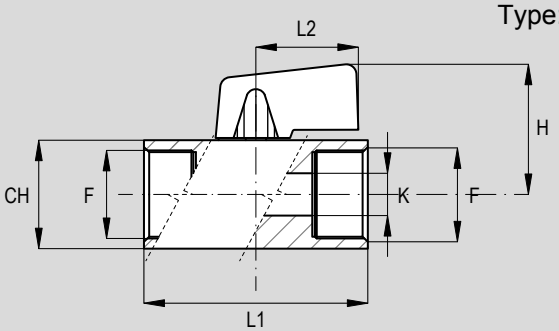

Type: **MF**

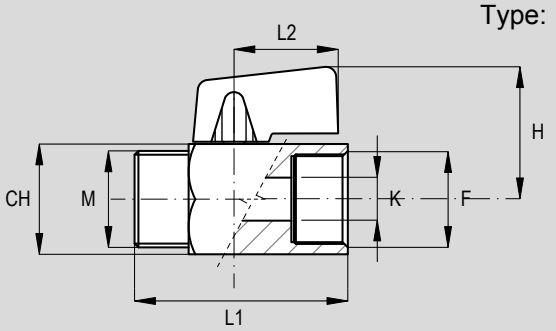

Code	Item	M	F	K	L1	L2	H	CH	Weight (g)
030651	2MVSXFF	-	G1/4”	7	42	23	26	22	200
030652	3MVSXFF	-	G3/8”	7	42	23	26	22	190
030653	4MVSXFF	-	G1/2”	9,2	46	23	28	25	175
030654	2MVSXMF	R1/4”	G1/4”	7	40	23	26,5	22	170
030655	3MVSXMF	R3/8”	G3/8”	7	40	23	26,5	22	165
030656	4MVSXMF	R1/2”	G1/2”	9,2	45,6	23	28,3	25	160

Stainless Steel ancillary valves
Stainless Steel ball valves "full bore"

Main features

Version	Code	Item	Symbol
1/4”	030681	VSLX014FF	
3/8”	030682	VSLX038FF	
1/2”	030683	VSLX012FF	
3/4”	030684	VSLX034FF	
1”	030685	VSLX100FF	
1 1/4”	030686	VSLX114FF	
1 1/2”	030687	VSLX112FF	
2”	030688	VSLX200FF	



Technical data

Version	Stainless Steel ball valve “full bore” series VSLX							
Code	030681	030682	030683	030684	030685	030686	030687	030688
Item	VSLX014FF	VSLX038FF	VSLX012FF	VSLX034FF	VSLX100FF	VSLX114FF	VSLX112FF	VSLX200FF
Size	1/4”	3/8”	1/2”	3/4”	1”	1 1/4”	1 1/2”	2”
Female thread	UNI - ISO 228/1 (BSP)							
Fluid	Compressed air, inert gases, non-aggressive fluids							
Pressure range	100 bar			64 bar		40 bar		
Temperature range	-20°C ÷ +150°C							
Orifice	10 mm		15 mm	20 mm	25 mm	32 mm	40 mm	50 mm
Flow rate	3.000 l/min.		11.500 l/min.	21.000 l/min.	33.000 l/min.	50.000 l/min.	84.000 l/min.	97.000 l/min.
Mounting	In-line							

Standard materials

Description	Material
Body	Stainless Steel AISI 316
Lever	Stainless Steel AISI 316
Ball	Stainless Steel AISI 316
Seals	PTFE - FKM

Code key

Series	Size	Configuration
VSLX	**012**	**FF**
VSLX	014 = 1/4” 038 = 3/8” 012 = 1/2” 034 = 3/4” 100 = 1” 114 = 1 1/4” 112 = 1 1/2” 200 = 2”	FF = Female-Female

How to order

Series	Size	Configuration
VSLX	**012**	**FF**

Notes

For standard materials see the table at page 5.162.10

Options in the same grid are alternative to each others.

Standard dimensions

Type: **VSLX**

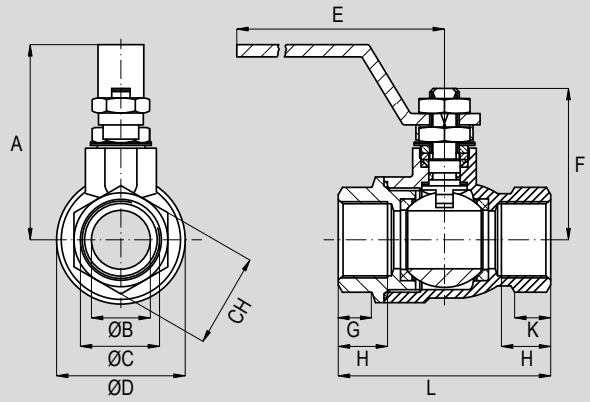

Code	Item	Ø C (size)	A	Ø B	Ø D	E	F	G	H	K	L	CH	Weight (g)
030681	VSLX014FF	G1/4”	52	8	29	110	37	8,5	11,4	8	50	21,5	220
030682	VSLX038FF	G3/8”	52	10	29	110	37	8,5	11,4	8	50	21,5	205
030683	VSLX012FF	G1/2”	55	15	34	110	42	10	15	9,5	60	26,5	275
030684	VSLX034FF	G3/4”	66	20	42,5	140	52	11,5	16,3	11,5	70	31,5	465
030685	VSLX100FF	G1”	70	25	50,5	140	56	14	19,1	13,5	85	40,5	710
030686	VSLX114FF	G1-1/4”	85	32	63	180	68	15,5	21,4	16	95	49,5	1180
030687	VSLX112FF	G1-1/2”	91	40	75,5	180	74	18,5	21,4	16	105	54,5	1740
030688	VSLX200FF	G2”	105	50	91	230	87	22,5	25,7	23,5	125	69,5	2930

Main features

Version	Code	Item	Symbol
1/8”	030110	1FFX	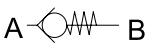
1/4”	030111	2FFX	
3/8”	030112	3FFX	
1/2”	030113	4FFX	
3/4”	030114	5FFX	
1”	030115	6FFX	
1 1/4"	030129	14FFX	
1 1/2"	030130	12FFX	
2"	030131	20FFX	



Technical data

Version	Stainless Steel unidirectional valves FFX								
Code	030110	030111	030112	030113	030114	030115	030129	030130	030131
Item	1FFX	2FFX	3FFX	4FFX	5FFX	6FFX	14FFX	12FFX	20FFX
Size	1/8”	1/4”	3/8”	1/2”	3/4”	1”	1 1/4"	1 1/2"	2"
Female thread	UNI - ISO 228/1 (BSP)								
Fluid	Filtered compressed air with or without lubrication.								
Pressure range	0,5 ÷ 350 bar				0,5 ÷ 300 bar	0,5 ÷ 250 bar			0,5 ÷ 200 bar
Temperature range	-20°C ÷ +150°C								
Orifice	18 mm^2	22 mm^2	42 mm^2	75 mm^2	126 mm^2	230 mm^2	340 mm^2	509 mm^2	1.640 mm^2
Mounting	In-line								

Standard materials

Description	Material
Body	Stainless Steel AISI 316
Spring	Stainless Steel AISI 316
Seals	FKM

Code key

Size	Series
2	**FFX**

Size
1 = 1/8”
2 = 1/4”
3 = 3/8”
4 = 1/2”
5 = 3/4”
6 = 1”
14 = 1 1/4”
12 = 1 1/2”
20 = 2”

Series
FFX

How to order

Size	Series
2	**FFX**

Notes

Options in the same grid are alternative to each others.

For standard materials see the table at page 5.163.10

Standard dimensions

Type: **FF**

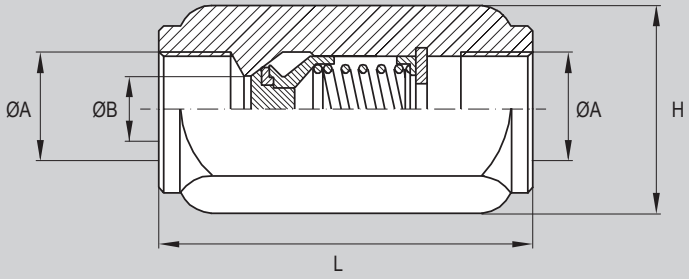

Code	Item	ØA (size)	ØB	L	H	Weight (g)
030110	1FFX	G1/8”	5	42	14	50
030111	2FFX	G1/4”	7	50	19	90
030112	3FFX	G3/8”	10	60	24	160
030113	4FFX	G1/2”	11	65	27	280
030114	5FFX	G3/4”	17	75	34	350
030115	6FFX	G1”	21	93	41	580
030129	14FFX	G1”-1/4	29	110	50	860
030130	12FFX	G1”-1/2	34	112	55	1020
030131	20FFX	G2”	48	120	75	2200

Stainless Steel ancillary valves
Stainless Steel quick exhaust valves

Main features

Version	Code	Item	Symbol
1/8”	030810	1VSRX	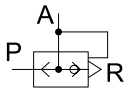
1/4”	030809	2VSRX	
3/8”	030811	3VSRX	
1/2”	030812	4VSRX	
3/4”	030813	5VSRX	
1”	030814	6VSRX	



Technical data

Version	Stainless Steel quick exhaust valves series VSRX					
Code	030810	030809	030811	030812	030813	030814
Item	1VSRX	2VSRX	3VSRX	4VSRX	5VSRX	6VSRX
Size	1/8”	1/4”	3/8”	1/2”	3/4”	1”
Fluid	Filtered compressed air with or without lubrication.					
Pressure range	2 ÷ 10 bar					
Temperature range	-10°C ÷ +120°C		-20°C ÷ +80°C (standard) -10°C ÷ +150°C (V)			
Orifice	6 mm	8 mm	10 mm	12 mm	16 mm	18 mm
Flow from P to A (at 6 bar, with ΔP 1 bar)	1.580 Nl/min.	1.650 Nl/min.	2.350 Nl/min.	4.580 Nl/min.	7.100 Nl/min.	7.200 Nl/min.
Flow from A to R (at 6 bar, with ΔP 1 bar)	1.880 Nl/min.	1.900 Nl/min.	2.880 Nl/min.	6.400 Nl/min.	10.400 Nl/min.	10.500 Nl/min.
Mounting	Preferably directly on the cylinder port					

Standard materials

Description	Material					
	1VSRX	2VSRX	3VSRX	4VSRX	5VSRX	6VSRX
Body	Stainless Steel AISI 316L					
Seals	FKM		Polyurethane (PU)			

Code key

Size	Series	Seals option*	Thread option
3	**VSRX**	**V**	**NPT**
1 = 1/8” 2 = 1/4” 3 = 3/8” 4 = 1/2” 5 = 3/4” 6 = 1”	VSRX	V = FKM (-10°C ÷ +150°C)	NPT = NPT threads (according to ANSI B 1.20.1)

How to order

Size	Series	Seals	Filettatura
3	**VSRX**	**V**	**NPT**

Notes

For standard materials see the table at page 5.165.10

Options in the same grid are alternative to each others.

*Available for sizes from 3/8" to 1" only (size 1/8" and 1/4" are equipped with FKM seals as standard)

Standard dimensions

Type: **VSRX**

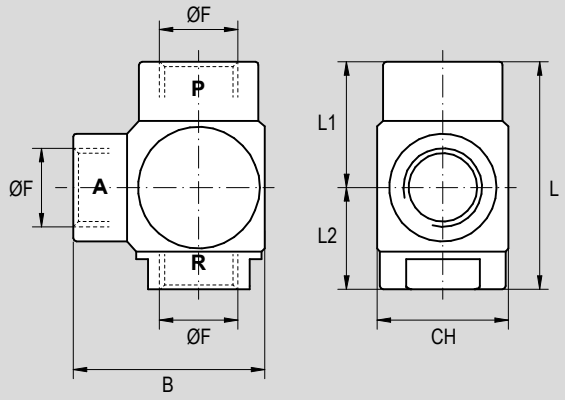

Code	Item	ØF (size)	L	L1	L2	B	CH
030810	1VSRX	G1/8”	37,5	21	16,5	32	22
030809	2VSRX	G1/4”	37,5	21	16,5	32	22
030811	3VSRX	G3/8”	44,5	25,5	19	37	26
030812	4VSRX	G1/2”	54	23	31	45	32
030813	5VSRX	G3/4”	79	35	44	65	46
030814	6VSRX	G1”	79	35	44	65	46

Important note

The valve must be directly mounted on the port of the cylinder to achieve the maximum possible speed.
When the supply is in **P** the diaphragm closes the exhaust **R** and so the air flows through **A** into the chamber of the cylinder. When the supply **P** fails the diaphragm get back in its orginal position (closing **P**) due to the exhaust air from **A** to **R**. The noise of the exhaust **R** can be reduced by a silencer (for silencers see from page 4.150.1, for stainless silencers see page 5.390.1).

STAINLESS STEEL
modular units



Find out our
key products

- **Solution for most applications**
- **Easy and intuitive choice**
- **Excellent value for money**
- **Wide availability**
- **Fast delivery**

Main features and certifications

Stainless Steel AISI 316 modular units for air treatment. Characterised by resistance to chemical and corrosive elements, are also suitable for high pressure, thus fit to food&beverage, medical, chemical, Oil&Gas and mining applications.
Available in different sizes, these modular units are light and with reduced overall dimensions, effective in removing water and particles, with the possibility of accurate and sensitive pressure adjustment, can guarantee excellent performances in both chemical and outdoor environments.
Supplied with material qualification according to NACE MR0175 / UNI EN ISO 15156-1:2009 standards, conforming to Reach and RoHS directive, SIL certified and in compliance with 201/34/EU ATEX Directive, classification Ex h.

Stainless Steel Filters series A..FX, 1/4" ÷ 1"

from page 5.202.20



Stainless Steel modular filters, available in sizes 1/4", 1/2" and 1". Equipped as standard with 5µm filter cartridge (40µm as option) and semi-automatic condense drain (manual or automatic drain as option).
Supplied complete with stainless steel mounting bracket.



Stainless Steel Regulators A..RX, 1/4" ÷ 1"

from page 5.202.50



Stainless Steel modular regulators, available in sizes 1/4", 1/2" and 1". Equipped as standard with relieving valve and regulation screw.
Supplied complete with stainless steel mounting bracket and stainless steel pressure-gauge.



Stainless Steel Lubricators series A..LX, 1/4" ÷ 1"

from page 5.202.80



Stainless Steel modular lubricators, available in sizes 1/4", 1/2" and 1". Equipped as standard with oil regulation cup. Lubricant can be added without stopping the air supply.
Supplied complete with stainless steel mounting bracket.



Stainless Steel Filter-regulators A..FRRX, 1/4" ÷ 1"

from page 5.202.110



Stainless Steel modular filter-regulators, available in sizes 1/4", 1/2" and 1". Equipped as standard with 5µm filter cartridge (40µm as option), semi-automatic condense drain (manual or automatic drain as option), relieving valve and regulation screw.
Supplied complete with stainless steel mounting bracket and stainless steel pressure-gauge.

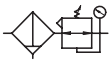

Stainless Steel Filter-regulators + lubricators series A..FRRLX, 1/4" ÷ 1"

from page 5.202.140



Stainless Steel modular filter-regulators, available in sizes 1/4", 1/2" and 1". Equipped as standard with 5µm filter cartridge (40µm as option), semi-automatic condense drain (manual or automatic drain as option), oil regulation cup, relieving valve and regulation screw.
Lubricant can be added without stopping the air supply.
Supplied already assembled and complete with stainless steel mounting bracket and stainless steel pressure-gauge.

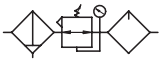

Options

Description		Symbol	Suffix
High pressure (out). Only for size 1/2" and 1".	12 ÷ 30 bar (1/2") 12 ÷ 28 bar (1")		**HP**
Filter cartridge 40 µm			**40**
NPT thread	(ANSI B 1.20.1 standard)		**N**
Manual condense drain			**H**
Automatic condense drain*	P_{max} 10 bar		**D**
EPDM seals for low temperatures	-40°C ÷ +70°C		**BT**

The options, when this is possible, can be combined with each other. For options matching see page 5.202.4; For code key see page 5.202.5.
***Warning:** with option D the maximum inlet pressure is 10 bar.

Accessories supplied with modular unit

Type			Stainless Steel AISI 316 pressure-gauge	Stainless Steel AISI 316 mounting bracket and screws
				
Filter FX			-	•
Regulator RX			•	•
Lubricator LX			-	•
Filter-regulator FRRX		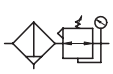	•	•
Filter-regulator + lubricator FRRLX		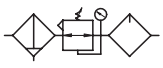	•	•

Key
● supplied; - not supplied;

Options matching

Type	Size	Model	Standard options matching					
			HP (1/2" ÷ 1")	**40**	**N**	**H**	**D** (P_{max} 10 bar)	**BT**
FX	1/4" - 1/2" - 1"	Standard	-	●	●	●	●	●
		NPT thread (N)	-	●		●	●	●
		Automatic condense drain (D)	-	●	●	-		●
		Manual condense drain (H)	-	●	●		-	●
RX	1/4"	Standard	-	-	●	-	-	●
		NPT thread (N)	-	-		-	-	●
	1/2" - 1"	Standard	●	-	●	-	-	●
		High pressure (HP)		-	●	-	-	●
		NPT thread (N)	●	-		-	-	●
LX	1/4" - 1/2" - 1"	Standard	-	-	●	-	-	●
		NPT thread (N)	-	-		-	-	●
FRRLX	1/4"	Standard	-	●	●	●	●	●
		NPT thread (N)	-	●		●	●	●
		Automatic condense drain (D)	-	●	●	-		●
		Manual condense drain (H)	-	●	●		-	●
	1/2" - 1"	Standard	●	●	●	●	●	●
		High pressure (HP)		●	●	●	-	●
		NPT thread (N)	●	●		●	●	●
		Automatic condense drain (D)	-	●	●	-		●
		Manual condense drain (H)	●	●	●		-	●
FRRX	1/4"	Standard	-	●	●	●	●	●
		NPT thread (N)	-	●		●	●	●
		Automatic condense drain (D)	-	●	●	-		●
		Manual condense drain (H)	-	●	●		-	●
	1/2" - 1"	Standard	●	●	●	●	●	●
		High pressure (HP)		●	●	●	-	●
		NPT thread (N)	●	●		●	●	●
		Automatic condense drain (D)	-	●	●	-		●
		Manual condense drain (H)	●	●	●		-	●

Key

● allowed matching; - not allowed matching.

Code key

Series	Size	Function	Options (1)				
A	**12**	**FRRLX**				**H**	
A	14 = 1/4"	FRRLX = Filter-regulator + lubricator	HP	40	N	H	BT
	12 = 1/2"	FRRX = Filter-regulator				D (2)	
	01 = 1"	FX = Filter					
		RX = Regulator					
		LX = Lubricator					

How to order

Series	Size	Function	Options
A	**12**	**FRRLX**	**H**

Notes

For standard materials see the table at page 5.202.6

Options in the same grid are alternative to each others.

(1) For information on options and their matching, see page 5.202.3 and following.

(2) **Warning:** with option D the maximum inlet pressure is 10 bar.

Assembling modular components (body FRRX + body LX for size 1/4" and 1/2", and body FFRX + body LX or combinations between body FX, body RX and body LX size 1") require the VOXKIT (see table below). For further information, please contact the sales department.

ATEX note

Stainless Steel modular units are supplied as standard conforming to 2014/34/EU ATEX Directive in classification

CE Ex II 2G Ex h IIC T6 Gb
II 2D Ex h IIIC T85° Db

For further infomation on the ATEX 2014/34/EU Directive, on classifications and protections, see from page III.1

Screws and o-ring kit for assembly of two modular bodies



Code	Item	Size
090618	VOXKIT14	1/4"
090619	VOXKIT12	1/2"
090620	VOXKIT01	1"

Standard materials

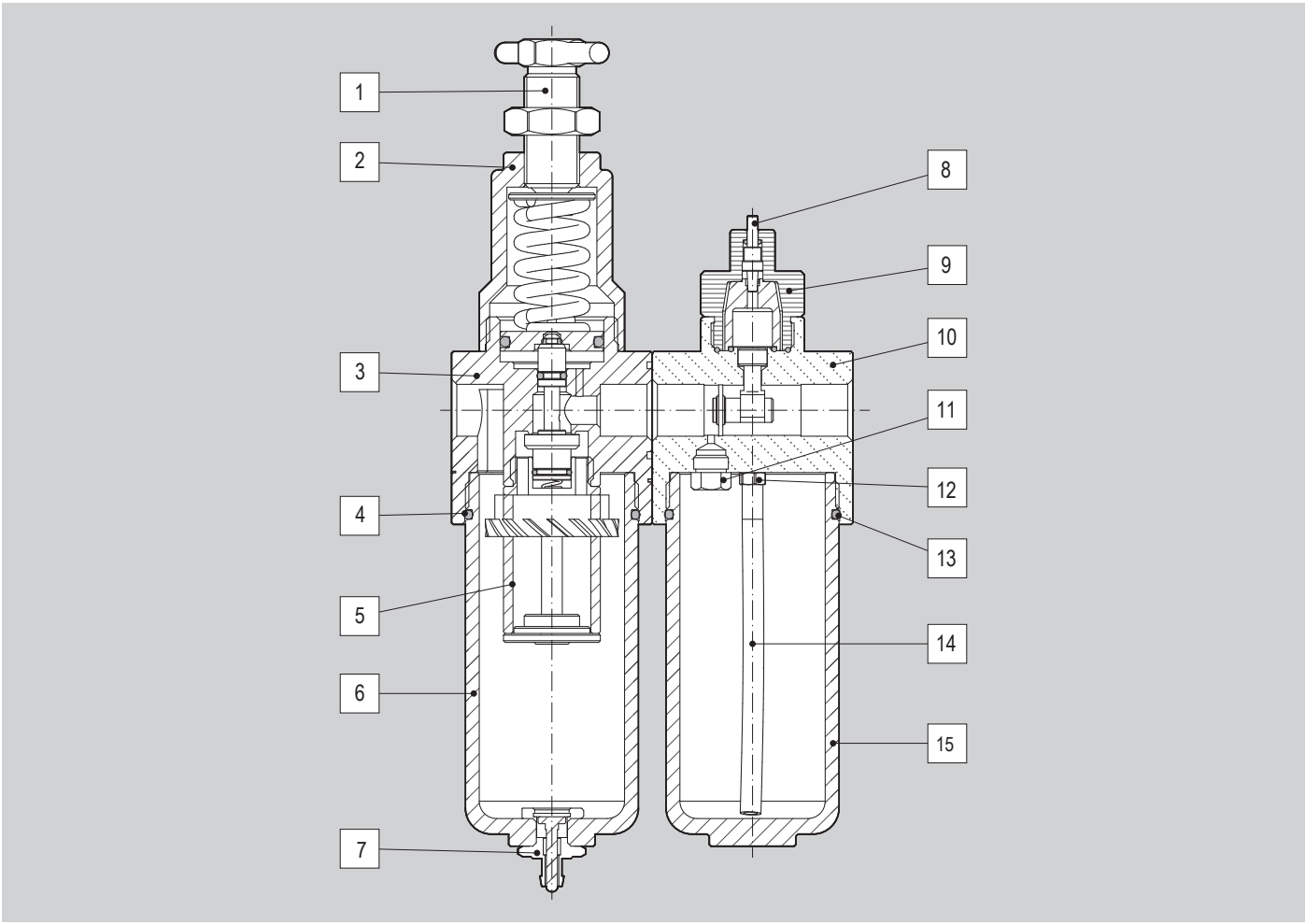

Position	Description	Material
1	Pressure regulator screw	Stainless Steel AISI 316
2	Pressure regulator cover	Stainless Steel AISI 316
3	Regulator body	Stainless Steel AISI 316
4	O-ring	FKM
5	Filtering element	Stainless Steel AISI 316
6	Filter cup	Stainless Steel AISI 316
7	Drain	Stainless Steel AISI 316
8	Oil regulation screw	Stainless Steel AISI 316
9	Lubricator cover	Stainless Steel AISI 316
10	Lubricator body	Stainless Steel AISI 316
11	Plug	Stainless Steel AISI 316
12	Fitting	Stainless Steel AISI 316
13	O-ring	FKM
14	Tube	PU
15	Lubricator cup	Stainless Steel AISI 316

Stainless Steel modular units
Filters, 1/4" ÷ 1"

Main features

Code	Item	Size	Function	Symbol
090607	A14FX	1/4"	Filter	
090608	A12FX	1/2"		
090609	A01FX	1"		



Technical data

Type	A14FX	A12FX	A01FX
Size	1/4"	1/2"	1"
Fluid	Compressed air		
Maximum inlet pressure	0÷30 bar (standard) 0÷10 bar (D)*	0÷60 bar (standard) 0÷10 bar (D)*	
Temperature range	-10°C ÷ +70°C (standard) -40°C ÷ +70°C (BT)		
Maximum flow at 6 bar with 40 µm cartridge	1900 Nl/min.	3030 Nl/min.	9600 Nl/min.
Filtration grade	5 µm (standard) 40 µm (40)		
Cup capacity	105 cm^3	110 cm^3	200 cm^3
Condense drain	Semi-automatic (standard) Automatic (D) Manual (H)		
Weight	1260 g	1650 g	3950 g

Notes

Supplied complete with AISI 316 stainless steel mounting bracket and screw.
***Warning:** with option D the maximum inlet pressure is 10 bar.

Standard dimensions

II 2G Ex h IIC T6 Gb
II 2D Ex h IIIC T85° Db

Type: **A14FX**

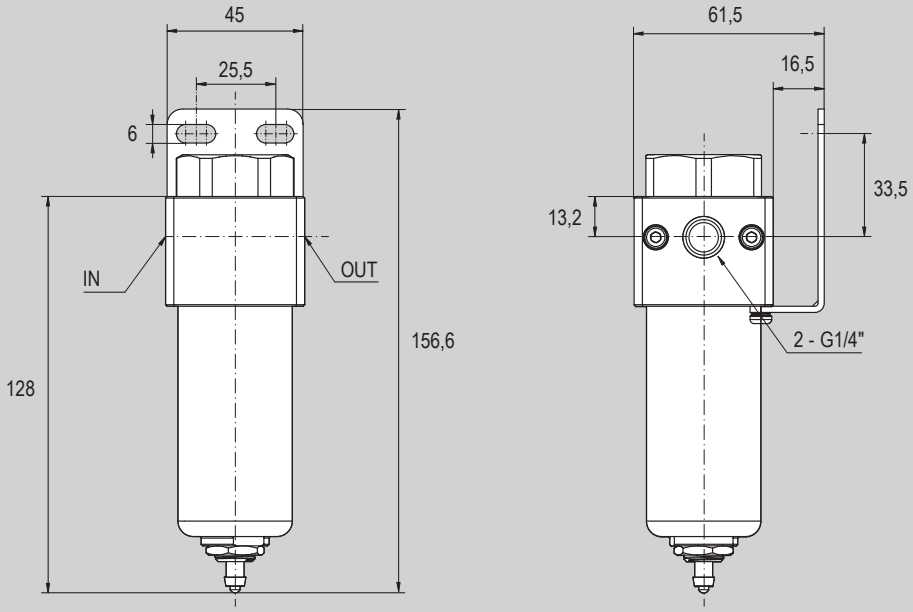

Size	Function	Symbol	Code	Item
1/4"	Filter		090607	A14FX

Standard dimensions

II 2G Ex h IIC T6 Gb
II 2D Ex h IIIC T85° Db

Type: **A12FX**

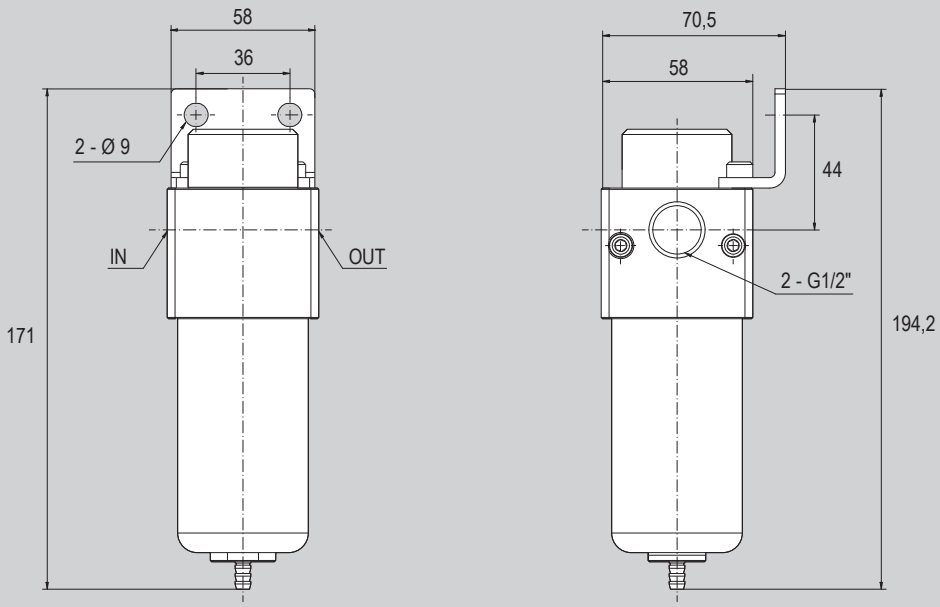

Size	Function	Symbol	Code	Item
1/2"	Filter		090608	A12FX

Standard dimensions

II 2G Ex h IIC T6 Gb
II 2D Ex h IIIC T85° Db

Type: **A01FX**

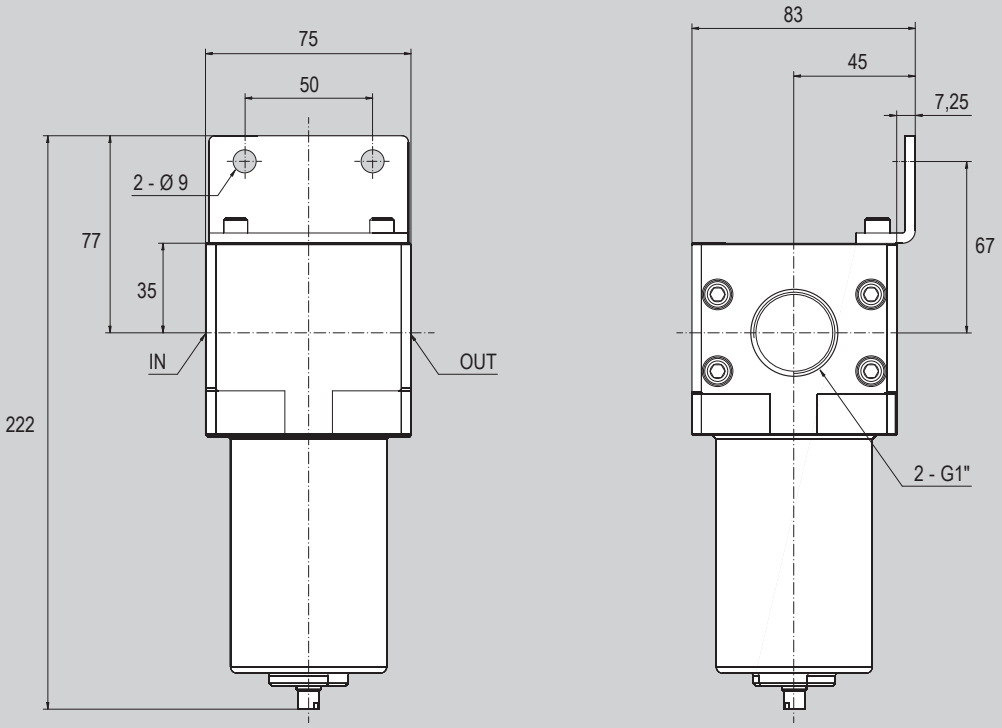

Size	Function	Symbol	Code	Item
1"	Filter		090609	A01FX

Stainless Steel modular units
Regulators, 1/4" ÷ 1"

Main features

Code	Item	Size	Function	Symbol
090610	A14RX	1/4"	Regulator	
090611	A12RX	1/2"		
090612	A01RX	1"		



Technical data

Type	A14RX	A12RX	A01RX
Size	1/4"	1/2"	1"
Fluid	Compressed air		
Maximum inlet pressure	0÷30 bar (standard) 0÷10 bar (D)*	0÷60 bar (standard) 0÷10 bar (D)*	
Pressure regulation range	0,5÷20 bar	0,5÷12 bar (standard) 12÷30 bar (HP)	0,5÷12 bar (standard) 12÷28 bar (HP)
Temperature range	-10°C ÷ +70°C (standard) -40°C ÷ +70°C (BT)		
Flow (at 6 bar)	1850 Nl/min.	2520 Nl/min.	9400 Nl/min.
Pressure regulator	Piston		
Overpressure relief	Relieving M5		
Gauges port	1/8"	1/4"	
Weight	1200 g	1400 g	3400 g

Notes

Supplied complete with AISI 316 stainless steel pressure-gauge, mounting bracket and screw.
***Warning:** with option D the maximum inlet pressure is 10 bar.

Standard dimensions

II 2G Ex h IIC T6 Gb
II 2D Ex h IIIC T85° Db

Type: **A14RX**

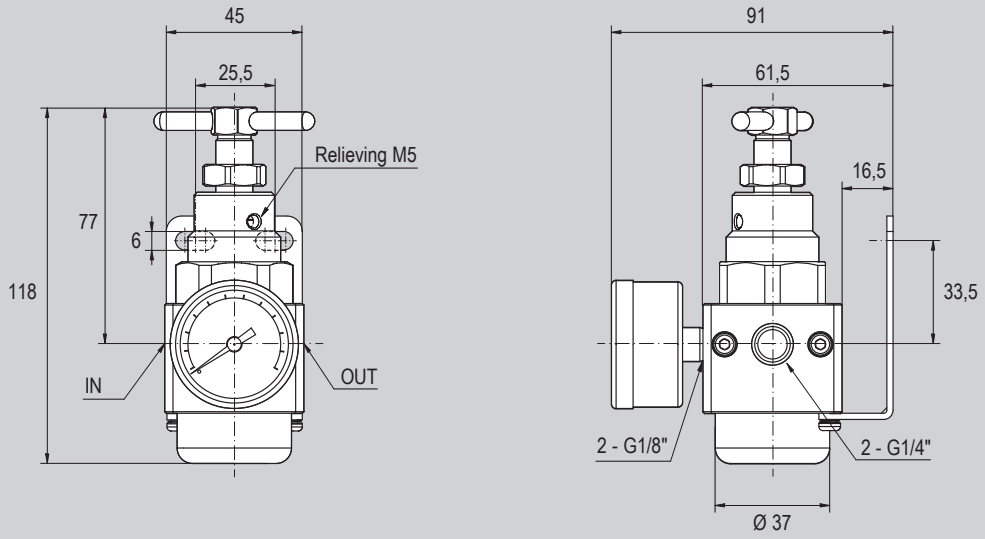

Size	Function	Symbol	Code	Item
1/4"	Regulator		090610	A14RX

Standard dimensions

II 2G Ex h IIC T6 Gb
II 2D Ex h IIIC T85° Db

Type: **A12RX**

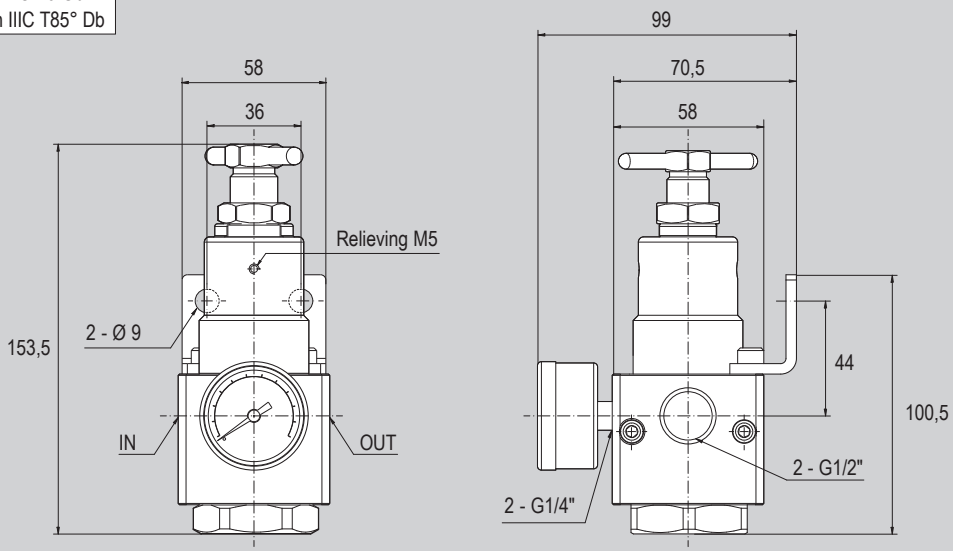

Size	Function	Symbol	Code	Item
1/2"	Regulator		090611	A12RX

Standard dimensions

II 2G Ex h IIC T6 Gb
II 2D Ex h IIIC T85° Db

Type: **A01RX**

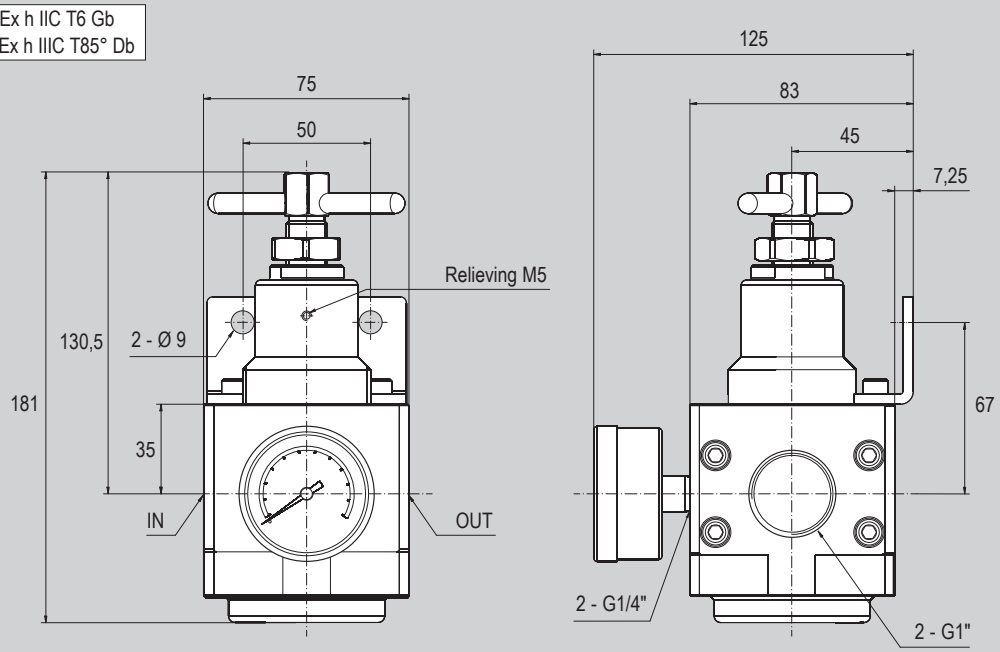

Size	Function	Symbol	Code	Item
1"	Regulator		090612	A01RX

Stainless Steel modular units
Lubricators, 1/4" ÷ 1"

Main features

Code	Item	Size	Function	Symbol
090613	A14LX	1/4"	Lubricator	
090614	A12LX	1/2"		
090615	A01LX	1"		



Technical data

Type	A14LX	A12LX	A01LX
Size	1/4"	1/2"	1"
Fluid	Compressed air		
Maximum inlet pressure	0÷30 bar (standard) 0÷10 bar (D)*	0÷60 bar (standard) 0÷10 bar (D)*	
Temperature range	-10°C ÷ +70°C (standard) -40°C ÷ +70°C (BT)		
Flow (at 6 bar)	2500 Nl/min.	4100 Nl/min.	13200 Nl/min.
Filtration grade	5 µm (standard) 40 µm (40)		
Cup capacity	125 cm^3	130 cm^3	220 cm^3
Suggested lubricant	With viscosity ISO VG 32 compliant to ISO 3448 standards		
Weight	1200 g	1750 g	3360 g

Notes

Supplied complete with AISI 316 stainless steel mounting bracket and screw.
***Warning:** with option D the maximum inlet pressure is 10 bar.

Standard dimensions

II 2G Ex h IIC T6 Gb
II 2D Ex h IIIC T85° Db

Type: **A14LX**

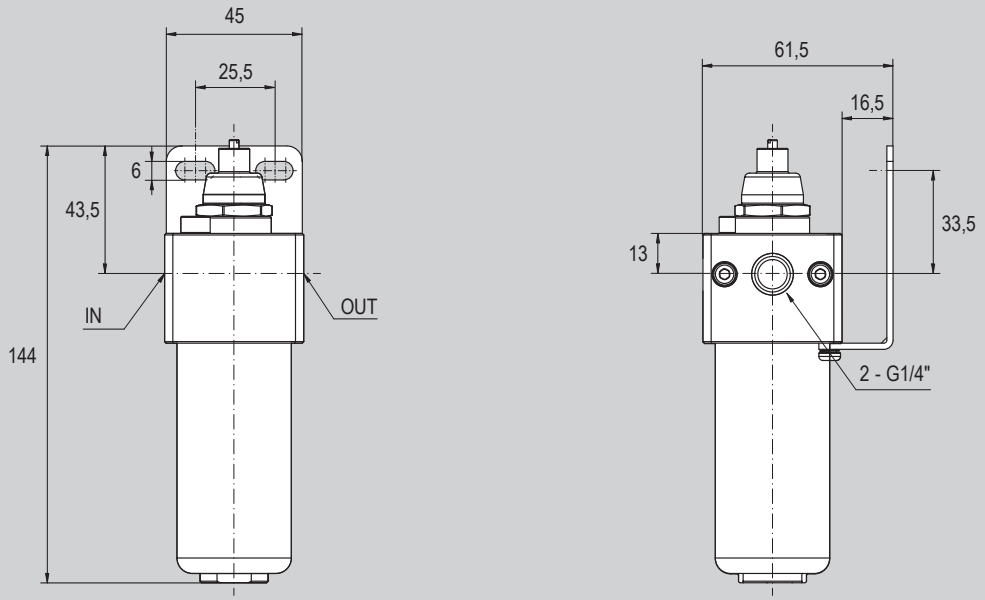

Size	Function	Symbol	Code	Item
1/4"	Lubricator		090613	A14LX

Standard dimensions

II 2G Ex h IIC T6 Gb
II 2D Ex h IIIC T85° Db

Type: **A12LX**

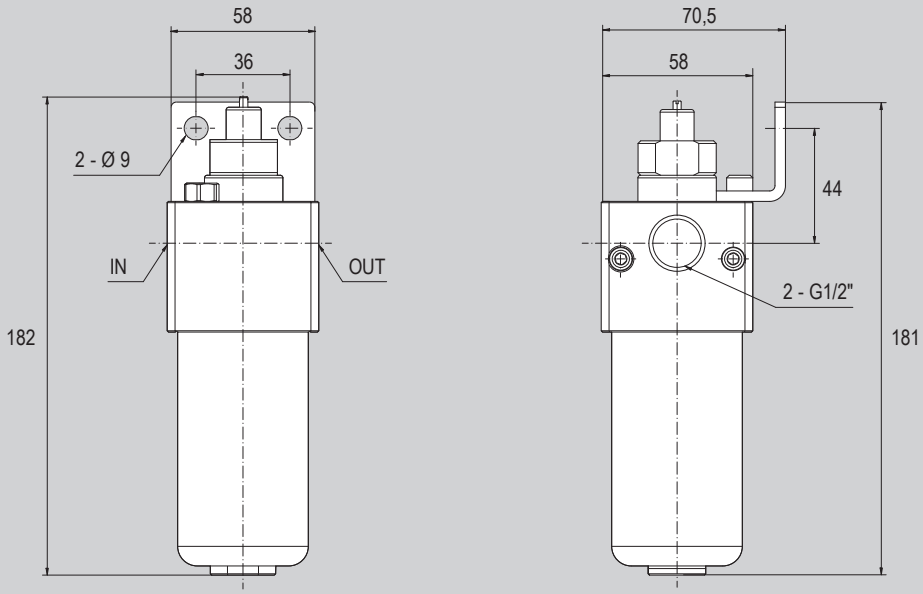

Size	Function	Symbol	Code	Item
1/2"	Lubricator		090614	A12LX

Standard dimensions

II 2G Ex h IIC T6 Gb
II 2D Ex h IIIC T85° Db

Type: **A01LX**

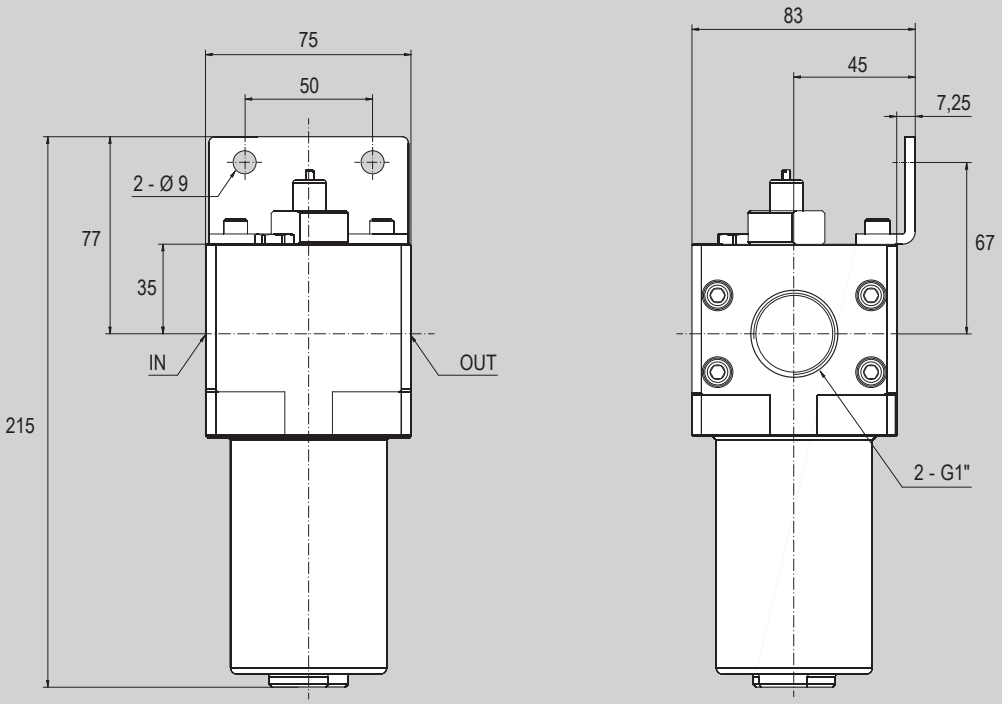

Size	Function	Symbol	Code	Item
1"	Lubricator		090615	A01LX

Stainless Steel modular units
Filter-regulators, 1/4" ÷ 1"

Main features

Code	Item	Size	Function	Symbol
090601	A14FRRX	1/4"	Filter-regulator	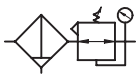
090602	A12FRRX	1/2"		
090603	A01FRRX	1"		



Technical data

Type	A14FRRX	A12FRRX	A01FRRX
Size	1/4"	1/2"	1"
Fluid	Compressed air		
Maximum inlet pressure	0÷30 bar (standard) 0÷10 bar (D)*	0÷60 bar (standard) 0÷10 bar (D)*	
Pressure regulation range	0,5÷20 bar	0,5÷12 bar (standard) 12÷30 bar (HP)	0,5÷12 bar (standard) 12÷28 bar (HP)
Temperature range	-10°C ÷ +70°C (standard) -40°C ÷ +70°C (BT)		
Maximum flow at 6 bar with 40 µm cartridge	1850 Nl/min.	3800 Nl/min.	8900 Nl/min.
Filtration grade	5 µm (standard) 40 µm (40)		
Cup capacity	105 cm^3	110 cm^3	200 cm^3
Pressure regulator	Piston		
Overpressure relief	Relieving M5		
Condense drain	Semi-automatic (standard) Automatic (D) Manual (H)		
Gauges port	1/8"	1/4"	
Weight	1380 g	2000 g	4580 g

Notes

Supplied complete with AISI 316 stainless steel pressure-gauge, mounting bracket and screw.
***Warning:** with option D the maximum inlet pressure is 10 bar.

Standard dimensions

II 2G Ex h IIC T6 Gb
II 2D Ex h IIIC T85° Db

Type: **A14FRRX**

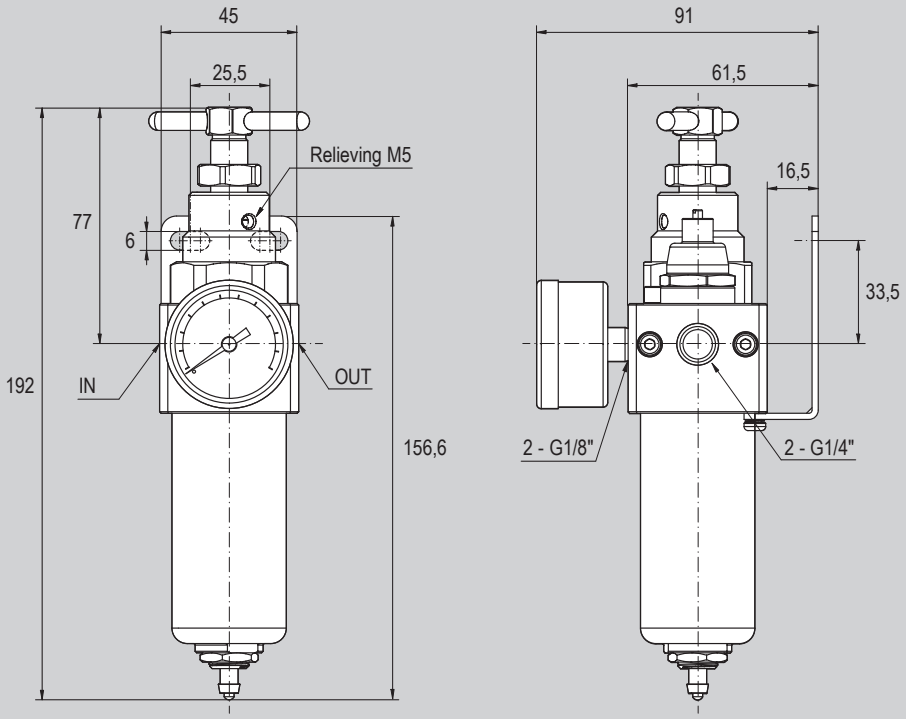

Size	Function	Symbol	Code	Item
1/4"	Filter-regulator	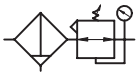	090601	A14FRRX

Standard dimensions

II 2G Ex h IIC T6 Gb
II 2D Ex h IIIC T85° Db

Type: **A12FRRX**

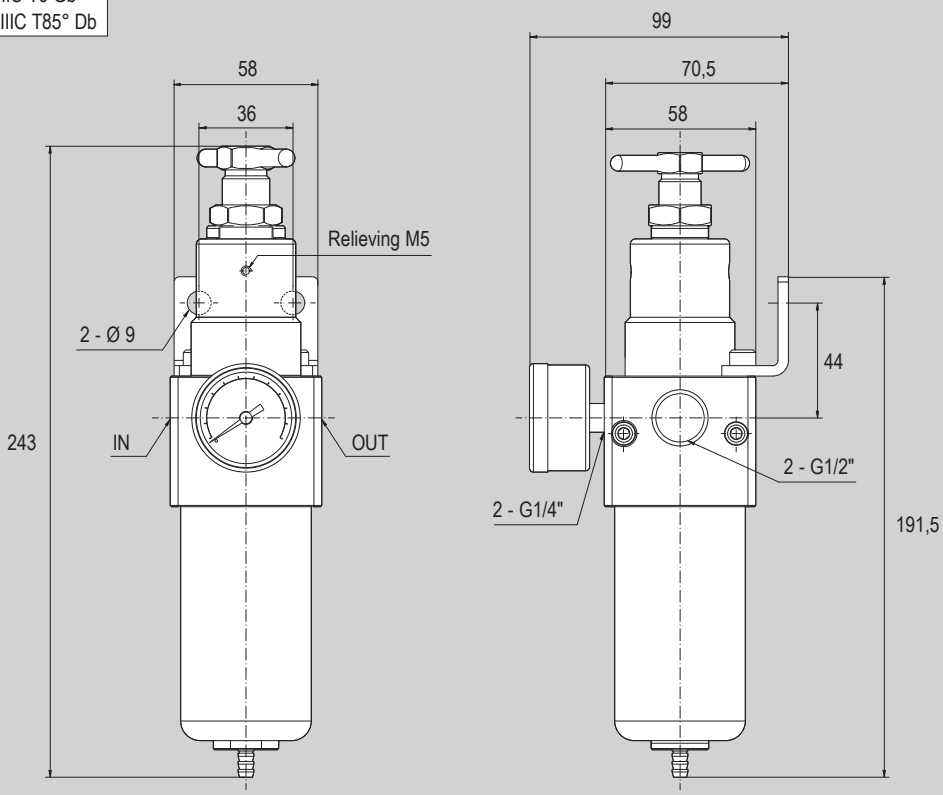

Size	Function	Symbol	Code	Item
1/2"	Filter-regulator	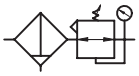	090602	A12FRRX

Standard dimensions

II 2G Ex h IIC T6 Gb
II 2D Ex h IIIC T85° Db

Type: **A01FRRX**

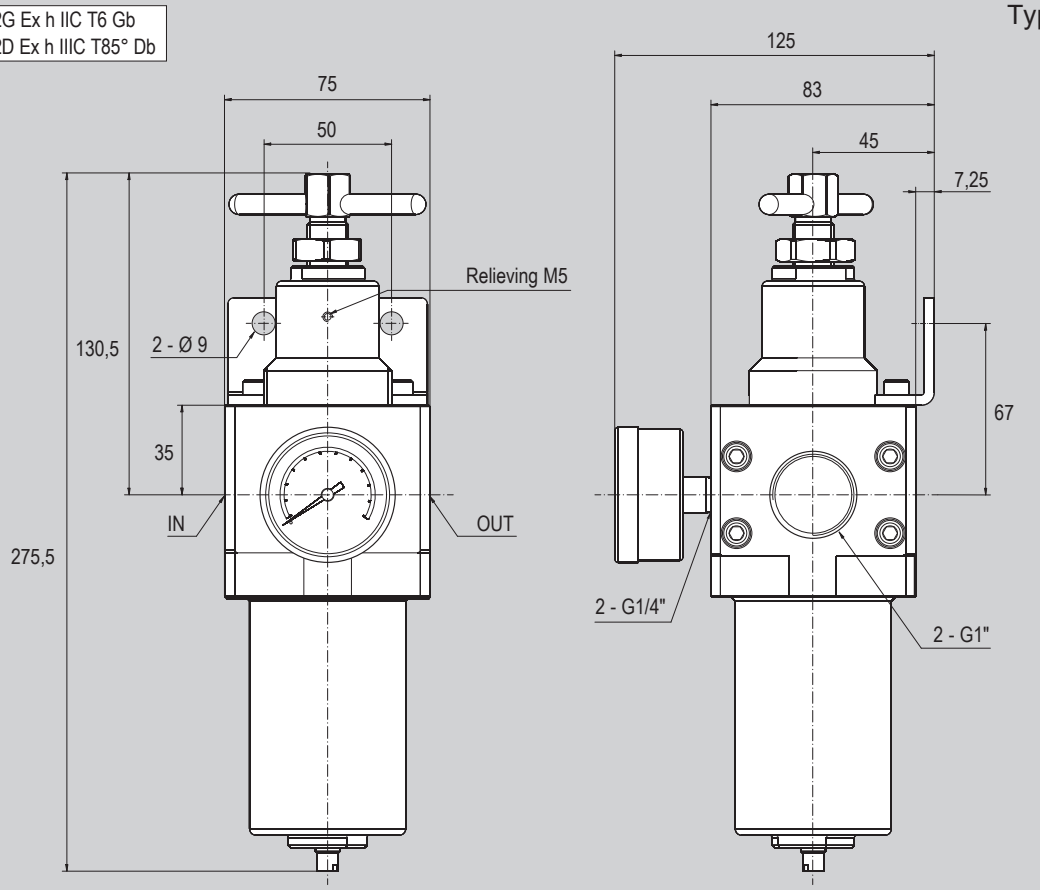

Size	Function	Symbol	Code	Item
1"	Filter-regulator	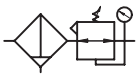	090603	A01FRRX

Stainless Steel modular units

Filter-regulators + lubricators, 1/4" ÷ 1"

Main features

Code	Item	Size	Function	Symbol
090604	A14FRRLX	1/4"	Filter-regulator + lubricator	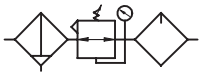
090605	A12FRRLX	1/2"		
090606	A01FRRLX	1"		



Technical data

Type		A14FRRX	A12FRRX	A01FRRX
Size		1/4"	1/2"	1"
Fluid		Compressed air		
Maximum inlet pressure		0÷30 bar (standard) 0÷10 bar (D)*	0÷60 bar (standard) 0÷10 bar (D)*	
Pressure regulation range		0,5÷20 bar	0,5÷12 bar (standard) 12÷30 bar (HP)	0,5÷12 bar (standard) 12÷28 bar (HP)
Temperature range		-10°C ÷ +70°C (standard) -40°C ÷ +70°C (BT)		
Maximum flow at 6 bar with 40 µm cartridge		1850 Nl/min.	2500 Nl/min.	8000 Nl/min.
Filtration grade		5 µm (standard) 40 µm (40)		
Cup capacity	Filter	105 cm^3	110 cm^3	200 cm^3
	Lubricator	125 cm^3	130 cm^3	220 cm^3
Pressure regulator		Piston		
Overpressure relief		Relieving M5		
Condense drain		Semi-automatic (standard) Automatic (D) Manual (H)		
Suggested lubricant		With viscosity ISO VG 32 compliant to ISO 3448 standards		
Gauges port		1/8"	1/4"	
Weight		2660 g	3840 g	7960 g

Notes

Supplied complete with AISI 316 stainless steel pressure-gauge, mounting bracket and screw.
***Warning:** with option D the maximum inlet pressure is 10 bar.

Standard dimensions

II 2G Ex h IIC T6 Gb
II 2D Ex h IIIC T85° Db

Type: **A14FRRLX**

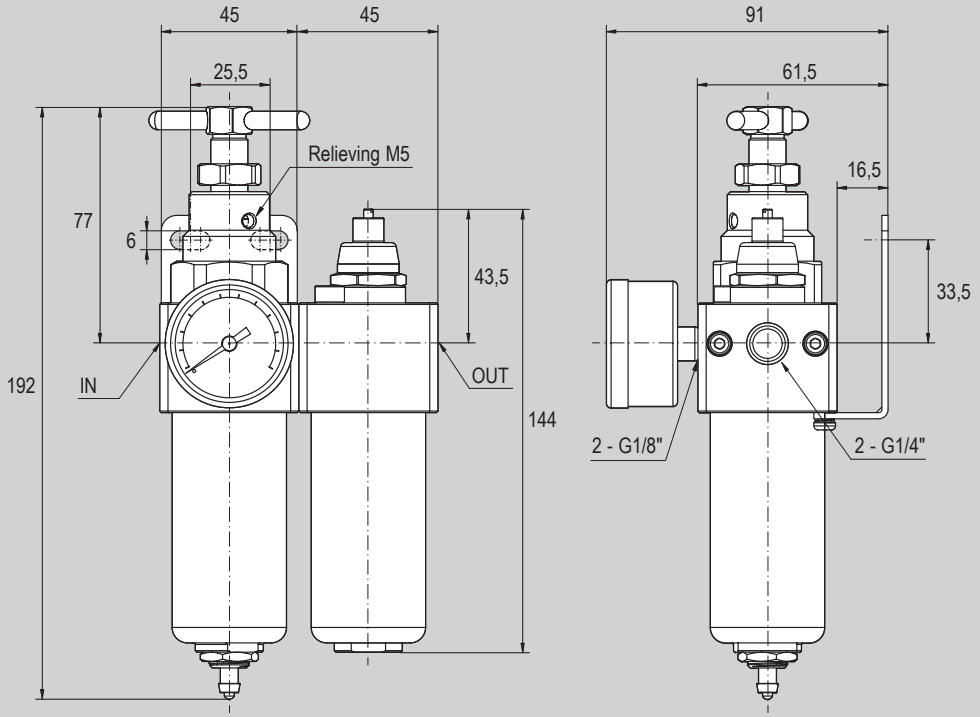

Size	Function	Symbol	Code	Item
1/4"	Filter-regulator + lubricator	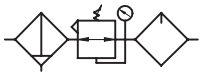	090604	A14FRRLX

Standard dimensions

II 2G Ex h IIC T6 Gb
II 2D Ex h IIIC T85° Db

Type: **A12FRRLX**

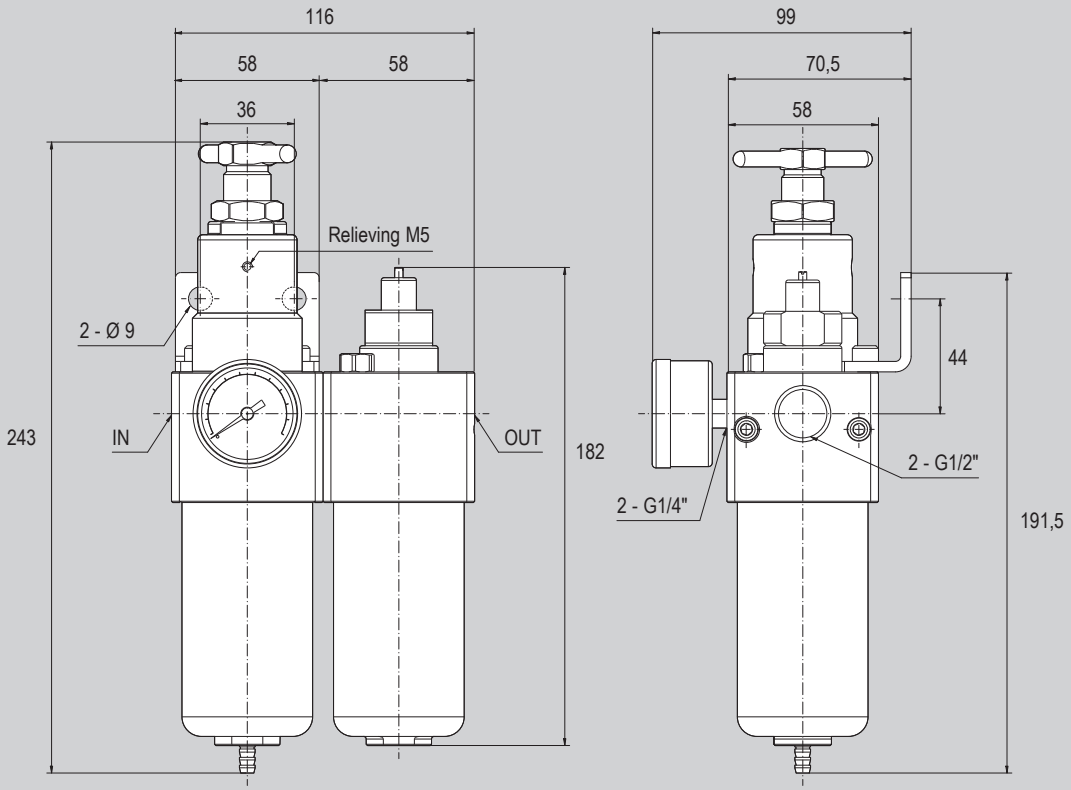

Size	Function	Symbol	Code	Item
1/2"	Filter-regulator + lubricator	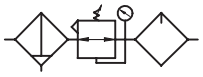	090605	A12FRRLX

Standard dimensions

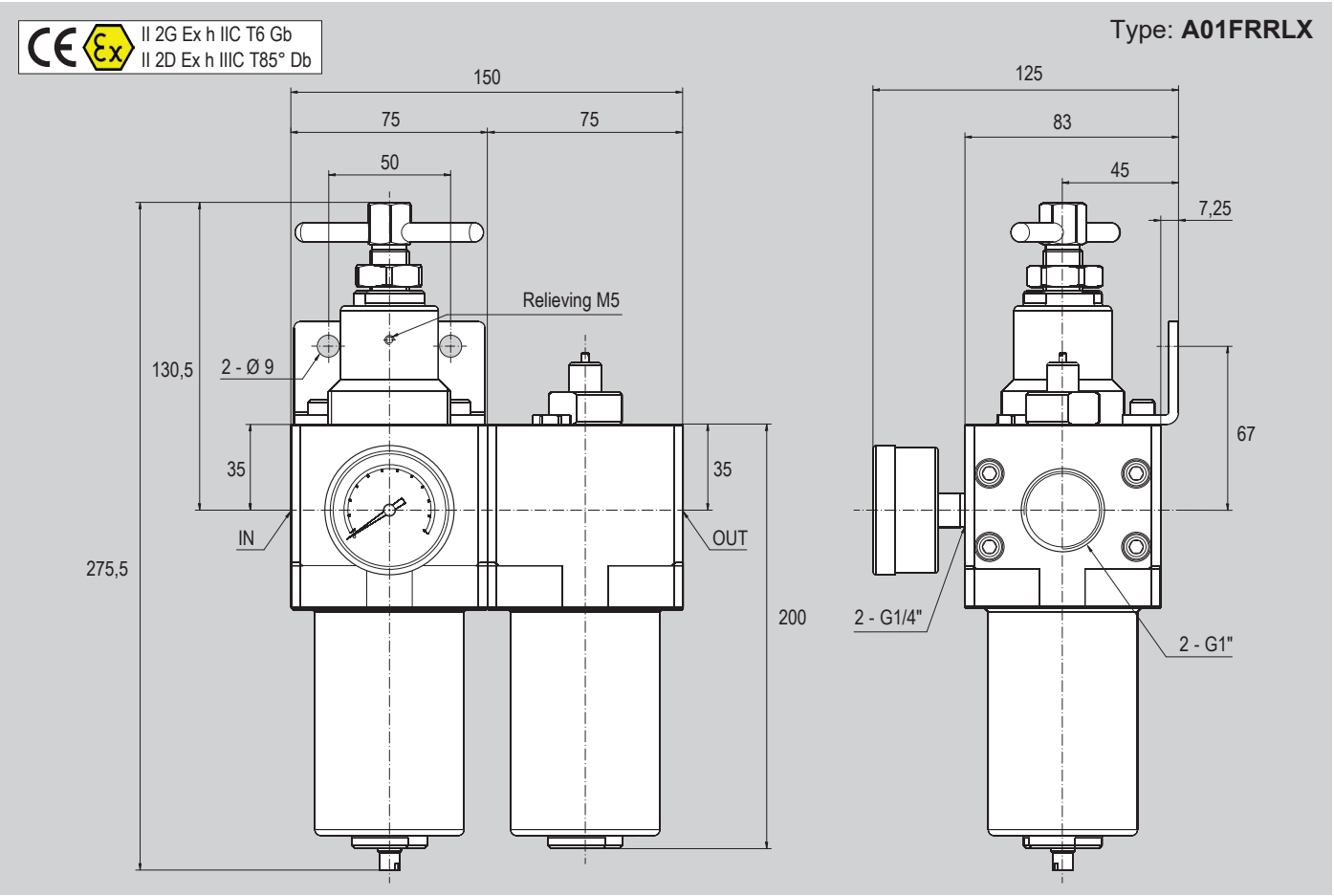

Size	Function	Symbol	Code	Item
1"	Filter-regulator + lubricator	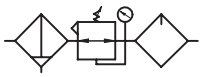	090606	A01FRRLX

STAINLESS STEEL
push-in fittings



Find out our
key products

- **Solution for most applications**
- **Easy and intuitive choice**
- **Excellent value for money**
- **Wide availability**
- **Fast delivery**

Main features and certifications

Stainless Steel push-in fittings. Available in different versions, threads and for different tube sizes.
Supplied conforming to Reach and RoHS directives. Lubricated with synthetic grease long lasting and fully composed by non-toxic elements conforming to FDA Directive section 21 CFR 178 about accidental contact with food (registered NSF H1).

Series RX

from page 5.302.10



Stainless Steel push in fittings, with reduced dimensions, for connecting PVDF, PTFE or Stainless Steel tubes, with new collet and release collet design. Available in different configurations, with taper BSPT threads and BSP with O-ring, in various sizes. Stud threaded versions are supplied as standard with internal and external hexagonal wrench (for narrow places mounting).

Stainless Steel push-in fittings
Series RX







Code key

Series	Type*	Tube Diameter*	Thread (or Tube Diameter 2)*
RX	**11**	**08**	**18**
RX	11, 12, 13, 14, 15, 16, 20, 21, 25, 26, 27, 28, 29, 31, 35	04 = Ø 4 mm 06 = Ø 6 mm 08 = Ø 8 mm 10 = Ø 10 mm 12 = Ø 12 mm	M5 = M5x0,8 18 = 1/8" 14 = 1/4" 38 = 3/8" 12 = 1/2"

How to order

Series	Type	Ø Tube	Thread
RX	**11**	**08**	**18**

Notes

* For matching between fitting type, tube diameter and thread, see from page 5.302.11; for the specific type, see the following pages.

For standard materials see the table below

Technical data

Version		Series RX
Fluid		Compressed air
Maximum pressure		20 bar
Vacuum		-99 KPa
Temperature range		-20°C ÷ +180°C
Parallel threads		UNI - ISO 228 / 1 (BSP)
Taper threads		UNI EN 10226-1 (BSPT)
Metric threads		UNI EN ISO 965-1
Tubes		PVDF, PTFE or in Stainless Steel
Tubes tolerance	Ø 4 ÷ Ø 8	±0,7 mm
	Ø 10 ÷ Ø 12	±0,1 mm

Standard materials

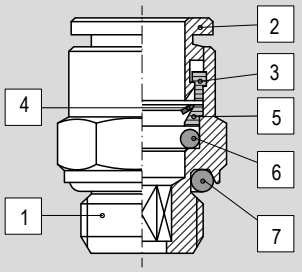

Position	Description	Material
1	Body	Stainless Steel AISI 316L
2	Release collar	Stainless Steel AISI 316L
3	Sealing ring	Stainless Steel AISI 316L
4	Collet	Stainless Steel AISI 301
5	Protection ring	Stainless Steel AISI 316L
6, 7*	Seals	FKM (according to FDA)

*O-ring only for types with BSP thread

Fittings series RX

Type			Taper threads (BSPT)	Parallel threads (BSP)	Metric threads	For tube Ø mm	Stem Ø mm	Data sheet and code page
RX11	BSPT stud		1/8", 1/4", 3/8", 1/2"	-	-	4, 6, 8, 10, 12	-	5.302.12
RX12	BSP stud		-	1/8", 1/4", 3/8", 1/2"	M5x0,8	4, 6, 8, 10, 12	-	5.302.12
RX13	Female BSP stud		-	1/8", 1/4", 3/8", 1/2"		4, 6, 8, 10, 12		5.302.13
RX25	Increaser and stem reducer		-	-	-	4, 6, 8	6, 8, 10	5.302.13
RX26	Union		-	-	-	4, 6, 8, 10, 12	-	5.302.14
RX27	Bulkhead		-	-	-	4, 6, 8, 10, 12	-	5.302.14
RX14	BSPT elbow		1/8", 1/4"	-	-	4, 6, 8, 10	-	5.302.15
RX15	BSPT swivel elbow		1/8", 1/4", 3/8", 1/2"	-	-	4, 6, 8, 10, 12	-	5.302.15
RX16	BSP swivel elbow		-	1/8", 1/4", 3/8", 1/2"	M5x0,8	4, 6, 8, 10, 12	-	5.302.16
RX28	Equal elbow		-	-	-	4, 6, 8, 10, 12	-	5.302.16
RX20	BSPT swivel tee		1/8", 1/4", 3/8", 1/2"	-	-	4, 6, 8, 10, 12	-	5.302.17
RX21	BSP swivel tee		-	1/8", 1/4", 3/8", 1/2"	M5x0,8	4, 6, 8, 10, 12	-	5.302.17
RX29	Equal tee		-	-	-	4, 6, 8, 10, 12	-	5.302.18
RX31	Single hollow bolt		-	1/8", 1/4", 3/8", 1/2"	-	-	-	5.302.18
RX35	Single banjo		-	1/8", 1/4", 3/8", 1/2"	-	4, 6, 8, 10, 12	-	5.302.19

Matching thread/tube

Tube diameter (external)	Thread								
	M5x0,8	G1/8"	G1/4"	G3/8"	G1/2"	R1/8"	R1/4"	R3/8"	R1/2"
Ø 4 mm	●	●	●	-	-	●	●	-	-
Ø 6 mm	●	●	●	-	-	●	●	-	-
Ø 8 mm	-	●	●	●	-	●	●	●	-
Ø 10 mm	-	-	●	●	●	-	●	●	●
Ø 12 mm	-	-	●	●	●	-	●	●	●

Key
● available matching; - not available matching

Stainless Steel push-in fittings
Series RX

Main features

Type	Description
RX11	BSPT stud. In AISI 316L Stainless Steel.



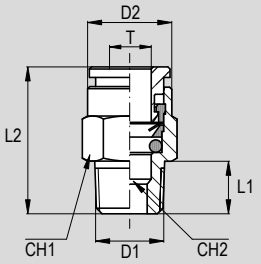

Dimensions

Code	Item	T (ØTube)	D1	D2	L1	L2	CH1	CH2	Weight (g)
020901	RX110418	4	R1/8”	9	7,5	16,5	10	3	6,3
020902	RX110414	4	R1/4”	9	11	20,5	14	3	16,1
020903	RX110618	6	R1/8”	11,7	7,5	21	12	4	9,5
020904	RX110614	6	R1/4”	12	11	20,5	14	4	14,3
020905	RX110818	8	R1/8”	13,7	7,5	25	14	6	13,5
020906	RX110814	8	R1/4”	13,7	11	23,5	14	6	14,4
020806	RX110838	8	R3/8”	13,9	11,5	22,5	17	6	23,7
020907	RX111014	10	R1/4”	15,7	11	30,5	16	8	20,3
020908	RX111038	10	R3/8”	16	11,5	24	17	8	21,5
020807	RX111012	10	R1/2”	15,7	14	27	22	8	-
020808	RX111214	12	R1/4”	18,7	11	32	19	8	-
020910	RX111238	12	R3/8”	18,7	11,5	27,5	19	10	25,7
020909	RX111212	12	R1/2”	19	14	27,5	22	10	42,1

Main features

Type	Description
RX12	BSP stud. In AISI 316L Stainless Steel. With FKM O-ring.



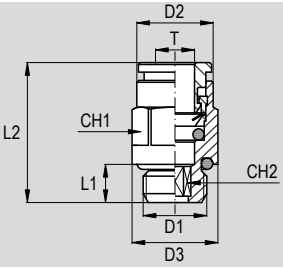

Dimensions

Code	Item	T (ØTube)	D1	D2	D3	L1	L2	CH1	CH2	Weight (g)
020915	RX1204M5	4	M5x0,8	9	8	4	19	9	-	4,9
020916	RX120418	4	G1/8”	9	12,9	5	16,5	13	3	8,1
020809	RX1206M5	6	M5x0,8	11,8	8	4	22,5	12	-	10,3
020917	RX120618	6	G1/8”	11,7	12,9	5	19,5	13	4	9,5
020918	RX120614	6	G1/4”	11,7	15,8	6,5	19,5	16	4	15,8
020919	RX120818	8	G1/8”	13,7	12,9	5	23	14	6	12,8
020920	RX120814	8	G1/4”	13,7	15,9	6,5	21,5	16	6	15,5
020810	RX120838	8	G3/8”	13,7	20	7	21,5	17	6	-
020911	RX121014	10	G1/4”	15,7	15,8	6,5	27,5	16	8	19,2
020912	RX121038	10	G3/8”	16	20	7	25	17	8	24,4
020811	RX121012	10	G1/2”	15,8	25	8,5	25,5	22	8	-
020812	RX121214	12	G1/4”	18,8	16	6,5	28,5	19	8	-
020913	RX121238	12	G3/8”	18,8	20	7	28	21	10	31,8
020914	RX121212	12	G1/2”	18,8	25	8.,5	26,5	22	10	41,8

Main features

Type	Description
RX13	Female BSP stud. In AISI 316L Stainless Steel.



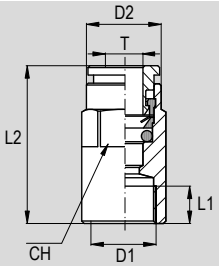

Dimensions

Code	Item	T (ØTube)	D1	D2	L1	L2	CH	Weight (g)
020813	RX130418	4	G1/8”	9	7	24,5	13	-
020814	RX130618	6	G1/8”	12	7	26,5	13	-
020815	RX130614	6	G1/4”	12	10	31	16	-
020816	RX130818	8	G1/8”	13,8	7	26,5	14	18,2
020817	RX130814	8	G1/4”	14	10	31	16	-
020818	RX130838	8	G3/8”	14	11	32,5	21	-
020819	RX131014	10	G1/4”	15,7	10	33	16	24
020820	RX131038	10	G3/8”	16	11	34,5	21	-
020821	RX131012	10	G1/2”	16	11	36	24	-
020822	RX131238	12	G3/8”	19	11	35,5	21	77,5
020823	RX131212	12	G1/2”	19	11	37	24	-

Main features

Type	Description
RX25	Increaser and stem reducer. In AISI 316L Stainless Steel.



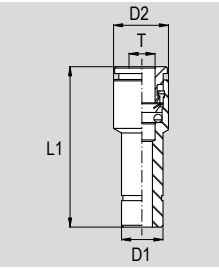

Dimensions

Code	Item	T (ØTube)	D1	D2	L1	Weight (g)
020921	RX250406	4	6	9	30,5	6,5
020922	RX250608	6	8	12	32	11,9
020923	RX250810	8	10	14	35	14,8

Main features

Type	Description
RX26	Union. In AISI 316L Stainless Steel.



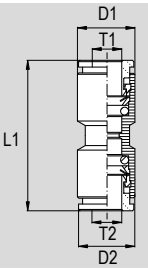

Dimensions

Code	Item	T1 (ØTube)	T2 (ØTube)	D1	D2	L1	Weight (g)
020925	RX260404	4	4	9	9	28	7,8
020924	RX260604	6	4	12	12	31	15,5
020926	RX260606	6	6	12	12	33,6	15,7
020935	RX260806	8	6	14	14	34	23,8
020927	RX260808	8	8	14	14	34	19,5
020824	RX261008	10	8	16	14	37,1	-
020928	RX261010	10	10	16	16	38,6	24,9
020825	RX261210	12	10	19	16	40,3	-
020929	RX261212	12	12	19	19	41	40

Main features

Type	Description
RX27	Bulkhead. In AISI 316L Stainless Steel.



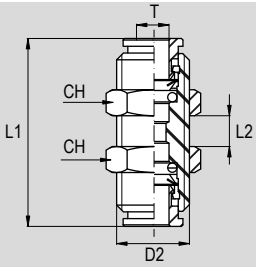

Dimensions

Code	Item	T (ØTube)	D2	L1	L2 (max)	CH	Weight (g)
020930	RX270404	4	M12x1	28	11,5	16	19,9
020931	RX270606	6	M14x1	34	15,5	17	31,4
020932	RX270808	8	M16x1	34	15,5	19	36,8
020933	RX271010	10	M18x1	39	18,5	21	48,4
020934	RX271212	12	M20x1	41	20,5	24	61,8

Main features

Type	Description
RX14	BSPT elbow. In AISI 316L Stainless Steel.



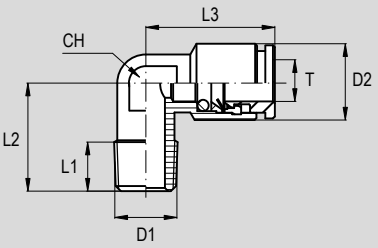

Dimensions

Code	Item	T (ØTube)	D1	D2	L1	L2	L3	CH	Weight (g)
020956	RX140418	4	R1/8”	9	9,8	17	17,5	8	10,2
020957	RX140618	6	R1/8”	12	9,8	17	20,5	10	14
020958	RX140614	6	R1/4”	12	11,3	20,7	20,5	10	20,8
020959	RX140818	8	R1/8”	14	9,5	18	22,5	12	19,6
020949	RX140814	8	R1/4”	14	11,3	20,7	22,5	12	22,3
020946	RX141014	10	R1/4”	16	12,1	21,5	24,5	14	39,5

Main features

Type	Description
RX15	BSPT swivel elbow. In AISI 316L Stainless Steel.



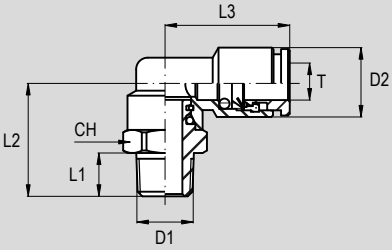

Dimensions

Code	Item	T (ØTube)	D1	D2	L1	L2	L3	CH	Weight (g)
020936	RX150418	4	R1/8”	9	7,5	18	17,5	10	10,8
020937	RX150618	6	R1/8”	12	7,5	20,5	21,5	13	21,2
020938	RX150614	6	R1/4”	12	11	24,5	21,5	14	25,2
020939	RX150818	8	R1/8”	14	7,5	20,5	22,5	13	22,2
020940	RX150814	8	R1/4”	14	11	24,5	22,5	14	26,3
020826	RX150838	8	R3/8”	14	11,5	25	22,5	17	-
020941	RX151014	10	R1/4”	16	11	27	26	16	37,5
020942	RX151038	10	R3/8”	16	11,5	27,5	26	17	41,1
020827	RX151012	10	R1/2”	16	14	32	26	22	-
020828	RX151214	12	R1/4”	19	11	30,5	28,5	21	-
020943	RX151238	12	R3/8”	19	11,5	31	28,5	21	65,1
020944	RX151212	12	R1/2”	19	14	34	28,5	22	71,5

Main features

Type	Description
RX16	BSP swivel elbow. In AISI 316L Stainless Steel. With FKM O-ring.



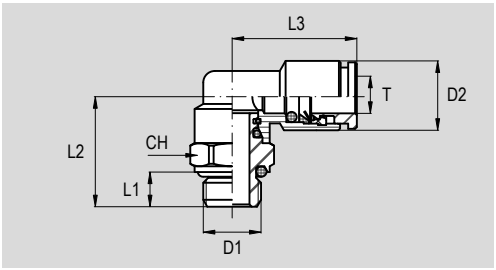

Dimensions

Code	Item	T (ØTube)	D1	D2	L1	L2	L3	CH	Weight (g)
020950	RX1604M5	4	M5x0,8	9	4	14,5	17,5	9	8,7
020951	RX160418	4	G1/8"	9	5	16,5	17,5	13	12,2
020829	RX1606M5	6	M5x0,8	12	4	15,5	20,5	9	13,2
020952	RX160618	6	G1/8"	12	5	18,5	21,5	13	20,3
020953	RX160614	6	G1/4"	12	6,5	20,5	21,5	16	24,3
020954	RX160818	8	G1/8"	14	5	18,5	22,5	13	21,6
020955	RX160814	8	G1/4"	14	6,5	20,5	22,5	16	25,8
020830	RX160838	8	G3/8"	14	7	22,5	22,5	21	-
020947	RX161014	10	G1/4"	16	6,5	22,5	26	16	34,6
020983	RX161038	10	G3/8"	16	7	24	26	21	41
020838	RX161012	10	G1/2"	16	8,5	29	26	22	-
020839	RX161214	12	G1/4"	19	6,5	26	28,5	21	-
020984	RX161238	12	G3/8"	19	7	26,5	28,5	21	59,5
020985	RX161212	12	G1/2"	19	8,5	31	28,5	22	69,2

Main features

Type	Description
RX28	Equal elbow. In AISI 316L Stainless Steel.



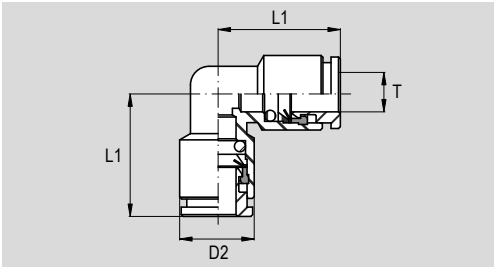

Dimensions

Code	Item	T (ØTube)	D2	L1	Weight (g)
020960	RX280404	4	9	17,5	11,7
020961	RX280606	6	12	21	18
020962	RX280808	8	14	22,5	24,1
020963	RX281010	10	16	24,5	43
020964	RX281212	12	18	27	49,3

Main features

Type	Description
RX20	BSPT swivel tee. In AISI 316L Stainless Steel.



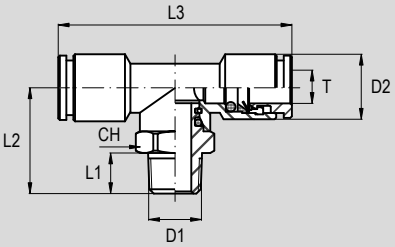

Dimensions

Code	Item	T (ØTube)	D1	D2	L1	L2	L3	CH	Weight (g)
020966	RX200418	4	R1/8”	9	7,5	21,5	35	10	16,1
020967	RX200618	6	R1/8”	12	7,5	20,5	43	13	30,3
020968	RX200614	6	R1/4”	12	11	24,5	43	14	33,9
020969	RX200818	8	R1/8”	14	7,5	20,5	43	13	32,2
020970	RX200814	8	R1/4”	14	11	24,5	43	14	35,5
020971	RX201014	10	R1/4”	16	11	27,5	51	16	61
020972	RX201038	10	R3/8”	16	11,5	28	51	17	64,1
020840	RX201238	12	R3/8”	19	11,5	31	57	21	-
020841	RX201212	12	R1/2”	19	14	34	57	22	-

Main features

Type	Description
RX21	BSP swivel tee. In AISI 316L Stainless Steel. With FKM O-ring.



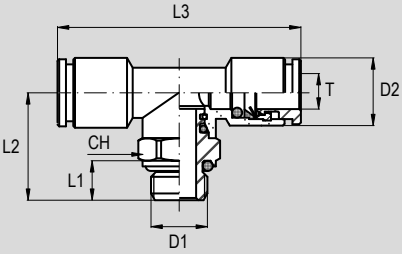

Dimensions

Code	Item	T (ØTube)	D1	D2	L1	L2	L3	CH	Weight (g)
020974	RX2104M5	4	M5x0,8	9	4	18	35	9	14
020975	RX210418	4	G1/8”	9	5	20	35	13	17,6
020976	RX210618	6	G1/8”	12	5	18,5	43	13	29,2
020977	RX210614	6	G1/4”	12	6,5	20,5	43	16	33,3
020978	RX210818	8	G1/8”	14	5	18,5	43	13	30,7
020979	RX210814	8	G1/4”	14	6,5	20,5	43	16	34,8
020986	RX211014	10	G1/4”	16	6,5	22,5	51	16	57,1
020987	RX211038	10	G3/8”	16	7	24,5	51	21	63,9
020842	RX211238	12	G3/8”	19	7	26,5	57	21	-
020843	RX211212	12	G1/2”	19	8,5	31	57	22	-

Main features

Type	Description
RX29	Equal tee. In AISI 316L Stainless Steel.



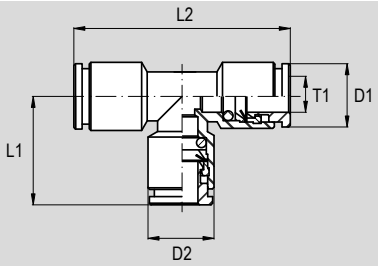

Dimensions

Code	Item	T1 (ØTube)	D2	L1	L2	Weight (g)
020995	RX290404	4	9	17,5	35	14,6
020996	RX290606	6	12	21	42	29,9
020997	RX290808	8	14	21,5	43	32,4
020998	RX291010	10	16	24,5	49	56,1
020999	RX291212	12	18	27	54	65,9

Main features

Type	Description
RX31	Single hollow bolt. In AISI 316L Stainless Steel, with parallel PTFE washer. Compatible with banjo type RX35.



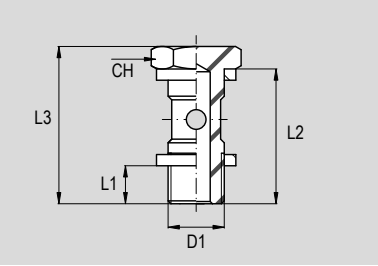

Dimensions

Code	Item	D1	L1	L2	L3	CH	Weight (g)
020980	RX310018	G1/8”	5,4	24,9	28,9	14	15,1
020948	RX310014	G1/4”	6,4	27,4	32,4	17	26,1
020988	RX310038	G3/8”	6,4	30	36	21	43,6
020989	RX310012	G1/2”	7,5	35,5	41,5	26	76,5

Main features

Type	Description
RX35	Single banjo. In AISI 316L Stainless Steel. Compatible with bolts type RX31. Compatible with flow regulators type VX15.



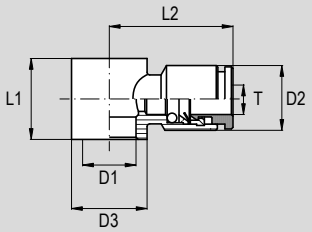

Dimensions

Code	Item	T (ØTube)	D1	D2	D3	L1	L2	Weight (g)
020982	RX350418	4	1/8”	9	14	15	20,5	13,1
020981	RX350618	6	1/8”	12	14	15	22,5	16,1
020973	RX350614	6	1/4”	12	17	17	24	18,7
020965	RX350818	8	1/8”	14	14	15	23	16,6
020945	RX350814	8	1/4”	14	17	17	25	20,4
020990	RX351014	10	1/4”	16	17	17	27	23,1
020991	RX351038	10	3/8”	16	22	20	29	35,5
020992	RX351238	12	3/8”	16	22	20	31	40,8
020993	RX351212	12	1/2”	19	26	24	33	52,2

STAINLESS STEEL
rapid fittings



Find out our
key products

- **Solution for most applications**
- **Easy and intuitive choice**
- **Excellent value for money**
- **Wide availability**
- **Fast delivery**

Main features and certifications

Stainless Steel rapid fittings. Available in different versions, threads and for different tube sizes.
Supplied conforming to Reach and RoHS directives. Lubricated with synthetic grease long lasting and fully composed by non-toxic elements conforming to FDA Directive section 21 CFR 178 about accidental contact with food (registered NSF H1).

Series CX

from page 5.304.10



Series of stainless steel rapid fittings, with reduced dimensions, for connecting PTFE tubes, suitable for applications with high temperatures or aggressive fluids. Available in different configurations, with taper BSPT threads and BSP, in various sizes.

Stainless Steel rapid fittings
Series CX



Code key

Series	Type*	Tube Diameter*	Thread (or Tube Diameter 2)*
CX	**11**	**08**	**18**
CX	11, 14, 13, 15, 16, 18, 19, 20, 21, 27	06 = Ø 6 - 4 08 = Ø 8 - 6 10 = Ø 10 - 8 12 = Ø 12 - 10	18 = 1/8" 14 = 1/4" 38 = 3/8" 12 = 1/2"

How to order

Series	Type	Ø Tube	Thread
CX	**11**	**08**	**18**

Notes

*For matching between fitting type, tube diameter and thread, see from page 5.304.11; for the specific type, see the following pages.

For standard materials see the table below

Technical data

Version		Series CX
Fluid		All fluids compatible with stainless steel
Maximum pressure		25 bar
Vacuum		-99 KPa
Temperature range		-40°C ÷ +250°C
Parallel threads		UNI - ISO 228 / 1 (BSP)
Taper threads		UNI EN 10226-1 (BSPT)
Tubes		PTFE (suggested)
Tubes tolerance	Ø 6 ÷ Ø 10	±0,7 mm
	Ø 12	±0,1 mm

Standard materials

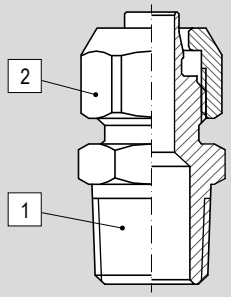

Position	Description	Material
1	Body	Stainless Steel AISI 316L
2	Nut	Stainless Steel AISI 316L
-	Seals*	FKM (according to FDA)

*Where present

Fittings series CX

Type			Taper threads (BSPT)	Parallel threads (BSP)	For tube Ø mm	Data sheet and code page
CX11	BSPT stud		1/8", 1/4", 3/8", 1/2"	-	6-4, 8-6, 10-12, 12-10	5.304.12
CX13	Female BSP stud		-	1/8", 1/4", 3/8", 1/2"	6-4, 8-6, 10-12, 12-10	5.304.12
CX14	Union		-	-	6-4, 8-6, 10-12, 12-10	5.304.13
CX16	BSPT elbow		1/8", 1/4", 3/8", 1/2"	-	6-4, 8-6, 10-12, 12-10	5.304.13
CX15	BSPT swivel elbow		1/8", 1/4", 3/8"	-	6-4, 8-6, 10-12	5.304.14
CX18	Equal elbow		-	-	6-4, 8-6, 10-12, 12-10	5.304.14
CX19	Equal tee		-	-	6-4, 8-6, 10-12, 12-10	5.304.15
CX20	BSPT tee		1/8", 1/4", 3/8", 1/2"	-	6-4, 8-6, 10-12, 12-10	5.304.15
CX21	BSPT side tee		1/8", 1/4", 3/8", 1/2"	-	6-4, 8-6, 10-12, 12-10	5.304.16
CX27	Nut		-	-	6-4, 8-6, 10-12, 12-10	5.304.16

Matching thread/tube

Tube diameter (external)	Thread							
	G1/8"	G1/4"	G3/8"	G1/2"	R1/8"	R1/4"	R3/8"	R1/2"
Ø 6-4	●	●	-	-	●	●	-	-
Ø 8-6	●	●	●	-	●	●	-	-
Ø 10-8	-	●	●	-	-	●	●	-
Ø 12-10	-	-	●	●	-	●	●	●

Key
● available matching; - not available matching

Main features

Type	Description
CX11	BSPT stud. In AISI 316L Stainless Steel.



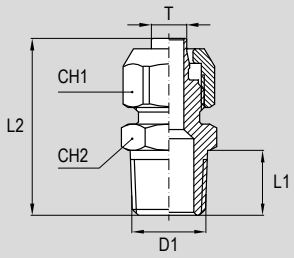

Dimensions

Code	Item	T (ØTube)	D1	L1	L2	CH1	CH2	Weight (g)
021560	CX110618	6-4	R1/8"	7,5	26	12	10	11,8
021561	CX110614	6-4	R1/4"	11	29,5	12	14	17,5
021562	CX110818	8-6	R1/8"	7,5	26,5	14	13	16,5
021563	CX110814	8-6	R1/4"	11	30	14	14	20,3
021564	CX111014	10-8	R1/4"	11	32,5	16	14	23,6
021565	CX111038	10-8	R3/8"	11,5	33	16	17	29,9
021594	CX111214	12-10	R1/4"	11	34	19	17	34,8
021595	CX111238	12-10	R3/8"	11,5	34,5	19	17	-
021596	CX111212	12-10	R1/2"	14	38	19	22	-

Main features

Type	Description
CX13	Female BSP stud. In AISI 316L Stainless Steel.



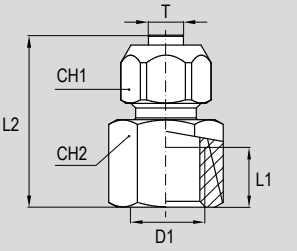

Dimensions

Code	Item	T (ØTube)	D1	L1	L2	CH1	CH2	Weight (g)
021597	CX130618	6-4	G1/8"	7	25	12	13	14,6
021598	CX130614	6-4	G1/4"	10	28,5	12	17	22,8
021599	CX130818	8-6	G1/8"	7	25,5	14	13	-
021612	CX130814	8-6	G1/4"	10	29,5	14	17	26,9
021613	CX130838	8-6	G3/8"	11	31	14	21	-
021614	CX131014	10-8	G1/4"	10	31,5	16	17	-
021615	CX131038	10-8	G3/8"	11	33	16	17	40,8
021616	CX131238	12-10	G3/8"	11	34,5	19	21	-
021617	CX131212	12-10	G1/2"	11	35	19	24	-

Main features

Type	Description
CX14	Union. In AISI 316L Stainless Steel.



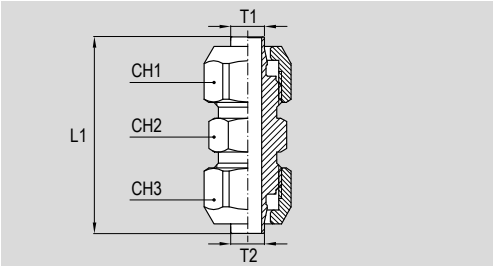

Dimensions

Code	Item	T1 (ØTube)	T2 (ØTube)	L1	CH1	CH2	CH3	Weight (g)
021566	CX140606	6-4	6-4	34	12	10	12	20
021567	CX140808	8-6	8-6	35	14	12	14	25,7
021618	CX140806	8-6	6-4	34,5	14	12	12	23,5
021568	CX141010	10-8	10-8	39	16	14	16	35,8
021619	CX141008	10-8	8-6	37	16	14	14	-
021620	CX141212	12-10	12-10	42	19	16	19	-
021621	CX141210	12-10	10-8	40,5	19	16	16	-

Main features

Type	Description
CX16	BSPT elbow. In AISI 316L Stainless Steel.



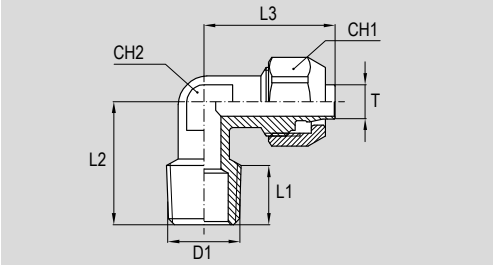

Dimensions

Code	Item	T (ØTube)	D1	L1	L2	L3	CH1	CH2	Weight (g)
021569	CX160618	6-4	R1/8”	6,5	17	23	12	10	16,6
021570	CX160614	6-4	R1/4”	10	21,5	23	12	10	20,5
021571	CX160818	8-6	R1/8”	6,5	17	23,5	14	10	17,6
021572	CX160814	8-6	R1/4”	10	21,5	23,5	14	10	21,1
021573	CX161014	10-8	R1/4”	9,5	21,5	26	16	12	29,5
021622	CX161038	10-8	R3/8”	11	24	26	16	12	-
021623	CX161238	12-10	R3/8”	12,6	35,5	30,5	19	17	-
021624	CX161212	12-10	R1/2”	13,5	30	33	19	19	-

Main features

Type	Description
CX15	BSPT swivel elbow. In AISI 316L Stainless Steel.



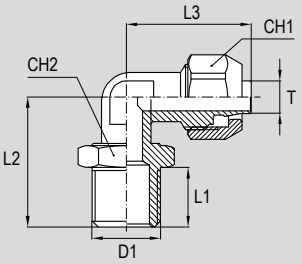

Dimensions

Code	Item	T (ØTube)	D1	L1	L2	L3	CH1	CH2	Weight (g)
021625	CX150618	6-4	R1/8”	7,5	20	21	12	13	-
021626	CX150614	6-4	R1/4”	11	24	21	12	14	-
021627	CX150818	8-6	R1/8”	7,5	20	21	14	13	-
021628	CX150814	8-6	R1/4”	11	24	21	14	14	-
021629	CX151014	10-8	R1/4”	11	25,5	24	16	14	-
021630	CX151038	10-8	R3/8”	11,5	26	24	16	17	-

Main features

Type	Description
CX18	Equal elbow. In AISI 316L Stainless Steel.



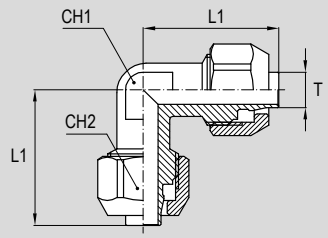

Dimensions

Code	Item	T (ØTube)	L1	CH1	CH2	Weight (g)
021574	CX180606	6-4	23	12	10	24,9
021575	CX180808	8-6	23,5	14	10	26,9
021576	CX181010	10-8	26	16	12	33,3
021631	CX181212	12-10	30	19	17	-

Main features

Type	Description
CX19	Equal tee. In AISI 316L Stainless Steel.



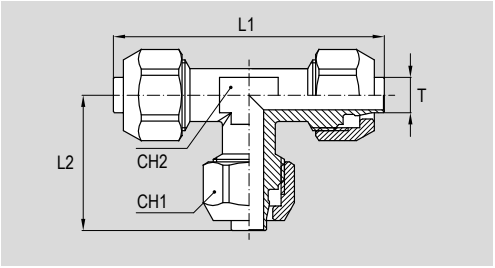

Dimensions

Code	Item	T (ØTube)	L1	L2	CH1	CH2	Weight (g)
021587	CX190606	6-4	46	23	12	10	36,4
021588	CX190808	8-6	46	23	14	10	39
021589	CX191010	10-8	52	26	16	12	47,6
021632	CX191212	12-10	60	30	19	17	-

Main features

Type	Description
CX20	BSPT tee. In AISI 316L Stainless Steel.



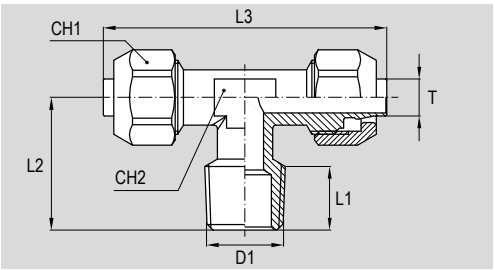

Dimensions

Code	Item	T (ØTube)	D1	L1	L2	L3	CH1	CH2	Weight (g)
021577	CX200618	6-4	R1/8”	6,5	17	46	12	10	29
021578	CX200614	6-4	R1/4”	9,5	21	46	12	10	31,6
021579	CX200818	8-6	R1/8”	6,5	17	46	14	10	30,3
021580	CX200814	8-6	R1/4”	10	21,5	46	14	10	33,7
021581	CX201014	10-8	R1/4”	9,5	21,5	52	16	12	39,7
021633	CX201038	10-8	R3/8”	11	24	52	16	12	-
021634	CX201238	12-10	R3/8”	12,6	60	52	19	17	-
021635	CX201212	12-10	R1/2”	13,9	60	52	19	17	-

Main features

Type	Description
CX21	BSPT side tee. In AISI 316L Stainless Steel.



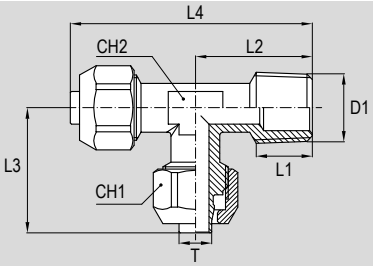

Dimensions

Code	Item	T (ØTube)	D1	L1	L2	L3	L4	CH1	CH2	Weight (g)
021582	CX210618	6-4	R1/8"	9,9	17	23	40	12	10	28,3
021583	CX210614	6-4	R1/4"	10	21,5	23	44,5	12	10	31,2
021584	CX210818	8-6	R1/8"	6,5	17	23	40	14	10	30,4
021585	CX210814	8-6	R1/4"	10	21,5	23	44,5	14	10	34,1
021586	CX211014	10-8	R1/4"	9,5	21,5	26	47,5	16	12	39,5
021636	CX211038	10-8	R3/8"	11	24	26	50	16	12	-
021637	CX211238	12-10	R3/8"	12,6	25,5	30	55,5	19	17	-
021638	CX211212	12-10	R1/2"	13,9	28	30	58	19	17	-

Main features

Type	Description
CX27	Nut. In AISI 316L Stainless Steel.



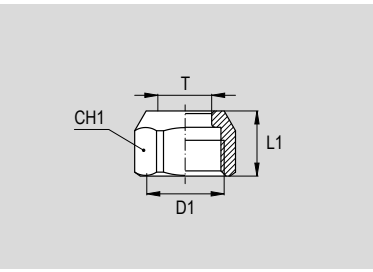

Dimensions

Code	Item	T (ØTube)	D1	L1	CH1	Weight (g)
021590	CX270610	6-4	M10x1	10	12	4,4
021591	CX270812	8-6	M12x1	10	14	5,5
021592	CX271014	10-8	M14x1	11	16	7
021639	CX271216	12-10	M16x1	12	19	-

Notes

STAINLESS STEEL
compression fittings



Find out our
key products

- **Solution for most applications**
- **Easy and intuitive choice**
- **Excellent value for money**
- **Wide availability**
- **Fast delivery**

Main features and certifications

Stainless Steel compression fittings. Available in different versions, threads and for different tube sizes.
Supplied conforming to Reach and RoHS directives. Lubricated with synthetic grease long lasting and fully composed by non-toxic elements conforming to FDA Directive section 21 CFR 178 about accidental contact with food (registered NSF H1).

Series OX

from page 5.306.10



Stainless Steel AISI 316 L compression fittings conforming to DIN 2353 standards for stainless steel tubes. The ogive crushing onto the tube, by screwing down the external nut, allows to get a safe connection even at high pressures. The ogive is single cone. Available in different configurations, with taper BSPT threads and BSP threads, in various sizes.

Stainless Steel compression fittings
Series OX






Code key

Series	Type*	Tube Diameter*	Thread (or Tube Diameter 2)*
OX	**11**	**08**	**18**
OX	11, 13, 14, 16, 17, 18, 19, 21, 22	04 = Ø 4 mm 06 = Ø 6 mm 08 = Ø 8 mm 10 = Ø 10 mm 12 = Ø 12 mm	18 = 1/8" 14 = 1/4" 38 = 3/8" 12 = 1/2"

How to order

Series	Type	Ø Tube	Thread
OX	**11**	**08**	**18**

Notes

*For matching between fitting type, tube diameter and thread, see from page 5.306.11; for the specific type, see the following pages.

For standard materials see the table below

Technical data

Version	Series OX
Fluid	Compressed air, aggressive fluids, low pressure oil
Maximum pressure	0 ÷ 80 bar
Temperature range	-40°C ÷ +250°C
Parallel threads	UNI - ISO 228 / 1 (BSP)
Taper threads	UNI EN 10226-1 (BSPT)
Tubes	Seamless Stainless Steel

Standard materials

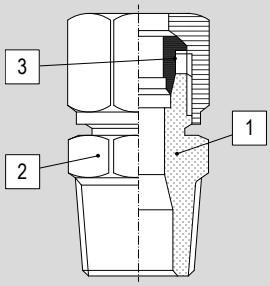

Position	Description	Material
1	Body	Stainless Steel AISI 316 L
2	Nut	Stainless Steel AISI 316 L
3	Ogive	Stainless Steel AISI 316 L

Fittings series OX

Type			Taper threads (BSPT)	Parallel threads (BSP)	For tube Ø mm	Data sheet and code page
OX11	BSPT stud		1/8", 1/4", 3/8", 1/2"	-	4, 6, 8, 10, 12	5.306.12
OX13	Female BSP stud		-	1/8", 1/4", 3/8", 1/2"	6, 8, 10, 12	5.306.12
OX14	Union		-	-	4, 6, 8, 10, 12	5.306.13
OX16	BSPT elbow		1/8", 1/4", 3/8", 1/2"	-	4, 6, 8, 10, 12	5.306.13
OX17	Equal elbow		-	-	4, 6, 8, 10, 12	5.306.14
OX18	Equal tee		-	-	4, 6, 8, 10, 12	5.306.14
OX19	BSPT tee		1/8", 1/4", 3/8", 1/2"	-	4, 6, 8, 10, 12	5.306.15
OX21	Nut		-	-	4, 6, 8, 10, 12	5.306.15
OX22	Ogive		-	-	4, 6, 8, 10, 12	5.306.16

Matching thread/tube

Tube diameter (external)	Thread							
	G1/8"	G1/4"	G3/8"	G1/2"	R1/8"	R1/4"	R3/8"	R1/2"
Ø 4 mm	-	-	-	-	●	-	-	-
Ø 6 mm	●	-	-	-	●	●	-	-
Ø 8 mm	-	●	-	-	●	●	-	-
Ø 10 mm	-	●	●	-	-	●	●	-
Ø 12 mm	-	-	●	●	-	-	●	●

Key
● available matching; – not available matching

Stainless Steel compression fittings
Series OX

Main features

Type	Description
OX11	BSPT stud. In AISI 316L Stainless Steel



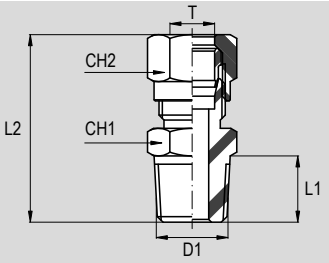

Dimensions

Code	Item	T (ØTube)	D1	L1	L2	CH1	CH2	Weight (g)
027057	OX110418	4	R1/8"	8	27	10	10	12,9
027031	OX110618	6	R1/8"	8	27	11	12	14,9
027032	OX110614	6	R1/4"	11	31	14	12	24
027053	OX110818	8	R1/8"	8	29	12	14	17,5
027033	OX110814	8	R1/4"	11	32	14	14	25
027036	OX111014	10	R1/4"	11	35,5	17	19	42,4
027037	OX111038	10	R3/8"	11,5	37	17	19	51,2
027040	OX111238	12	R3/8"	11,5	37	19	22	59,3
027041	OX111212	12	R1/2"	14	40,5	22	22	81,1

Main features

Type	Description
OX13	Female BSP stud. In AISI 316L Stainless Steel



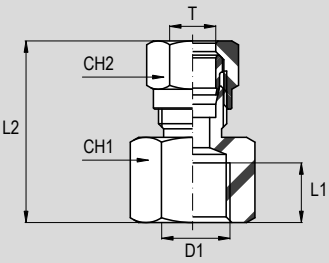

Dimensions

Code	Item	T (ØTube)	D1	L1	L2	CH1	CH2	Weight (g)
027081	OX130618	6	G1/8"	8,5	28	14	12	20,5
027082	OX130814	8	G1/4"	10,5	31	19	14	35,1
027083	OX131014	10	G1/4"	10,5	34,5	19	19	51,6
027016	OX131038	10	G3/8"	10,5	36,5	22	19	-
027084	OX131238	12	G3/8"	10,5	36,5	22	22	70,2
027017	OX131212	12	G1/2"	12,5	37,5	24	22	69,2

Main features

Type	Description
OX14	Union. In AISI 316L Stainless Steel



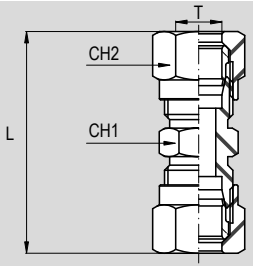

Dimensions

Code	Item	T (ØTube)	L	CH1	CH2	Weight (g)
027021	OX140404	4	34	9	10	14,9
027001	OX140606	6	34	11	12	20,4
027002	OX140808	8	36	12	14	26,5
027003	OX141010	10	45	17	19	66,4
027004	OX141212	12	45	19	22	85,8

Main features

Type	Description
OX16	BSPT elbow. In AISI 316L Stainless Steel



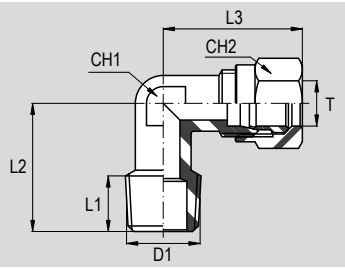

Dimensions

Code	Item	T (ØTube)	D1	L1	L2	L3	CH1	CH2	Weight (g)
027018	OX160418	4	R1/8”	6,5	17	23	10	10	16,7
027091	OX160618	6	R1/8”	6,5	17	24	10	12	19,2
027092	OX160614	6	R1/4”	10	21,5	24	10	12	21,9
027094	OX160814	8	R1/4”	10	21,5	24,5	10	14	23,1
027096	OX161014	10	R1/4”	12,5	24,5	30,5	12	19	46,8
027097	OX161038	10	R3/8”	11,5	24,5	30,5	12	19	49,8
027100	OX161238	12	R3/8”	12,5	25,5	33	17	22	72,5
027101	OX161212	12	R1/2”	13,5	30	35	19	22	91,2

Main features

Type	Description
OX17	Equal elbow. In AISI 316L Stainless Steel



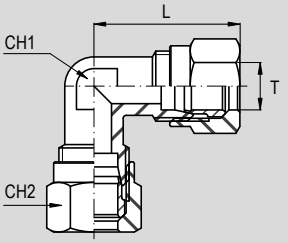

Dimensions

Code	Item	T (ØTube)	L	CH1	CH2	Weight (g)
027022	OX170404	4	23	10	10	21,5
027061	OX170606	6	24	10	12	25,3
027062	OX170808	8	24,5	10	14	28,3
027063	OX171010	10	30,5	12	19	66
027064	OX171212	12	33	17	22	99,2

Main features

Type	Description
OX18	Equal tee. In AISI 316L Stainless Steel



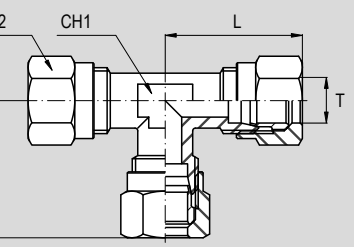

Dimensions

Code	Item	T (ØTube)	L	CH1	CH2	Weight (g)
027023	OX180404	4	23	10	10	30,2
027121	OX180606	6	24	10	12	36,2
027122	OX180808	8	24,5	10	14	40,9
027123	OX181010	10	30,5	12	19	94,1
027124	OX181212	12	33	17	22	143

Main features

Type	Description
OX19	BSPT tee. In AISI 316L Stainless Steel



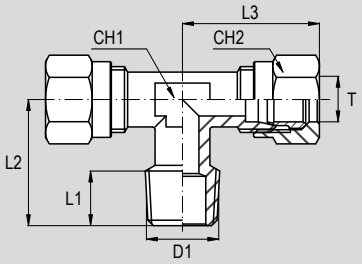

Dimensions

Code	Item	T (ØTube)	D1	L1	L2	L3	CH1	CH2	Weight (g)
027019	OX190418	4	R1/8"	6,5	17	23	10	10	25,3
027151	OX190618	6	R1/8"	6,5	17	24	10	12	29,6
027152	OX190614	6	R1/4"	10	21,5	24	10	12	32,7
027153	OX190814	8	R1/4"	10	21,5	24,5	10	14	35,1
020243	OX191014	10	R1/4"	12,5	24,5	30,5	12	19	72,6
027154	OX191038	10	R3/8"	11,5	24,5	30,5	12	19	76,9
027156	OX191238	12	R3/8"	12,5	25,5	33	17	22	117,1
027020	OX191212	12	R1/2"	13,5	30	33	19	22	126,2

Main features

Type	Description
OX21	Nut. In AISI 316L Stainless Steel



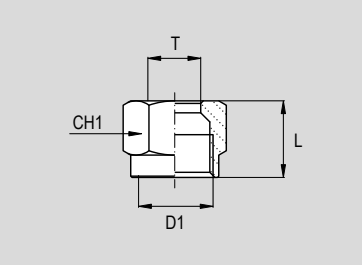

Dimensions

Code	Item	T (ØTube)	D1	L	CH1	Weight (g)
027240	OX210404	4	M8x1	11	10	4,3
027241	OX210606	6	M10x1	11,5	12	5,6
027242	OX210808	8	M12x1	12	14	7,1
027243	OX211010	10	M16x1,5	15,5	19	18,4
027244	OX211212	12	M18x1,5	15,5	22	25,8

Stainless Steel compression fittings
Series OX

Main features

Type	Description
OX22	Ogive. In AISI 316L Stainless Steel



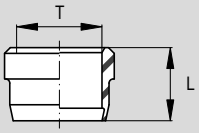

Dimensions

Code	Item	T (ØTube)	L	Weight (g)
027024	OX220404	4	5,5	0,3
027271	OX220606	6	6	0,8
027272	OX220808	8	5,7	1
027273	OX221010	10	8	2,2
027274	OX221212	12	8	2,5

Notes

STAINLESS STEEL
standard fittings



Find out our
key products

- **Solution for most applications**
- **Easy and intuitive choice**
- **Excellent value for money**
- **Wide availability**
- **Fast delivery**

Main features and certifications

Stainless Steel standard fittings. Available in different configurations and threads.
Supplied conforming to Reach and RoHS directives.

Series AX

from page 5.308.10



Stainless Steel AISI 316 standard fittings. Available in different configurations, with taper BSPT threads and BSP threads, in various sizes, from 1/8" up to 4".

Stainless Steel standard fittings
Series AX






Code key

Series	Type*	Thread 1*	Thread 2*
AX	**002**	**12**	**14**

Series	Type*	Thread 1*	Thread 2*
AX	002, 004, 006, 007, 010, 013, 015, 016, 021, 022, 023, 026, 027, 028, 029, 030, 031, 032, 033, 034	18 = 1/8" 14 = 1/4" 38 = 3/8" 12 = 1/2" 34 = 3/4" 01 = 1"	41 = 1 1/4" 21 = 1 1/2" 02 = 2" 22 = 2 1/2" 03 = 3" 04 = 4"

How to order

Series	Type	Ø Tube	Thread
AX	**002**	**12**	**14**

Notes

*For matching between fitting type and thread, see from page 5.308.11; for the specific type, see the following pages.

For standard materials see the table below

Technical data

Version	Series AX
Fluid	Compressed air, aggressive fluids, low pressure oil
Maximum pressure	0 ÷ 60 bar
Temperature range	-40°C ÷ +250°C
Taper threads	UNI EN 10226-1 (BSPT)

Standard materials

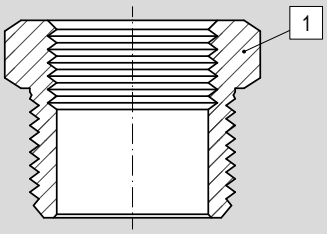

Position	Description	Material
1	Body	Stainless Steel AISI 316

Fittings series AX

Type			Taper threads (BSPT)	Parallel threads (BSP)	Stem Ø mm	Data sheet and code page
AX002	M/F reducer		1/4", 3/8", 1/2", 3/4", 1", 1-1/4", 1-1/2", 2", 2-1/2", 3"	1/8", 1/4", 3/8", 1/2", 3/4", 1", 1-1/4", 1-1/2", 2", 2 1/2", 3"	-	5.308.12
AX004	M/F increaser		1/8", 1/4", 3/8", 1/2", 3/4", 1", 1-1/4", 1-1/2"	1/8", 1/4", 3/8", 1/2", 3/4", 1", 1-1/4", 1-1/2"	-	5.308.13
AX006	BSPT nipple		1/8", 1/4", 3/8", 1/2", 3/4", 1", 1-1/4", 1-1/2", 2", 2-1/2", 3"	-	-	5.308.12
AX027	BSPT reducing nipple		1/8", 1/4", 3/8", 1/2", 3/4", 1", 1-1/4", 1-1/2", 2", 2-1/2", 3"	-	-	5.308.14
AX028	Threaded nipple		1/8", 1/4", 3/8", 1/2", 3/4", 1", 1-1/4", 1-1/2", 2", 2-1/2", 3"	-	-	5.308.14
AX029	Solder fitting		1/8", 1/4", 3/8", 1/2", 3/4", 1", 1-1/4", 1-1/2", 2", 2-1/2", 3", 4"	-	-	5.308.15
AX030	BSPT extended nipple		1/8", 1/4", 3/8", 1/2", 3/4", 1", 1-1/4", 1-1/2", 2", 2-1/2", 3"	-	-	5.308.15
AX007	Female socket		-	1/8", 1/4", 3/8", 1/2", 3/4", 1", 1-1/4", 1-1/2", 2", 2-1/2", 3", 4"	-	5.308.16
AX031	Female reducing socket		-	1/8", 1/4", 3/8", 1/2", 3/4", 1", 1-1/4", 1-1/2", 2", 2-1/2", 3"	-	5.308.16
AX016	Male BSPT plug		1/8", 1/4", 3/8", 1/2", 3/4", 1", 1-1/4", 1-1/2", 2", 2-1/2", 3"	-	-	5.308.17
AX010	Female plug		-	1/8", 1/4", 3/8", 1/2", 3/4", 1", 1-1/4", 1-1/2", 2", 2-1/2", 3"	-	5.308.17
AX013	Nut		-	1/8", 1/4", 3/8", 1/2", 3/4", 1", 1-1/4", 1-1/2", 2", 2-1/2", 3"	-	5.308.18
AX015	BSPT hose adapter		1/8", 1/4", 3/8", 1/2", 3/4", 1", 1-1/4", 1-1/2", 2"	-	7, 8, 10, 14,5, 20, 25, 32, 40, 52	5.308.18
AX032	BSP F/F union		-	1/8", 1/4", 3/8", 1/2", 3/4", 1", 1-1/4", 1-1/2", 2", 2-1/2", 3"	-	5.308.19
AX033	M/F union		1/8", 1/4", 3/8", 1/2", 3/4", 1", 1-1/4", 1-1/2", 2"	1/8", 1/4", 3/8", 1/2", 3/4", 1", 1-1/4", 1-1/2", 2"	-	5.308.19
AX034	BSP 45° F/F elbow		-	1/8", 1/4", 3/8", 1/2", 3/4", 1", 1-1/4", 1-1/2", 2", 2-1/2", 3"	-	5.308.20
AX021	F/F elbow		-	1/8", 1/4", 3/8", 1/2", 3/4", 1", 1-1/4", 1-1/2", 2", 2-1/2", 3"	-	5.308.20
AX022	M/F elbow		1/8", 1/4", 3/8", 1/2", 3/4", 1", 1-1/4", 1-1/2", 2", 2-1/2", 3"	1/8", 1/4", 3/8", 1/2", 3/4", 1", 1-1/4", 1-1/2", 2", 2-1/2", 3"	-	5.308.21
AX023	F/F/F tee		-	1/8", 1/4", 3/8", 1/2", 3/4", 1", 1-1/4", 1-1/2", 2", 2-1/2", 3"	-	5.308.21
AX026	F/F/F/F +		-	1/8", 1/4", 3/8", 1/2", 3/4", 1", 1-1/4", 1-1/2", 2"	-	5.308.22

Main features

Type	Description
AX002	M/F reducer. In AISI 316 Stainless Steel.



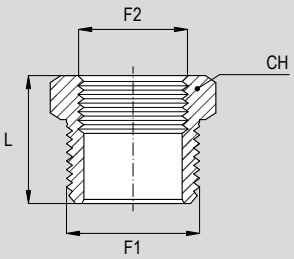

Dimensions

Code	Item	F1 (Thread 1)	F2 (Thread 2)	L	CH	Weight (g)
026161	AX002 14 18	R1/4"	G1/8"	18	14	-
026163	AX002 38 18	R3/8"	G1/8"	20	17	-
026162	AX002 38 14	R3/8"	G1/4"	20	17	-
026165	AX002 12 38	R1/2"	G3/8"	23	22	-
026164	AX002 12 14	R1/2"	G1/4"	23	22	-
026166	AX002 34 38	R3/4"	G3/8"	27	27	-
026167	AX002 34 12	R3/4"	G1/2"	27	27	-
026168	AX002 01 12	R1"	G1/2"	30	36	-
026169	AX002 01 34	R1"	G3/4"	30	36	-
026170	AX002 41 34	R1 1/4"	G3/4"	31	42	-
026171	AX002 41 01	R1 1/4"	G1"	31	42	-
026172	AX002 21 01	R1 1/2"	G1"	33	50	-
026173	AX002 21 41	R1 1/2"	G1 1/4"	33	50	-
026174	AX002 02 41	R2"	G1 1/4"	37	60	-
026175	AX002 02 21	R2"	G1 1/2"	37	60	-
026176	AX002 22 21	R2 1/2"	G1 1/2"	43	77	-
026177	AX002 22 02	R2 1/2"	G2"	43	77	-
026178	AX002 03 02	R3"	G2"	48	90	-
026179	AX002 03 22	R3"	G2 1/2"	48	90	-

Main features

Type	Description
AX006	BSPT nipple. In AISI 316 Stainless Steel.



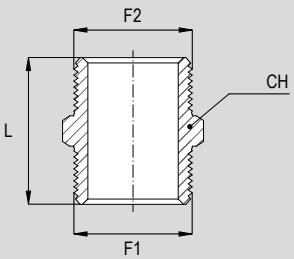

Dimensions

Code	Item	F1 (Thread 1)	F2 (Thread 2)	L	CH	Weight (g)
026131	AX006 18 18	R1/8"	R1/8"	24	12	-
026132	AX006 14 14	R1/4"	R1/4"	29	14	-
026133	AX006 38 38	R3/8"	R3/8"	32	17	-
026134	AX006 12 12	R1/2"	R1/2"	38	22	-
026135	AX006 34 34	R3/4"	R3/4"	45	27	-
026136	AX006 01 01	R1"	R1"	47	36	-
026137	AX006 41 41	R1 1/4"	R1 1/4"	52	42	-
026138	AX006 21 21	R1 1/2"	R1 1/2"	55	50	-
026139	AX006 02 02	R2"	R2"	62	60	-
026140	AX006 22 22	R2 1/2"	R2 1/2"	71	77	-
026141	AX006 03 03	R3"	R3"	82	90	-

Main features

Type	Description
AX004	M/F increaser. In AISI 316 Stainless Steel.



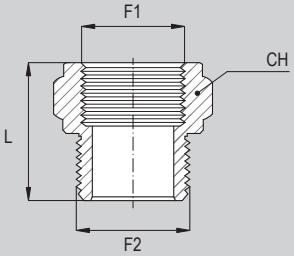

Dimensions

Code	Item	F1 (Thread 1)	F2 (Thread 2)	L	CH	Weight (g)
026251	AX004 18 18	G1/8”	R1/8”	21	17	-
026252	AX004 14 18	G1/4”	R1/8”	24	19	-
026253	AX004 14 14	G1/4”	R1/4”	27	19	-
026254	AX004 38 18	G3/8”	R1/8”	25	24	-
026255	AX004 38 14	G3/8”	R1/4”	28	24	-
026256	AX004 38 38	G3/8”	R3/8”	31	24	-
026257	AX004 12 14	G1/2”	R1/4”	30	30	-
026258	AX004 12 38	G1/2”	R3/8”	33	30	-
026259	AX004 12 12	G1/2”	R1/2”	40	24	-
026260	AX004 34 14	G3/4”	R1/4”	31	36	-
026261	AX004 34 38	G3/4”	R3/8”	34	36	-
026262	AX004 34 12	G3/4”	R1/2”	35	36	-
026263	AX004 34 34	G3/4”	R3/4”	37	36	-
026264	AX004 01 38	G1”	R3/8”	37	41	-
026265	AX004 01 12	G1”	R1/2”	38	41	-
026266	AX004 01 34	G1”	R3/4”	40	41	-
026267	AX004 01 01	G1”	R1”	41	41	-
026268	AX004 41 34	G1 1/4”	R3/4”	40	50	-
026269	AX004 41 01	G1 1/4”	R1”	41	50	-
026270	AX004 41 41	G1 1/4”	R1 1/4”	44	50	-
026271	AX004 21 34	G1 1/2”	R3/4”	43	55	-
026272	AX004 21 01	G1 1/2”	R1”	44	55	-
026273	AX004 21 41	G1 1/2”	R1 1/4”	47	55	-
026274	AX004 21 41	G1 1/2”	R1 1/2”	53	55	-

Main features

Type	Description
AX027	BSPT reducing nipple. In AISI 316 Stainless Steel.



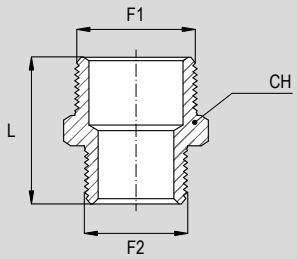

Dimensions

Code	Item	F1 (Thread 1)	F2 (Thread 2)	L	CH	Weight (g)
026091	AX027 14 18	R1/4”	R1/8”	27	14	-
026092	AX027 38 14	R3/8”	R1/4”	31	17	-
026093	AX027 12 14	R1/2”	R1/4”	34	22	-
026094	AX027 12 38	R1/2”	R3/8”	35	22	-
026095	AX027 34 38	R3/4”	R3/8”	38	27	-
026096	AX027 34 12	R3/4”	R1/2”	42	27	-
026097	AX027 01 12	R1”	R1/2”	45	36	-
026098	AX027 01 34	R1”	R3/4”	48	36	-
026099	AX027 41 34	R1 1/4”	R3/4”	49	42	-
026100	AX027 41 01	R1 1/4”	R1”	51	42	-
026101	AX027 21 01	R1 1/2”	R1”	53	50	-
026102	AX027 21 41	R1 1/2”	R1 1/4”	54	50	-
026103	AX027 02 41	R2”	R1 1/4”	58	60	-
026104	AX027 02 21	R2”	R1 1/2”	59	60	-
026105	AX027 22 21	R2 1/2”	R1 1/2”	67	77	-
026106	AX027 22 02	R2 1/2”	R2”	70	77	-
026107	AX027 03 22	R3”	R2 1/2”	78	90	-

Main features

Type	Description
AX028	Threaded nipple. In AISI 316 Stainless Steel.



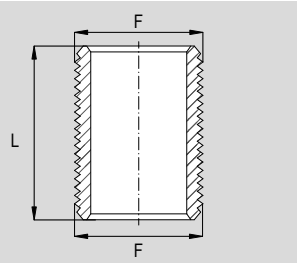

Dimensions

Code	Item	F (Thread)	L	Weight (g)
026001	AX028 18 18	R1/8”	16	-
026002	AX028 14 14	R1/4”	18	-
026003	AX028 38 38	R3/8”	22	-
026004	AX028 12 12	R1/2”	25	-
026005	AX028 34 34	R3/4”	30	-
026006	AX028 01 01	R1”	35	-
026007	AX028 41 41	R1 1/4”	38	-
026008	AX028 21 21	R1 1/2”	38	-
026009	AX028 02 02	R2”	45	-
026010	AX028 22 22	R2 1/2”	55	-
026011	AX028 03 03	R3”	60	-

Main features

Type	Description
AX029	Solder fitting. In AISI 316 Stainless Steel.



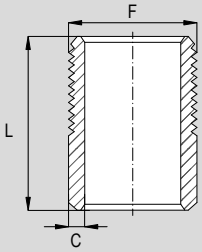

Dimensions

Code	Item	F (Thread)	L	C	Weight (g)
026031	AX029 18 18	R1/8”	20	2,24	-
026032	AX029 14 14	R1/4”	22	2,24	-
026033	AX029 38 38	R3/8”	25	2,31	-
026034	AX029 12 12	R1/2”	28	2,90	-
026035	AX029 34 34	R3/4”	35	2,90	-
026036	AX029 01 01	R1”	35	3,38	-
026037	AX029 41 41	R1 1/4”	45	3,56	-
026038	AX029 21 21	R1 1/2”	45	3,68	-
026039	AX029 02 02	R2”	50	3,91	-
026040	AX029 22 22	R2 1/2”	55	6,30	-
026041	AX029 03 03	R3”	65	4	-
026042	AX029 04 04	R4”	75	4,5	-

Main features

Type	Description
AX030	BSPT extended nipple. In AISI 316 Stainless Steel.



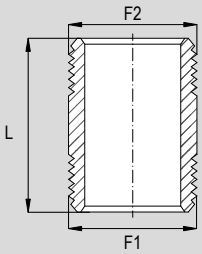

Dimensions

Code	Item	F1 (Thread 1)	F2 (Thread 2)	L	Weight (g)
026061	AX030 18 18	R1/8”	R1/8”	30	-
026062	AX030 14 14	R1/4”	R1/4”	36	-
026063	AX030 38 38	R3/8”	R3/8”	42	-
026064	AX030 12 12	R1/2”	R1/2”	45	-
026065	AX030 34 34	R3/4”	R3/4”	53	-
026066	AX030 01 01	R1”	R1”	60	-
026067	AX030 41 41	R1 1/4”	R1 1/4”	66	-
026068	AX030 21 21	R1 1/2”	R1 1/2”	67	-
026069	AX030 02 02	R2”	R2”	75	-
026070	AX030 22 22	R2 1/2”	R2 1/2”	85	-
026071	AX030 03 03	R3”	R3”	90	-

Main features

Type	Description
AX007	Female socket. In AISI 316 Stainless Steel.



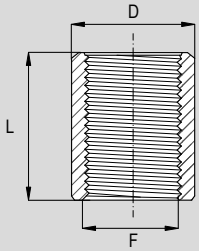

Dimensions

Code	Item	F (Thread)	L	D	Weight (g)
026511	AX007 18 18	G1/8”	20	14	-
026512	AX007 14 14	G1/4”	22	17,2	-
026513	AX007 38 38	G3/8”	25	21,3	-
026514	AX007 12 12	G1/2”	30	26,7	-
026515	AX007 34 34	G3/4”	35	33,4	-
026516	AX007 01 01	G1”	37	40	-
026517	AX007 41 41	G1 1/4”	42	48,3	-
026518	AX007 21 21	G1 1/2”	42	57	-
026519	AX007 02 02	G2”	46	71	-
026520	AX007 22 22	G2 1/2”	65	90	-
026521	AX007 03 03	G3”	70	100	-
026522	AX007 04 04	G4”	70	120	-

Main features

Type	Description
AX031	Female reducing socket. In AISI 316 Stainless Steel.



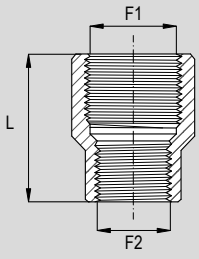

Dimensions

Code	Item	F1 (Thread 1)	F2 (Thread 2)	L	Weight (g)
026541	AX031 14 18	G1/4”	G1/8”	27	-
026542	AX031 38 14	G3/8”	G1/4”	30	-
026543	AX031 12 14	G1/2”	G1/4”	36	-
026544	AX031 12 38	G1/2”	G3/8”	36	-
026545	AX031 34 38	G3/4”	G3/8”	39	-
026546	AX031 34 12	G3/4”	G1/2”	39	-
026547	AX031 01 12	G1”	G1/2”	45	-
026548	AX031 01 34	G1”	G3/4”	45	-
026549	AX031 41 34	G1 1/4”	G3/4”	50	-
026550	AX031 41 01	G1 1/4”	G1”	50	-
026551	AX031 21 01	G1 1/2”	G1”	55	-
026552	AX031 21 41	G1 1/2”	G1 1/4”	55	-
026553	AX031 02 41	G2”	G1 1/4”	65	-
026554	AX031 02 21	G2”	G1 1/2”	65	-
026555	AX031 22 21	G2 1/2”	G1 1/2”	74	-
026556	AX031 22 02	G2 1/2”	G2”	74	-
026557	AX031 03 02	G3”	G2”	80	-
026558	AX031 03 22	G3”	G2 1/2”	80	-

Main features

Type	Description
AX016	Male BSPT plug. In AISI 316 Stainless Steel.



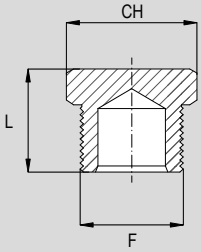

Dimensions

Code	Item	F (Thread)	L	CH	Weight (g)
026191	AX016 18 18	R1/8"	15	12	-
026192	AX016 14 14	R1/4"	17	14	-
026193	AX016 38 38	R3/8"	18	17	-
026194	AX016 12 12	R1/2"	20	22	-
026195	AX016 34 34	R3/4"	25	27	-
026196	AX016 01 01	R1"	28	36	-
026197	AX016 41 41	R1 1/4"	31	42	-
026198	AX016 21 21	R1 1/2"	33	50	-
026199	AX016 02 02	R2"	38	60	-
026200	AX016 22 22	R2 1/2"	43	77	-
026201	AX016 03 03	R3"	48	90	-

Main features

Type	Description
AX010	Female plug. In AISI 316 Stainless Steel.



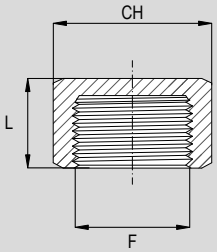

Dimensions

Code	Item	F (Thread)	L	CH	Weight (g)
026671	AX010 18 18	G1/8"	13	17	-
026672	AX010 14 14	G1/4"	15	19	-
026673	AX010 38 38	G3/8"	16	24	-
026674	AX010 12 12	G1/2"	18	30	-
026675	AX010 34 34	G3/4"	21	36	-
026676	AX010 01 01	G1"	24	41	-
026677	AX010 41 41	G1 1/4"	24	50	-
026678	AX010 21 21	G1 1/2"	24	55	-
026679	AX010 02 02	G2"	26	68	-
026680	AX010 22 22	G2 1/2"	30	84	-
026681	AX010 03 03	G3"	30	98	-

Main features

Type	Description
AX013	Nut. In AISI 316 Stainless Steel.



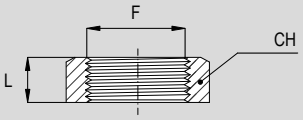

Dimensions

Code	Item	F (Thread)	L	CH	Weight (g)
026641	AX013 18 18	G1/8"	6	19	-
026642	AX013 14 14	G1/4"	6	22	-
026643	AX013 38 38	G3/8"	7	27	-
026644	AX013 12 12	G1/2"	8	32	-
026645	AX013 34 34	G3/4"	9	36	-
026646	AX013 01 01	G1"	10	46	-
026647	AX013 41 41	G1 1/4"	11	55	-
026648	AX013 21 21	G1 1/2"	12	60	-
026649	AX013 02 02	G2"	13	75	-
026650	AX013 22 22	G2 1/2"	16	95	-
026651	AX013 03 03	G3"	19	105	-

Main features

Type	Description
AX015	BSPT hose adapter. In AISI 316 Stainless Steel.



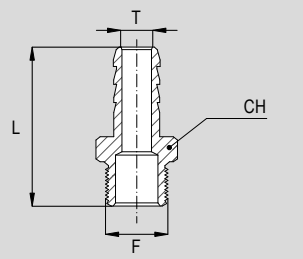

Dimensions

Code	Item	T (ØTube)	F (Thread)	L	CH	Weight (g)
026711	AX015 07 18	7	R1/8"	30	13	-
026712	AX015 09 14	8	R1/4"	44	15	-
026713	AX015 11 38	10	R3/8"	50	19	-
026714	AX015 15 12	14,5	R1/2"	52	24	-
026715	AX015 21 34	20	R3/4"	60	28	-
026716	AX015 27 01	25	R1"	70	35	-
026717	AX015 34 41	32	R1 1/4"	70	45	-
026718	AX015 40 21	40	R1 1/2"	80	50	-
026719	AX015 52 02	52	R2"	88	62	-

Main features

Type	Description
AX032	BSP F/F union. In AISI 316 Stainless Steel.



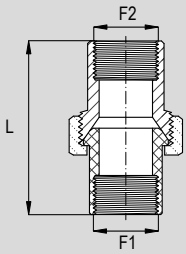

Dimensions

Code	Item	F1 (Thread 1)	F2 (Thread 2)	L	Weight (g)
026741	AX032 18 18	G1/8”	G1/8”	30	-
026742	AX032 14 14	G1/4”	G1/4”	34	-
026743	AX032 38 38	G3/8”	G3/8”	38	-
026744	AX032 12 12	G1/2”	G1/2”	41	-
026745	AX032 34 34	G3/4”	G3/4”	48	-
026746	AX032 01 01	G1”	G1”	52	-
026747	AX032 41 41	G1 1/4”	G1 1/4”	54	-
026748	AX032 21 21	G1 1/2”	G1 1/2”	59	-
026749	AX032 02 02	G2”	G2”	67	-
026750	AX032 22 22	G2 1/2”	G2 1/2”	78	-
026751	AX032 03 03	G3”	G3”	94	-

Main features

Type	Description
AX033	M/F union. In AISI 316 Stainless Steel.



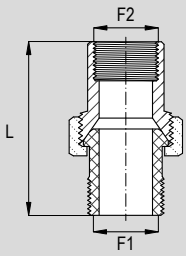

Dimensions

Code	Item	F1 (Thread 1)	F2 (Thread 2)	CH	Weight (g)
026801	AX033 18 18	R1/8”	G1/8”	42	-
026802	AX033 14 14	R1/4”	G1/4”	42	-
026803	AX033 38 38	R3/8”	G3/8”	49	-
026804	AX033 12 12	R1/2”	G1/2”	56	-
026805	AX033 34 34	R3/4”	G3/4”	63	-
026806	AX033 01 01	R1”	G1”	69	-
026807	AX033 41 41	R1 1/4”	G1 1/4”	74	-
026808	AX033 21 21	R1 1/2”	G1 1/2”	84	-
026809	AX033 02 02	R2”	G2”	102	-

Main features

Type	Description
AX034	BSP 45° F/F elbow. In AISI 316 Stainless Steel.



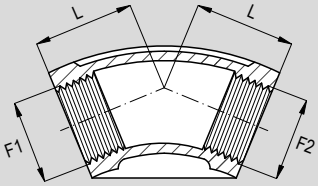

Dimensions

Code	Item	F1 (Thread 1)	F2 (Thread 2)	L	Weight (g)
026311	AX034 18 18	G1/8"	G1/8"	17	-
026312	AX034 14 14	G1/4"	G1/4"	19	-
026313	AX034 38 38	G3/8"	G3/8"	20	-
026314	AX034 12 12	G1/2"	G1/2"	22	-
026315	AX034 34 34	G3/4"	G3/4"	25	-
026316	AX034 01 01	G1"	G1"	28	-
026317	AX034 41 41	G1 1/4"	G1 1/4"	33	-
026318	AX034 21 21	G1 1/2"	G1 1/2"	36	-
026319	AX034 02 02	G2"	G2"	43	-
026320	AX034 22 22	G2 1/2"	G2 1/2"	50	-
026321	AX034 03 03	G3"	G3"	56	-

Main features

Type	Description
AX021	F/F elbow. In AISI 316 Stainless Steel.



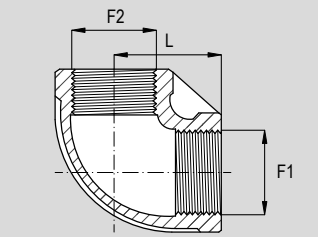

Dimensions

Code	Item	F1 (Thread 1)	F2 (Thread 2)	L	Weight (g)
026291	AX021 18 18	G1/8"	G1/8"	19	-
026292	AX021 14 14	G1/4"	G1/4"	21	-
026293	AX021 38 38	G3/8"	G3/8"	25	-
026294	AX021 12 12	G1/2"	G1/2"	28	-
026295	AX021 34 34	G3/4"	G3/4"	33	-
026296	AX021 01 01	G1"	G1"	38	-
026297	AX021 41 41	G1 1/4"	G1 1/4"	45	-
026298	AX021 21 21	G1 1/2"	G1 1/2"	50	-
026299	AX021 02 02	G2"	G2"	58	-
026300	AX021 22 22	G2 1/2"	G2 1/2"	75	-
026301	AX021 03 03	G3"	G3"	85	-

Main features

Type	Description
AX022	M/F elbow. In AISI 316 Stainless Steel.



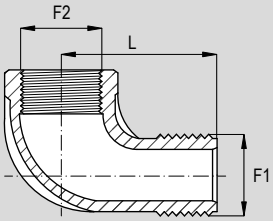

Dimensions

Code	Item	F1 (Thread 1)	F2 (Thread 2)	L	Weight (g)
026391	AX022 18 18	R1/8”	G1/8”	20	-
026392	AX022 14 14	R1/4”	G1/4”	20	-
026393	AX022 38 38	R3/8”	G3/8”	24	-
026394	AX022 12 12	R1/2”	G1/2”	28	-
026395	AX022 34 34	R3/4”	G3/4”	33	-
026396	AX022 01 01	R1”	G1”	38	-
026397	AX022 41 41	R1 1/4”	G1 1/4”	-	-
026398	AX022 21 21	R1 1/2”	G1 1/2”	-	-
026399	AX022 02 02	R2”	G2”	-	-
026400	AX022 22 22	R2 1/2”	G2 1/2”	-	-
026401	AX022 03 03	R3”	G3”	-	-

Main features

Type	Description
AX023	F/F/F tee. In AISI 316 Stainless Steel.



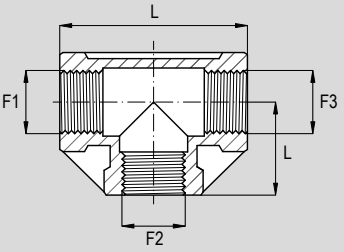

Dimensions

Code	Item	F1 (Thread 1)	F2 (Thread 2)	F3 (Thread 3)	L	Weight (g)
026421	AX023 18 18	G1/8”	G1/8”	G1/8”	19	-
026422	AX023 14 14	G1/4”	G1/4”	G1/4”	21	-
026423	AX023 38 38	G3/8”	G3/8”	G3/8”	25	-
026424	AX023 12 12	G1/2”	G1/2”	G1/2”	28	-
026425	AX023 34 34	G3/4”	G3/4”	G3/4”	33	-
026426	AX023 01 01	G1”	G1”	G1”	38	-
026427	AX023 41 41	G1 1/4”	G1 1/4”	G1 1/4”	45	-
026428	AX023 21 21	G1 1/2”	G1 1/2”	G1 1/2”	50	-
026429	AX023 02 02	G2”	G2”	G2”	58	-
026430	AX023 22 22	G2 1/2”	G2 1/2”	G2 1/2”	75	-
026431	AX023 03 03	G3”	G3”	G3”	85	-

Stainless Steel standard fittings
Series AX

Main features

Type	Description
AX026	F/F/F/F +. In AISI 316 Stainless Steel.



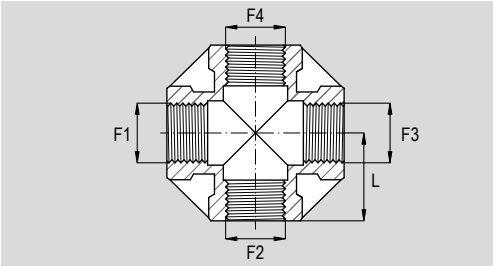

Dimensions

Code	Item	F1 (Thread 1)	F2 (Thread 2)	F2 (Thread 3)	F2 (Thread 4)	L	Weight (g)
026481	AX026 18 18	G1/8”	G1/8”	G1/8”	G1/8”	20	-
026482	AX026 14 14	G1/4”	G1/4”	G1/4”	G1/4”	24	-
026483	AX026 38 38	G3/8”	G3/8”	G3/8”	G3/8”	24	-
026484	AX026 12 12	G1/2”	G1/2”	G1/2”	G1/2”	28	-
026485	AX026 34 34	G3/4”	G3/4”	G3/4”	G3/4”	33	-
026486	AX026 01 01	G1”	G1”	G1”	G1”	38	-
026487	AX026 41 41	G1 1/4”	G1 1/4”	G1 1/4”	G1 1/4”	45	-
026488	AX026 21 21	G1 1/2”	G1 1/2”	G1 1/2”	G1 1/2”	49	-
026489	AX026 02 02	G2”	G2”	G2”	G2”	57	-

Notes

STAINLESS STEEL
quick-lock couplings



Find out our
key products

- **Solution for most applications**
- **Easy and intuitive choice**
- **Excellent value for money**
- **Wide availability**
- **Fast delivery**

Main features and certifications

Stainless Steel quick-lock couplings. Available in versions double shut off conforming to ISO ISO 7241-1 “A” standards, double shut off flat face conforming to ISO 16028 standards, in-line and 90° rotary joints, with different threads.
Supplied conforming to Reach and RoHS directives.

Series GXA

from page 5.321.1



Series of stainless steel double shut off quick-lock couplings conforming to ISO 7241-1 “A” standards. Suitable for use in aggressive environments. The tightness of the coupling connection with the plug is ensured by a series of spheres that allow a longer lifetime, even when connections and disconnections are frequent. Available in sizes from 1/4" to 1".

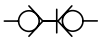

Series GXF

from page 5.322.1



Series of stainless steel double shut off flat face quick-lock couplings conforming to ISO 16028 standards, leak-free at the moment of disconnection.
Suitable for use in aggressive environments, and in general in all those applications where is important that there is no fluid leaking. The tightness of the coupling connection with the plug is ensured by a series of spheres that allow a longer lifetime, even when connections and disconnections are frequent. Available in size from 1/4" to 1 1/4".



Series GGLX

from page 5.326.1



Series of stainless in-line rotary joints. Configuration M/F. Used in the connection of two rotating elements, avoiding twisting. Available in size from 1/4" to 2".

Series GGAX

from page 5.327.1



Series of stainless 90° rotary joints. Configuration M/F. Used in the connection of two rotating elements, avoiding twisting. Available in size from 1/4" to 2".

Stainless Steel quick-lock couplings

Stainless Steel quick-lock couplings, series GXA

Main features

Series	Description	Symbol	Compliance
GXA	Double shut off quick-lock couplings. Sizes from 1/4" to 1". In AISI 316 Stainless Steel.	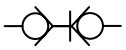	ISO 7241-1 A



Code key

Series	Configuration	Size
GXA	**1**	**012F**
GXA	1 = Coupling 2 = Stem	014F = 1/4" DN6 038F = 3/8" DN9 012F = 1/2" DN13 034F = 3/4" DN19 100F = 1" DN25

How to order

Series	Configuration	Size
GXA	**1**	**012F**

Notes

The options in the same grid are alternative to each others.

For standard materials see the table below.

For different configurations and dimensions see page 5.321.2

Technical data

Series	GXA				
Size	1/4"	3/8"	1/2"	3/4"	1"
	DN6	DN9	DN13	DN19	DN25
Pressure range	300 bar	250 bar			200 bar
Fluid	Compressed air, gases, acids and fluids				
Temperature range	-20°C ÷ +150°C				
Parallel threads	UNI - ISO 228/1 (BSP)				

Standard materials

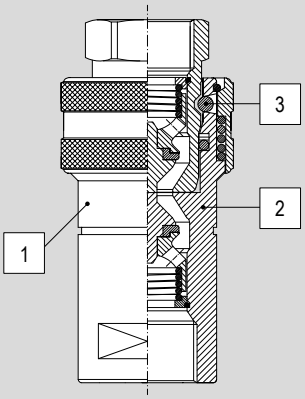

Position	Description	Material
1	Body	Stainless Steel AISI 316
2	Internal parts	Stainless Steel AISI 316
3	Seals	FKM

Standard dimensions

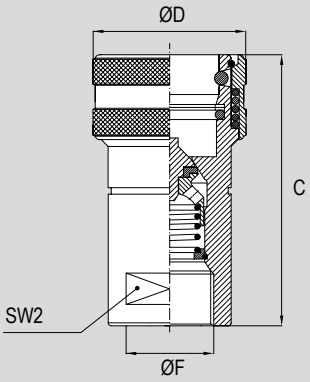

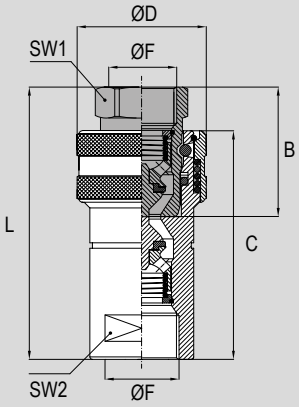

Type: **GXA1**

Code	Item	ØF (size)		B	C	ØD	L	SW1	SW2
570836	GXA1014F	G1/4”	DN 6	34	50	26	70	19	19
570838	GXA1038F	G3/8”	DN 9	40	57	30	80	22	22
570840	GXA1012F	G1/2”	DN 13	46	70	38	95	27	27
570842	GXA1034F	G3/4”	DN 19	53,5	81	48	108	32	34
570844	GXA1100F	G1”	DN 25	63	96	54	126	41	38

Standard dimensions

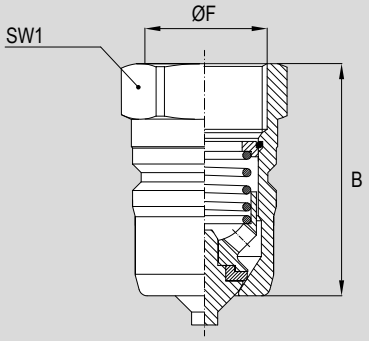

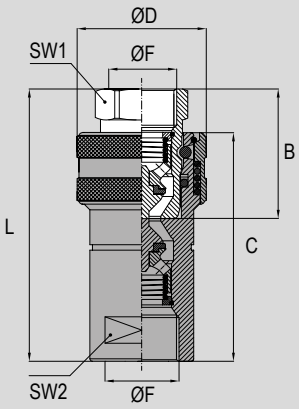

Type: **GXA2**

Code	Item	ØF (size)		B	C	ØD	L	SW1	SW2
570837	GXA2014F	G1/4”	DN 6	34	50	26	70	19	19
570839	GXA2038F	G3/8”	DN 9	40	57	30	80	22	22
570841	GXA2012F	G1/2”	DN 13	46	70	38	95	27	27
570843	GXA2034F	G3/4”	DN 19	53,5	81	48	108	32	34
570845	GXA2100F	G1”	DN 25	63	96	54	126	41	38

Stainless Steel quick-lock couplings

Stainless Steel quick-lock couplings, series GXF

Main features

Series	Description	Symbol	Compliance
GXF	Double shut off flat face quick-lock couplings, leak-free at the moment of disconnection. Sizes from 1/4" to 1 1/4". In AISI 316 Stainless Steel.		ISO 16028



Code key

Series	Configuration	Size
GXF	**1**	**012F**
GXF	1 = Coupling 2 = Stem	014F = 1/4" DN6 038F = 3/8" DN9 012F = 1/2" DN13 034F = 3/4" DN19 100F = 1" DN25 114F = 1 1/4" DN30

How to order

Series	Configuration	Size
GXF	**1**	**012F**

Notes

The options in the same grid are alternative to each others.

For standard materials see the table below.

For different configurations and dimensions see page 5.322.2

Technical data

Series	GXF					
Size	1/4"	3/8"	1/2"	3/4"	1"	1 1/4"
	DN6	DN9	DN13	DN19	DN25	DN30
Pressure range	300 bar	250 bar		200 bar	150 bar	100 bar
Fluid	Compressed air, gases, acids and fluids					
Temperature range	-20°C ÷ +150°C					
Parallel threads	UNI - ISO 228/1 (BSP)					

Standard materials

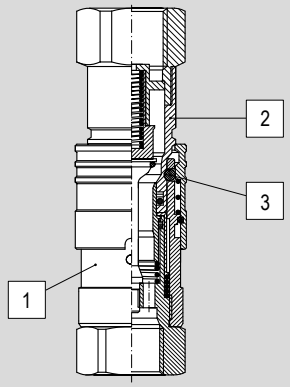

Position	Description	Material
1	Body	Stainless Steel AISI 316
2	Internal parts	Stainless Steel AISI 316
3	Seals	FKM

Standard dimensions

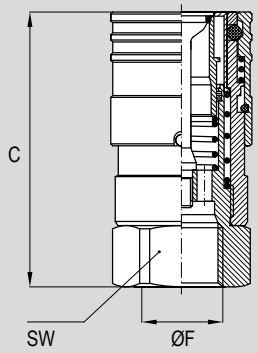

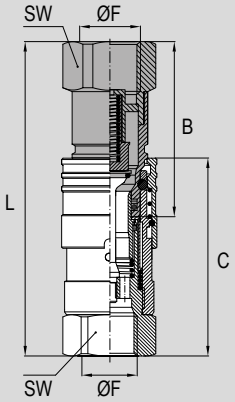

Type: **GXF1**

Code	Item	ØF (size)		B	C	L	SW
570846	GXF1014F	G1/4”	DN 6	48	48	86	22
570848	GXF1038F	G3/8”	DN 9	67	68	118	27
570850	GXF1012F	G1/2”	DN 13	68	74	125	32
570852	GXF1034F	G3/4”	DN 19	70	79	130	36
570854	GXF1100F	G1”	DN 25	82	93	153	45
570856	GXF1114F	G1 1/4”	DN 30	90	106	172,5	55

Standard dimensions

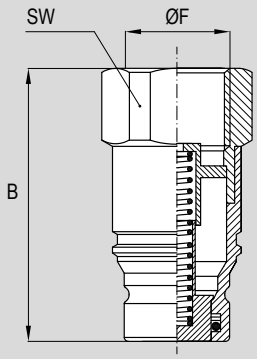

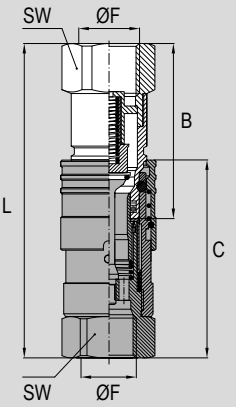

Type: **GXF2**

Code	Item	ØF (size)		B	C	L	SW
570847	GXF2014F	G1/4”	DN 6	48	48	86	22
570849	GXF2038F	G3/8”	DN 9	67	68	118	27
570851	GXF2012F	G1/2”	DN 13	68	74	125	32
570853	GXF2034F	G3/4”	DN 19	70	79	130	36
570855	GXF2100F	G1”	DN 25	82	93	153	45
570857	GXF2114F	G1 1/4”	DN 30	90	106	172,5	55

Stainless Steel quick-lock couplings

Stainless Steel in-line rotary joints, series GGLX

Main features

Series	Description
GGLX	In-line rotary joints in configuration M/F. Sizes from 1/4" to 2". In AISI 316 Stainless Steel.



Code key

Series	Size
GGLX	**012**

GGLX

- 014 = 1/4" DN6
- 038 = 3/8" DN9
- 012 = 1/2" DN13
- 034 = 3/4" DN19
- 100 = 1" DN25
- 114 = 1 1/4" DN30
- 112 = 1 1/2" DN40
- 200 = 2" DN50

How to order

Series	Size
GGLX	**012**

Notes

The options in the same grid are alternative to each others.

For standard materials see the table below.

For dimensions see page 5.326.2

Technical data

Series	GGLX							
Size	1/4"	3/8"	1/2"	3/4"	1"	1 1/4"	1 1/2"	2"
	DN6	DN9	DN13	DN19	DN25	DN30	DN40	DN50
Pressure range	300 bar			250 bar		180 bar	150 bar	
Fluid	Compressed air, gases, acids and fluids							
Temperature range	-20°C ÷ +150°C							
Configuration	Male/Female							
Rotation speed	10 turns/minute (maximum)							
Parallel threads	UNI - ISO 228/1 (BSP)							

Standard materials

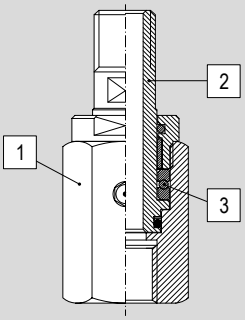

Position	Description	Material
1	Body	Stainless Steel AISI 316
2	Internal parts	Stainless Steel AISI 316
3	Seals	FKM

Standard dimensions

Type: **GGLX**

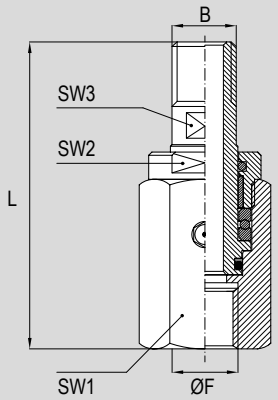

Code	Item	ØF (size)		B	L	SW1	SW2	SW3
570858	GGLX014	G1/4”	DN6	G1/4”	75	27	24	11
570859	GGLX038	G3/8”	DN9	G3/8”	88	34	30	14
570860	GGLX012	G1/2”	DN13	G1/2”	101	36	32	18
570861	GGLX034	G3/4”	DN19	G3/4”	110	46	40	24
570862	GGLX100	G1”	DN25	G1”	124	55	50	30
570863	GGLX114	G1 1/4”	DN30	G1 1/4”	129	60	55	38
570864	GGLX112	G1 1/2”	DN40	G1 1/2”	138	75	69	41
570865	GGLX200	G2”	DN50	G2”	149	85	80	55

Stainless Steel quick-lock couplings

Stainless Steel 90° rotary joints, series GGAX

Main features

Series	Description
GGAX	90° rotary joints in configuration M/F. Size from 1/4" to 2". In AISI 316 Stainless Steel.



Code key

Series	Size
GGAX	**012**

GGAX

- 014 = 1/4" DN6
- 038 = 3/8" DN9
- 012 = 1/2" DN13
- 034 = 3/4" DN19
- 100 = 1" DN25
- 114 = 1 1/4" DN30
- 112 = 1 1/2" DN40
- 200 = 2" DN50

How to order

Series	Size
GGAX	**012**

Notes

The options in the same grid are alternative to each others.

For standard materials see the table below.

For dimensions see page 5.327.2

Technical data

Series	GGAX							
Size	1/4"	3/8"	1/2"	3/4"	1"	1 1/4"	1 1/2"	2"
	DN6	DN9	DN13	DN19	DN25	DN30	DN40	DN50
Pressure range	350 bar	300 bar		250 bar		180 bar	150 bar	
Fluid	Compressed air, gases, acids and fluids							
Temperature range	-20°C ÷ +150°C							
Configuration	Male/Female							
Rotation speed	10 turns/minute (maximum)							
Parallel threads	UNI - ISO 228/1 (BSP)							

Standard materials

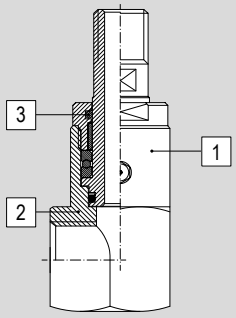

Position	Description	Material
1	Body	Stainless Steel AISI 316
2	Internal parts	Stainless Steel AISI 316
3	Seals	FKM

Standard dimensions

Type: **GGAX**
1/4"÷1"

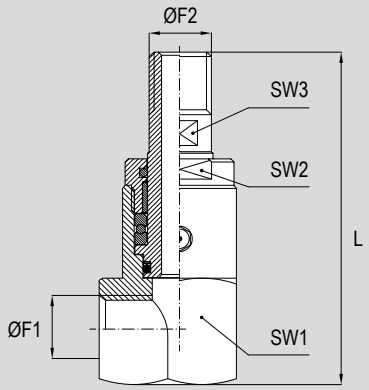

Code	Item	ØF1 (size)		ØF2	L	SW1	SW2	SW3
570866	GGAX014	G1/4"	DN6	G1/4"	78	32	21	11
570867	GGAX038	G3/8"	DN9	G3/8"	98	36	27	14
570868	GGAX012	G1/2"	DN13	G1/2"	106	46	32	18
570869	GGAX034	G3/4"	DN19	G3/4"	118	50	37	24
570870	GGAX100	G1"	DN25	G1"	142	60	46	30

Standard dimensions

Type: **GGAX**
1 1/4"÷2"

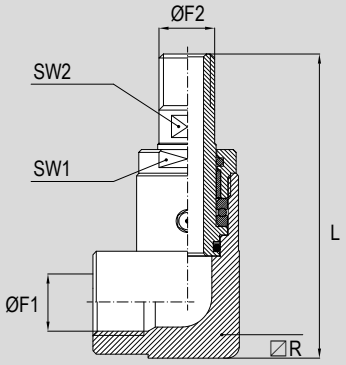

Code	Item	ØF1 (size)		ØF2	L	SW1	SW2	⍁R
570871	GGAX114	G1 1/4"	DN30	G1 1/4"	155	55	38	60
570872	GGAX112	G1 1/2"	DN40	G1 1/2"	170	70	41	75
570873	GGAX200	G2"	DN50	G2"	190	80	55	85

STAINLESS STEEL
air-reservoirs



Find out our
key products

- **Solution for most applications**
- **Easy and intuitive choice**
- **Excellent value for money**
- **Wide availability**
- **Fast delivery**

Main features and certifications

Stainless Steel air-reservoirs for compressed air and accessories, built according to 2014/68/EU Directive in the field of pressure equipment.
Supplied as standard in compliance to Reach and RoHS directives. On request, can be supplied according to 2014/34/EU ATEX Directive.

Series SBCX

from page 5.350.10



Series of stainless steel air-reservoirs for compressed air, available in sizes from 5 lt. to 24 lt.

Stainless Steel air-reservoirs
Series SBCX







Code key

Size	Series	Ports	/	ATEX version(1)
12	**SBCX**	**4**	**/**	

Size	Series	Ports	/	ATEX version(1)
5 = 5 lt. 12 = 12 lt. 24 = 24 lt.	SBCX	4 = 4 connections	ATEX	CE Ex II 2G Ex h IIC TX Gb II 2D Ex h IIIC TX°C Db

Notes

For standard materials see the table below.

(1) For ATEX versions, please consider that one connection is necessarily used for grounding. For further infomation on the ATEX 2014/34/EU Directive, on classifications and protections, see from page III.1

Warning: for safety use of air-reservoirs strictly follow the user manual provided with each product.

How to order

Size	Series	Ports
12	**SBCX**	**4**

How to order versione ATEX

Size	Series	Ports		ATEX version
12	**SBCX**	**4**	**/**	**ATEX**

Main features

Series	SBCX
Fluid	Compressed air
Pressure range	11 bar
Pressure range (hydrostatic test)	16,5 bar
Temperature range	-40°C ÷ +50°C
Parallel threads	UNI - ISO 228/1 (BSP)
Capacity	5 lt. ÷ 24 lt.
Ports number	4
Tolerance on dimensions*	±5 mm

*For dimensions see from page 5.350.13

Standard materials

Series	SBCX
Bottom	Stainless Steel AISI 304
Shell	Stainless Steel AISI 304
Socket joint	Stainless Steel AISI 304
External treatment	Polishing

Accessories

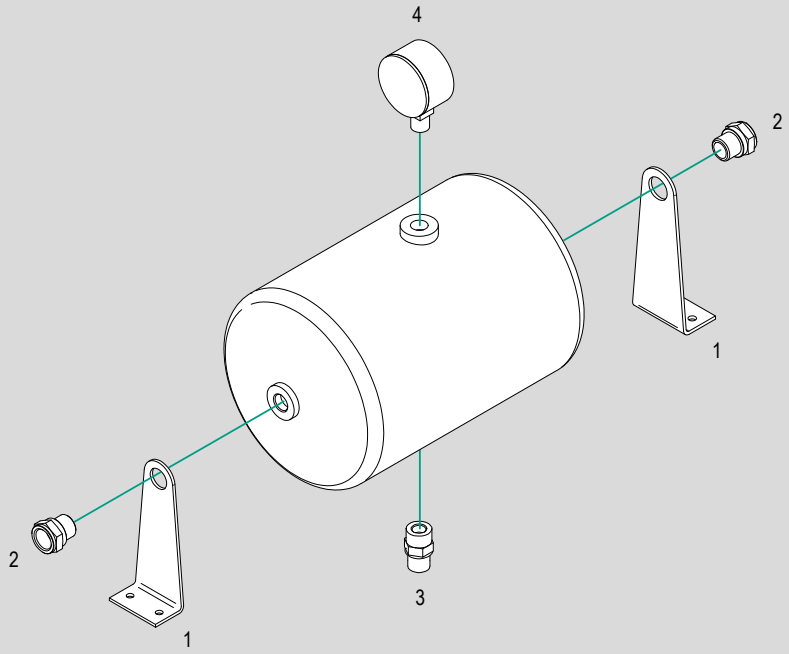

N.	Item	Description	Compliance	Matching		Code key and data sheet page
				5SBCX - 12SBCX	24SBCX	
1	STSBX	Mounting bracket	-	●	–	5.350.50
2	AX0041212	Bracket-tank connecting fitting	-	●	●	
3	AX..	Standard fitting	-	●	●	5.308.1
4	M..	Pressure-gauge	-	●	●	3.30.1

Key
● matching accessory; – not matching accessory

Stainless Steel air-reservoirs series SBCX

Series		Compliance	Symbol	Capacity	Parallel threads (BSP)	Ports	Data sheet and code page
						4	
5SBCX		Directive 2014/68/EU		5 lt.	1/2"	●	5.35.13
12SBCX		Directive 2014/68/EU		12 lt.	1/2"	●	5.35.14
24SBCX		Directive 2014/68/EU		24 lt.	1/2"	●	5.35.15

Key
● allowed matching; - not allowed matching

Stainless Steel air-reservoirs
Series SBCX - 5 lt.

Main features

Version	Symbol	Code	Item
Stainless Steel AISI 304 polished air-reservoir, built according 2014/68/EU Directive. Capacity 5 lt., with 4 ports.		050612	5SBCX4



5 lt.

Dimensions

2014/68/UE

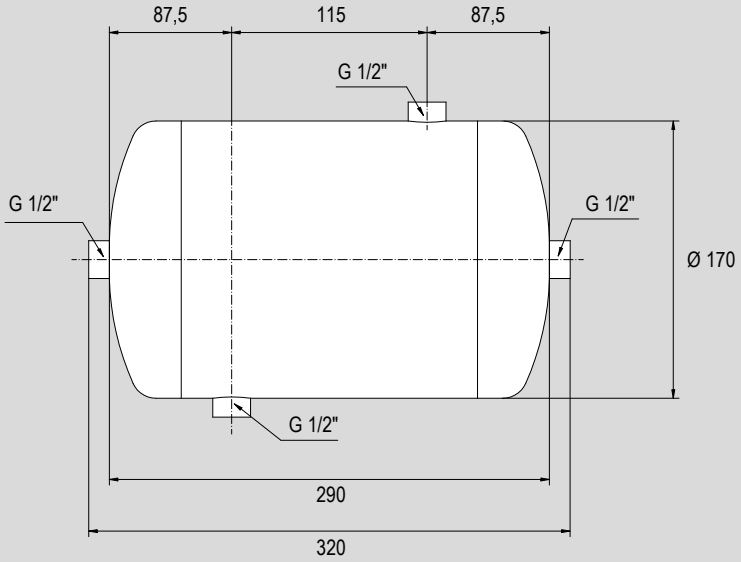

Stainless Steel air-reservoirs
Series SBCX - 12 lt.

Main features

Version	Symbol	Code	Item
Stainless Steel AISI 304 polished air-reservoir, built according 2014/68/EU Directive. Capacity 12 lt., with 4 ports.		050613	12SBCX4



12 lt.

Dimensions

2014/68/UE

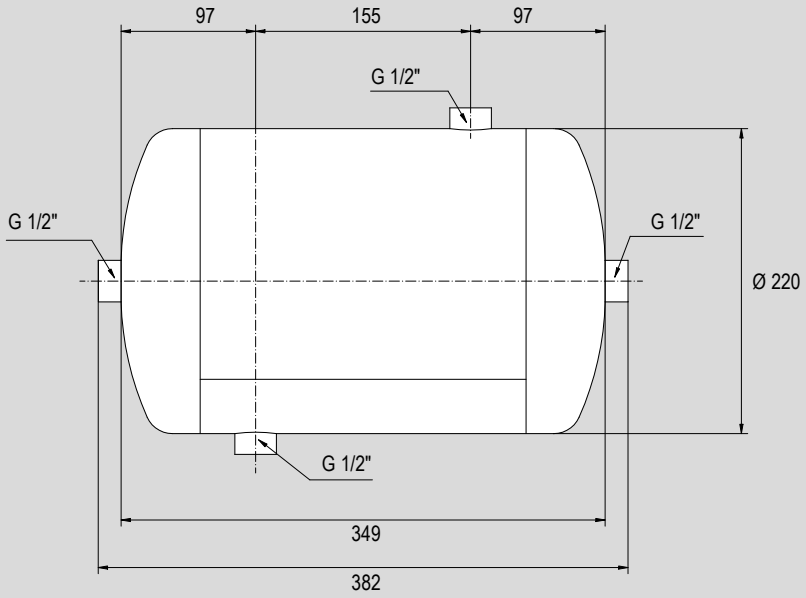

Stainless Steel air-reservoirs
Series SBCX - 24 lt.

Main features

Version	Symbol	Code	Item
Stainless Steel AISI 304 polished air-reservoir, built according 2014/68/EU Directive. Capacity 24 lt., with 4 ports.		050614	24SBCX4



24 lt.

Dimensions

2014/68/UE

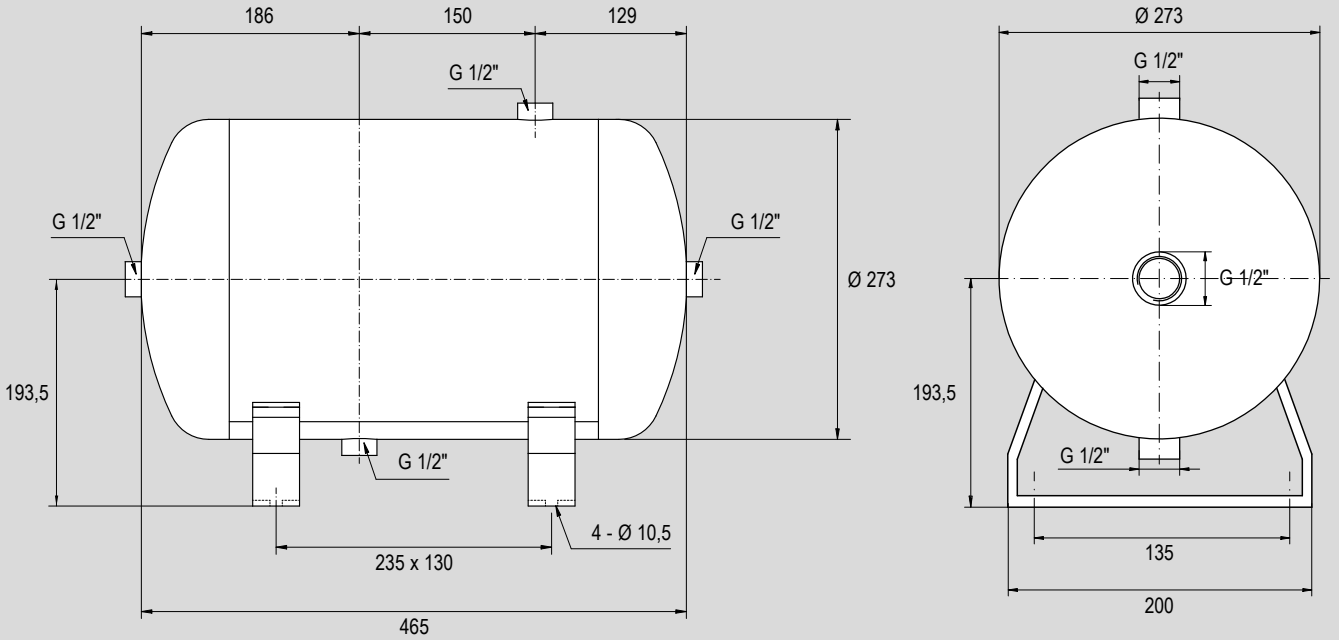

Stainless Steel air-reservoirs

Accessories for stainless steel air-reservoirs

Main features

Type	Description
STSBX	Mounting bracket in AISI 304 Stainless Steel. Mounting the bracket to the air-reservoir require the fitting type AX004, to be ordered separately, see below.



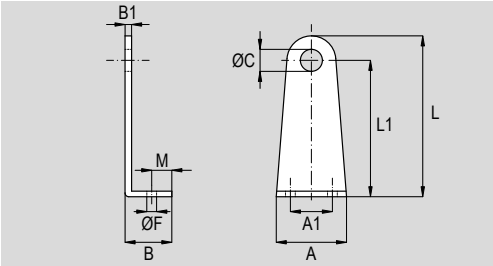

Dimensions

Code	Item	A	A1	B	B1	ØC	ØF	L	L1	M	Weight (g)
050628	STSBX	59	37	36	3	21	7	150	132	15,5	-

Main features

Type	Description
AX004	Bracket/Air-reservoir connecting fitting in AISI 316 Stainless Steel. For further infomation see from page 5.308.1



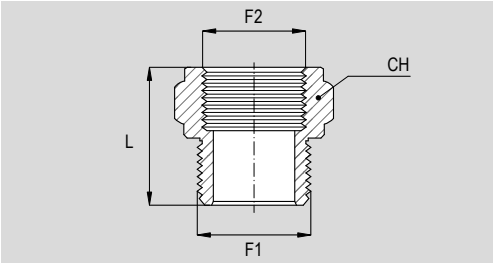

Dimensions

Code	Item	F1 (Thread 1)	F2 (Thread 2)	L	CH	Weight (g)
026259	AX004 12 12	R1/2"	G1/2"	40	24	-

Notes

STAINLESS STEEL
flow and exhaust regulators

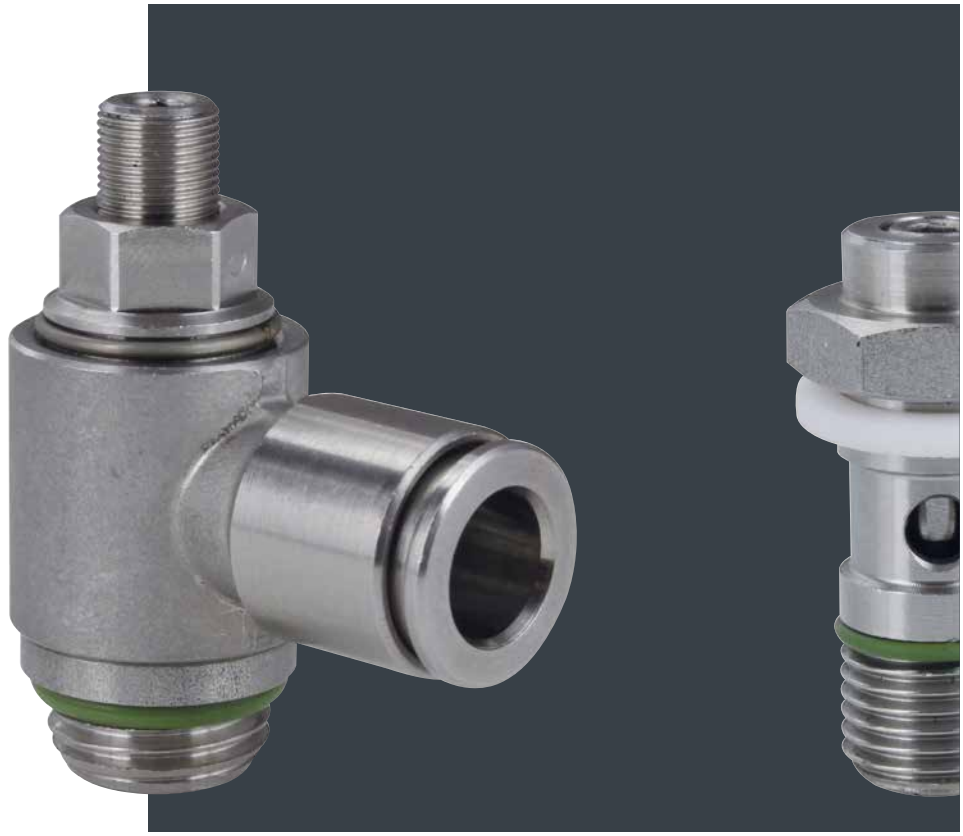

Find out our
key products

- **Solution for most applications**
- **Easy and intuitive choice**
- **Excellent value for money**
- **Wide availability**
- **Fast delivery**

Main features and certifications

Stainless Steel flow and exhaust regulators. Available in different functions, versions and threads.
Supplied conforming to Reach and RoHS directives. Lubricated with synthetic grease long lasting, fully composed by non-toxic elements conforming to FDA Directive section 21 CFR 178 about accidental contact with food (registered NSF H1).

Stainless Steel in-line flow regulators

from page 5.371.1



Series of stainless steel in-line flow regulators, available with uni-directional or bi-directional regulation.

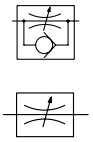

Stainless Steel flow regulators

from page 5.372.1



Series of stainless steel flow regulators,generally directly mounted on cylinder connections to control translation speed . Available in different functions: uni-directional with "out" adjustment, uni-directional with "in" adjustment and bi-directional with adjustment in both the directions. Use of two uni-directional "out" adjustment regulators is reccomended for the accurate control of the cylinder speed, as they act on the outgoing flow of the cylinder chambers, and don't interfere with the incoming flow to the chambers.

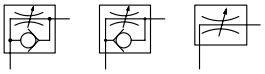

Stainless Steel silenced restrictors

from page 5.375.1



Series of stainless steel silenced exhaust restrictors, generally used to decrease the speed and thus the translation speed of the cylinders, are usually mounted on power valve outlets or quick exhaust valves. The main feature of these regulators is to include two functions in one component: flow regulation and silencing.

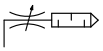

Stainless Steel flow and exhaust regulators

Stainless Steel in-line flow regulators



Code key

Series	Type	Thread 1	Thread 2
VX	**52**	**18**	**18**
VX	52	18 = 1/8"	18 = 1/8"
	53	14 = 1/4"	14 = 1/4"
		38 = 3/8"	38 = 3/8"
		12 = 1/2"	12 = 1/2"

How to order

Series	Type	Thread	Thread
VX	**52**	**18**	**18**

Notes

For standard materials see the table below.

For specific type see the following pages.

Technical data

Type	VX52	VX53
Fluid	Filtered compressed air with or without lubrication	
Pressure range	0,5 ÷ 10 bar	
Temperature range	-20°C ÷ +150°C	
Parallel threads	UNI - ISO 228 / 1 (BSP)	

Standard materials

Type	VX52	VX53
Body	Stainless Steel AISI 316 L	
Adjustment needle	Stainless Steel AISI 316 L	
Regulator	Stainless Steel AISI 316 L	
Knob	Stainless Steel AISI 316 L	
Nut	Stainless Steel AISI 316 L	
Seals	FKM	

Flow diagram — P = 6 bar, with ΔP 1 bar

Type: **VX52 - VX53**

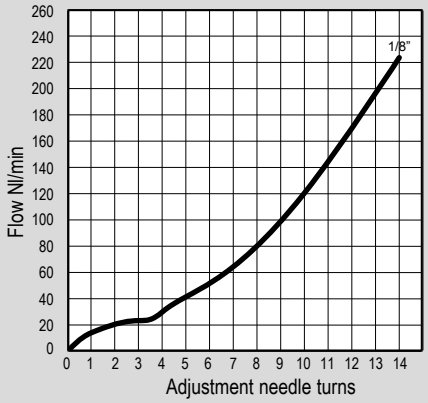

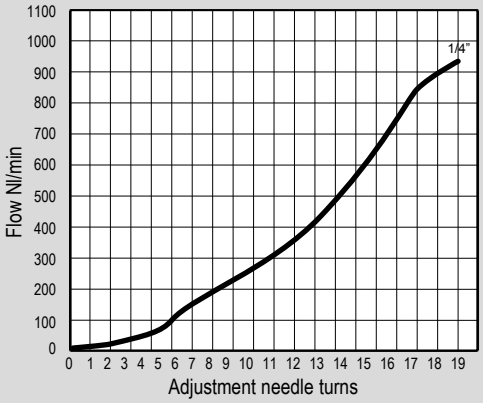

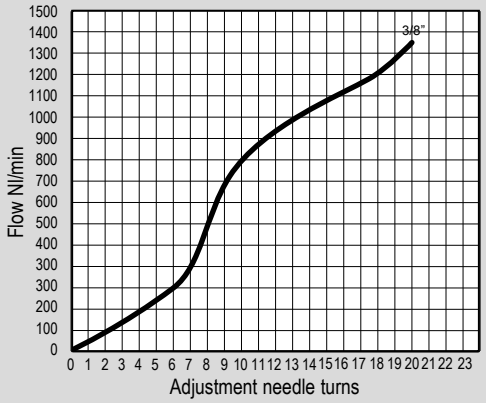

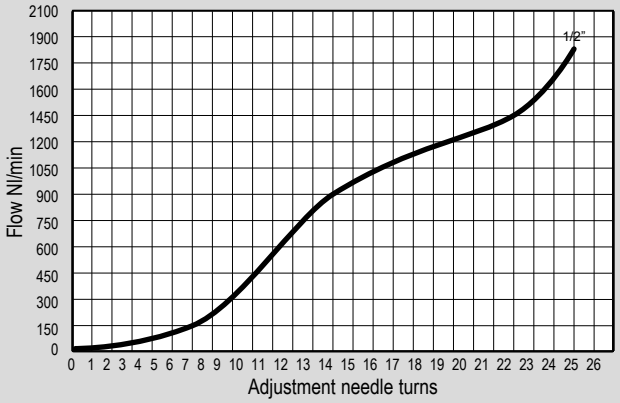

Stainless Steel flow and exhaust regulators

Stainless Steel in-line flow regulators

Main features

Type	Description	Function
VX52	Stainless Steel in-line uni-directional flow regulators. With female-female threads.	
VX53	Stainless Steel in-line bi-directional flow regulators. With female-female threads.	



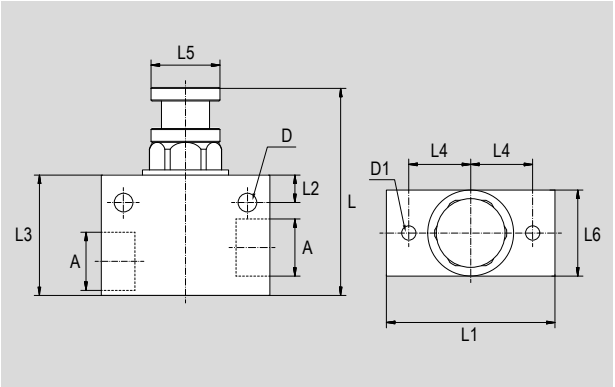

Dimensions

Code	Item	Symbol (Function)	A	L min	L max	L1	L2	L3	L4	L5	L6	ØD	D1	Weight (g)
030155	VX521818	 (uni-directional)	G1/8"	49	54	40	8	30	15	20	20	5,4	M5	178
030156	VX521414		G1/4"	49	54	40	8	30	15	20	20	5,4	M5	168
030146	VX523838		G3/8"	57	66	49	8	35	18	20	25	5,4	M5	310
030147	VX521212		G1/2"	57	66	49	8	35	18	20	25	5,4	M5	305
030157	VX531818	 (bi-directional)	G1/8"	49	54	40	8	30	15	20	20	5,4	M5	178
030158	VX531414		G1/4"	49	54	40	8	30	15	20	20	5,4	M5	168
030144	VX533838		G3/8"	57	66	49	8	35	18	20	25	5,4	M5	310
030148	VX531212		G1/2"	57	66	49	8	35	18	20	25	5,4	M5	305





Code key

Series	Type (1)	Tube (1)	Thread (1)	Function (2)
VX	**18**	**06**	**18**	**C**
VX	15, 18	04 = Ø 4 06 = Ø 6 08 = Ø 8 10 = Ø 10	18 = 1/8" 14 = 1/4" 38 = 3/8"	C = "Out" adjustment (For cylinders) V = "In" adjustment (For valves) B = Bi-directional adjustment

How to order

Series	Type	Tube	Thread	Function
VX	**18**	**06**	**18**	**C**

Notes

The options in the same grid are alternative to each others. For standard materials see the table below.

(1) For matching between flow regulator types, tube diameters and threads, see the table on page 5.372.3; for specific type see the following pages.

(2) For the function differences see table at page 5.372.2

Technical data

Type	VX15	VX18
Fluid	Filtered compressed air with or without lubrication	
Pressure range	0 ÷ 10 bar	
Temperature range	-20°C ÷ +150°C	
Flow	See page 5.372.2	
Parallel threads	UNI - ISO 228 / 1 (BSP)	
Tubes	PVDF, PTFE	
Tubes tolerance	± 0,07 mm	

Standard materials

Type	VX15	VX18
Body	Stainless Steel AISI 316L	
Adjustment needle	Stainless Steel AISI 316L	
Bush	Stainless Steel AISI 316L	
Fitting	-	series RX (see page 5.302.10)
Washer	PTFE	-
Seals	FKM	

Flow diagram

P = 6 bar, with ΔP 1 bar

Type: **VX15**

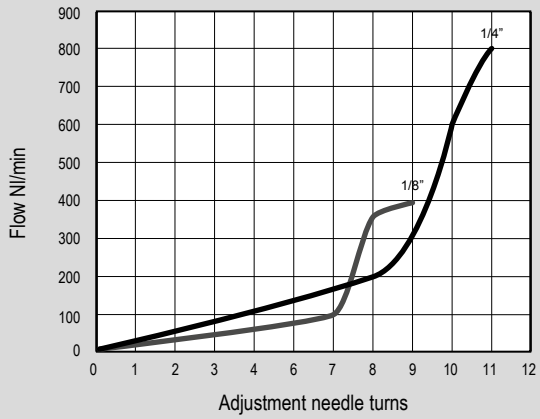

Type: **VX18**

Tube: Ø **4x2,5**

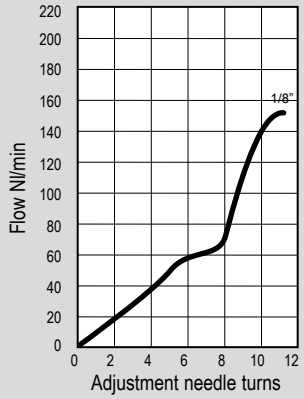

Tube: Ø **6x4**

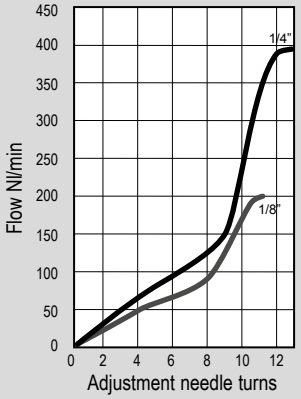

Tube: Ø **8x6**

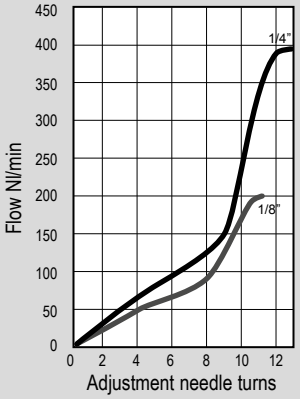

Tube: Ø **10x8**

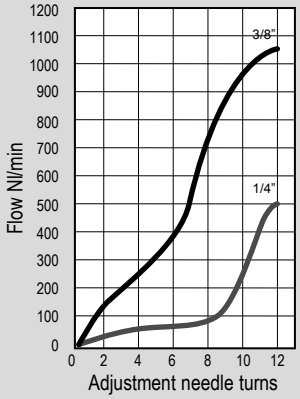

Functions

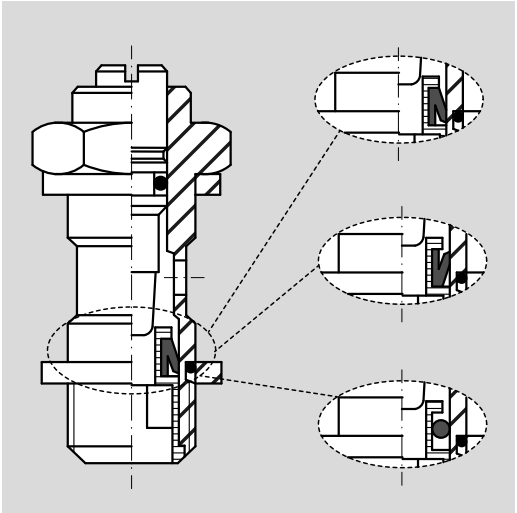

C		For cylinders. Function uni-directional with "out" adjustment
V		For valves. Function uni-directional with "in" adjustment
B		Bi-directional. Function bi-directional with adjustment in both directions

Flow regulators

Type			Functions	Parallel threads (BSP)	For tube Ø mm	Data sheet and code page
VX15	Banjo bolt with screwdriver adjustment		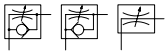	1/8", 1/4"	-	5.372.4
VX18	Swivel BSP with screwdriver adjustment and push-in fitting		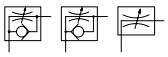	1/8", 1/4", 3/8"	4, 6, 8, 10	5.372.5

Matching thread/tube

Tube diameter (external)	Thread		
	G1/8"	G1/4"	G3/8"
Ø 4 mm	●	-	-
Ø 6 mm	●	●	-
Ø 8 mm	●	●	-
Ø 10 mm	-	●	●

Key
● allowed matching; - not allowed matching

Stainless Steel flow and exhaust regulators

Stainless Steel flow regulators type VX15

Main features

Type	Description	Function
VX15..C	Banjo bolt with screwdriver adjustment. For cylinders. In Stainless Steel.	
VX15..V	Banjo bolt with screwdriver adjustment. For valves. In Stainless Steel.	
VX15..B	Banjo bolt with screwdriver adjustment. Bi-directional. In Stainless Steel.	



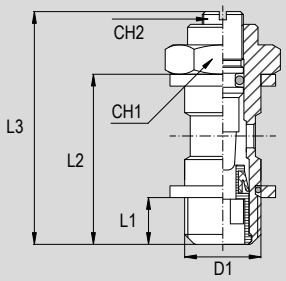

Dimensions

Code	Item	Symbol (Function)	D1	L1	L2	L3 (max)	CH1	CH2	Weight (g)
024035	VX150018C	 (for cylinders)	G1/8"	5,1	22,1	32,9	14	2,5	18,3
024036	VX150014C		G1/4"	6,4	27,4	41,8	17	3	34,5
024039	VX150018V	 (for valves)	G1/8"	5,1	22,1	32,9	14	2,5	18,3
024040	VX150014V		G1/4"	6,4	27,4	41,8	17	3	34,5
024037	VX150018B	 (bi-directional)	G1/8"	5,1	22,1	32,9	14	2,5	18,3
024038	VX150014B		G1/4"	6,4	27,4	41,8	17	3	34,5

Matching with banjo series RX



Code	Item	For thread	Tube ext.Ø
020982	RX350418	1/8"	Øe 4
020981	RX350618	1/8"	Øe 6
020973	RX350614	1/4"	Øe 6
020965	RX350818	1/8"	Øe 8
020945	RX350814	1/4"	Øe 8
020990	RX351014	1/4"	Øe 10

Stainless Steel flow and exhaust regulators

Stainless Steel flow regulators type VX18

Main features

Type	Description	Function
VX18..C	Swivel BSP with screwdriver adjustment and push-in fitting. For cylinders. In Stainless Steel.	
VX18..V	Swivel BSP with screwdriver adjustment and push-in fitting. For valves. In Stainless Steel.	
VX18..B	Swivel BSP with screwdriver adjustment and push-in fitting. Bi-directional. In Stainless Steel.	



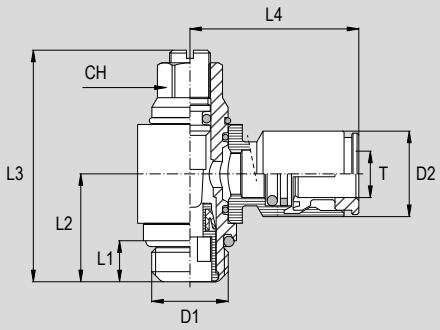

Dimensions

Code	Item	Symbol (Function)	T (Øe tube)	D1	D2	L1	L2	L3 (max)	L4	CH	Weight (g)
024232	VX180418C	(for cylinders)	4	G1/8"	9	5,1	15	32,9	20,5	9	26
024233	VX180618C		6	G1/8"	12	5,1	15	32,9	22,5	9	28,8
024234	VX180614C		6	G1/4"	12	6,4	17,4	39	24	10	43,1
024235	VX180818C		8	G1/8"	14	5,1	15	32,9	23	9	29,5
024236	VX180814C		8	G1/4"	14	6,4	17,4	39	25	10	45,4
024237	VX181014C		10	G1/4"	16	6,4	17,4	39	27	10	47
024238	VX181038C		10	G3/8"	16	7	20	50	26	14	85,2
024239	VX180418V	(for valves)	4	G1/8"	9	5,1	15	32,9	20,5	9	26
024240	VX180618V		6	G1/8"	12	5,1	15	32,9	22,5	9	28,8
024241	VX180614V		6	G1/4"	12	6,4	17,4	39	24	10	43,1
024242	VX180818V		8	G1/8"	14	5,1	15	32,9	23	9	29,5
024243	VX180814V		8	G1/4"	14	6,4	17,4	39	25	10	45,4
024244	VX181014V		10	G1/4"	16	6,4	17,4	39	27	10	47
024245	VX181038V		10	G3/8"	16	7	20	50	26	14	85,2
024246	VX180418B	(bi-directional)	4	G1/8"	9	5,1	15	32,9	20,5	9	26
024247	VX180618B		6	G1/8"	12	5,1	15	32,9	22,5	9	28,8
024248	VX180614B		6	G1/4"	12	6,4	17,4	39	24	10	43,1
024249	VX180818B		8	G1/8"	14	5,1	15	32,9	23	9	29,5
024250	VX180814B		8	G1/4"	14	6,4	17,4	39	25	10	45,4
024251	VX181014B		10	G1/4"	16	6,4	17,4	39	27	10	47
024252	VX181038B		10	G3/8"	16	7	20	50	26	14	85,2

Stainless Steel flow and exhaust regulators

Stainless Steel silenced restrictors type AVRX



Code key

Type	Thread
AVRX	**14**

Type
AVRX

Thread
18 = 1/8"
14 = 1/4"
38 = 3/8"
12 = 1/2"
34 = 3/4"
01 = 1"

How to order

Type	Thread
AVRX	**14**

Notes

For standard materials see the table below.

Technical data

Type	AVRX
Fluid	Compressed air
Pressure range	0 ÷ 10 bar
Temperature range	-40°C ÷ +150°C
Parallel threads	UNI - ISO 228 / 1 (BSP)

Standard materials

Type	AVRX
Body	Stainless Steel AISI 316
Filtering cartridge	Stainless Steel AISI 316

Stainless Steel flow and exhaust regulators

Stainless Steel silenced restrictors type AVRX

Main features

Type	Description	Function
AVRX	Silenced exhaust restrictors with screwdriver adjustment. In Stainless Steel.	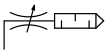



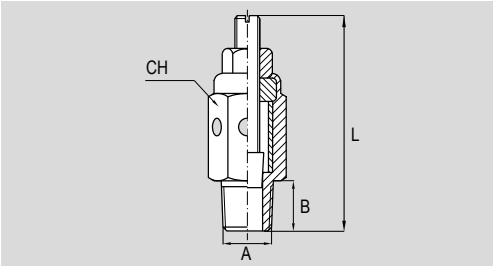

Dimensions

Code	Item	Symbol (Function)	A	B	L min	L max	CH	Weight (g)
023518	AVRX18	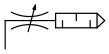	G1/8"	6,5	31	38	13	-
023519	AVRX14		G1/4"	9	37	48	14	-
023520	AVRX38		G3/8"	10,5	38	51	17	-
023527	AVRX12		G1/2"	10,5	43	54	22	-
023528	AVRX34		G3/4"	12	48	60	27	-
023529	AVRX01		G1"	15,5	53	69	34	-

STAINLESS STEEL

accessories with integrated function



Find out our
key products

- **Solution for most applications**
- **Easy and intuitive choice**
- **Excellent value for money**
- **Wide availability**
- **Fast delivery**

Main features and certifications

Stainless Steel accessories with integrated function. Available in different versions, functions, and threads.
Supplied as standard in compliance to Reach and RoHS directives. Lubricated with synthetic grease long lasting, fully composed by non-toxic elements conforming to FDA Directive section 21 CFR 178 about accidental contact with food (registered NSF H1).

Stainless Steel stop valves

from page 5.384.1



Series of stainless steel stop valves. Available in version uni-directional, in size from G1/8" to G1/2", with integrated recessed manual override and female banjo.



Code key

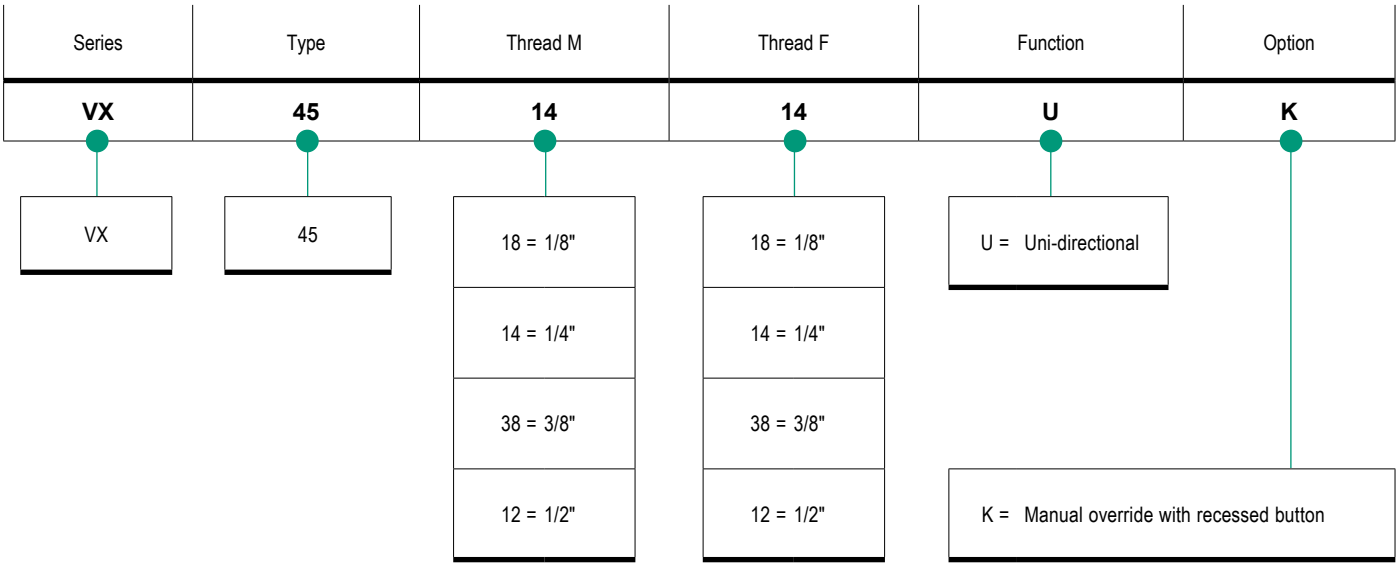

How to order

Series	Type	Thread M	Thread F	Function	Option
VX	45	14	14	U	K

Notes

For standard materials see the following page.

Main features

Type	Description	Symbol
VX45	Uni-directional stop valve. In AISI 316L Stainless Steel.	



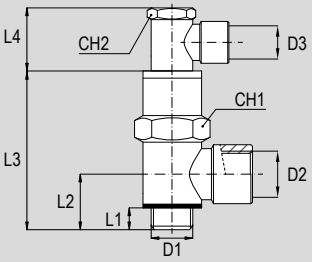

Dimensions

Code	Item	Symbol	D1	D2	D3	L1	L2	L3	L4	CH1	CH2	Weight (g)
024580	VX451818UK		G1/8"	G1/8"	M5x0,8	6	15,5	42	20,5	13	8	-
024581	VX451414UK		G1/4"	G1/4"	M5x0,8	8	18,5	46,5	20,5	17	8	-
024582	VX453838UK		G3/8"	G3/8"	G1/8"	9	21	53,5	19	21	14	-
024583	VX451212UK		G1/2"	G1/2"	G1/8"	10,5	24,5	61,5	19	25	14	-

Technical data

Type	VX45			
Size	1/8"	1/4"	3/8"	1/2"
Fluid	Filtered compressed air with or without lubrication			
Pressure range	0 ÷ 10 bar			
Piloting pressure range	See page 5.384.2			
Temperature range	-20°C ÷ +150°C			
Parallel threads	UNI - ISO 228 / 1 (BSP)			
Function	See page 5.384.2			
Flow at 6 bar with ΔP 1 bar	170 Nl/min	345 Nl/min	700 Nl/min	1.050 Nl/min

Standard materials

Type	VX45
Body	Stainless Steel AISI 316 L
Piston	Stainless Steel AISI 304
Spring	Stainless Steel AISI 302
Washer	PTFE
Seals	FKM

Function

Type VX45 

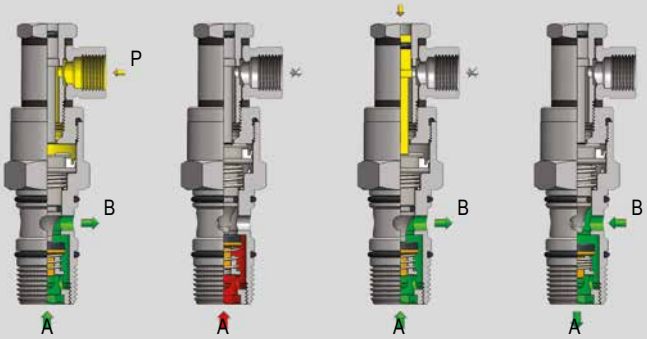

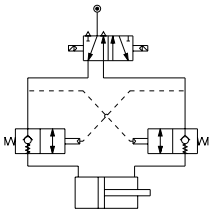

Series of stop valves available in uni-directional version. When mounted in pairs on a cylinder, they block the movement in the event of a sudden drop in piloting pressure.
By means of the manual release device is possible to manually reset the piston stroke.

Piloting pressure in function of feeding pressure



Notes

STAINLESS STEEL
silencers



Find out our
key products

- **Solution for most applications**
- **Easy and intuitive choice**
- **Excellent value for money**
- **Wide availability**
- **Fast delivery**

Main features and certifications

Stainless steel silencers. Available in different types and threads. To apply at the exhaust to reduce noise.
Supplied as standard in compliance to Reach and RoHS directives.

Stainless Steel sintered silencers

from page 5.392.10



Series of stainless steel sintered silencers. Available in different shapes and types. Sizes from M5 to 1".



Stainless Steel silencers
Sintered



Code key

Type	Size (1)	Option
AFEX	**18**	**NPT**

AFEX
AFEX
AEX
AEPX
AERX

Size (1)
M5 = M5x0,8
18 = 1/8"
14 = 1/4"
38 = 3/8"
12 = 1/2"
34 = 3/4"
01 = 1"

Option
NPT (2) = NPT thread (according to ANSI B 1.20.1)

How to order

Type	Size
AFEX	**18**

How to order with option

Type	Size	Option
AFEX	**18**	**NPT**

Notes

For standard materials see the data sheet of each single component.

(1) For matching between type and thread, see table at page 5.392.11; for specific type see further pages.

(2) Available in size from 1/8" to 1"

Sintered silencers

Type			Parallel threads (BSP)	Metric threads	Data sheet and code page
AFEX	Silencer with stainless steel mesh filtering element and nipple in stainless steel.		1/8", 1/4", 3/8", 1/2", 3/4", 1"	M5x0,8	5.392.12
AEX	Silencer with sintered stainless steel truncated cone filtering element and nipple in stainless steel.		1/8", 1/4", 3/8", 1/2", 3/4", 1"	M5x0,8	5.392.13
AEPX	Silencer with stainless steel flat filtering element and nipple in stainless steel.		1/8", 1/4", 3/8", 1/2", 3/4", 1"	M5x0,8	5.392.14
AERX	Silencer with stainless steel microstretched mesh filtering element and nipple in stainless steel.		1/8", 1/4", 3/8", 1/2", 3/4", 1"	M5x0,8	5.392.15

Stainless Steel silencers
Sintered, series AFEX

Main features

Type	Description	Symbol
AFEX	Silencer with stainless steel mesh filtering element and nipple in stainless steel.	



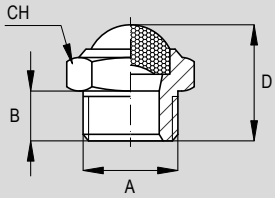

Dimensions

Code	Item	Symbol	A	B	CH	D	Weight (g)
010327	AFEXM5		M5x0,8	4	8	8	-
010321	AFEX18		G1/8”	6	13	15	-
010322	AFEX14		G1/4”	8	16	18	-
010345	AFEX38		G3/8”	8	19	19	-
010346	AFEX12		G1/2”	9	24	22	-
010330	AFEX34		G3/4”	10	30	25	-
010329	AFEX01		G1”	12	36	30	-

Technical data

Type	AFEX
Fluid	Compressed air
Pressure range	0 ÷ 10 bar
Temperature range	-40°C ÷ +150°C
Parallel threads	UNI - ISO 228 / 1 (BSP)
Metric threads	UNI EN ISO 965-1

Standard materials

Type	AFEX
Nipple	Stainless Steel AISI 304
Filtering element	Stainless Steel AISI 304

Stainless Steel silencers
Sintered, series AEX

Main features

Type	Description	Symbol
AEX	Silencer with sintered stainless steel truncated cone filtering element and nipple in stainless steel.	



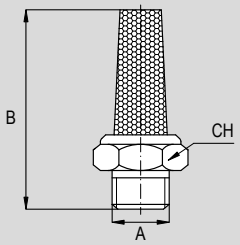

Dimensions

Code	Item	Symbol	A	B	CH	Weight (g)
010358	AEXM5		M5x0,8	21,5	9	-
010351	AEX18		G1/8”	28,5	12	-
010352	AEX14		G1/4”	33	15	-
011033	AEX38		G3/8”	40	19	-
010353	AEX12		G1/2”	48	23	-
010354	AEX34		G3/4”	58,5	30	-
010355	AEX01		G1”	71	36	-

Technical data

Type	AEX
Fluid	Compressed air
Pressure range	0 ÷ 10 bar
Temperature range	-40°C ÷ +150°C
Parallel threads	UNI - ISO 228 / 1 (BSP)
Metric threads	UNI EN ISO 965-1

Standard materials

Type	AEX
Nipple	Stainless Steel AISI 316
Filtering element	Stainless Steel AISI 316

Stainless Steel silencers
Sintered, series AEPX

Main features

Type	Description	Symbol
AEPX	Silencer with stainless steel flat filtering element and nipple in stainless steel.	



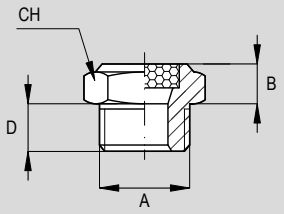

Dimensions

Code	Item	Symbol	A	B	CH	D	Weight (g)
010360	AEPXM5		M5x0,8	4,5	8	5	-
010361	AEPX18		G1/8”	6,2	12	7	-
010362	AEPX14		G1/4”	6,2	15	9	-
010363	AEPX38		G3/8”	6,7	19	9	-
010364	AEPX12		G1/2”	9,2	23	9,5	-
010365	AEPX34		G3/4”	9,7	30	11	-
010366	AEPX01		G1”	10,7	36	15	-

Technical data

Type	AEPX
Fluid	Compressed air
Pressure range	0 ÷ 10 bar
Temperature range	-40°C ÷ +150°C
Parallel threads	UNI - ISO 228 / 1 (BSP)
Metric threads	UNI EN ISO 965-1

Standard materials

Type	AEPX
Nipple	Stainless Steel AISI 316
Filtering element	Stainless Steel AISI 316

Stainless Steel silencers
Sintered, series AERX

Main features

Type	Description	Symbol
AERX	Silencer with stainless steel microstretched mesh filtering element and nipple in stainless steel.	



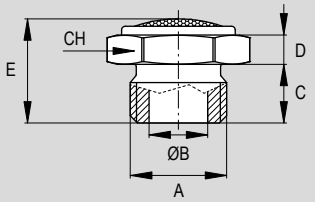

Dimensions

Code	Item	Symbol	A	B	C	D	E	CH	Weight (g)
010378	AERXM5		M5x0,8	6	8	4	15	14	-
010379	AERX18		G1/8”	8	8	4	14	17	-
010380	AERX14		G1/4”	12	8	10	18	22	-
010381	AERX38		G3/8”	15	12	7	22	27	-
010382	AERX12		G1/2”	20	15	9	27	32	-
010383	AERX34		G3/4”	26	18	11	34	41	-
010384	AERX01		G1”	34	36	15	29	29	-

Technical data

Type	AERX
Fluid	Compressed air
Pressure range	0 ÷ 10 bar
Temperature range	-40°C ÷ +150°C
Parallel threads	UNI - ISO 228 / 1 (BSP)
Metric threads	UNI EN ISO 965-1

Standard materials

Type	AERX
Nipple	Stainless Steel AISI 316 L
Filtering element	Stainless Steel AISI 316 L

Notes

Notes



A.P.I. S.r.l.

Via Cornaggia, 107
22076 Mozzate (CO) – Italy

Phone +39 0331.82.35.11
Fax +39 0331.82.34.80
info@api-pneumatic.com

api-pneumatic.com